MIAMI-DADE

BUILDING CODE COMPLIANCE OFFICE (BCCO)
PRODUCT CONTROL DIVISION

MIAMI-DADE COUNTY, FLORIDA
METRO-DADE FLAGLER BUILDING
140 WEST FLAGLER STREET, SUITE 1603
MIAMI, FLORIDA 33130-1563
(305) 375-2901 FAX (305) 375-2908

NOTICE OF ACCEPTANCE (NOA)

Ocean Shutters Manufacturing, Inc.
4900 N.E. 11th Avenue
Fort Lauderdale, FL 33334

SCOPE:

This NOA is being issued under the applicable rules and regulations governing the use of construction materials. The documentation submitted has been reviewed by Miami-Dade County Product Control Division and accepted by the Board of Rules and Appeals (BORA) to be used in Miami Dade County and other areas where allowed by the Authority Having Jurisdiction (AHJ).

This NOA shall not be valid after the expiration date stated below. The Miami-Dade County Product Control Division (In Miami Dade County) and/or the AHJ (in areas other than Miami Dade County) reserve the right to have this product or material tested for quality assurance purposes. If this product or material fails to perform in the accepted manner, the manufacturer will incur the expense of such testing and the AHJ may immediately revoke, modify, or suspend the use of such product or material within their jurisdiction. BORA reserves the right to revoke this acceptance, if it is determined by Miami-Dade County Product Control Division that this product or material fails to meet the requirements of the applicable building code.

This product is approved as described herein, and has been designed to comply with the High Velocity Hurricane Zone of the Florida Building Code.

DESCRIPTION: 0.0511" Aluminum Storm Panels Shutter

APPROVAL DOCUMENT: Drawing No. 00-393, titled "0.0511 Aluminum Storm Panel", sheets 1 through 5 of 5, prepared by V.J. Knezevich, P.E., dated 05/03/02, bearing the Miami-Dade County Product Control Revision stamp with the Notice of Acceptance number and expiration date by the Miami-Dade County Product Control Division.

MISSILE IMPACT RATING: Large and Small Missile Impact

LABELING: Each unit shall bear a permanent label with the manufacturer's name or logo, city, state and following statement: "Miami-Dade County Product Control Approved", unless otherwise noted herein.

RENEWAL of this NOA shall be considered after a renewal application has been filed and there has been no change in the applicable building code negatively affecting the performance of this product.

TERMINATION of this NOA will occur after the expiration date or if there has been a revision or change in the materials, use, and/or manufacture of the product or process. Misuse of this NOA as an endorsement of any product, for sales, advertising or any other purposes shall automatically terminate this NOA. Failure to comply with any section of this NOA shall be cause for termination and removal of NOA.

ADVERTISEMENT: The NOA number preceded by the words Miami-Dade County, Florida, and followed by the expiration date may be displayed in advertising literature. If any portion of the NOA is displayed, then it shall be done in its entirety.

INSPECTION: A copy of this entire NOA shall be provided to the user by the manufacturer or its distributors and shall be available for inspection at the job site at the request of the Building Official.

This NOA **revises NOA #01-0516.15** and, consists of this page 1 as well as approval document mentioned above. The submitted documentation was reviewed by **Raul Rodriguez**

PRODUCT CONTROL ACCEPTED

NOA No 02-0410.02
Expiration Date: August 16, 2006
Approval Date: May 07, 2002

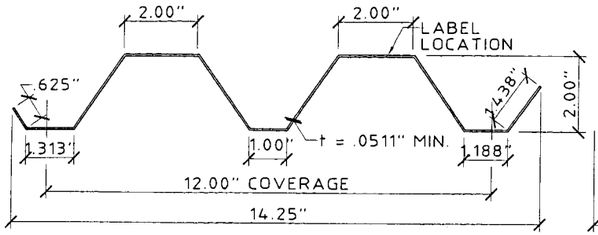

1 0.0511" ALUMINUM STORM PANEL
SCALE: 3" = 1' - 0"

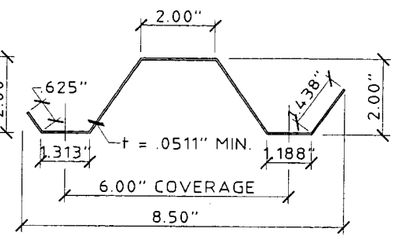

2 0.0511" ALUMINUM HALF STORM PANEL
SCALE: 3" = 1' - 0"

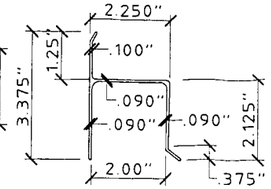

3 "h" HEADER
SCALE: 3" = 1' - 0"

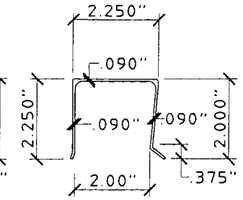

4 "U" HEADER
SCALE: 3" = 1' - 0"

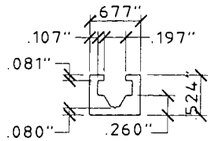

5 PRE-STUCCO C-TRACK
SCALE : HALF SIZE

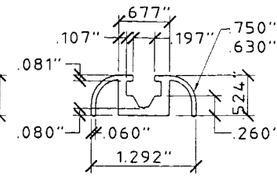

5a C-TRACK (FINISH)
SCALE : HALF SIZE

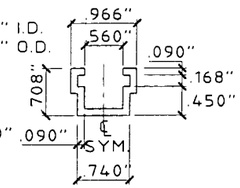

6 SLIDE TRACK
SCALE : HALF SIZE

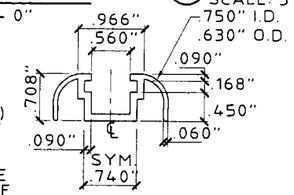

6a SLIDE TRACK (FINISH)
SCALE : HALF SIZE

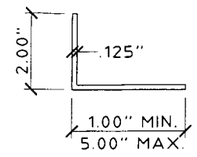

7 ANGLE
SCALE: 3" = 1' - 0"

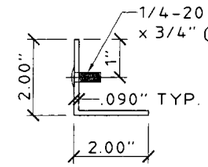

8 STUD ANGLE
SCALE: 3" = 1' - 0"

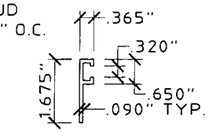

9 F-TRACK
SCALE: 3" = 1' - 0"

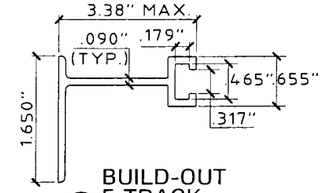

10 BUILD-OUT F-TRACK
SCALE : HALF SIZE

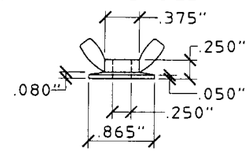

(ZAMAC 3 ALLOY)
11 WASHERED WINGNUT
SCALE : HALF SIZE

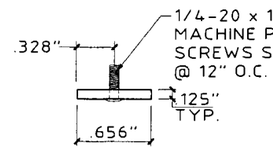

12 STUDDED STRAP
(SLIDER, USE WITH 6 OR 6a)
SCALE : HALF SIZE

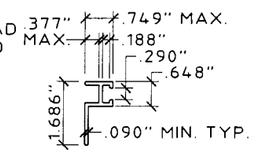

13 BF-TRACK
SCALE: 3" = 1' - 0"

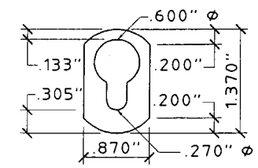

14 KEYHOLE WASHER (OPTIONAL)
SCALE : HALF SIZE

GENERAL NOTES:

1. THESE APPROVAL DOCUMENTS REPRESENT A SHUTTER SYSTEM ANALYZED WITH THE PROVISION SET FOR THE ISSUANCE OF A NOTICE OF ACCEPTANCE (NOA) BY MIAMI-DADE COUNTY PRODUCT CONTROL DIVISION FOR THE HIGH VELOCITY HURRICANE ZONE (HVHZ) OF THE FLORIDA BUILDING CODE.
2. TO VERIFY THAT THE ANCHORS AS TESTED, ARE NOT OVERSTRESSED IN THESE APPROVAL DOCUMENTS, A 33% INCREASE IN ALLOWABLE STRESS WAS USED IN THE FASTENER ANALYSIS.
3. DETERMINE THE POSITIVE AND NEGATIVE DESIGN LOADS TO USE WHEN REFERENCING THESE DOCUMENTS IN ACCORDANCE WITH THE GOVERNING CODE AND GOVERNING WIND VELOCITY. FOR WIND LOAD CALCULATIONS IN ACCORDANCE WITH ASCE 7-98, A DIRECTIONALITY FACTOR OF Kd =1.0 SHALL BE USED.
4. THESE APPROVAL DOCUMENTS ARE GENERIC AND DO NOT INCLUDE INFORMATION FOR SITE-SPECIFIC APPLICATION OF THIS SHUTTER SYSTEM.
5. THESE APPROVAL DOCUMENTS COMPLY WITH CHAPTER 61G15-23 OF THE FLORIDA ADMINISTRATIVE CODE.
6. THESE APPROVAL DOCUMENTS, ARE SUITABLE TO BE APPLIED BY THE CONTRACTOR PROVIDED THE CONTRACTOR DOES NOT DEVIATE FROM THE CONDITIONS DETAILED HEREIN AND THE CONTRACTOR VERIFIES THAT THE EXISTING STRUCTURE DOES NOT DEVIATE IN EITHER FORM OR MATERIAL FROM THE STRUCTURAL SUBSTRATES DETAILED HEREIN.
7. ANY MODIFICATIONS OR ADDITIONS TO THESE APPROVAL DOCUMENTS WILL VOID THE APPROVAL DOCUMENTS.
8. WHEN THE SITE CONDITIONS DEVIATE FROM THESE APPROVAL DOCUMENTS, THE BUILDING OFFICIAL MAY ELECT ONE OF THE FOLLOWING OPTIONS:
   A) REQUIRE THAT SITE SPECIFIC DOCUMENTS BE PREPARED, SIGNED, DATED AND SEALED BY A LICENSED ENGINEER OR REGISTERED ARCHITECT, WHICH DETAIL AND JUSTIFY THE DEVIATION. SAID DOCUMENTS SHALL BE SUBMITTED TO THE PRODUCT ENGINEER FOR REVIEW AS A CONDITION TO THE BUILDING OFFICIAL GRANTING HIS/HER APPROVAL.
   B) REQUIRE THAT A ONE-TIME SITE SPECIFIC APPROVAL BE APPLIED FOR AND SECURED FROM THE MIAMI-DADE COUNTY PRODUCT CONTROL DIVISION

   WHEN THE SITE CONDITION DEVIATIONS OCCUR WITHIN THE HIGH VELOCITY HURRICANE ZONE AREAS ONLY OPTION "B" SHALL BE ACCEPTED BY THE BUILDING OFFICIAL.
9. PRODUCT MARKINGS SHALL BE WITHIN 12" OF ONE END OF THE PANEL WITH A MIN. OF ONE MARKING PER PANEL, AND SHALL BE LABELED AS FOLLOWS:
   OCEAN SHUTTER MFG., INC.
   FT. LAUDERDALE , FLORIDA
   MIAMI-DADE COUNTY PRODUCT CONTROL APPROVED
10. STORM PANELS SHALL BE 3004-H34 OR 5052-H34 ALUMINUM ALLOY WITH Fy = 35,990 P.S.I., 0.0511" THICK. ALL EXTRUSIONS SHALL BE 6063-T6 ALUMINUM ALLOY, U.O.N.
11. ALL BOLTS AND WASHERS SHALL BE GALVANIZED OR STAINLESS STEEL WITH A MINIMUM TENSILE STRENGTH OF 60 K.S.I.
12. TOP & BOTTOM DETAILS SHOWN MAY BE INTERCHANGED AS FIELD CONDITIONS DICTATE. PANELS MAY BE MOUNTED HORIZONTALLY WHERE APPLICABLE, EXCEPT FOR "h" AND "U" HEADER MOUNTING CONDITIONS.

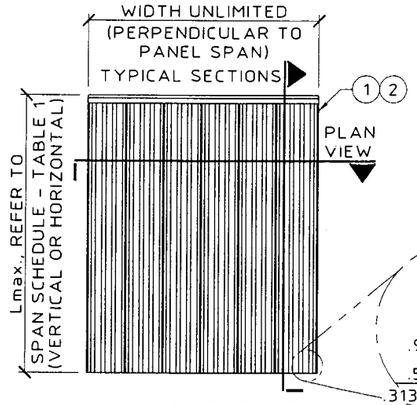

A PANEL ELEVATION
SCALE: 1/4" = 1' - 0"

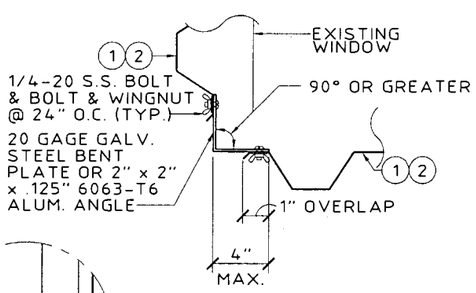

B CORNER CLOSURE DETAIL
SCALE: 1-1/2" = 1' - 0"

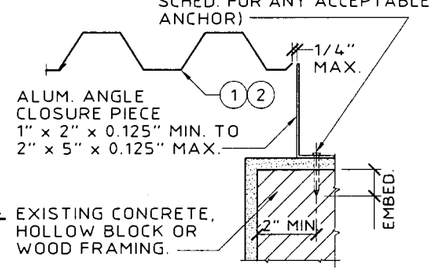

D BUILD-OUT MOUNT CLOSURE DETAIL
SCALE: 1-1/2" = 1' - 0"

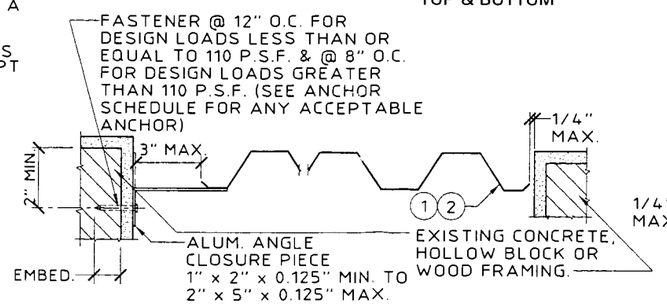

E TRAP MOUNT CLOSURE DETAIL
SCALE: 1-1/2" = 1' - 0"

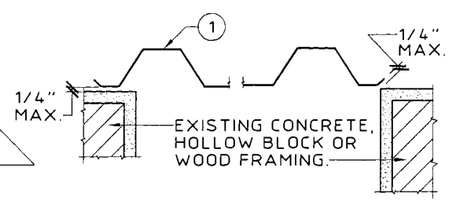

F WALL MOUNT CLOSURE DETAIL
SCALE: 1-1/2" = 1' - 0"

PRODUCT REVISED
as complying with the Florida
Buiding Code
Acceptance No 02-0410.02
Expiration Date 08/16/06
By
Miami Dade Product Control
Division

KNEZEVICH & ASSOCIATES, INC.
CONSULTING ENGINEERS • PRODUCT TESTING
1260 N. UNIVERSITY DRIVE, SUITE 180 • FORT LAUDERDALE, FL 33322
TEL: (954) 382-2800 • FAX: (954) 382-2989 • FLORIDA COA #3205
WEBSITE: WWW.KNEZEVICH.COM • E-MAIL: KA@KNEZEVICH.COM

COPYRIGHT © 2002 KNEZEVICH & ASSOCIATES, INC.

0.0511" ALUMINUM STORM PANEL

Ocean Shutters
4900 N.E. 11th AVE.
FT. LAUDERDALE, FL 33334
(954) 489-9797
MANUFACTURING COMPANY, INC.

V.J. KNEZEVICH
PROFESSIONAL ENGINEER
Fl License No. PE 0010983

MAY 03 2002

revisions

no	date	by	description
1	07/18/01	AS	COUNTY COMMENTS
2	04/04/02	JP	NEW GENERAL NOTES
3	04/17/02	OLB	COUNTY COMMENTS
4	04/26/02	OLB	COUNTY COMMENTS
5	05/03/02	OLB	COUNTY COMMENTS

date 04/10/01
scale AS NOTED
drawn by AV
design by OLB
checked by VJK
drawing no. 00-393
sheet 1 of 5

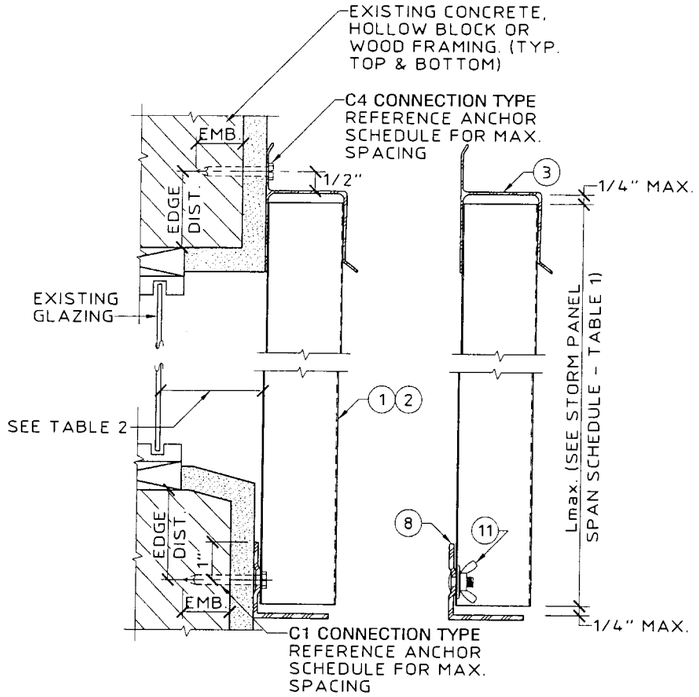

G WALL MOUNT SECTION
SCALE: 3" = 1' - 0"

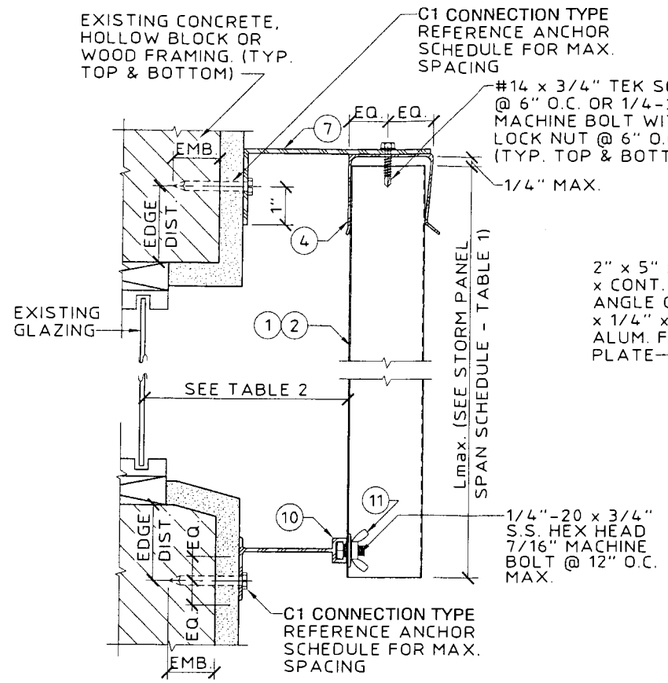

H BUILD-OUT MOUNT SECTION
SCALE: 3" = 1' - 0"

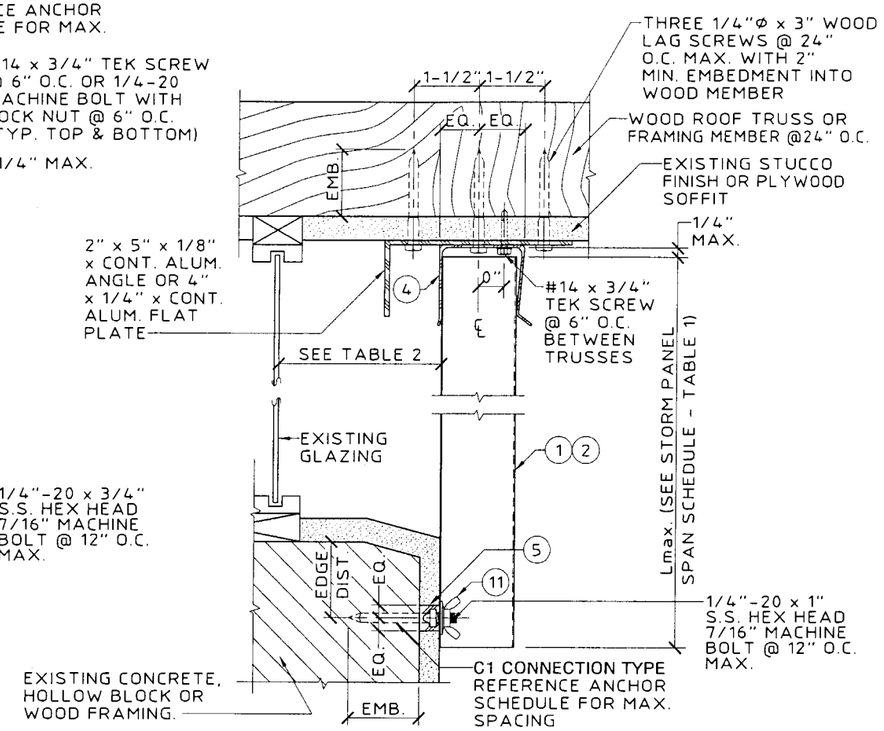

J CEILING / PRE-STUCCO TRACK
SCALE: 3" = 1' - 0"

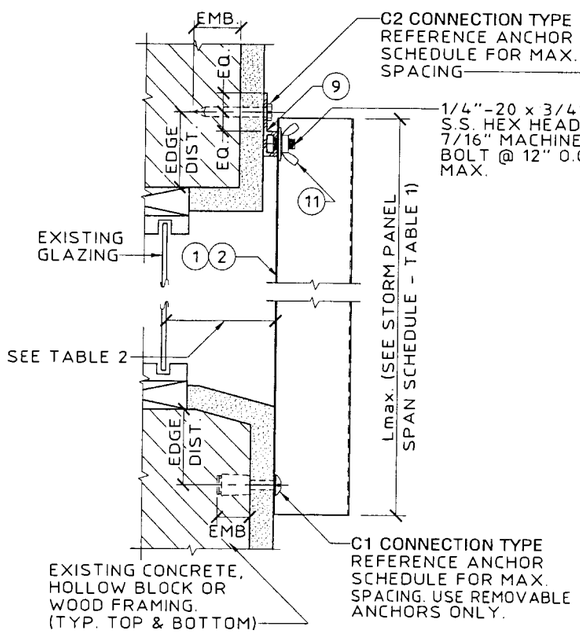

K "F" TRACK/DIRECT MOUNT SECTION
SCALE: 3" = 1' - 0"

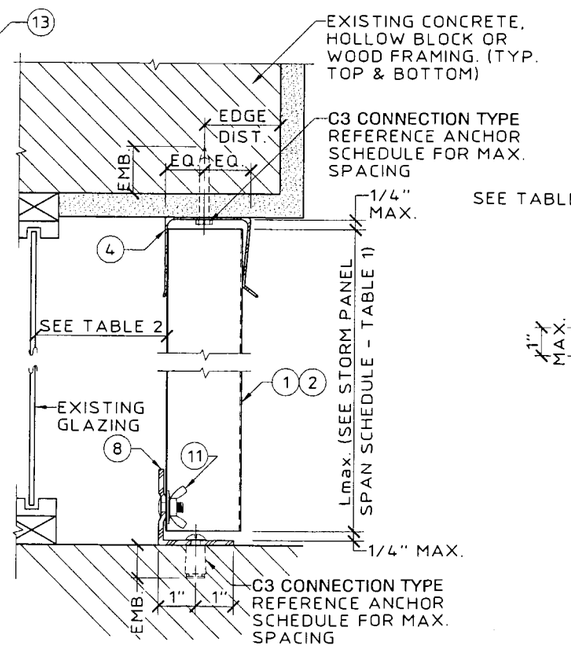

L CEILING / FLOOR MOUNT SECTION
SCALE: 3" = 1' - 0"

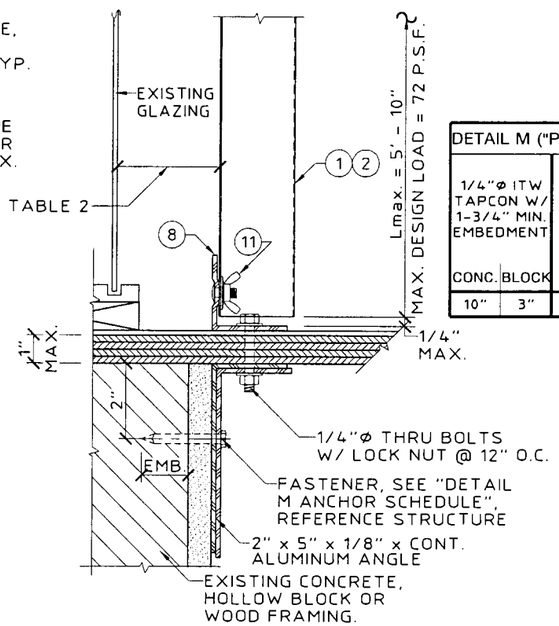

M "PASS THRU" SECTION
SCALE: 3" = 1' - 0"

DETAIL M ("PASS THRU" SEC.) ANCHOR SCHEDULE				
1/4"Φ ITW TAPCON W/ 1-3/4" MIN. EMBEDMENT		1/4"Φ POWERS CALK-IN W/ 7/8" EMBEDMENT & 1/4-20 STAINLESS STEEL MACHINE SCREW		1/4"Φ WOOD LAG SCREW W/ MINIMUM 1-3/4" PENETRATION SHEAR PARALLEL OR PERPENDICULAR TO WOOD GRAIN
CONC.	BLOCK	CONC.	BLOCK	WOOD
10"	3"	10"	4"	12"

PRODUCT REVISED
as complying with the Florida Buiding Code
Acceptance No. 02-0410.02
Expiration Date 08/16/06
By
Miami Dade Product Control Division

05/03/02 09:35

KNEZEVICH & ASSOCIATES, INC.
CONSULTING ENGINEERS • PRODUCT TESTING
1260 N. UNIVERSITY DRIVE, SUITE 180 • FORT LAUDERDALE, FL 33322
TEL: (954) 382-2800 • FAX: (954) 382-2989 • FLORIDA COA #3205
WEBSITE: WWW.KNEZEVICH.COM • E-MAIL: KA@KNEZEVICH.COM
COPYRIGHT © 2002 KNEZEVICH & ASSOCIATES, INC.

O.05 11"
ALUMINUM STORM PANEL

Ocean Shutters
4900 N.E. 11th AVE.
FT. LAUDERDALE, FL 33334
(954) 489-9797

V.J. KNEZEVICH
PROFESSIONAL ENGINEER
FL License No. PE 0010983

MAY 0 3 2002

revisions

no	date	by	description
1	07/18/01	AS	COUNTY COMMENTS
2	04/04/02	JP	NEW GENERAL NOTES
3	04/17/02	DLB	COUNTY COMMENTS
4	04/26/02	DLB	COUNTY COMMENTS
5	05/03/02	DLB	COUNTY COMMENTS

date 04/10/01
scale AS NOTED
drawn by AV
design by DLB
checked by VJK
drawing no. 00-393
sheet 2 of 5

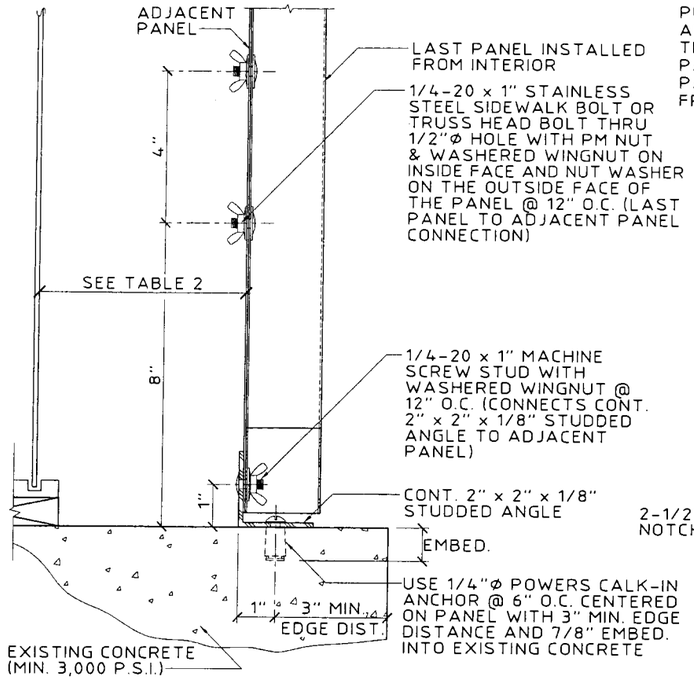

(MAX. PANEL HEIGHT = 8' - 0" AND MAX. DESIGN LOAD = ± 62 P.S.F.)

(N) OPTIONAL INTERIOR FASTENING DETAIL
SCALE: 3" = 1' - 0"

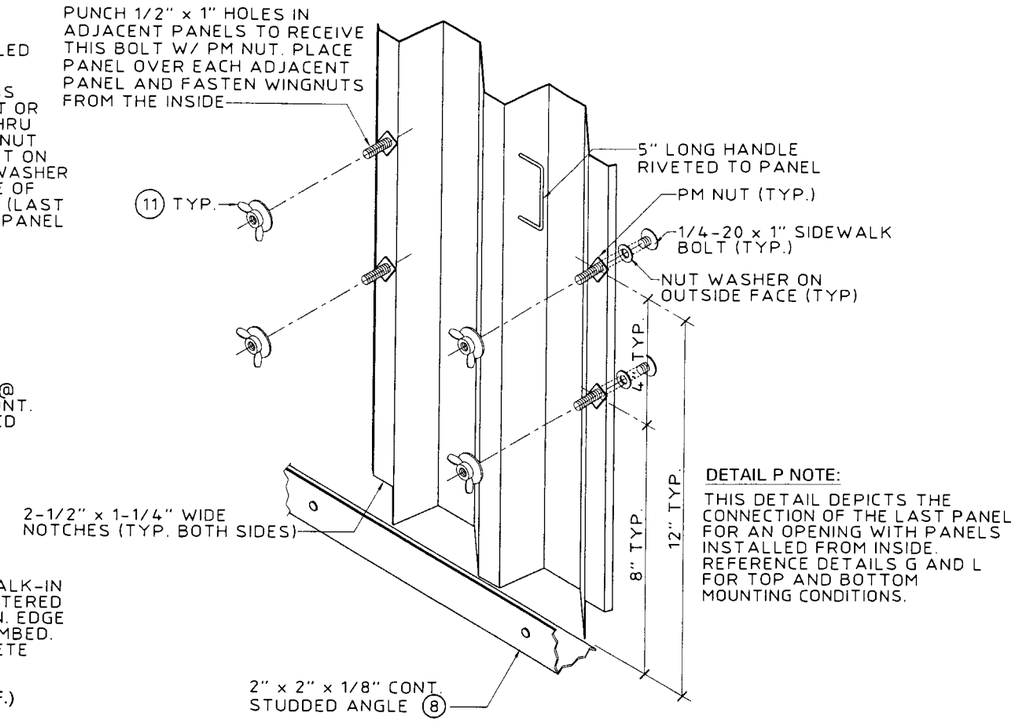

DETAIL P NOTE:

THIS DETAIL DEPICTS THE CONNECTION OF THE LAST PANEL FOR AN OPENING WITH PANELS INSTALLED FROM INSIDE. REFERENCE DETAILS G AND L FOR TOP AND BOTTOM MOUNTING CONDITIONS.

(P) OPTIONAL INTERIOR FASTENING DETAIL (ISOMETRIC)
N.T.S.

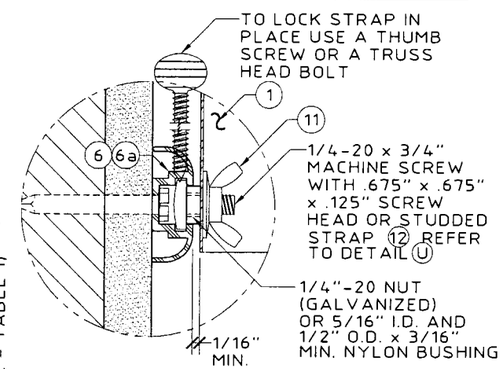

(T) C-TRACK ASSEMBLY - (BLOW UP)
SCALE: HALF SIZE

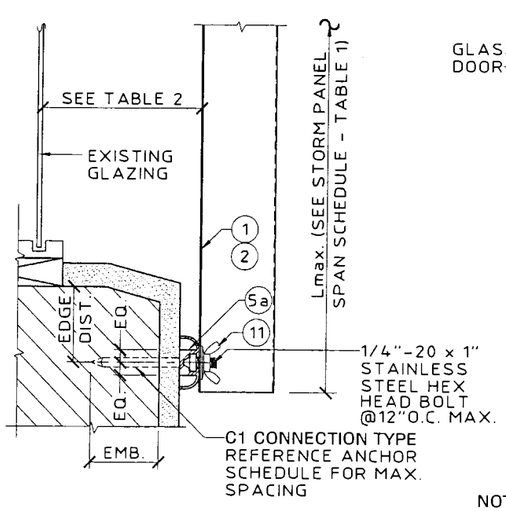

(R) C-TRACK (FINISH) ASSEMBLY
SCALE: 3" = 1' - 0"

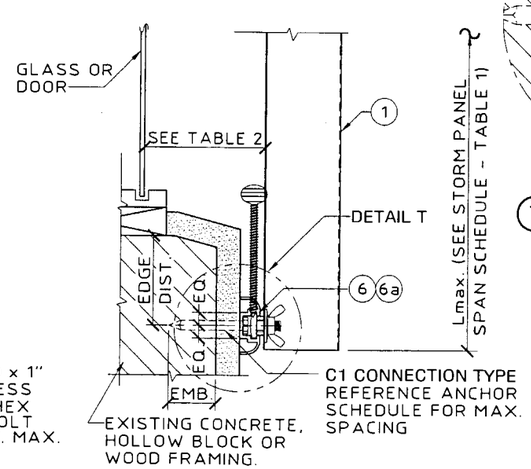

NOTE: USE OF DETAIL SHALL BE IN CONJUNCTION WITH AN " h " HEADER OR " U " HEADER TOP MOUNT

(S) C-TRACK ASSEMBLY - INSIDE MOUNT
SCALE: 3" = 1' - 0"

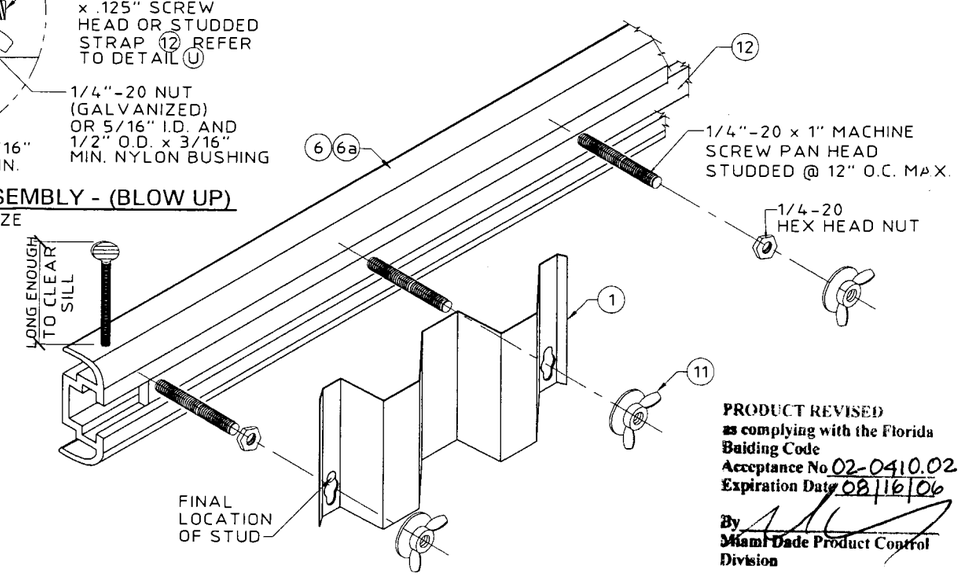

PRODUCT REVISED
as complying with the Florida Building Code
Acceptance No. 02-0410.02
Expiration Date 08/16/06
By
Miami-Dade Product Control Division

(U) STUDDED STRAP ASSEMBLY (ISOMETRIC VIEW)
N.T.S.

KNEZEVICH & ASSOCIATES, INC.
CONSULTING ENGINEERS • PRODUCT TESTING
1260 N. UNIVERSITY DRIVE, SUITE 180 • FORT LAUDERDALE, FL 33322
TEL: (954) 382-2800 • FAX: (954) 382-2989 • FLORIDA COA #3205
WEBSITE: WWW.KNEZEVICH.COM • E-MAIL: KA@KNEZEVICH.COM

COPYRIGHT © 2002 KNEZEVICH & ASSOCIATES, INC.

0.0511" ALUMINUM STORM PANEL

4900 N.E. 11th AVE.
FT. LAUDERDALE, FL 33334
(954) 489-9797
Ocean Shutters MANUFACTURING, INC.

V.J. KNEZEVICH
PROFESSIONAL ENGINEER
FL License No. PE 0010983

MAY 03 2002

revisions

no	date	by	description
1	07/18/01	AS	COUNTY COMMENTS
2	04/04/02	JP	NEW GENERAL NOTE
3	04/17/02	DLB	COUNTY COMMENTS
4	04/26/02	DLB	COUNTY COMMENTS
5	05/03/02	DLB	COUNTY COMMENTS

date 04/10/01	
scale AS NOTED	drawn by AV
design by DLB	checked by VJK
drawing no. 00-393	
sheet 3 of 5	

05/03/02 09:36

ANCHOR SCHEDULE

FASTENER MAX. SPACING (IN.) REQ'D FOR VARIOUS DESIGN LOADS AND SPANS

EXISTING STRUCTURE	ANCHOR TYPE	LOAD (W) P.S.F. MAX (SEE NOTE 1)	MIN. 3/4" EDGE DISTANCE											
			SPANS UP TO 5' -6" (SEE NOTE 1)				SPANS UP TO 8' - 8" (SEE NOTE 1)				SPANS UP TO 10' - 5" (SEE NOTE 1)			
			CONNECTION TYPE (SEE NOTE 3)				CONNECTION TYPE (SEE NOTE 3)				CONNECTION TYPE (SEE NOTE 3)			
			C1	C2	C3	C4	C1	C2	C3	C4	C1	C2	C3	C4
WOOD	3/16"Φ PHILLIPS HEAD OR #10G WOOD SCREW W/ MIN. 1-1/2" PENETRATION SHEAR PARALLEL OR PERP. TO WOOD GRAIN. USE WITH (5) AND (5A) ONLY. (1-3/4")	48.0	12				12				11			
		62.0	12				10				9			
		72.0	12				9				7			
		92.0	11				7				7			
		200.0	7				7				7			
	1/4"Φ x MIN. 2-1/2" LONG LAG SCREW W/ MIN. 1-3/4" EMBED. PERPENDICULAR OR PARALLEL TO WOOD GRAIN (1-3/4")	48.0	12	12	11	12	12	12	7	12	12	12	6	12
		62.0	12	12	9	12	12	12	5	12	12	12	4	7
		72.0	12	12	7	12	12	12	5	8	12	12	4	5
		92.0	12	12	6	12	12	12	3	5	12	12	3	5
		200.0	12	12	3	5	12	12	3	5	12	12	3	5
	1/4"Φ ELCO MALE/ FEMALE "PANELMATE" W/ 1-7/8 MIN. EMBEDMENT & 1/4-20 MACHINE SCREW WITH NUT (*)	48.0	12	12	12	12	12	12	12	12	12	12	10	12
		62.0	12	12	12	12	12	12	10	12	12	12	8	8
		72.0	12	12	12	12	12	12	8	9	12	12	7	6
		92.0	12	12	10	12	12	12	6	6	12	12	6	6
		200.0	12	12	6	6	12	12	6	6	12	12	6	6
	7/16"Φ WOOD BUSHING W/ 5/8" MIN. EMBEDMENT & 1/4-20 STAINLESS STEEL MACHINE SCREW (*)	48.0	12	12		12	10	10		10	8	8		5
		62.0	12	12		12	8	8		4	6	6		
		72.0	11	11		11	7	7			5	5		
		92.0	8	8		4	5	5			5	5		
		200.0	5	5			5	5			5	5		

ANCHOR NOTES:

1. SPANS AND LOADS SHOWN HERE ARE FOR DETERMINING ANCHOR SPACING ONLY. ALLOWABLE STORM PANEL SPANS FOR SPECIFIC LOADS MUST BE LIMITED TO THOSE SHOWN IN TABLE 1.
2. ENTER ANCHOR SCHEDULE BASED ON THE EXISTING STRUCTURE MATERIAL, ANCHOR TYPE AND EDGE DISTANCE. SELECT DESIGN LOAD GREATER THAN OR EQUAL TO NEGATIVE DESIGN LOAD ON SHUTTER AND SELECT SPAN GREATER THAN OR EQUAL TO SHUTTER SPAN.
3. ANCHORS SHALL BE INSTALLED IN ACCORDANCE WITH MANUFACTURERS' RECOMMENDATIONS.
4. MINIMUM EMBEDMENT AND EDGE DISTANCE EXCLUDES WALL FINISH OR STUCCO. EMBEDMENT OF LAG SCREW SHALL ONLY INCLUDE THE THREADED PORTION AS DESIGNATED IN THE ANCHOR SCHEDULE.
5. FIELD VERIFY THAT FASTENERS ARE INTO ADEQUATE WOOD FRAMING MEMBERS, NOT PLYWOOD. FASTENING TO PLYWOOD IS ACCEPTABLE ONLY FOR SIDE CLOSURE PIECES.
6. WOOD STUD SHALL BE "SOUTHERN PINE" G=0.55 OR GREATER DENSITY. LAG SCREWS SHALL HAVE PHILLIPS PAN HEAD OR HEX HEAD.
7. MACHINE SCREWS SHALL HAVE MINIMUM OF 1/2" ENGAGEMENT OF THREADS IN BASE ANCHOR AND MAY HAVE EITHER A PAN HEAD, TRUSS HEAD, OR WAFER HEAD (SIDEWALK BOLT) AND WITH KEYHOLE WASHER FOR DIRECT MOUNT CONDITIONS, U.O.N.
8. (hatched) DESIGNATES ANCHOR CONDITIONS WHICH ARE NOT ACCEPTABLE USES.
9. * DESIGNATES ANCHORS WHICH ARE REMOVABLE BY REMOVING MACHINE SCREW, NUT OR WASHERED WINGNUT.

ANCHOR SCHEDULE

FASTENER MAXIMUM SPACING (INCHES) REQUIRED FOR VARIOUS DESIGN LOADS AND SPANS

EXISTING STRUCTURE	ANCHOR TYPE	LOAD (W) P.S.F. MAX (SEE NOTE 1)	MIN. 2" EDGE DISTANCE											
			SPANS UP TO 5' -6" (SEE NOTE 1)				SPANS UP TO 8' - 8" (SEE NOTE 1)				SPANS UP TO 10' - 5" (SEE NOTE 1)			
			CONNECTION TYPE (SEE NOTE 3)				CONNECTION TYPE (SEE NOTE 3)				CONNECTION TYPE (SEE NOTE 3)			
			C1	C2	C3	C4	C1	C2	C3	C4	C1	C2	C3	C4
CONCRETE	3/16"Φ ITW BUILDEX PHILLIPS FLAT HEAD OR SLOTTED HEX TAPCON W/ 1-3/4" MIN. EMBED. USE WITH (5) AND (5A) ONLY. (MIN. 3,100 P.S.I. CONCRETE)	48.0	12				12				12			
		62.0	12				12				12			
		72.0	12				12				11			
		92.0	12				10				10			
		200.0	10				10				10			
	1/4"Φ ITW BUILDEX TAPCON W/ 1-3/4" MIN. EMBEDMENT (MIN. 3,100 P.S.I. CONCRETE)	48.0	12	12	12	12	12	12	12	12	12	12	10	12
		62.0	12	12	12	12	12	12	10	12	12	12	8	7
		72.0	12	12	12	12	12	12	8	8	12	12	7	5
		92.0	12	12	10	12	12	12	6	5	12	12	6	5
		200.0	12	12	6	5	12	12	6	5	12	12	6	5
	1/4" ELCO MAXISET TAPCON W/ 1-3/4" MIN. EMBEDMENT (MIN. 3,100 P.S.I. CONCRETE)	48.0	12	12	12	12	12	12	12	12	12	12	12	12
		62.0	12	12	12	12	12	12	11	11	12	12	9	7
		72.0	12	12	12	12	12	12	9	7	12	12	8	5
		92.0	12	12	12	12	12	12	7	5	12	12	7	5
		200.0	12	12	7	5	12	12	7	5	12	12	7	5
	1/4"Φ ELCO TAPCON W/ 1-3/4" MIN. EMBEDMENT (MIN. 3,000 P.S.I. CONCRETE)	48.0	12	12	12	12	12	12	12	12	12	12	12	12
		62.0	12	12	12	12	12	12	11	11	12	12	9	7
		72.0	12	12	12	12	12	12	9	7	12	12	8	5
		92.0	12	12	12	12	12	12	7	5	12	12	7	5
		200.0	12	12	7	5	12	12	7	5	12	12	7	5
	1/4"Φ POWERS ZAMAC NAIL-IN W/ 1-1/8" MIN. EMBEDMENT (MIN. 3,000 P.S.I. CONCRETE)	48.0	12	12	12	12	12	12	8	12	12	12	7	7
		62.0	12	12	10	12	12	12	6	6	10	10	5	3
		72.0	12	12	9	12	10	10	5	4	8	8	4	
		92.0	12	12	7	7	8	8	4		8	8	4	
		200.0	8	8	4		8	8	4		8	8	4	
	1/4"Φ POWERS CALK-IN W/ 7/8" EMBEDMENT & 1/4-20 STAINLESS STEEL MACHINE SCREW (MIN. 3,000 P.S.I. CONCRETE) (*)	48.0	12	12	12	12	12	12	11	12	12	12	9	12
		62.0	12	12	12	12	12	12	8	12	12	12	7	7
		72.0	12	12	11	12	12	12	7	8	12	12	6	5
		92.0	12	12	9	12	12	12	5	5	12	12	5	5
		200.0	12	12	5	5	12	12	5	5	12	12	5	5
	1/4"Φ ELCO MALE/ FEMALE "PANELMATE" W/ 1-3/4 MIN. EMBEDMENT & 1/4-20 MACHINE SCREW WITH NUT (MIN. 3,300 P.S.I. CONCRETE) (*)	48.0	12	12	12	12	12	12	12	12	12	12	11	12
		62.0	12	12	12	12	12	12	10	12	12	12	9	8
		72.0	12	12	12	12	12	12	9	8	12	12	7	6
		92.0	12	12	11	12	12	12	7	5	12	12	7	5
		200.0	12	12	7	5	12	12	7	5	12	12	7	5

PRODUCT REVISED
as complying with the Florida Building Code
Acceptance No. 02-0410.02
Expiration Date 08/16/06
By
Miami Dade Product Control Division

KNEZEVICH & ASSOCIATES, INC.
CONSULTING ENGINEERS • PRODUCT TESTING
1260 N. UNIVERSITY DRIVE, SUITE 180 • FORT LAUDERDALE, FL 33322
TEL: (954) 382-2800 • FAX: (954) 382-2989 • FLORIDA COA #3205
WEBSITE: WWW.KNEZEVICH.COM • E-MAIL: KA@KNEZEVICH.COM

COPYRIGHT © 2002 KNEZEVICH & ASSOCIATES, INC.

0.0511" ALUMINUM STORM PANEL

4900 N.E. 11th AVE
FT. LAUDERDALE, FL 33334
(954) 489-9797
Ocean Shutters MANUFACTURING, INC.

V.J. KNEZEVICH
PROFESSIONAL ENGINEER
FL License No: PE 0010983

MAY 03 2002

revisions

no	date	by	description
1	07/18/01	AS	COUNTY COMMENTS
2	04/04/02	JP	NEW GENERAL NOTES
3	04/17/02	OLB	COUNTY COMMENTS
4	04/26/02	OLB	COUNTY COMMENTS
5	05/03/02	OLB	COUNTY COMMENTS

date 04/10/01
scale AS NOTED
drawn by AV
design by OLB
checked by VJK
drawing no. 00-393
sheet 4 of 5

ANCHOR SCHEDULE

FASTENER MAXIMUM SPACING (INCHES) REQUIRED FOR VARIOUS DESIGN LOADS AND SPANS

EXISTING STRUCTURE	ANCHOR TYPE	LOAD (W) P.S.F. MAX. (SEE NOTE 1)	MIN. 2" EDGE DISTANCE											
			SPANS UP TO 5' -6" (SEE NOTE 1)				SPANS UP TO 8' - 8" (SEE NOTE 1)				SPANS UP TO 10' - 5" (SEE NOTE 1)			
			CONNECTION TYPE (SEE NOTE 3)				CONNECTION TYPE (SEE NOTE 3)				CONNECTION TYPE (SEE NOTE 3)			
			C1	C2	C3	C4	C1	C2	C3	C4	C1	C2	C3	C4
HOLLOW CONCRETE BLOCK	3/16"Ø ITW BUILDEX PHILLIPS FLAT HEAD OR SLOTTED HEX TAPCON W/ 1-1/4" MIN. EMBED. USE WITH (5) AND (5A) ONLY	48.0	10				6				5			
		62.0	8				5				4			
		72.0	7				4				3			
		92.0	5				3				3			
		200.0	3				3				3			
	1/4"Ø ITW BUILDEX TAPCON W/ 1-1/4" MIN. EMBEDMENT	48.0	12	12	9	12	10	10	6	10	8	8	5	5
		62.0	12	12	7	12	8	8	4	4	6	6	3	
		72.0	11	11	6	11	7	7	4		5	5	3	
		92.0	8	8	5	4	5	5	3		5	5	3	
		200.0	5	5	3		5	5	3		5	5	3	
	1/4" ELCO MAXISET TAPCON W/ 1-1/4" MIN. EMBEDMENT	48.0	12	12	12	12	12	12	8	12	11	11	7	6
		62.0	12	12	10	12	10	10	6	5	8	8	5	3
		72.0	12	12	9	12	8	8	5	3	7	7	4	
		92.0	11	11	7	6	7	7	4		7	7	4	
		200.0	7	7	4		7	7	4		7	7	4	
	1/4"Ø ELCO TAPCON W/ 1-1/4" MIN. EMBEDMENT	48.0	12	12	12	12	12	12	8	12	11	11	7	6
		62.0	12	12	10	12	10	10	6	5	8	8	5	3
		72.0	12	12	9	12	8	8	5	3	7	7	4	
		92.0	11	11	7	6	7	7	4		7	7	4	
		200.0	7	7	4		7	7	4		7	7	4	
	1/4"Ø POWERS ZAMAC NAIL-IN W/ 1-1/8" MIN. EMBEDMENT	48.0	12	12	10	12	10	10	6	10	8	8	5	4
		62.0	12	12	7	12	7	7	5	3	6	6	4	
		72.0	10	10	6	10	6	6	4		5	5	3	
		92.0	8	8	5	4	5	5	3		5	5	3	
		200.0	5	5	3		5	5	3		5	5	3	
	* 1/4"Ø POWERS CALK-IN W/ 7/8" EMBEDMENT & 1/4-20 STAINLESS STEEL MACHINE SCREW	48.0	12	12	10	12	12	12	6	12	11	11	5	6
		62.0	12	12	8	12	10	10	5	5	8	8	4	3
		72.0	12	12	6	12	9	9	4	3	7	7	3	
		92.0	11	11	5	6	7	7	3		7	7	3	
		200.0	7	7	3		7	7	3		7	7	3	
	* * 1/4"Ø ELCO MALE/ FEMALE "PANELMATE" W/ 1-1/4 MIN. EMBEDMENT & 1/4-20 MACHINE SCREW WITH NUT	48.0	12	12	12	12	12	12	8	12	12	12	7	9
		62.0	12	12	10	12	12	12	6	7	12	12	5	4
		72.0	12	12	9	12	12	12	5	5	11	11	4	3
		92.0	12	12	7	9	10	10	4	3	10	10	4	3
		200.0	10	10	4	3	10	10	4	3	10	10	4	3

SEE PAGE 4 FOR COMPLETE ANCHOR NOTES.

TABLE 1 NOTE:

1. ENTER TABLE 1 WITH NEGATIVE DESIGN LOAD TO DETERMINE MAX. PANEL LENGTH. POSITIVE LOADS LESS THAN OR EQUAL TO THE NEGATIVE LOAD ARE ACCEPTABLE. FOR DESIGN LOADS BETWEEN TABULATED VALUES, NEXT HIGHER LOAD OR LINEAR INTERPOLATION MAY BE USED TO DETERMINE ALLOWABLE SPANS.

TABLE 2 NOTE:

1. ENTER TABLE 2 WITH POSITIVE DESIGN LOAD TO DETERMINE MIN. STORM PANEL SEPARATION FROM GLASS.

TABLE 2

POSITIVE DESIGN LOAD (W) (P.S.F.)	ACTUAL SPAN (L) (FT - IN)	COLUMN 1 MIN. SEP. FOR ALL INSTALLATIONS LESS THAN 30' ABOVE GRADE (INCHES)	COLUMN 2 MIN. SEP. FOR ALL INSTALLATIONS GREATER THAN 30' ABOVE GRADE (INCHES)
30.0	3 - 6	2-7/8	1-1/4
	8 - 8	2-7/8	2-1/8
	10 - 5	3	3
40.0	3 - 6	2-7/8	1-1/4
	8 - 8	2-7/8	2-3/8
	9 - 8	3	3
50.0	3 - 6	2-7/8	1-3/8
	8 - 8	2-7/8	2-5/8
	9 - 2	3	3
60.0	3 - 6	2-7/8	1-3/8
	8 - 8	2-7/8	2-1/2
	8 - 9	3	3
70.0	3 - 6	2-7/8	1-3/8
	8 - 0	2-7/8	1-5/8
	8 - 5	3	3
80.0	3 - 6	2-7/8	1-3/8
	8 - 0	2-7/8	2-7/8
	8 - 2	3	3
90.0	3 - 6	2-7/8	1-3/8
	7 - 8	2-7/8	2-7/8
	7 - 11	3	3
100.0	3 - 6	2-7/8	1-3/8
	7 - 6	2-7/8	2-7/8
	7 - 8	3	3
110.0	3 - 6	2-7/8	1-3/8
	5 - 6	2-7/8	1.3/4
	7 - 0	2-7/8	2-5/8
120.0	3 - 6	2-7/8	1-3/8
	4 - 6	2-7/8	1-1/2
	6 - 6	2-7/8	2-3/8

TABLE 1

MAX. ALLOWABLE STORM PANEL SPAN SCHEDULE	
DESIGN LOAD (P.S.F.)	SPAN (FT - IN)
30	10 - 5
35	10 - 0
40	9 - 8
45	9 - 5
48	9 - 3
50	9 - 2
55	8 - 11
60	8 - 9
62	8 - 8
65	8 - 7
67	8 - 6
70	8 - 5
72	8 - 4
75	8 - 3
80	8 - 2
90	7 - 11
100	7 - 8
110	7 - 1
115	6 - 9
120	6 - 6
130	6 - 0
140	5 - 6
150	5 - 2
160	4 - 10
170	4 - 7
180	4 - 4
190	4 - 1
200	3 - 10

PRODUCT REVIEWED
as complying with the Florida
Buiding Code
Acceptance No. 02-0410.02
Expiration Date 03/16/06
By
Miami Dade Product Control
Division

KNEZEVICH & ASSOCIATES, INC.
CONSULTING ENGINEERS • PRODUCT TESTING
1260 N. UNIVERSITY DRIVE, SUITE 180 • FORT LAUDERDALE, FL 33322
TEL: (954) 382-2800 • FAX: (954) 382-2989 • FLORIDA COA #3205
WEBSITE: WWW.KNEZEVICH.COM • E-MAIL: KA@KNEZEVICH.COM

COPYRIGHT © 2002 KNEZEVICH & ASSOCIATES, INC.

O.0511" ALUMINUM STORM PANEL

4900 N.E. 11th AVE
FT. LAUDERDALE, FL 33334
(954) 489-9797
Ocean Shutters MANUFACTURING, INC.

V.J. KNEZEVICH
PROFESSIONAL ENGINEER
FL License No. PE-0010983

MAY 08 2002

revisions

no	date	by	description
1	07/18/01	AS	COUNTY COMMENTS
2	04/04/02	JP	NEW GENERAL NOTES
3	04/17/02	OLB	COUNTY COMMENTS
4	04/26/02	OLB	COUNTY COMMENTS
5	05/03/02	OLB	COUNTY COMMENTS

date 04/10/01
scale AS NOTED
drawn by AV
design by OLB
checked by VJK
drawing no. 00-393
sheet 5 of 5