MIAMI-DADE

BUILDING CODE COMPLIANCE OFFICE (BCCO)
PRODUCT CONTROL DIVISION

MIAMI-DADE COUNTY, FLORIDA
METRO-DADE FLAGLER BUILDING
140 WEST FLAGLER STREET, SUITE 1603
MIAMI, FLORIDA 33130-1563
(305) 375-2901 FAX (305) 375-2908

NOTICE OF ACCEPTANCE (NOA)

Weather Shield Manufacturing, Inc.
1 Weather Shield Plaza
Medford, WI 54451

SCOPE:

This NOA is being issued under the applicable rules and regulations governing the use of construction materials. The documentation submitted has been reviewed by the BCCO and accepted by the Building Code and Product Review Committee (BCPRC) to be used in Miami Dade County and other areas where allowed by the Authority Having Jurisdiction (AHJ).

This NOA shall not be valid after the expiration date stated below. The BCCO (In Miami Dade County) and/or the AHJ (in areas other than Miami Dade County) reserve the right to have this product or material tested for quality assurance purposes. If this product or material fails to perform in the accepted manner, the manufacturer will incur the expense of such testing and the AHJ may immediately revoke, modify, or suspend the use of such product or material within their jurisdiction. BCPRC reserves the right to revoke this acceptance, if it is determined by BCCO that this product or material fails to meet the requirements of the applicable building code.

This product is approved as described herein, and has been designed to comply with the South Florida Building Code, 1994 Edition for Miami-Dade County or Florida Building Code.

DESCRIPTION: Series "Contempra TFT" Outswing Aluminum Clad Wood Casement Window

APPROVAL DOCUMENT: Drawing No. W97-44, titled "Casement/Outswing Windows", sheets 1 through 3, prepared, signed and sealed by Al Farooq, P.E., dated 12/9/97, bearing the Miami-Dade County Product Control Renewal stamp with the Notice of Acceptance number and expiration date by the Miami-Dade County Product Control Division.

MISSILE IMPACT RATING: None

LABELING: Each unit shall bear a permanent label with the manufacturer's name or logo, city, state and following statement: "Miami-Dade County Product Control Approved", unless otherwise noted herein.

RENEWAL of this NOA shall be considered after a renewal application has been filed and there has been no change in the applicable building code negatively affecting the performance of this product.

TERMINATION of this NOA will occur after the expiration date or if there has been a revision or change in the materials, use, and/or manufacture of the product or process. Misuse of this NOA as an endorsement of any product, for sales, advertising or any other purposes shall automatically terminate this NOA. Failure to comply with any section of this NOA shall be cause for termination and removal of NOA.

ADVERTISEMENT: The NOA number preceded by the words Miami-Dade County, Florida, and followed by the expiration date may be displayed in advertising literature. If any portion of the NOA is displayed, then it shall be done in its entirety.

INSPECTION: A copy of this entire NOA shall be provided to the user by the manufacturer or its distributors and shall be available for inspection at the job site at the request of the Building Official.

This NOA **renews NOA # 98-0728.06** and, consists of this page 1 as well as approval document mentioned above. The submitted documentation was reviewed by **Raul Rodriguez.**

PRODUCT CONTROL ACCEPTED

DESIGN LOAD CAPACITY - PSF

WINDOW DIMS.		1" INSULATED GLASS (5/32" / 5/32")		1/4" TEMP. GLASS	
WIDTH	HEIGHT	EXT.	INT.	EXT.	INT.
16"	24-1/8"	80.0	140.0	80.0	140.0
20"		80.0	112.0	80.0	112.0
24"		80.0	93.3	80.0	93.3
28"		80.0	80.0	80.0	80.0
32"		80.0	70.0	80.0	70.0
16"	28-1/8"	80.0	140.0	80.0	140.0
20"		80.0	112.0	80.0	112.0
24"		80.0	93.3	80.0	93.3
28"		80.0	80.0	80.0	80.0
32"		80.0	70.0	80.0	70.0
16"	32-1/8"	80.0	140.0	80.0	140.0
20"		80.0	112.0	80.0	112.0
24"		80.0	93.3	80.0	93.3
28"		80.0	80.0	80.0	80.0
32"		80.0	70.0	80.0	70.0
16"	36-1/8"	80.0	140.0	80.0	140.0
20"		80.0	112.0	80.0	112.0
24"		80.0	93.3	80.0	93.3
28"		80.0	80.0	80.0	80.0
32"		80.0	70.0	80.0	70.0
16"	40-1/8"	80.0	140.0	80.0	140.0
20"		80.0	112.0	80.0	112.0
24"		80.0	93.3	80.0	93.3
28"		80.0	80.0	80.0	80.0
32"		80.0	70.0	80.0	70.0
16"	44-1/8"	80.0	140.0	80.0	140.0
20"		80.0	112.0	80.0	112.0
24"		80.0	93.3	80.0	93.3
28"		80.0	80.0	80.0	80.0
32"		80.0	70.0	80.0	70.0
16"	48-1/8"	80.0	140.0	80.0	140.0
20"		80.0	112.0	80.0	112.0
24"		80.0	93.3	80.0	93.3
28"		80.0	80.0	80.0	80.0
32"		80.0	70.0	80.0	70.0
16"	54-1/8"	80.0	140.0	80.0	140.0
20"		80.0	112.0	80.0	112.0
24"		80.0	93.3	80.0	93.3
28"		80.0	80.0	80.0	80.0
32"		74.5	70.0	80.0	70.0
16"	58-1/8"	80.0	138.8	80.0	140.0
20"		80.0	111.0	80.0	112.0
24"		80.0	92.5	80.0	93.3
28"		79.3	79.3	80.0	80.0
32"		69.4	69.4	80.0	70.0
16"	62-1/8"	80.0	129.9	80.0	140.0
20"		80.0	103.9	80.0	112.0
24"		80.0	86.6	80.0	93.3
28"		74.2	74.2	80.0	80.0
32"		64.9	64.9	80.0	70.0
16"	72-1/8"	80.0	111.9	80.0	131.0
20"		80.0	89.5	80.0	106.0
24"		74.5	74.5	80.0	89.5
28"		63.9	63.9	80.0	78.0
32"		55.9	55.9	79.6	69.6

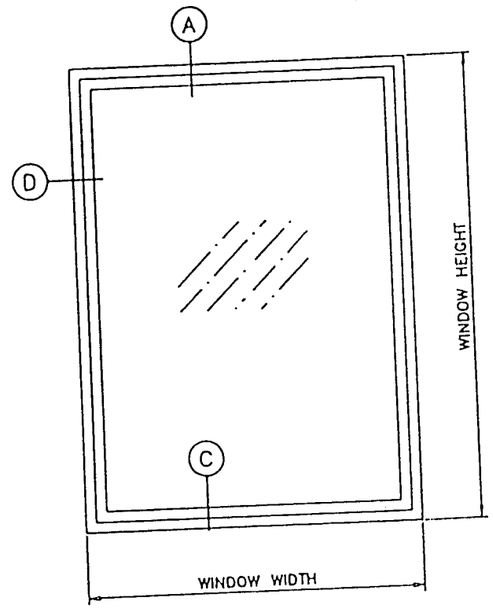

SINGLE LITE WINDOW

INSTRUCTIONS:

SINGLE UNIT INSTALLATION.

STEP 1 FOR A GIVEN WINDOW SIZE, LOCATION AND BUILDING HEIGHT CALCULATE POSITIVE AND NEGATIVE DESIGN LOAD AS PER ASCE 7-88.

STEP 2 SELECT GLASS TYPE.

STEP 3 FOR THE NEXT NEAREST WIDTH AND HEIGHT DRAW A HORIZONTAL LINE AND READ ALLOWABLE POSITIVE AND NEGATIVE LOAD CAPACITY FOR THE SELECTED GLASS TYPE.

STEP 4 CHECK TO MAKE SURE THAT ALLOWABLE DESIGN CAPACITY IS MORE THAN REQUIRED DESIGN LOADS DETERMINED IN STEP 1.

INSTRUCTIONS:

MULTIPLE UNITS INSTALLATION.

STEP 1 FOR A GIVEN OPENING SIZE, LOCATION AND BUILDING HEIGHT CALCULATE POSITIVE AND NEGATIVE DESIGN LOAD AS PER ASCE 7-88.

STEP 2 SELECT GLASS TYPE.

STEP 3 FOR THE NEXT NEAREST WIDTH AND HEIGHT DRAW A HORIZONTAL LINE AND READ ALLOWABLE POSITIVE AND NEGATIVE LOAD CAPACITY FOR THE SELECTED GLASS TYPE.

STEP 4 CHECK TO MAKE SURE THAT ALLOWABLE DESIGN CAPACITY IS MORE THAN REQUIRED DESIGN LOADS DETERMINED IN STEP 1.

STEP 5 USING TRIBUTARY WIDTH AS SHOWN FOR MULTIPLE UNITS DRAW A VERTICAL LINE ON MULLION GRAPH TO MEET THE MULLION SPAN CURVE, AT THIS POINT DRAW A HORIZONTAL LINE TO READ ALLOWABLE LOAD CAPACITY. THE MULLION CAPACITY MUST BE MORE THAN THE REQUIRED DESIGN LOADS DETERMINED IN STEP 1 ABOVE.

STEP 6 TO DETERMINE NUMBER OF ANCHORS AT MULLION DRAW A VERTICAL LINE ON ANCHOR GRAPHS (USING GIVEN TRIB. WIDTH) TO MEET THE MULLION SPAN CURVE. AT THIS POINT DRAW A HORIZONTAL LINE TO READ ALOWABLE LOAD CAPACITY. THIS CAPACITY MUST BE HIGHER THAN THE REQUIRED DESIGN LOADS DETERMINED IN STEP 1 ABOVE.

NOTES:

1. THIS STRUCTURE IS DESIGNED AS PER THE SOUTH FLORIDA BUILDING CODE 1994 EDITION FOR DADE COUNTY. ALSO FOR WIND LOADS AS PER ASCE 7-88 USING CORRESPONDING LOADS.
2. WOOD BUCKS BY OTHERS, MUST BE ANCHORED PROPERLY TO TRANSFER LOADS TO THE STRUCTURE.
3. ANCHORS SHALL BE AS LISTED, SPACED AS SHOWN ON DETAILS. ANCHOR EMBEDMENT TO BASE MATERIAL SHALL BE BEYOND WALL DRESSING OR STUCCO.

PRODUCT RENEWED
as complying with the Florida
Buiding Code
Acceptance No. 02-0411.02
Expiration Date October 26, 2006
By
Miami Dade Product Control
Division

CONTEMPRA TFT ALUMINUM CASEMENT WINDOWS
COMPARATIVE ANALYSIS CHART

BASED ON ATI-16232 OF 08-23-95
TEST SIZE = 32"W X 72"H
TEST LOADS = +120.0, -105.0 PSF
DESIGN LOADS = +80.0, -70.0 PSF
WATER INFILTRATION TEST = 12.0 PSF
TESTED GLASS = 1" INSULATED GLASS (5/32" / 5/32")
1/4" TEMPERED GLASS

PRODUCT RENEWED
ACCEPTANCE No. 98-0728.06
EXPIRATION DATE OCT 26 2001
By
PRODUCT CONTROL DIVISION
BUILDING CODE COMPLIANCE OFFICE
FEB 06 1998

Engr: DR. HUMAYOUN FAROOQ
STRUCTURES
FLA PE # 16557

APPROVED AS COMPLYING WITH THE SOUTH FLORIDA BUILDING CODE
DATE MARCH 12, 1998
BY
PRODUCT CONTROL DIVISION
BUILDING CODE COMPLIANCE OFFICE
ACCEPTANCE NO. 96-0708.02

AL-FAROOQ CORPORATION
ENGINEERS, PLANNERS & PRODUCT DESIGN
1235 SW 87 AVE
MIAMI, FLORIDA 33174
TEL (305) 264-8100 FAX. (305) 262-6978
COMP-ANI\W97-44W

CASEMENT/OUTSWING WINDOWS

WEATHER SHIELD WINDOWS & DOORS
1 WEATHER SHIELD PLAZA P.O.BOX 309
MEDFORD, WISCONSIN. 54451
TEL (715) 748-2100

revisions:

no	date	by	description
A	12-4-98		GENERAL REVISION

date: 12-09-97
scale: 1/2" = 1"
dr. by: HAMID
chk. by:

drawing no. W97-44

sheet 1 of 3

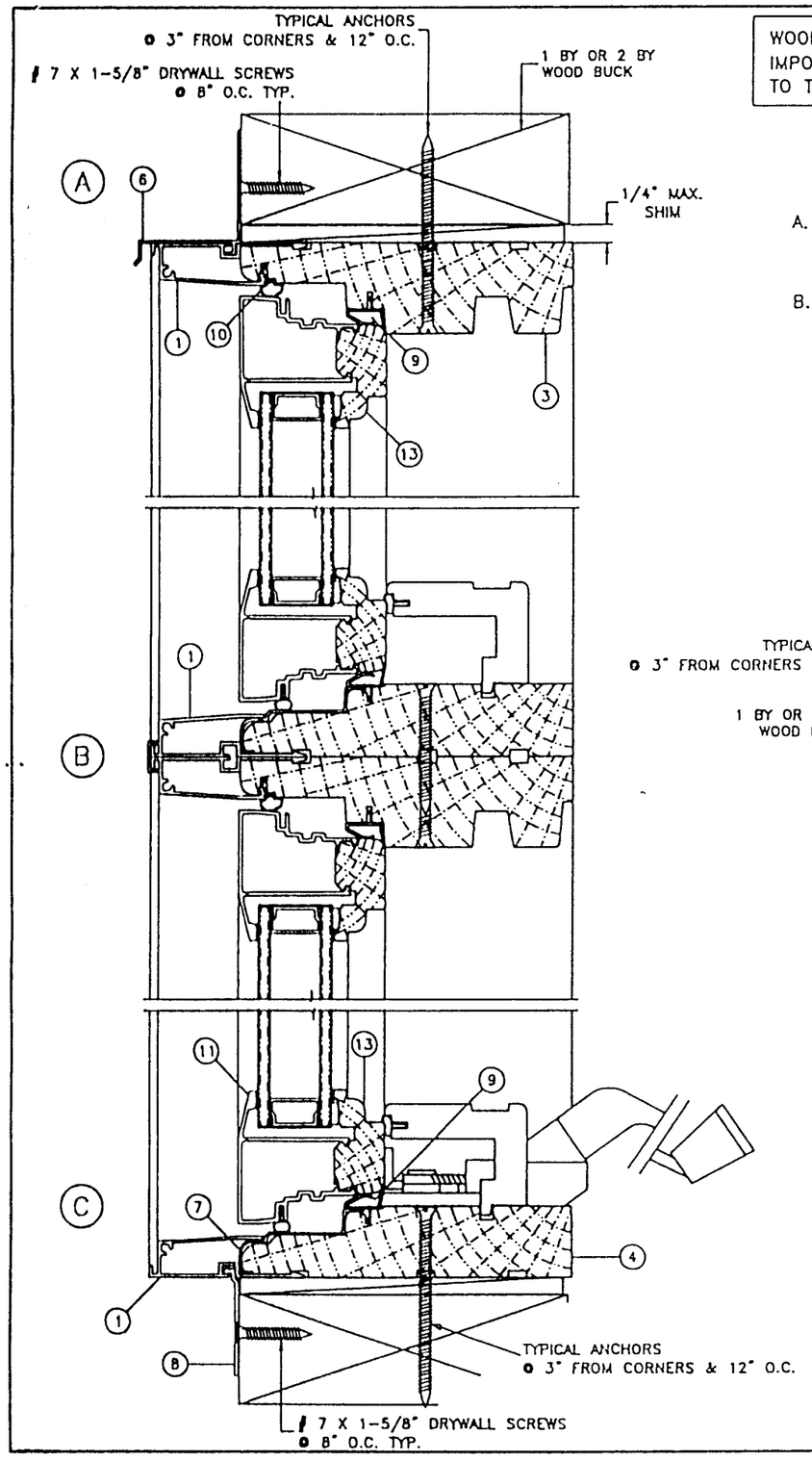

WOOD BUCKS NOT BY WEATHER SHIELD, MUST SUSTAIN LOADS IMPOSED BY GLAZING SYSTEM AND TRANSFER THEM TO THE BUILDING STRUCTURE.

TYPICAL ANCHORS:

A. INTO 2" BY WOOD BUCKS
10 SMS OR 3/16" DIA. TAPCONS
WITH 1-3/8" MIN. PENETRATION INTO WOOD

B. INTO 1" BY WOOD BUCKS OR INTO MASONRY
3/16" DIA. TAPCONS
WITH 1-1/4" MIN. EMBED INTO MASONRY

ITEM #	PART #	REQD.	DESCRIPTION	REMARKS/MATERIALS
1	900508	2	HEAD & SILL TFT	ALUMINUM
2	780002	2	SIDE TRIM WITH NAILING FIN	ALUMINUM
3	310003	1	HEAD JAMB	WOOD
4	310004	1	SILL	WOOD
5	310005	2	SIDE JAMBS	WOOD
6	780011	1	DRIP CAP	ALUMINUM
7	969911	1	SILL CLAD	ALUMINUM
8	760103	1	SILL NAILING FIN	ALUMINUM
9	760611	4	WEATHERSTRIP	-
10	760013	3	HEAD & SIDE JAMB WEATHERSTRIP	-
11	969378	2	SASH RAIL COVER	ALUMINUM
12	969381	2	SASH STILE COVER	ALUMINUM
13	311368	2	RAIL	WOOD
14	311369	2	STILE	WOOD

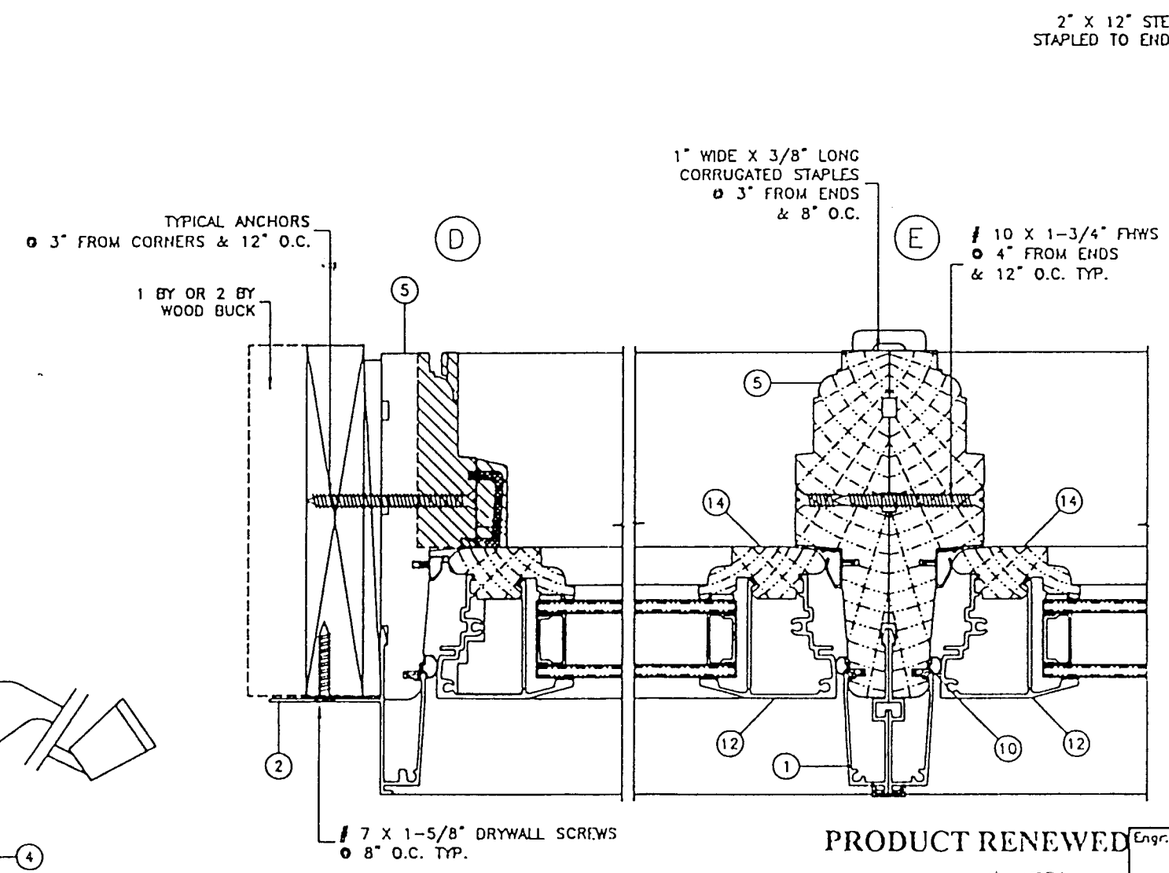

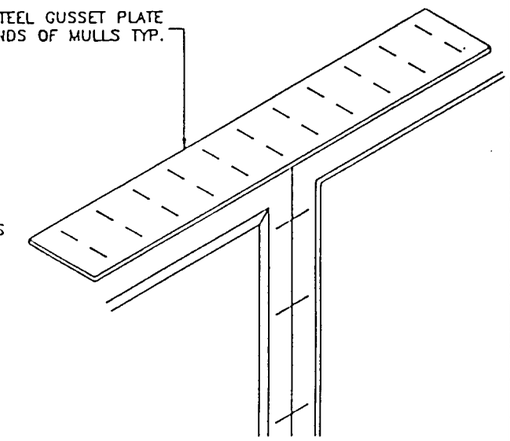

PRODUCT RENEWED
as complying with the Florida Buiding Code
Acceptance No 02-0411.02
Expiration Date October 26, 2006
By [signature]
Miami Dade Product Control Division

PRODUCT RENEWED
ACCEPTANCE No. 12-0728.06
EXPIRATION DATE OCT 26, 2001
By [signature]
PRODUCT CONTROL DIVISION
BUILDING CODE COMPLIANCE OFFICE

Engr. DR. HUMAYOUN FAROOQ
STRUCTURES
FLA. PE # 16557
FEB 06 1998

APPROVED AS COMPLYING WITH THE SOUTH FLORIDA BUILDING CODE
DATE MARCH 12, 1998
BY [signature]
PRODUCT CONTROL DIVISION
BUILDING CODE COMPLIANCE OFFICE
ACCEPTANCE NO. 96-0708.02

AL-FAROOQ CORPORATION
ENGINEERS, PLANNERS & PRODUCT DESIGN
1235 SW 87 AVE
MIAMI, FLORIDA 33174
TEL (305) 264-8100 FAX. (305) 262-6978
COMP-ANL\W97-44WS

CASEMENT/OUTSWING WINDOWS
WEATHER SHIELD WINDOWS & DOORS
1 WEATHER SHIELD PLAZA P.O.BOX 309
MEDFORD, WISCONSIN. 54451
TEL.(715) 748-2100

revisions:

no.	date	by	description

date: 12-06-97
scale: 1/2" = 1"
dr. by: HAMID
chk. by:

drawing no. W97-44

sheet 2 of 3

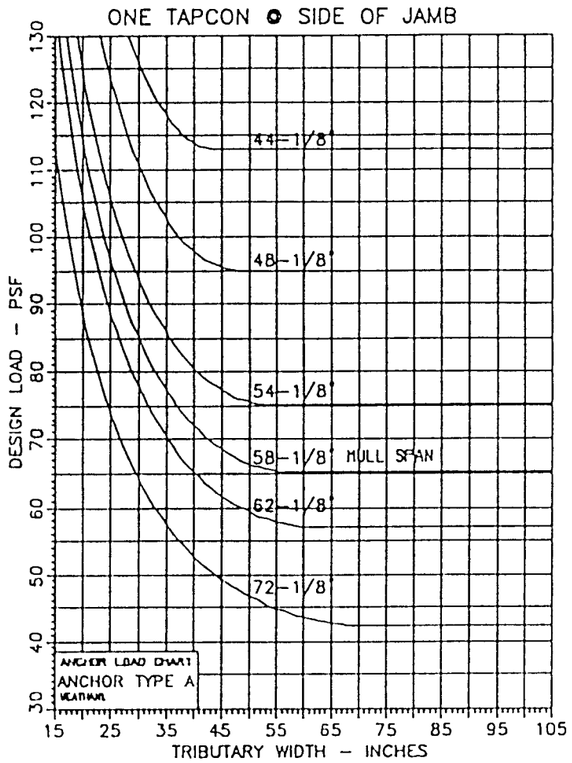

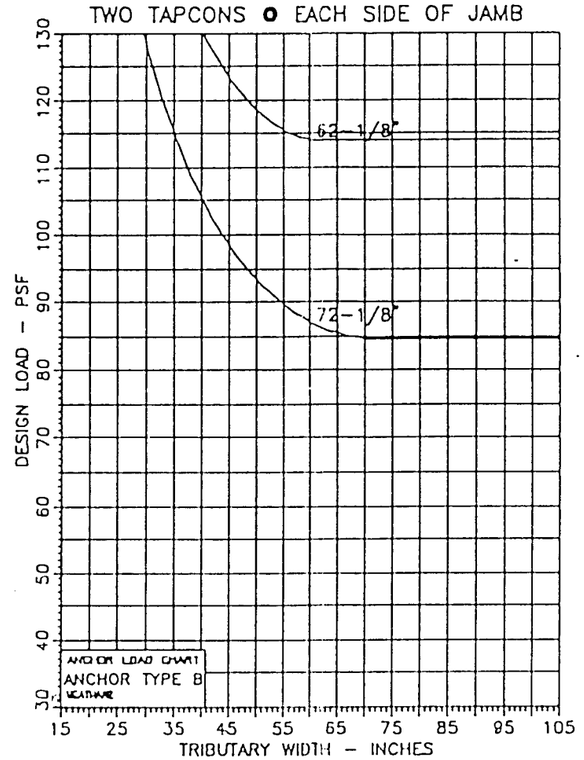

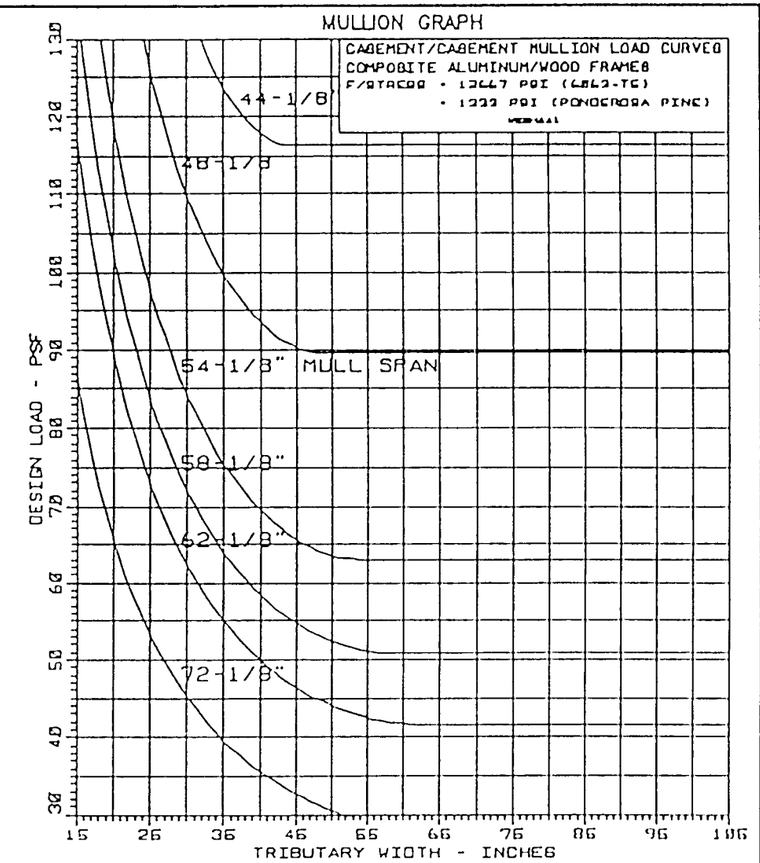

CASEMENT/OUTSWING WINDOWS SIDE BY SIDE CONNECTIONS

THE CURVES ON THESE GRAPHS SHOWS MULLION LENGTHS
SEE SKETCH FOR REFERENCE

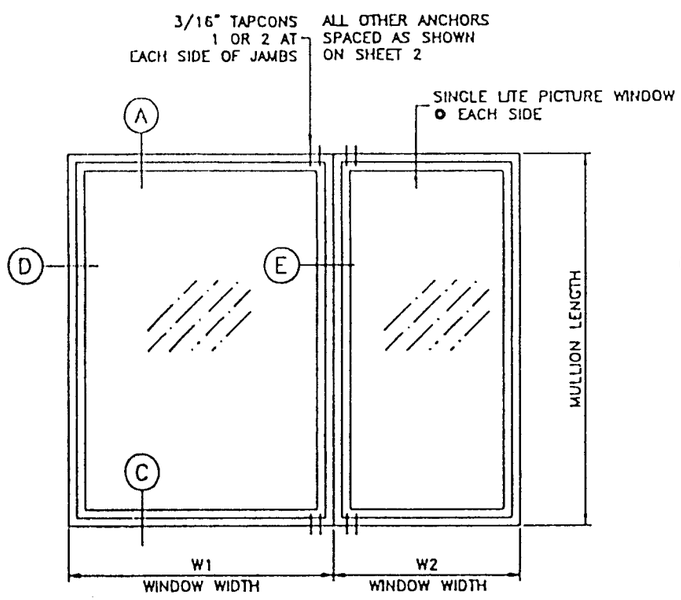

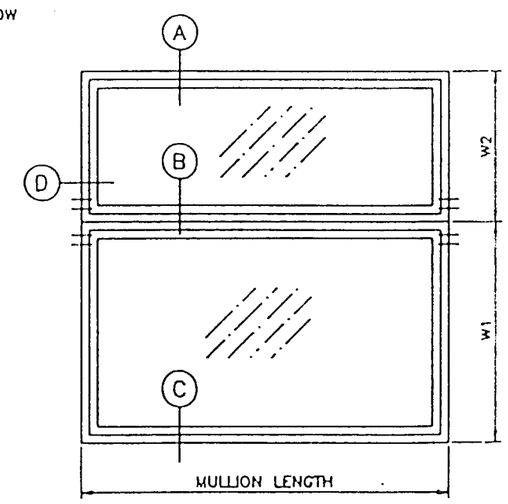

SIDE BY SIDE WINDOWS

$$\text{TRIBUTARY WIDTH} = \frac{W1 + W2}{2}$$

PRODUCT RENEWED
as complying with the Florida Buiding Code
Acceptance No. 02-0411.02
Expiration Date October 16, 2006
By
Miami Dade Product Control Division

PRODUCT RENEWED

ACCEPTANCE No. 96-0708.06
EXPIRATION DATE OCT 26, 2001
By
PRODUCT CONTROL DIVISION
BUILDING CODE COMPLIANCE OFFICE

Engr: DR. HUMAYOUN FAROOQ
STRUCTURES
FLA. PE # 16557

FEB 06 1998

APPROVED AS COMPLYING WITH THE SOUTH FLORIDA BUILDING CODE
DATE MARCH 12 19 98
BY
PRODUCT CONTROL DIVISION
BUILDING CODE COMPLIANCE OFFICE
ACCEPTANCE NO. 96-0708.02

AL-FAROOQ CORPORATION
ENGINEERS, PLANNERS & PRODUCT DESIGN
1235 SW 87 AVE
MIAMI, FLORIDA 33174
TEL (305) 264-8100 FAX. (305) 262-6978

COMP-ANL\W97-44WS

CASEMENT/OUTSWING WINDOWS

WEATHER SHIELD WINDOWS & DOORS
1 WEATHER SHIELD PLAZA P.O.BOX 309
MEDFORD, WISCONSIN. 54451
TEL(715) 748-2100

revisions:		
no.	date	by	description

date: 12-09-97
scale: 1/2" = 1'
dr. by: HAMID
ck. by:

drawing no.
W97-44

sheet 3 of 3