MIAMI-DADE

BUILDING CODE COMPLIANCE OFFICE (BCCO)
PRODUCT CONTROL DIVISION

MIAMI-DADE COUNTY, FLORIDA
METRO-DADE FLAGLER BUILDING
140 WEST FLAGLER STREET, SUITE 1603
MIAMI, FLORIDA 33130-1563
(305) 375-2901 FAX (305) 375-2908

NOTICE OF ACCEPTANCE (NOA)

Premdor Exterior Door Product
1955 Powis Road
West Chicago, IL 60185

SCOPE:
This NOA is being issued under the applicable rules and regulations governing the use of construction materials. The documentation submitted has been reviewed by Miami-Dade County Product Control Division and accepted by the Board of Rules and Appeals (BORA) to be used in Miami Dade County and other areas where allowed by the Authority Having Jurisdiction (AHJ).

This NOA shall not be valid after the expiration date stated below. The Miami-Dade County Product Control Division (In Miami Dade County) and/or the AHJ (in areas other than Miami Dade County) reserve the right to have this product or material tested for quality assurance purposes. If this product or material fails to perform in the accepted manner, the manufacturer will incur the expense of such testing and the AHJ may immediately revoke, modify, or suspend the use of such product or material within their jurisdiction. BORA reserves the right to revoke this acceptance, if it is determined by Miami-Dade County Product Control Division that this product or material fails to meet the requirements of the applicable building code.

This product is approved as described herein, and has been designed to comply with the High Velocity Hurricane Zone of the Florida Building Code.

DESCRIPTION: Fiberglass Door Glazed 6'8" Outswing w/wo Sidelites

APPROVAL DOCUMENT: Drawing No. S-2202, titled "Exterior Door Product Single & Doubl Outswing 6'8 Glazed Fiberglass Door", sheets 1 through 8, prepared by RW Building Consultants, Inc., dated 1/17/02, bearing the Miami-Dade County Product Control Approval stamp with the Notice of Acceptance number and approval date by the Miami-Dade County Product Control Division.

MISSILE IMPACT RATING: None

LABELING: Each unit shall bear a permanent label with the manufacturer's name or logo, city, state and following statement: "Miami-Dade County Product Control Approved", unless otherwise noted herein.

RENEWAL of this NOA shall be considered after a renewal application has been filed and there has been no change in the applicable building code negatively affecting the performance of this product.

TERMINATION of this NOA will occur after the expiration date or if there has been a revision or change in the materials, use, and/or manufacture of the product or process. Misuse of this NOA as an endorsement of any product, for sales, advertising or any other purposes shall automatically terminate this NOA. Failure to comply with any section of this NOA shall be cause for termination and removal of NOA.

ADVERTISEMENT: The NOA number preceded by the words Miami-Dade County, Florida, and followed by the expiration date may be displayed in advertising literature. If any portion of the NOA is displayed, then it shall be done in its entirety.

INSPECTION: A copy of this entire NOA shall be provided to the user by the manufacturer or its distributors and shall be available for inspection at the job site at the request of the Building Official.
This NOA consists of this page 1 as well as approval document mentioned above.
The submitted documentation was reviewed by **Theodore Berman, P.E.**

Premdor Exterior Door Products

NOTICE OF ACCEPTANCE: EVIDENCE SUBMITTED
(For File ONLY. Not part of NOA)

A. DRAWINGS

1. Manufacturer's die drawings and sections.
2. Drawing No. **S-2202**, titled "Exterior Door Product Single & Doubl Outswing 6'8 Glazed Fiberglass Door", sheets 1 through 8, prepared by RW Building Consultants, Inc., dated 1/17/02.

B. TESTS

1. Test reports on 1) Air Infiltration Test, per FBC, TAS 202-94
   2) Uniform Static Air Pressure Test, Loading per FBC TAS 202-94
   3) Water Resistance Test, per FBC, TAS 202-94
   4) Forced Entry Test, per FBC 3603.2 (b) and TAS 202-94

   along with marked-up drawings and installation diagram of a fiberglass outswing/inswing glazed double door, prepared by Certified Testing Laboratories, Test Report No. **CTLA805W-2**, dated 2/3/02, signed and sealed by Ramesh Patel, P.E.

C. CALCULATIONS

1. Anchor Calculations and structural analysis, prepared by Lyndon Schmidt, P.E., dated 3/12/02, signed and sealed by Lyndon Schmidt, P.E.

D. MATERIAL CERTIFICATIONS

1. Notice of Acceptance No. **01-0718.08** issued to ODL, Inc. for "HP Polypropylene Doorlight Assembly" dated 1/17/02, expiring on 1/17/06.
2. Test Report No. ETC-00-577-10148.0, prepared by ETC Laboratories, issued to RSL, Inc., dated 12/15/01, for Extruded PVC, tested per **ASTM D 635 - 91**"Standard Test Method for Rate of Burning and Time of Burning of Self-Supporting Plastics in a Horizontal Position"; **ASTM D 2843-93** "Standard Test Method for Density of Smoke from the Burning or Decomposition of Plastics"; **ASTM D790-96** "Standard Test Methods for Flexural Properties of Unreinforced and reinforced Plastics and Electrical Insulating Materials, signed and sealed by Joseph L. Doldan, P.E.
3. Test Report No. ETC-01-756-10828.0, prepared by ETC Laboratories, issued to Trinity Glass International, dated 5/22/01, for non-foam lupoy, tested per **ASTM D 635 -96**"Standard Test Method for Rate of Burning and Time of Burning of Self-Supporting Plastics in a Horizontal Position"; **ASTM D 2843-93** "Standard Test Method for Density of Smoke from the Burning or Decomposition of Plastics"; **ASTM D1929-96** "Standard Test Methods for Ignition Properties of Plastics, **ASTM D 638 -96**"Standard Test Method for Tensile Properties of Plastics" signed and sealed by Joseph L. Doldan, P.E.

Theodore Berman, P.E., Deputy Director
Product Control Division
NOA No 02-0418.03
Expiration Date: December 26, 2007
Approval Date: December 26, 2002

PREMDOR® Collection
Premium Quality Doors

FIBERGLASS GLAZED OUT-SWING DOOR UP TO 12'0 X 6'8 WITH OR WITHOUT SIDELITES

GENERAL NOTES

1. THIS PRODUCT IS DESIGNED TO COMPLY WITH THE FLORIDA BUILDING CODE.
2. WOOD BUCKS BY OTHERS, MUST BE ANCHORED PROPERLY TO TRANSFER LOADS TO THE STRUCTURE.
3. PRODUCT ANCHORS SHALL BE AS LISTED AND SPACED AS SHOWN ON DETAILS. ANCHOR EMBEDMENT TO BASE MATERIAL SHALL BE BEYOND WALL DRESSING OR STUCCO.
4. DESIGNED PRESSURE RATING SEE TABLE PAGE 1.
5. THIS PRODUCT MEETS THE WATER REQUIREMENTS FOR "HIGH VELOCITY HURRICANE ZONES" WITH THE USE OF THE HIGH DAMP BUMP THRESHOLD.
6. THIS SYSTEM REQUIRES WINDBORNE DEBRIS EXTERNAL PROTECTION AS PRESCRIBED IN SECTION 1626.1 OF THE FLORIDA BUILDING CODE.

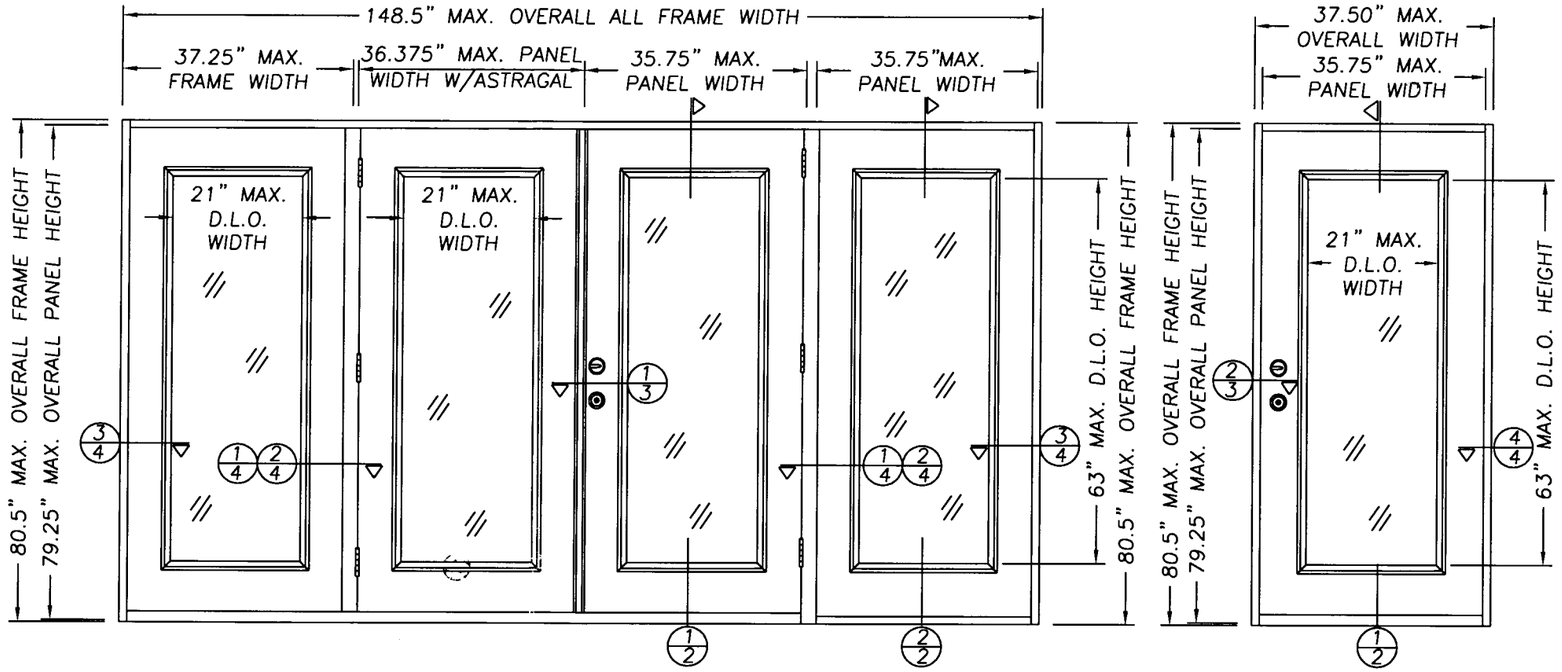

DOUBLE W/SIDELITES OUT-SWING UNIT VIEWED FROM THE EXTERIOR

SINGLE OUT-SWING UNIT

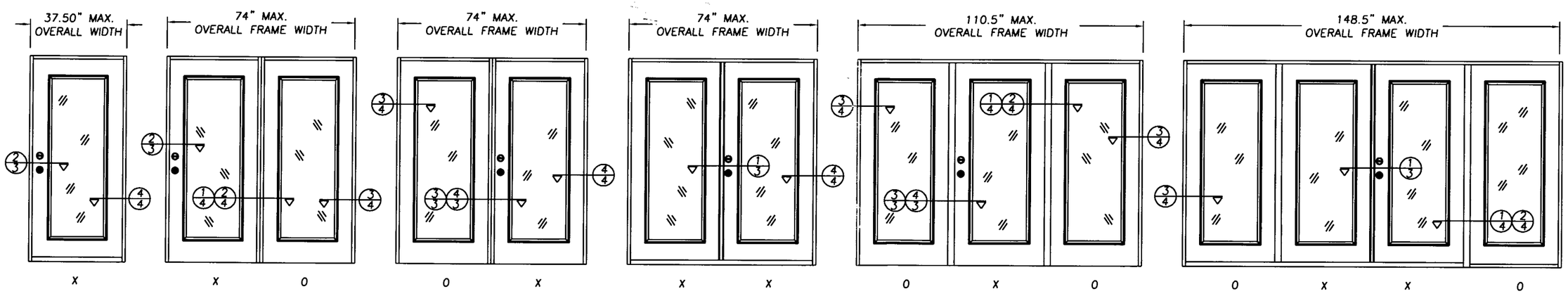

TABLE OF CONTENTS	
SHEET #	DESCRIPTION
1	TYPICAL ELEVATIONS & GENERAL NOTES
2	VERTICAL CROSS SECTIONS & BILL OF MATERIALS
3	HORIZONTAL CROSS SECTIONS
4	HORIZONTAL CROSS SECTIONS
5	ANCHORING LOCATIONS
6	ANCHORING LOCATIONS & DETAILS
7	GLAZING DETAILS & NOTES
8	UNIT COMPONENTS

DESIGN PRESSURE RATING WHERE WATER INFILTRATION REQUIREMENT IS NEEDED		
UNIT TYPE	POSITIVE	NEGATIVE
SINGLE	+ 55.0 PSF	- 55.0 PSF
SINGLE WITH SIDELITES	+ 55.0 PSF	- 55.0 PSF
DOUBLE W/WO SIDELITES (WITH GENESIS WIDJAMBER II ASTRAGAL)	+ 55.0 PSF	- 55.0 PSF
DOUBLE W/WO SIDELITES (WITH ENDURA ULTIMATE ASTRAGAL)	+ 52.0 PSF	- 52.0 PSF

Approved as complying with the Florida Building Code
Date 12/26/02
NOA# 02-0418.03
Miami Dade Product Control Division
By [signature]

PREMDOR EXTERIOR DOOR PRODUCTS
1955 POWIS ROAD
WEST CHICAGO, IL. 60185
PH. (630) 584-6330

PRODUCT: EXTERIOR DOOR PRODUCT SINGLE & DOUBLE OUTSWING 6'8 GLAZED FIBERGLASS DOOR

PART OR ASSEMBLY: TYPICAL ELEVATIONS & GENERAL NOTES

REVISIONS

NO.	DATE	BY
C	12/3/02	SWS
B	11/25/02	SWS
A	10/1/02	SWS

DOCUMENT REDRAWN
SECTION #'s REV.
ADDED DXD

DATE: 1/17/02
SCALE: N.T.S.
DWG. BY: WLN
CHK. BY: RW
DRAWING NO.: S-2202
SHEET 1 OF 8

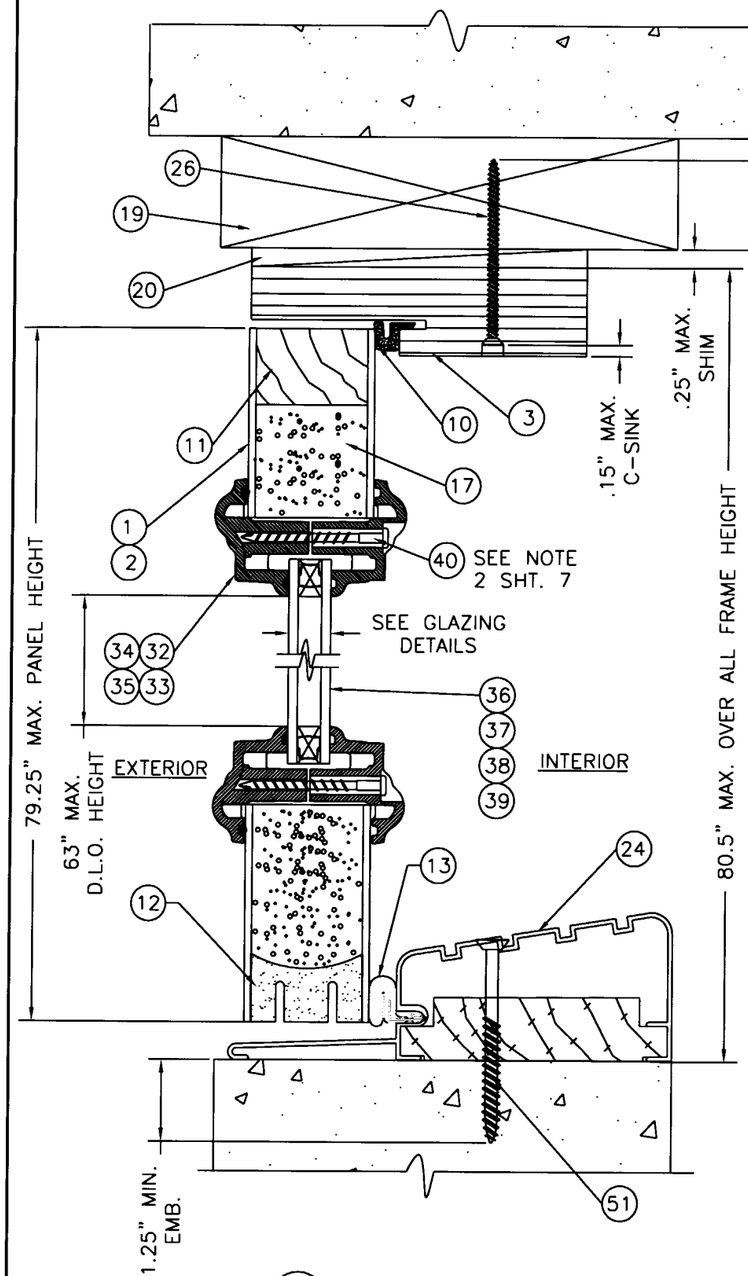

1/2 VERTICAL CROSS SECTION
DOOR PANEL

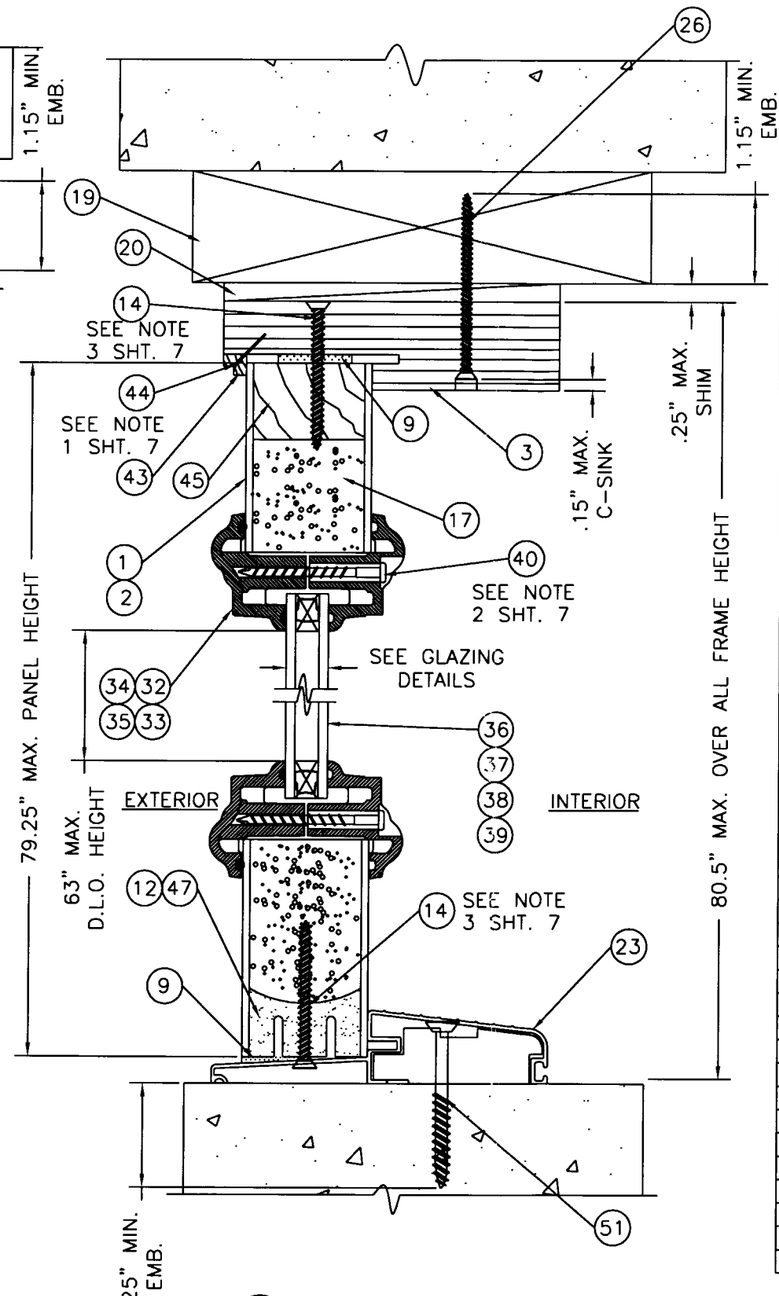

2/2 VERTICAL CROSS SECTION
SIDELITE PANEL

ITEM	DESCRIPTION	MATERIAL
1	FIBERGLASS DOOR SKIN 0.095" THK. TAN WOOD GRAIN BY APPLIED COMPOSITES	FIBERGLASS
2	FIBERGLASS DOOR SKIN 0.075" THK. WHITE SMOOTH BY APPLIED COMPOSITES	FIBERGLASS
3	HEAD JAMB (1 1/4" x 4 9/16" LAMINATED LUMBER)	LAM. LUMBER
4	HINGE JAMB (1 1/4" x 4 9/16" LAMINATED LUMBER)	LAM. LUMBER
5	SIDELITE BLANK JAMB (1 1/4" x 4 9/16" LAMINATED LUMBER)	LAM. LUMBER
6	4" x 4" BUTT HINGE 12ga.(.097" HAGER)	STEEL
7	#10 X 3/4" PFH WOOD SCREW (HINGE TO DOOR)	STEEL
8	DOOR LATCH & HINGE SIDE STILE & 3-0 SL. SIDE STILE (1.581" W x 1.75"H) LAM. LUMBER W/FJ PINE FACE	LAM. LUMBER
9	PAK WIK SPACER	ALUM.
10	COMPRESSION WEATHERSTRIP (SCHLEGEL Q-LON QDS 650)	FOAM
11	DOOR TOP RAIL (1.581" W x 1.027"H) VIROLA	VIROLA
12	DOOR BOTTOM RAIL & 3-0 SL BOTTOM RAIL (1.581" W x .925") WOOD COMPOSITE)	COMPOSITE
13	COMPRESSION WEATHERSTRIP (LOXCREEN LOXSEAL V-9650)	FOAM
14	#10 x 2" PFH WOOD SCREW	STEEL
15	LOCK BLOCK (1.581" W x 2.0" H x 21" L)	WOOD
16	#8 x 1 3/4" PFH WOOD SCREW	STEEL
17	POLYURETHANE FOAM CORE (BASF 2.0 TO 2.5lbs./sq. ft)	FOAM
18	LATCH JAMB (1 1/4" x 4 9/16" LAMINATED LUMBER)	LAM. LUMBER
19	2x INNER WOOD SUB BUCK	WOOD
20	SHIM MATERIAL (.25" MAX. THK.)	–
21	KWIKSET 400 SERIES KNOB	–
22	KWIKSET TITAN 700 SERIES DEADBOLT	–
23	OUTSWING BUMP THRESHOLD BY WORLD WIDE .050" ALUM.	ALUMINUM
24	OUTSWING HIGH DAM BUMP THRESHOLD BY IMPERIAL .051" ALUM.	ALUMINUM
25	SILICONE CAULK DOW SILICONE #995	SILICONE
26	#8 x 2 1/2" PFH WOOD SCREW	STEEL
27	#8 x 3" PFH WOOD SCREW	STEEL
28	1PIECE MULLION (FAT BOY MULLION BY ENDURA)	LAM. LUMBER
29	ASTRAGAL EXTRUDED ALUM. (WR68P WINDJAMBER II)	ALUM.
30	ASTRAGAL EXTRUDED ALUM. (ULTIMATE ASTRAGAL BY ENDURA)	ALUM.
31	NOT USED	–
32	LIP LITE FRAME .5" GLASS (BY TRINITY/AMPAC)	POLYPROP.
33	LIP LITE FRAME .5" GLASS (ODL HP POLYPROP. THERMOFIL-P6-30FM0391)	POLYPROP.
34	LIP LITE FRAME .5" GLASS (BY RSL)	PVC
35	LIP LITE FRAME .5" GLASS (BY SPECIALTY/BAYLITE)	POLYPROP.
36	.5" INSULATED TEMP. GLASS (BY TRINITY)	–
37	.5" INSULATED TEMP. GLASS (WESTERN REFLECTIONS)	–
38	.5" INSULATED TEMP. GLASS (BY RSL)	–
39	.5" INSULATED TEMP. GLASS (BY PPG)	–
40	#6 x 1 1/2" PANHEAD SCREW (LITE FRAME)	STEEL
41	#8 x 1" PFH WOOD SCREW	STEEL
42	#10 x 2 1/2" PFH WOOD SCREW	STEEL
43	WOOD SIDELITE TRIM 5/16" x 1/2"	PINE
44	16GA. PIN NAIL x 3/4" LONG	STEEL
45	3-0 & 14" SIDELITE TOP RAIL (1.581" W x 1.027"H) VIROLA	VIROLA
46	14" SIDELITE SIDE STILE (1.581" W x 1.027"H) VIROLA	VIROLA
47	14" SIDELITE BOTTOM RAIL (1.581" W x 1.027") VIROLA	VIROLA
48	#10 x 1" PFH WOOD SCREW	STEEL
49	#8 x 1" PFH DECK SCREW	STEEL
50	#10 x 3" PFH WOOD SCREW	STEEL
51	1/4" x 2 1/4" TAPCON	STEEL

PREMDOR EXTERIOR DOOR PRODUCTS
1955 POWIS ROAD
WEST CHICAGO, IL. 60185
PH. (630) 584-6330

PRODUCT: EXTERIOR DOOR PRODUCT SINGLE AND DOUBLE OUTSWING 6'8 GLAZED FIBERGLASS DOOR

PART OR ASSEMBLY: VERTICAL CROSS SECTION & BILL OF MATERIAL

NO.	DATE	REVISIONS	BY
A	10/1/02	DOCUMENT REDRAWN DESCRIPTION FOR ITEM #33 CHANGED	SWS

Approved as complying with the Florida Building Code
Date 12/26/02
NOA# 02-0418.03
Miami Dade Product Control Division
By Gloveda Rawan

DATE: 1/17/02
SCALE: N.T.S.
DWG. BY: WLN
CHK. BY: RW
DRAWING NO.: S-2202
SHEET 2 OF 8

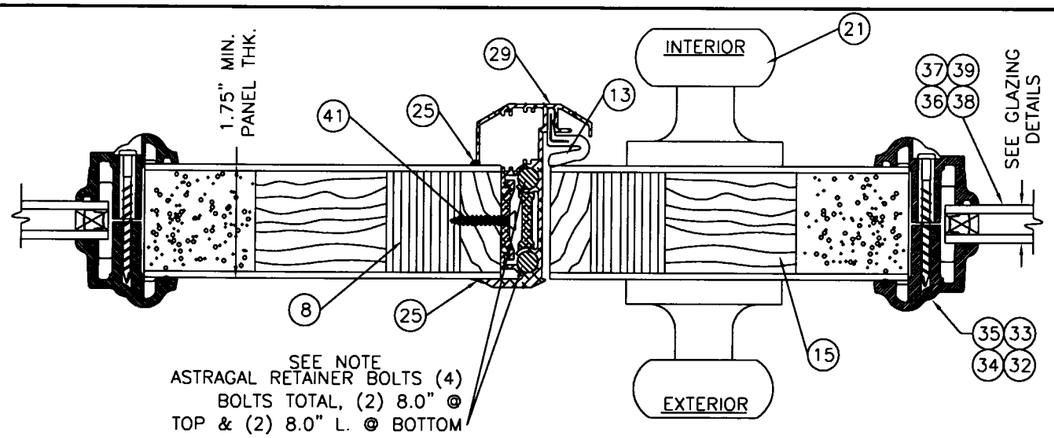

1/3 HORIZONTAL CROSS SECTION
INSWING UNIT
W/WINDJAMBER ASTRAGAL MFG BY
GENESIS ARCHITECTURAL PRODUCTS

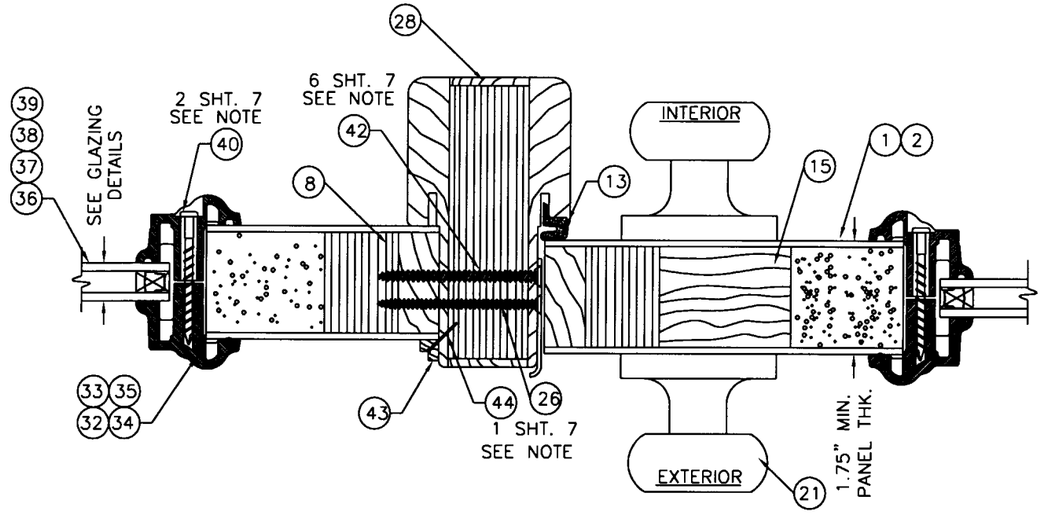

3/3 HORIZONTAL CROSS SECTION
LATCH TO SIDELITE
(SHOWN WITH 3'0 SIDELITE)
NOTE: UNCLIPPED LAMINATED MULLION USED
WITH CONTINUOUS HEAD & THRESHOLD

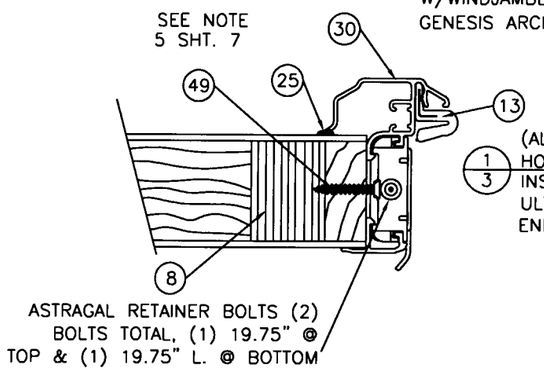

1/3 (ALTERNATE)
HORIZONTAL CROSS SECTION
INSWING UNIT
ULTIMATE ASTRAGAL MFG BY
ENDURA PRODUCTS

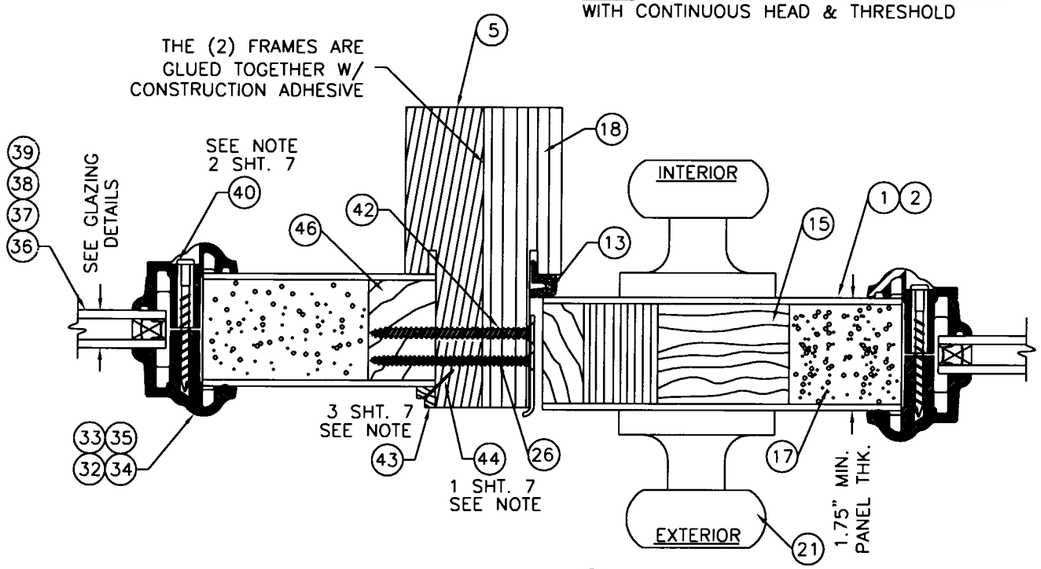

4/3 HORIZONTAL CROSS SECTION
LATCH TO SIDELITE
(SHOWN WITH 14" SIDELITE)
NOTE: DOOR & SIDELITE JAMB FORMS
UNCLIPPED MULLION WHEN NOT USING
CONTINUOUS HEAD & THRESHOLD

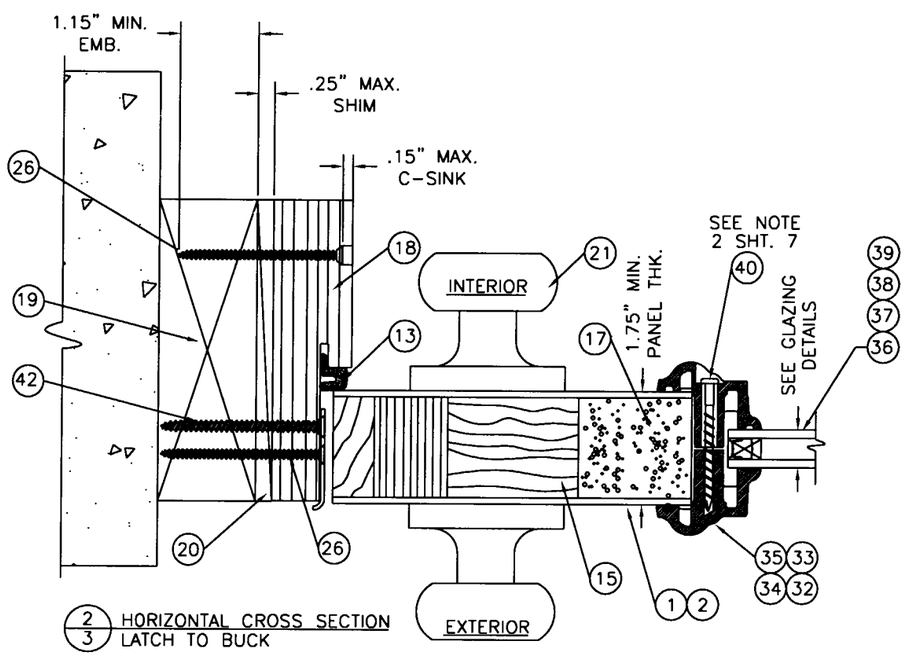

2/3 HORIZONTAL CROSS SECTION
LATCH TO BUCK

PREMDOR EXTERIOR DOOR PRODUCTS
1955 POWIS ROAD
WEST CHICAGO, IL. 60185
PH. (630) 584-6330

PRODUCT: EXTERIOR DOOR PRODUCTS SINGLE & DOUBLE OUTSWING 6'8 GLAZED FIBERGLASS DOOR

PART OR ASSEMBLY: HORIZONTAL CROSS SECTIONS

NO.	DATE	REVISIONS	BY
B	11/25/02	SECTION #'s REV.	SWS
A	10/1/02	DOCUMENT REDRAWN	SWS

Approved as complying with the Florida Building Code
Date 12/26/02
NOA# 02-0418.03
Miami Dade Product Control Division
By [signature]

DATE: 1/17/02
SCALE: N.T.S.
DWG. BY: WLN
CHK. BY: RW
DRAWING NO.: S-2202
SHEET 3 OF 8

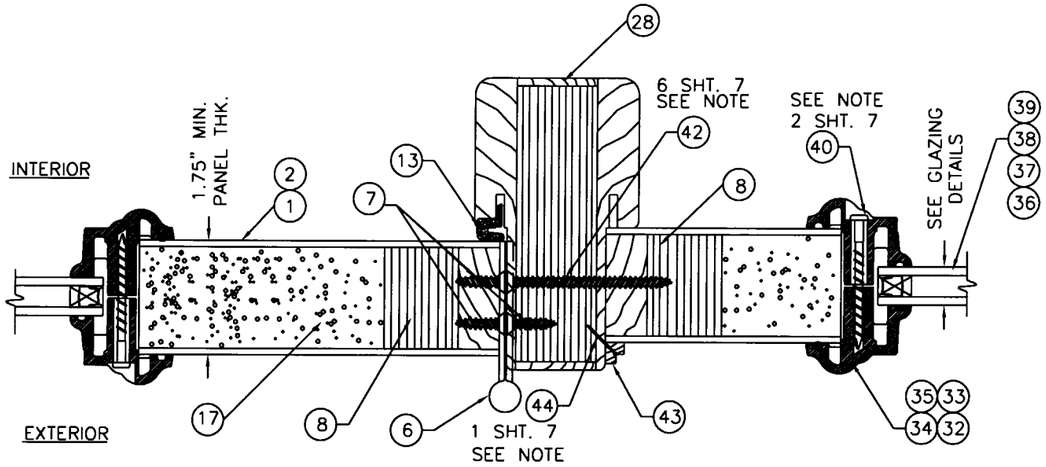

1/4 HORIZONTAL CROSS SECTION
HINGE TO SIDELITE
(SHOWN WITH 3'0 SIDELITE)
NOTE: UNCLIPPED LAMINATED MULLION USED WITH CONTINUOUS HEAD & THRESHOLD

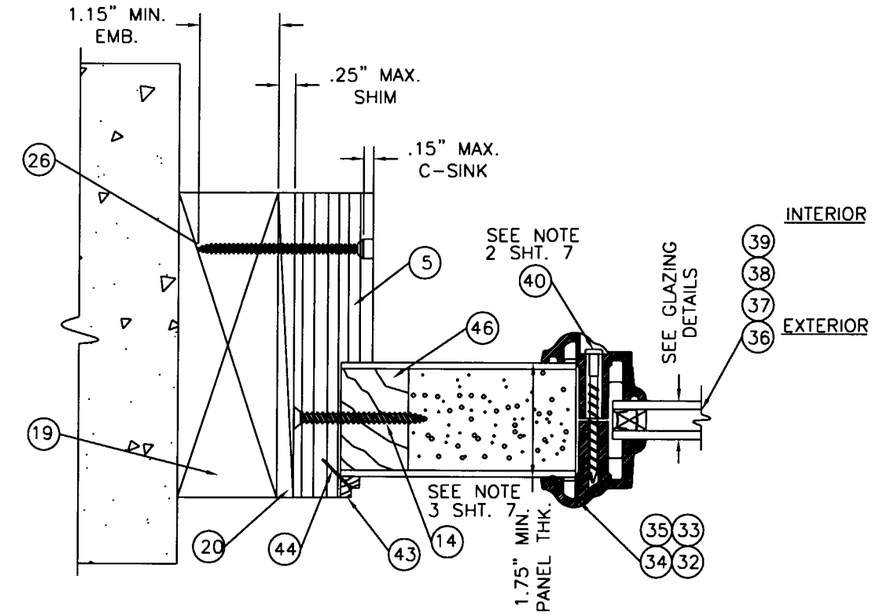

3/4 HORIZONTAL CROSS SECTION
SIDELITE TO BUCK

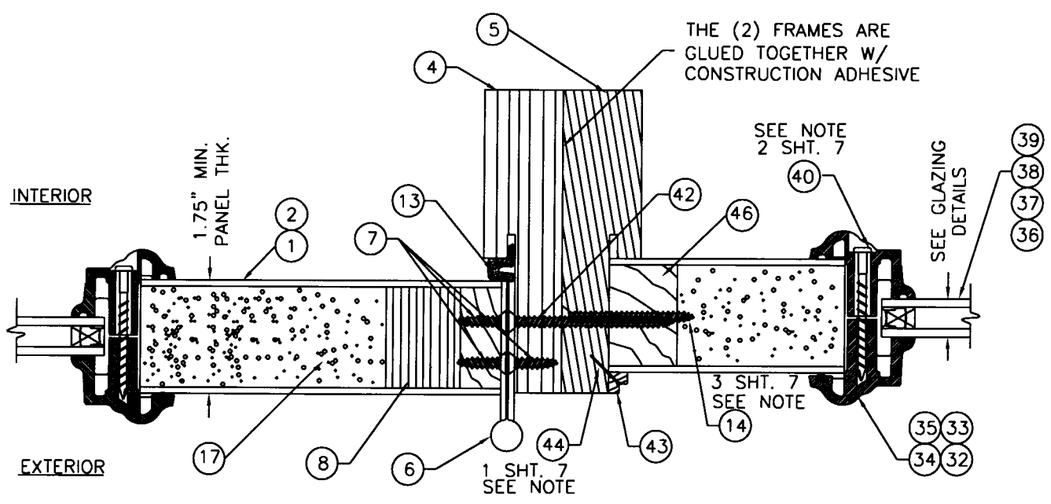

2/4 HORIZONTAL CROSS SECTION
HINGE TO SIDELITE
(SHOWN WITH 14" SIDELITE)
NOTE: DOOR & SIDELITE JAMB FORMS UNCLIPPED MULLION WHEN NOT USING CONTINUOUS HEAD & THRESHOLD

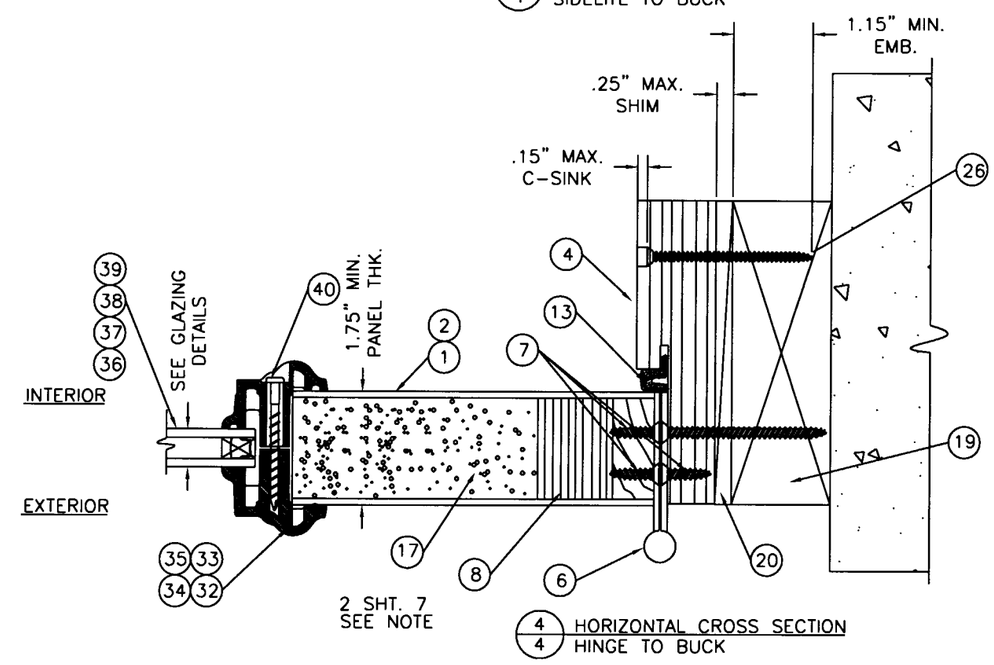

4/4 HORIZONTAL CROSS SECTION
HINGE TO BUCK

Approved as complying with the Florida Building Code
Date 12/26/02
NOA# 02-0918.03
Miami Dade Product Control Division
By: Theodore Bowman

PREMDOR EXTERIOR DOOR PRODUCTS
1955 POWIS ROAD
WEST CHICAGO, IL. 60185
PH. (630) 584-6330

PRODUCT: EXTERIOR DOOR PRODUCTS SINGLE & DOUBLE OUTSWING 6'8 GLAZED FIBERGLASS DOOR

PART OR ASSEMBLY: HORIZONTAL CROSS SECTIONS

NO.	DATE	DOCUMENT REDRAWN	BY
A	10/1/02	SWS	

REVISIONS

DATE: 1/17/02
SCALE: N.T.S.
DWG. BY: WLN
CHK. BY: RW
DRAWING NO.: S-2202
SHEET 4 OF 8

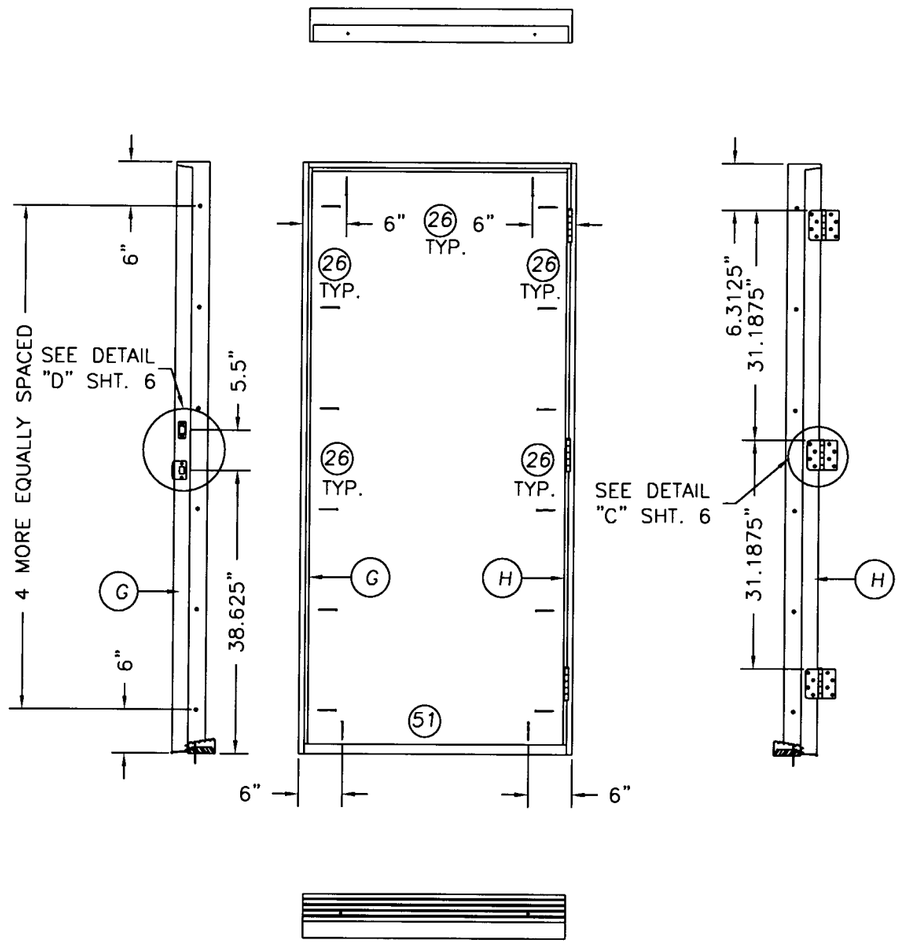

SINGLE DOOR

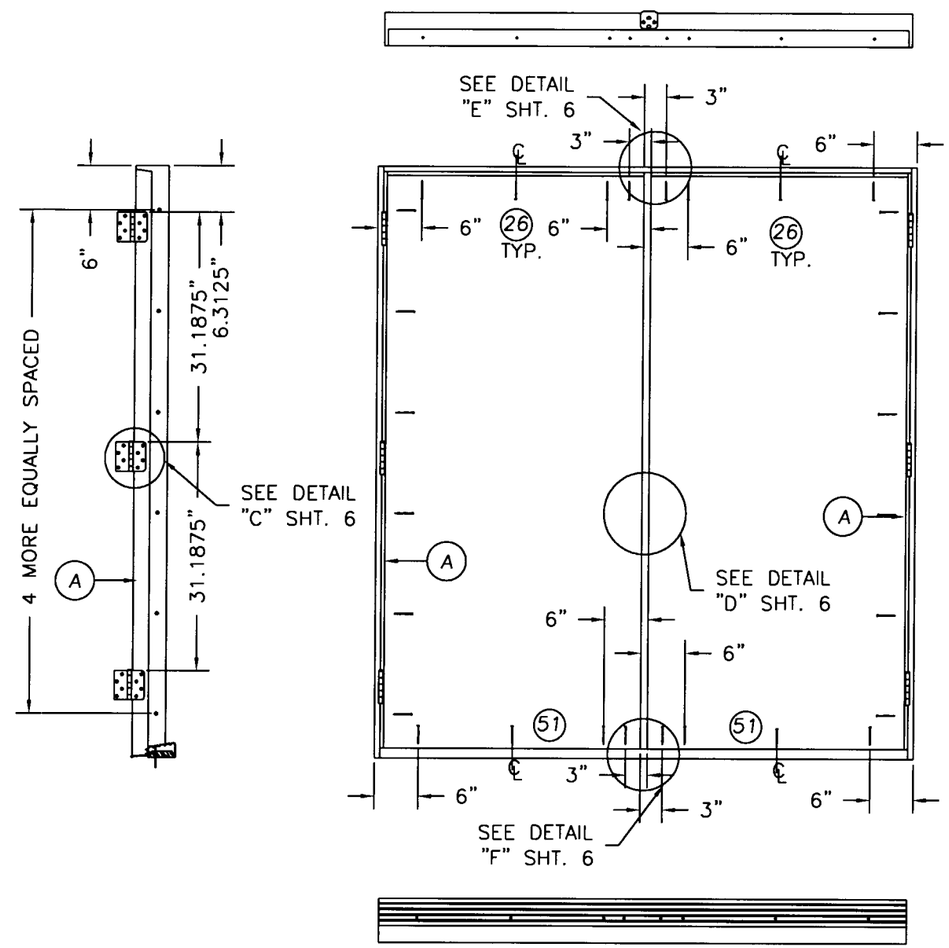

DOUBLE DOOR

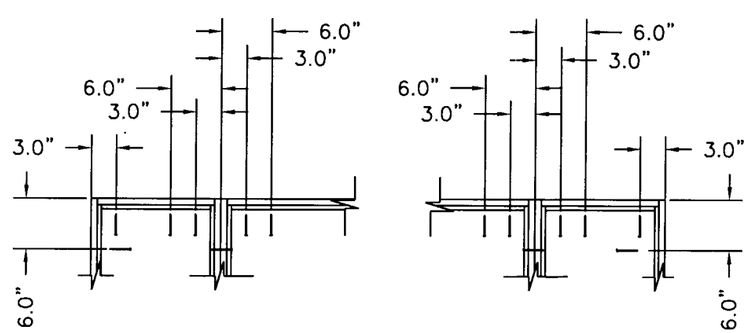

WHEN ATTACHING SIDELITE THE ABOVE ANCHORING APPLIES.

Approved as complying with the Florida Building Code
Date 12/26/02
NOA# 02-0418.03
Miami Dade Product Control Division
By Theodore Sherman

PREMDOR EXTERIOR DOOR PRODUCTS
1955 POWIS ROAD
WEST CHICAGO, IL. 60185
PH. (630) 584-6330

PRODUCT: EXTERIOR DOOR PRODUCT SINGLE & DOUBLE OUTSWING 6'8 GLAZED FIBERGLASS DOOR

PART OR ASSEMBLY: ANCHORING LOCATIONS

NO.	DATE	REVISIONS	BY
A	10/1/02	DOCUMENT REDRAWN	SWS

DATE: 1/17/02
SCALE: N.T.S.
DWG. BY: WLN
CHK. BY: RW
DRAWING NO.: S-2202
SHEET 5 OF 8

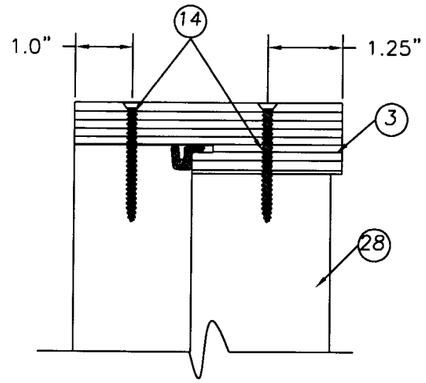

DETAIL "A" UNCLIPPED LAMINATED MULLION
ATTACHED TO CONTINUOUS HEADER

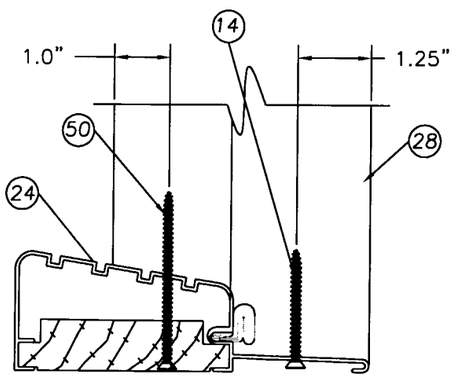

DETAIL "B' UNCLIPPED LAMINATED MULLION

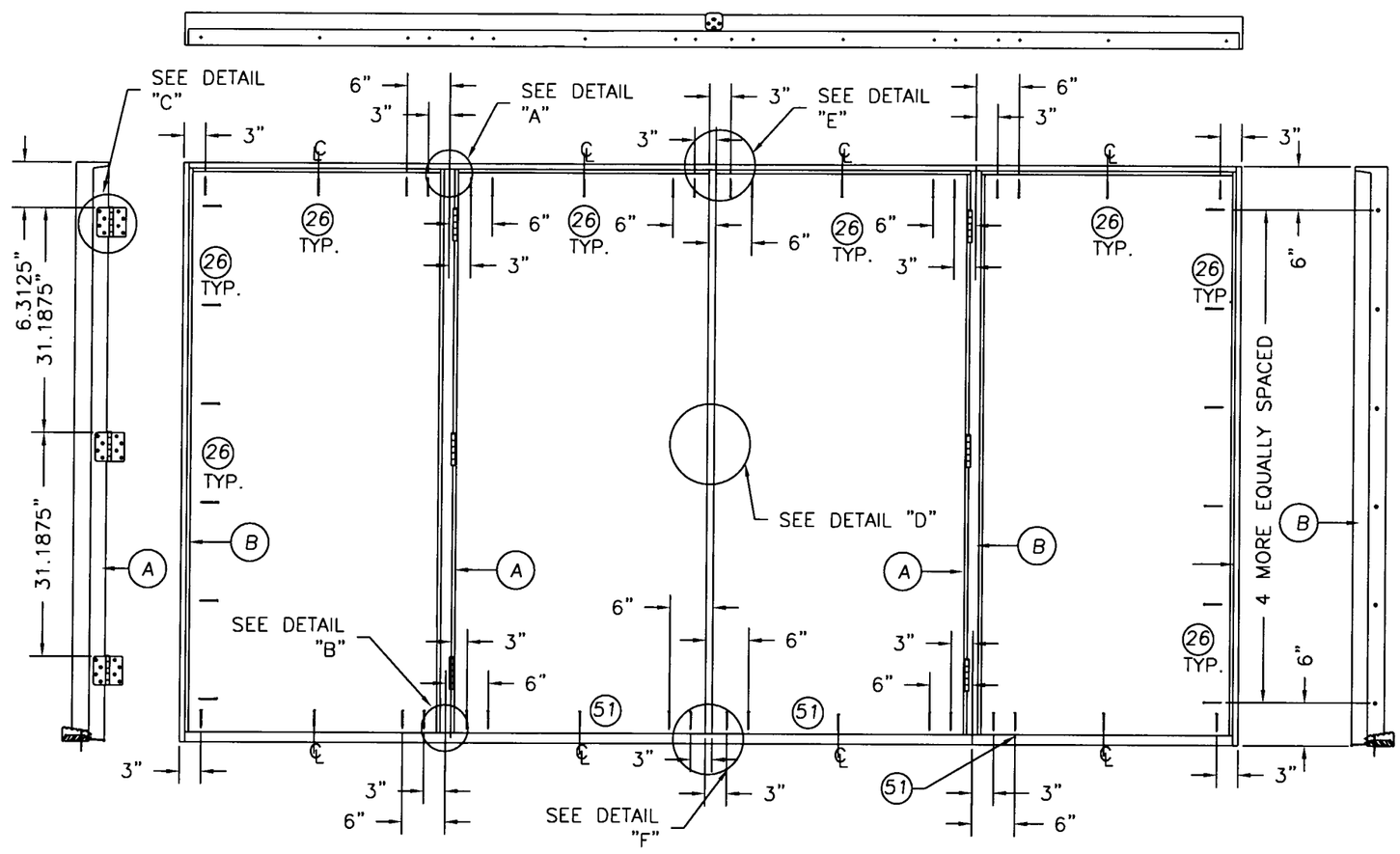

DOUBLE DOOR WITH (2) 3'0 SIDELITES

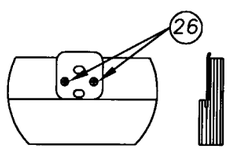

DETAIL "E" WINDJAMBER ASTRAGAL
ATTACH ASTRAGAL RETAINER BOLT
STRIKE PLATE TO FRAME
AS SHOWN.

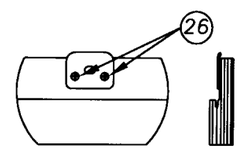

DETAIL "E" ENDURA ASTRAGAL
ATTACH ASTRAGAL RETAINER BOLT
STRIKE PLATE TO FRAME
AS SHOWN.

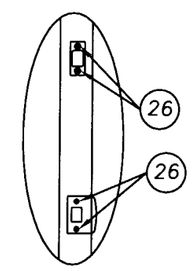

DETAIL "D"

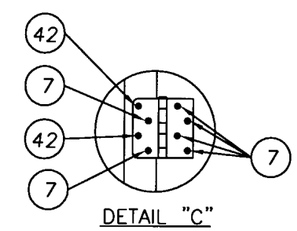

DETAIL "C"

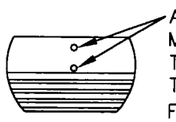

ASTRAGAL RETAINER BOLT HOLES
MUST BE DRILLED THROUGH
THE THRESHOLD & INTO THE
TEST BUCK DEEP ENOUGH
FOR A 2" THROW

DETAIL "F" WINDJAMBER ASTRAGAL

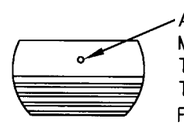

ASTRAGAL RETAINER BOLT HOLE
MUST BE DRILLED THROUGH
THE THRESHOLD & INTO THE
TEST BUCK DEEP ENOUGH
FOR A 1.375" THROW

DETAIL "F" ENDURA ASTRAGAL

Approved as complying with the
Florida Building Code
Date 12/26/02
NOA# 02-0418.03
Miami Dade Product Control
Division
By

PREMDOR EXTERIOR DOOR PRODUCTS
1955 POWIS ROAD
WEST CHICAGO, IL. 60185
PH. (630) 584-6330

PRODUCT: EXTERIOR DOOR PRODUCT
SINGLE & DOUBLE OUTSWING
6'8 GLAZED FIBERGLASS DOOR

PART OR ASSEMBLY: ANCHORING LOCATIONS & DETAILS

NO.	DATE	REVISIONS	DOCUMENT REDRAWN	BY
A	10/1/02		SWS	

DATE: 1/17/02
SCALE: N.T.S.
DWG. BY: WLN
CHK. BY: RW
DRAWING NO.: S-2202
SHEET 6 OF 8

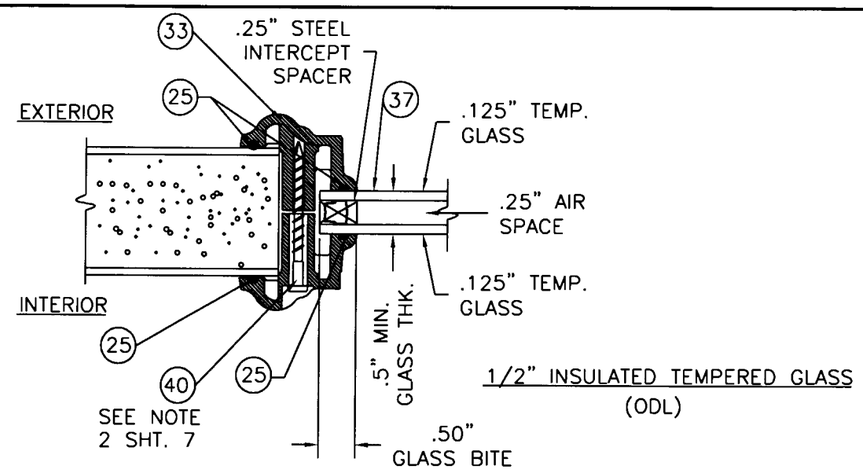

1/2" INSULATED TEMPERED GLASS
(ODL)

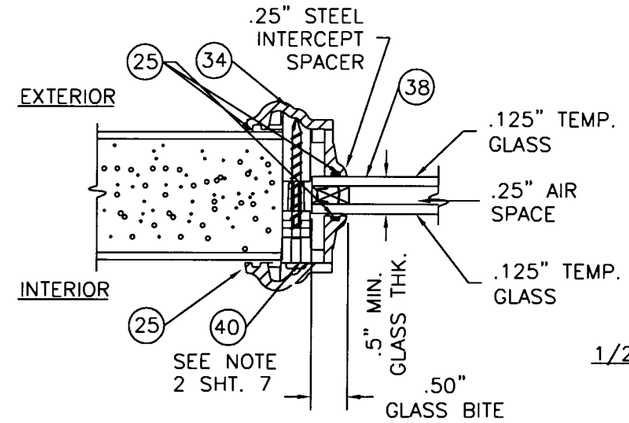

1/2" INSULATED TEMPERED GLASS
(RSL)

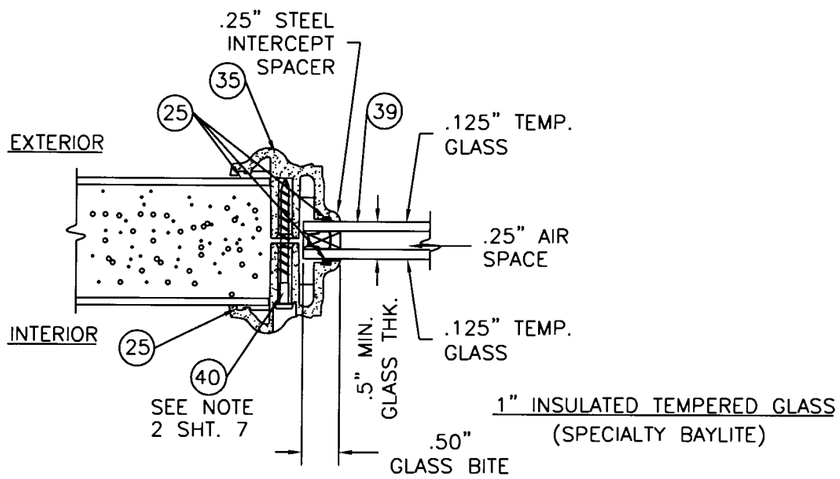

1" INSULATED TEMPERED GLASS
(SPECIALTY BAYLITE)

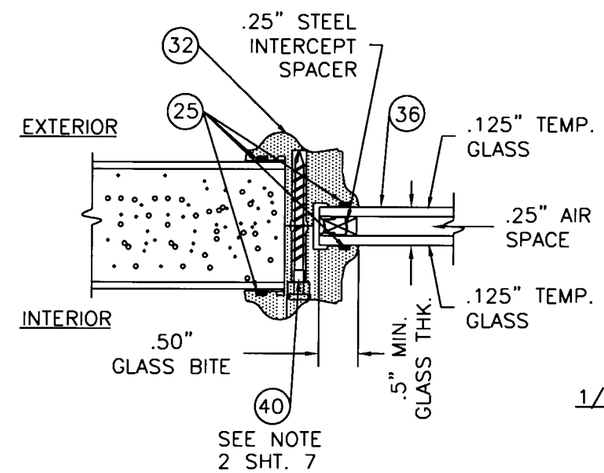

1/2" INSULATED TEMPERED GLASS
(TRINITY / AMPAC)

NOTES:

1. SPACING FOR ITEM #44 THE PIN NAIL ATTACHING THE SIDELITE TRIM IS AS FOLLOWS; TOP & BOTTOM (1) AT 2.0" FROM OUTSIDE CORNER WITH (3) MORE 3.75" O.C. SIDES FROM TOP DOWN; (1) AT 2.75" FROM VERTICAL CORNERS WITH (6) MORE AT 14.0" O.C. MAX.
2. SPACING FOR ITEM #40 WITH ITEM #32; TOP & BOTTOM (1) SCREW IN THE CENTER AND (1) 3.75 FROM EACH HORIZONTAL CORNER. TOP DOWN, 3.375", 10.75", 18.125", 25.5", 32.875", 40.25", 47.75", 55.125" & 62.5".SPACING FOR ITEM #40 WITH ITEM #33; TOP & BOTTOM (1) SCREW IN THE CENTER & (1) 3.25" FROM EACH HORIZONTAL CORNER. TOP DOWN 3.25", 13.75", 26.5", 39.25", 52.0", & 62.625".SPACING FOR ITEM #40 WITH #34, TOP & BOTTOM; (1) SCREW IN THE CENTER & (1) 3.75" FROM HORIZONTAL CORNERS. TOP DOWN, 4.5", 18.25", 33.0", 47.625" & 61.375". SPACING FOR ITEM #40 WITH ITEM 35, TOP AND BOTTOM (1) SCREW IN THE CENTER & (1) .75" FROM EACH HORIZONTAL CORNER. TOP DOWN 13.125", 26.25", 39.375" & 52.5".
3. THE SIDELITE IS HELD INTO THE FRAME IN THE 2 PIECE MULLION APPLICATION WITH ITEM #14 (#10 X 2") SPACING AS FOLLOWS; HEADER AND OUTSWING THRESHOLD; (1) SCREW 3.0" FROM EACH HORIZONTAL CORNER. IN THE INSWING APPLICATION USE ITEM #50 (#10 X 3") IN THE INSWING THRESHOLD. SIDES; (1) AT 6.0" FROM EACH VERTICAL CORNER WITH (4) MORE EQUALLY SPACED.
4. SPACING FOR ITEM #41 ATTACHING THE WINDJAMBER ASTRAGAL TO THE INACTIVE DOOR IS AS FOLLOWS; FROM THE BOTTOM UP; 1.0", 3.0", 5.0", 20.0", 38.75" & 57.75". FROM THE TOP DOWN; 1.0", 3.0" & 5.0".
5. SPACING FOR ITEM #49 ATTACHING THE ENDURA ASTRAGAL TO THE INACTIVE DOOR IS AS FOLLOWS FROM TOP DOWN: (2) SCREWS AT 3.0" DOWN AND .68" APART, 4.0", 11.0", 19.0", 27.0", 34.0", 44.0", 51.0", 58.875", 66.875", 73.875", & (2) AT 74.875" .68" APART. THERE IS (1) ADDITIONAL #8 x 1.75" DECK SCREW AT 51.75" DOWN FROM THE TOP. ALL THE SCREWS COMING DOWN THE ASTRAGAL ARE GERED EXCEPT FOR THE 1.75" SCREW, IT IS CENTERED ON THE ASTRAGAL.
6. THE SIDELITE IS HELD INTO THE FRAME IN THE 1PIECE MULLION APPLICATION WITH ITEM #14 SPACING AS FOLLOWS; HEADER AND THRESHOLD; (1) SCREW 3.0" FROM EACH HORIZONTAL CORNER. JAMB SIDE; (1) AT 6.0" FROM EACH VERTICAL CORNER WITH (4) MORE EQUALLY EQUALLY SPACED. AT THE HINGE MULLION THE SIDELITE IS HELD IN WITH (2) ITEM #42 AT EACH HINGE LOCATION. AT EACH STRIKE MULLION THE SIDELITE IS HELD IN WITH ITEM #42 SPACED 6.0" FROM TOP AND BOTTOM CORNERS WITH (4) MORE EQUALLY SPACED.

Approved as complying with the Florida Building Code
Date 12/26/02
NOA# 02-0416.03
Miami Dade Product Control Division
By Sheridan Bowman

PREMDOR EXTERIOR DOOR PRODUCTS
1955 POWIS ROAD
WEST CHICAGO, IL. 60185
PH. (630) 584-6330

PRODUCT: EXTERIOR DOOR PRODUCT SINGLE & DOUBLE OUTSWING 6'8 GLAZED FIBERGLASS DOOR

PART OR ASSEMBLY: GLAZING DETAILS & NOTES

NO.	DATE	REVISIONS	BY
A	10/1/02	DOCUMENT REDRAWN	SWS

DATE: 1/17/02
SCALE: N.T.S.
DWG. BY: WLN
CHK. BY: RW
DRAWING NO.: S-2202
SHEET 7 OF 8

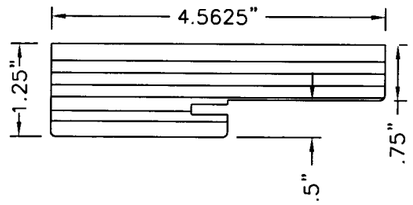

(3)(4)(5) LAM. LUMBER FRAME

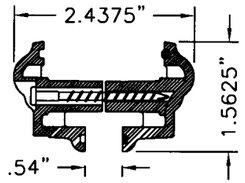

(33) LITE FRAME ODL
HP POLYPROPYLENE
(THERMOFIL-P6-30FM0391)

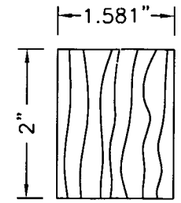

(15) LOCK BLOCK

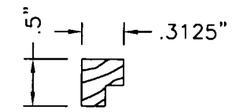

(43) SIDELITE WOOD TRIM

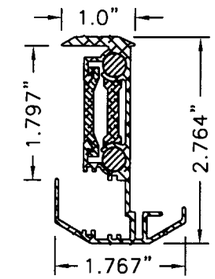

(29) ASTRAGAL HAS
(2) 8 .0"
BOLTS @ BOTTOM
& (2) 8.0"
BOLTS @ TOP

ASTRAGAL WINDJAMBER II
(WR68P T-6063 EXTRUDED ALUMINUM

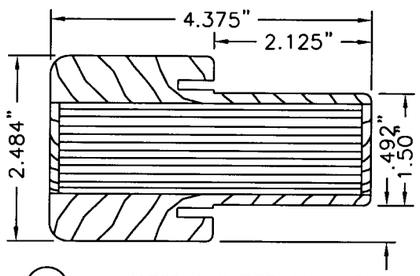

(28) LAMINATED LUMBER MULLION

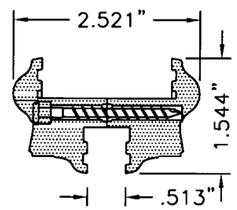

TRINITY/AMPAC
(32) .5" GLASS LITE FRAME
POLYPROPYLENE

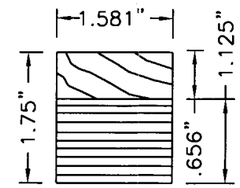

(8) LATCH & HINGE STILE
3-0 SL BLANK STILE
LAMINATED LUMBER W/PINE CAP

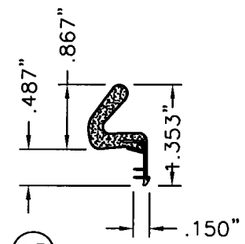

(13) WEATHERSRTIP
LOXCREEN LOXSEAL V-9650

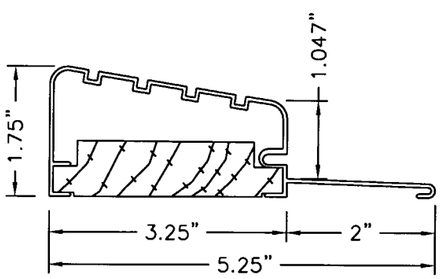

(23) IMPERIAL OUTSWING BUMP FACE ALUMINUM
THRESHOLD. (051" WALL THK.)

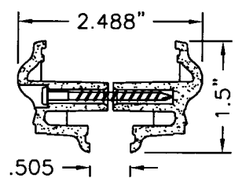

(35) SPECIALTY/BAYLITE
.5" GLASS LITE FRAME
POLYPROPYLENE

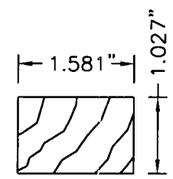

VIROLA

(11) DOOR TOP RAIL
(45) SIDELITE TOP RAIL
(46) 14" SIDELITE SIDE STILE
(47) 14" SIDELITE BOTTOM RAIL

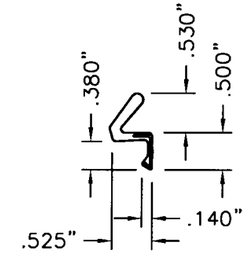

(10) WEATHERSRTIP
SCHLEGEL Q-LON QDS650

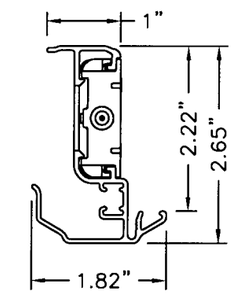

(30) ENDURA EXTRUDED ALUM.
ASTRAGAL .055" ALUM.

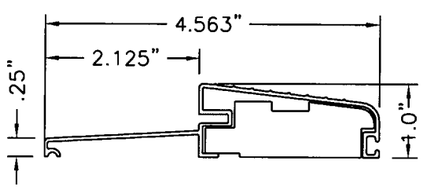

(24) OUTSWING BUMP THRESHOLD
.050" ALUM. BY WORLD WIDE

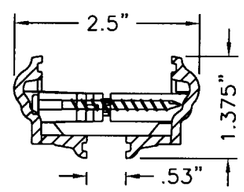

RSL
(34) .5" GLASS LITE FRAME
PVC

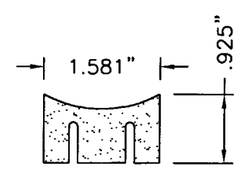

(12) DOOR BOTTOM RAIL &
3-0 SL BOTTOM RAIL
WOOD COMPOSITE

Approved as complying with the
Florida Building Code
Date 12/26/02
NOA# 02-0418.03
Miami Dade Product Control
Division
By [signature]

PREMDOR EXTERIOR DOOR PRODUCTS
1955 POWIS ROAD
WEST CHICAGO, IL. 60185
PH. (630) 584-6330

PRODUCT: EXTERIOR DOOR PRODUCT
SINGLE AND DOUBLE OUTSWING
6'8 GLAZED FIBERGLASS DOOR

PART OR ASSEMBLY: UNIT COMPONENTS

REVISIONS

NO.	DATE	BY
A	10/1/02	SWS

DOCUMENT REDRAWN
DESCRIPTION FOR
ITEM #33 CHANGED

DATE: 1/17/02
SCALE: N.T.S.
DWG. BY: WLN
CHK. BY: RW
DRAWING NO.: S-2202
SHEET 8 OF 8