MIAMI-DADE

BUILDING CODE COMPLIANCE OFFICE (BCCO)
PRODUCT CONTROL DIVISION

MIAMI-DADE COUNTY, FLORIDA
METRO-DADE FLAGLER BUILDING
140 WEST FLAGLER STREET, SUITE 1603
MIAMI, FLORIDA 33130-1563
(305) 375-2901 FAX (305) 375-2908

NOTICE OF ACCEPTANCE (NOA)

Roller Star Corporation
6351 NW 28 Way, Suite C
Fort Lauderdale, FL 33309

SCOPE:

This NOA is being issued under the applicable rules and regulations governing the use of construction materials. The documentation submitted has been reviewed by Miami-Dade County Product Control Division and accepted by the Board of Rules and Appeals (BORA) to be used in Miami Dade County and other areas where allowed by the Authority Having Jurisdiction (AHJ).

This NOA shall not be valid after the expiration date stated below. The Miami-Dade County Product Control Division (In Miami Dade County) and/or the AHJ (in areas other than Miami Dade County) reserve the right to have this product or material tested for quality assurance purposes. If this product or material fails to perform in the accepted manner, the manufacturer will incur the expense of such testing and the AHJ may immediately revoke, modify, or suspend the use of such product or material within their jurisdiction. BORA reserves the right to revoke this acceptance, if it is determined by Miami-Dade County Product Control Division that this product or material fails to meet the requirements of the applicable building code.

This product is approved as described herein, and has been designed to comply with the High Velocity Hurricane Zone of the Florida Building Code.

DESCRIPTION: RE-1000

APPROVAL DOCUMENT: Drawing No. 01-057R, titled "RE 1000 Extruded Aluminum Roll Shutter", sheets 1 through 14 of 14, prepared, by EngCo, Inc., dated 08/05/01, bearing the Miami-Dade County Product Control Approval stamp with the Notice of Acceptance number and approval date by the Miami-Dade County Product Control Division.

MISSILE IMPACT RATING: Large and Small Missile Impact

LABELING: Each unit shall bear a permanent label with the manufacturer's name or logo, city, state and following statement: "Miami-Dade County Product Control Approved", unless otherwise noted herein.

RENEWAL of this NOA shall be considered after a renewal application has been filed and there has been no change in the applicable building code negatively affecting the performance of this product.

TERMINATION of this NOA will occur after the expiration date or if there has been a revision or change in the materials, use, and/or manufacture of the product or process. Misuse of this NOA as an endorsement of any product, for sales, advertising or any other purposes shall automatically terminate this NOA. Failure to comply with any section of this NOA shall be cause for termination and removal of NOA.

ADVERTISEMENT: The NOA number preceded by the words Miami-Dade County, Florida, and followed by the expiration date may be displayed in advertising literature. If any portion of the NOA is displayed, then it shall be done in its entirety.

INSPECTION: A copy of this entire NOA shall be provided to the user by the manufacturer or its distributors and shall be available for inspection at the job site at the request of the Building Official.

This NOA **revises NOA # 01-0424.02** and, consists of this page 1 as well as approval document mentioned above. The submitted documentation was reviewed by **Raul Rodriguez.**

PRODUCT CONTROL ACCEPTED

ROLL SHUTTER RE 1000

GENERAL NOTES:

1- DEFINITION: This product is an aluminum rolling type shutter, designed, constructed and erected to easily enclose an area, providing protection from Hurricane force winds within the allowable designed pressures and limitation stated in this approval.

2- CODE: This product has been tested and designed in accordance with the South Florida Building Code, 1994 Dade County Edition, under Chapters 23 and 35.

3- POSTING: A permanent legible decal shall be placed at readily visible location reading the following:

'RE 1000 SERIES ROLL SHUTTER
ROLLER STAR
FT. LAUDERDALE - FLORIDA
DADE COUNTY PRODUCT CONTROL APPROVED'

4- LOADS: Each installation must meet the design load calculated by a professional Engineer. The designed load MUST comply with chapter 23 (SFBC - Section 2309) and ASCE 7-88 (Section 6). Basic wind speed = 110 mph.

5- MATERIAL: All aluminum structure and components shall be designed as per section 30 of the SFBC. Shutter aluminum extruded shapes shall be 6063-T5 or as noted. Tubular shapes used as storm bars, headers and mullions shall be 6063-T6.

6- FASTENERS: Assembly screws and anchors shall be as specified at current set of drawings. Installation and loads as per this approval.

INDEX:

SHEET 1 of 14 - COVER SHEET, INDEX, GENERAL NOTES
SHEET 2 of 14 - SHUTTER COMPONENTS
SHEET 3 of 14 - SLATS WINDLOAD & DEFLECTIONS (TABLES 1.3, 2.3, 3.3)
SHEET 4 of 14 - GUIDE RAILS MOUNTING OPTIONS
SHEET 5 of 14 - STORM BARS SELECTION & DEFLECTION TABLE
SHEET 6 of 14 - STORM BARS SELECTION & DEFLECTION TABLE
SHEET 7 of 14 - STORM BARS ANCHORING TABLES
SHEET 8 of 14 - HEADER SELECTION & DEFLECTION TABLES
SHEET 9 of 14 - HEADER SELECTION & DEFLECTION TABLES
SHEET 10 of 14 - HEADER ANCHORING TABLES
SHEET 11 of 14 - MULLION SELECTION TABLE
SHEET 12 of 14 - MULLION ANCHORING TABLES
SHEET 13 of 14 - HOOD ASSEMBLY
SHEET 14 of 14 - COMBINED DEFLECTION ON MULTIPLE SPANS SHUTTERS

APPROVED AS COMPLYING WITH THE SOUTH FLORIDA BUILDING CODE
DATE OCT 0 4 2001
BY
PRODUCT CONTROL DIVISION
BUILDING CODE COMPLIANCE OFFICE
ACCEPTANCE NO. 01-0424.02

Manufacturer:
Roller Star
6351 NW 28th WAY
FT. LAUDERDALE,
FLORIDA - 33309
Tel.: (954) 972-4772

Product:
RE1000
EXTRUDED ALUMINUM ROLL SHUTTERS

Engineering:
EngCo Inc.
CA 8116
6971 W. Sunrise Blvd. 104
Plantation, Fl. 33313
Tel.: (954) 585-0304

AUG 0 7 2001

Engineer Seal
Pedro De Figueiredo
PE 52609

Date: 8/5/01
Scale: 1:1
Design by: PPMF

Dade County NOA:
PRODUCT REVISED
as complying with the Florida Buiding Code
Acceptance No. 02-0419.01
Expiration Date 10/04/06
By
Miami Dade Product Control Division

Drawing Number
01-057R

SHUTTER COMPONENTS

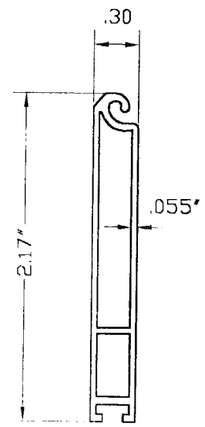

BAS*AT1 - End Slat
6063-T5

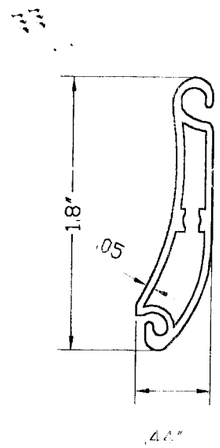

RE 1000 - Female Slat
6063-T5

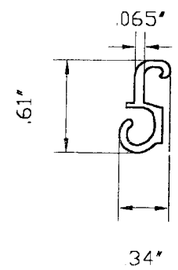

RE 1000 - Male Slat
6063-T5

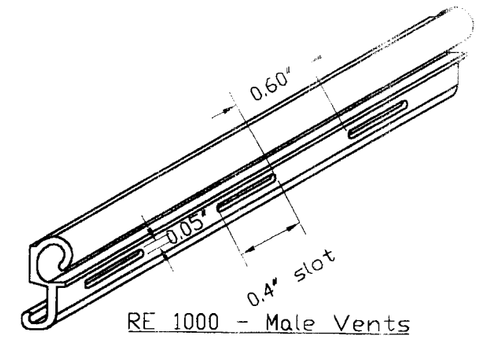

RE 1000 - Male Vents

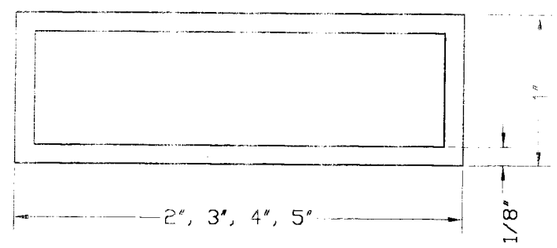

Std 1x Aluminum Tube
6063-T6

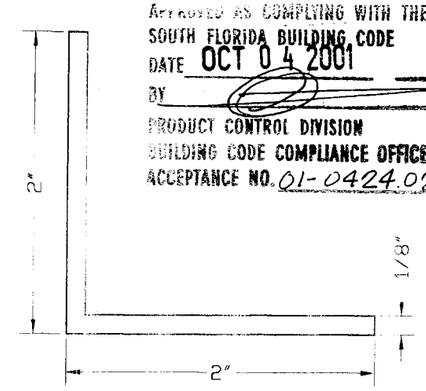

Std 2x2 Aluminum Angle
6063-T6

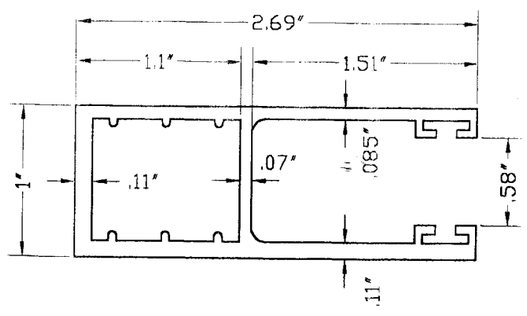

GUI*HSU - Guide Rail
6063-T5

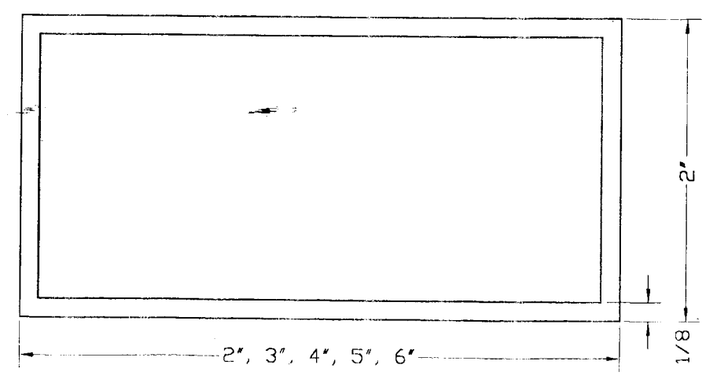

Std 2x Aluminum Tube
6063-T6

APPROVED AS COMPLYING WITH THE
SOUTH FLORIDA BUILDING CODE
DATE OCT 04 2001
BY
PRODUCT CONTROL DIVISION
BUILDING CODE COMPLIANCE OFFICE
ACCEPTANCE NO. 01-0424.02

Manufacturer:
Roller Star
6351 NW 28th WAY
FT. LAUDERDALE,
FLORIDA 33309
Tel: (954) 972-4772

Product:
RE1000
EXTRUDED ALUMINUM
ROLL SHUTTERS

Engineering:
EngCo Inc.
CA 8116
6971 W. Sunrise Blvd. 104
Plantation, Fl. 33313
Tel: (954) 585-0304

AUG 07 2001

Engineer Seal
Pedro De Figueiredo
PE 52609

Date: 8/5/01
Scale: 1:1
Design by: PPMF

Dade County NOA:
PRODUCT REVISED
as complying with the Florida
Buiding Code
Acceptance No. 02-0419.01
Expiration Date 10/04/06
By
Miami Dade Product Control
Division

Drawing Number
01-057R

Sheet
2 of 14

SLATS WINDLOAD DESIGN TABLES

TABLE 1.3
MAXIMUM INSIDE TRACK (TT)
RE 1000 SHUTTER SLAT

PD	1 SPAN	2 SPAN	3 SPAN
30	65	133	200
45	58	133	200
55	54	133	196
65	51	133	193
75	49	128	187
85	47	120	174
95	45	114	168
105	44	108	162
115	43	103	157
125	41	99	153
135	40	96	149
145	39	93	146
155	38	90	143
165	38	88	140
175	37	84	137
185	36	81	134
195	36	79	132
255	33	69	115

PD= Design load in Psf
Max. Deflection= min. of span/30 or 2"
Spans are indicated in inches

TABLE 2.3
SLAT DEFLECTION FOR 2 SPAN SHUTTERS

	SHUTTER SPAN							
Pd	66	60	54	48	42	36	30	24
30	0.89	0.61	0.40	0.25	0.15	0.08	0.04	0.02
45	1.33	0.91	0.60	0.37	0.22	0.12	0.06	0.02
55	1.63	1.11	0.73	0.46	0.27	0.14	0.07	0.03
65	1.92	1.31	0.86	0.54	0.32	0.17	0.08	0.03
75	-	1.52	0.99	0.62	0.36	0.20	0.09	0.04
85	-	1.72	1.13	0.70	0.41	0.22	0.11	0.04
95	-	-	1.26	0.78	0.46	0.25	0.12	0.05
105	-	-	1.39	0.87	0.51	0.27	0.13	0.05
115	-	-	1.52	0.95	0.56	0.30	0.15	0.06
125	-	-	1.66	1.03	0.61	0.33	0.16	0.06
135	-	-	1.79	1.12	0.65	0.35	0.17	0.07
145	-	-	-	1.22	0.70	0.38	0.18	0.07
155	-	-	-	1.31	0.75	0.41	0.20	0.08
165	-	-	-	1.41	0.80	0.43	0.21	0.09
175	-	-	-	1.51	0.85	0.46	0.22	0.09
185	-	-	-	1.61	0.91	0.49	0.23	0.10
195	-	-	-	-	0.97	0.52	0.25	0.10
255	-	-	-	-	1.34	0.67	0.32	0.13

TABLE 3.3
SLAT DEFLECTION FOR 3 SPAN SHUTTERS

	SHUTTER SPAN							
Pd	66	60	54	48	42	36	30	24
30	1.13	0.77	0.51	0.32	0.19	0.10	0.05	0.02
45	1.70	1.16	0.76	0.48	0.28	0.15	0.07	0.03
55	-	1.42	0.93	0.58	0.34	0.18	0.09	0.04
65	-	1.68	1.10	0.69	0.40	0.22	0.10	0.04
75	-	1.93	1.27	0.79	0.46	0.25	0.12	0.05
85	-	-	1.44	0.90	0.53	0.28	0.14	0.06
95	-	-	1.61	1.00	0.59	0.32	0.15	0.06
105	-	-	1.78	1.11	0.65	0.35	0.17	0.07
115	-	-	-	1.22	0.71	0.38	0.19	0.08
125	-	-	-	1.32	0.77	0.42	0.20	0.08
135	-	-	-	1.43	0.84	0.45	0.22	0.09
145	-	-	-	1.53	0.90	0.48	0.23	0.10
155	-	-	-	-	0.96	0.52	0.25	0.10
165	-	-	-	-	1.02	0.55	0.27	0.11
175	-	-	-	-	1.08	0.59	0.28	0.11
185	-	-	-	-	1.15	0.62	0.30	0.12
195	-	-	-	-	1.21	0.65	0.31	0.13
255	-	-	-	-	-	0.85	0.41	0.17

Deflections are indicated in inches

(GS) GLASS SEPARATION:	
LARGE MISSILE IMPACT	WIND LOAD ONLY
4 7/8" -48"<=SPAN<=66 5/8" 4" -30"<SPAN<48" 3 1/2" -SPAN<=30"	3" ALL CONDITIONS

GLASS SEPARATION FOR LARGE MISSILE IMPACT IS APPLICABLE FOR INSTALLATION UP TO 30 FT. OF GRADE DUE TO LARGE MISSILE IMPACT. WIND LOAD GLASS SEPARATION APPLIES TO INSTALLATION ABOVE 30 FT. OF GRADE.

APPROVED AS COMPLYING WITH THE SOUTH FLORIDA BUILDING CODE
DATE OCT 0 4 2001
BY
PRODUCT CONTROL DIVISION
BUILDING CODE COMPLIANCE OFFICE
ACCEPTANCE NO. 01-0424.02

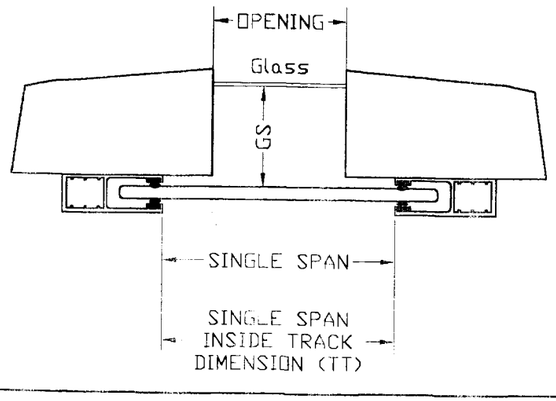

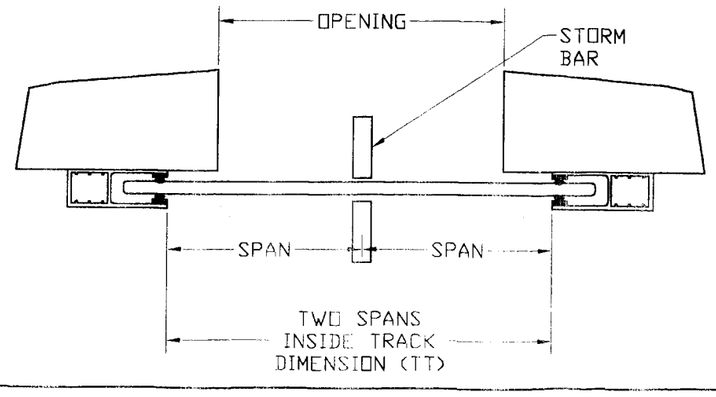

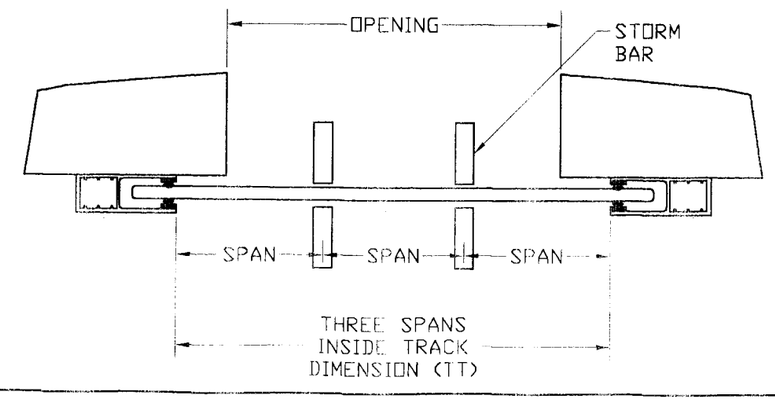

Manufacturer:
Roller Star
6351 NW 28th WAY
FT. LAUDERDALE
FLORIDA 33309
Tel: (954) 972-4772

Product:
RE1000
EXTRUDED ALUMINUM
ROLL SHUTTERS

Engineering:
EngCo Inc.
CA 8116
6971 W. Sunrise Blvd. 104
Plantation, Fl. 33313
Tel: (954) 585-0304

AUG 0 7 2001

Engineer Seal
Pedro De Figueiredo
PE 52609

Date: 8/5/01
Scale: 1:1
Design by: PPMF

Dade County NOA:
PRODUCT REVISED
as complying with the Florida Buiding Code
Acceptance No. 02-0419.01
Expiration Date 10/04/06
By
Miami Dade Product Control Division

Drawing Number
01-057R

GUIDE RAILS MOUNTING OPTIONS

MOUNT: WALL

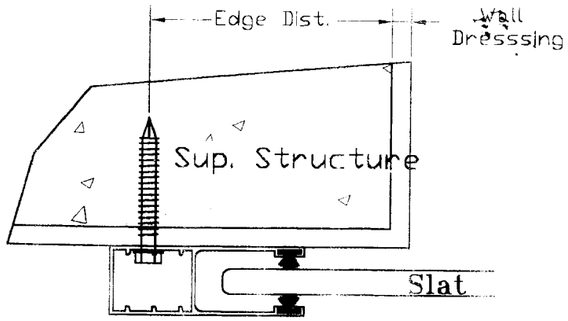

DESIGNED PRESSURES

	ANCHOR SPACING			
TRACK	12	9	6	3
ANCHOR A	75	125	215	<255
ANCHOR B	na	30	65	<195
ANCHOR C	85	135	195	<255

MOUNT: INSET

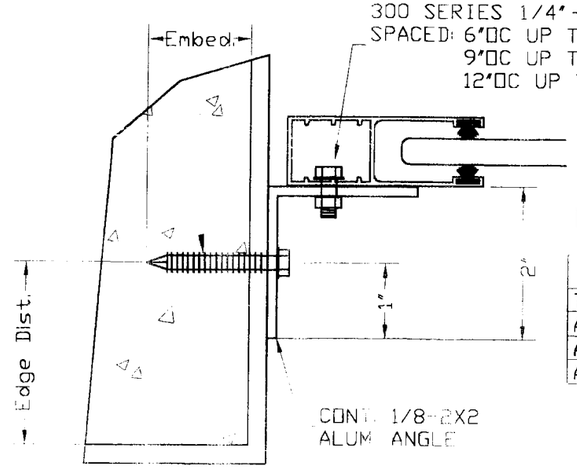

DESIGNED PRESSURES

	ANCHOR SPACING			
TRACK	12	9	6	3
ANCHOR A	95	145	<255	-
ANCHOR B	30	45	95	<255
ANCHOR C	65	95	185	<255

MOUNT: BUILT-OUT

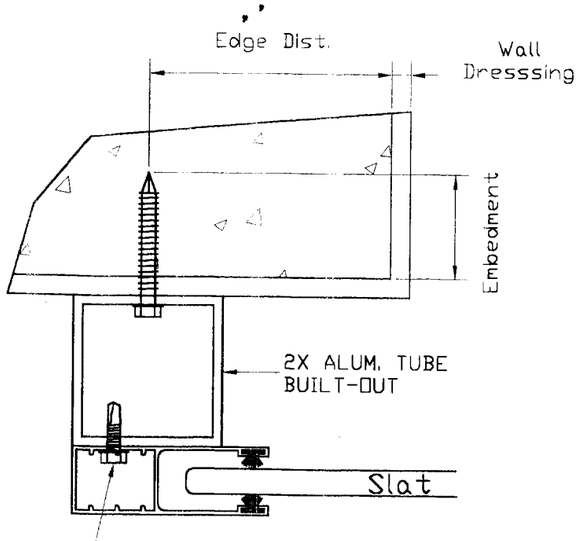

#10-3/4" DRILL-FLEX
BY ELCO SPACED:
6"OC/210 PSF
9"OC/147 PSF
12"OC/96 PSF

DESIGNED PRESSURES

	ANCHOR SPACING			
TRACK	12	9	6	3
ANCHOR A	165	<255	-	-
ANCHOR B	45	75	145	<255
ANCHOR C	175	<255	-	-

ANCHOR SCHEDULE

Type	Description	Embedment	Substract	Manufacturer
A	1/4" Tapcon	1 3/4"	Concrete	Elco
B	1/4" Tapcon	1 1/4"	Hollow Block	Elco
C	#14 SS Wood Screws	1 1/2"	Wood (SG=.55)	Elco

EDGE DISTANCE =3"

ANCHORAGE NOTE: ANCHOR SPACING IS CONTROLLED BY THE SPAN VS PRESSURE TABLES ON SHEET 3 OF 14

APPROVED AS COMPLYING WITH THE SOUTH FLORIDA BUILDING CODE
DATE OCT 0 4 2001
BY
PRODUCT CONTROL DIVISION
BUILDING CODE COMPLIANCE OFFICE
ACCEPTANCE NO. 01-0424.02

Manufacturer:
Roller Star
6351 NW 28th WAY
FT. LAUDERDALE,
FLORIDA 33309
Tel. (954) 972-4772

Product:
RE1000
EXTRUDED ALUMINUM ROLL SHUTTERS

Engineering:
EngCo Inc.
CA 8116
6971 W. Sunrise Blvd. 104
Plantation, Fl. 33313
Tel. (954) 585-0304

AUG 0 7 2001

Engineer Seal
Pedro De Figueiredo
PE 52609

Date: 8/5/01
Scale: 1:1
Design by: PPMF

Dade County NOA:
PRODUCT REVISED
as complying with the Florida Building Code
Acceptance No 02-0419.01
Expiration Date 10/04/06
By
Miami Dade Product Control Division

Drawing Number
01-057R

STORM BAR SELECTION AND DEFLECTION TABLES

1/8 2X2 STORM BAR

MAXIMUM ALLOWABLE
STORM BAR HEIGHT
2 SPANS SHUTTER

	SHUTTER SPAN							
Pd	66	60	54	48	42	36	30	24
30	71	75	79	83	89	96	101	107
45	58	61	64	68	73	79	86	96
55	52	55	58	61	66	71	78	87
65	48	50	53	57	60	65	72	80
75	45	47	50	53	56	61	67	75
85	42	44	46	49	53	57	63	70
95	40	42	44	47	50	54	59	66
105	38	40	42	44	47	51	56	63
115	36	38	40	42	45	49	54	60
125	35	36	38	41	43	47	51	58
135	33	35	37	39	42	45	50	55
145	32	34	35	38	40	44	48	53
155	31	33	34	36	39	42	46	52
165	30	32	33	35	38	41	45	50
175	29	31	32	34	37	40	43	49
185	28	30	31	33	36	39	42	47
195	27	29	31	32	35	38	41	46
255	21	23	25	28	30	33	36	40

MAXIMUM ALLOWABLE
STORM BAR HEIGHT
3 SPANS SHUTTER

	SHUTTER SPAN							
Pd	66	60	54	48	42	36	30	24
30	76	80	84	89	95	100	105	111
45	62	65	68	73	78	84	92	100
55	56	59	62	66	70	76	83	93
65	47	52	57	60	64	70	76	85
75	41	45	50	56	60	65	71	80
85	36	39	44	49	56	61	67	75
95	32	35	39	44	51	58	63	71
105	29	32	35	40	46	53	60	67
115	26	29	32	36	42	49	57	64
125	24	27	30	33	38	45	54	61
135	22	25	27	31	35	41	50	59
145	21	23	26	29	33	39	46	57
155	19	21	24	27	31	36	43	54
165	18	20	22	25	29	34	41	51
175	17	19	21	24	27	32	38	48
185	16	18	20	22	26	30	36	45
195	15	17	19	21	24	28	34	43
255	12	13	14	16	19	22	26	33

STORM BAR MAXIMUM DEFLECTION
2 SPANS SHUTTER

	SHUTTER SPAN							
Pd	66	60	54	48	42	36	30	24
30	1.0	1.2	1.3	1.4	1.6	1.9	1.9	1.9
45	0.7	0.8	0.8	0.9	1.1	1.3	1.5	1.9
55	0.5	0.6	0.7	0.8	0.9	1.0	1.3	1.6
65	0.5	0.5	0.6	0.7	0.7	0.9	1.1	1.3
75	0.4	0.5	0.5	0.6	0.6	0.8	0.9	1.2
85	0.4	0.4	0.4	0.5	0.6	0.7	0.8	1.0
95	0.3	0.4	0.4	0.5	0.5	0.6	0.7	0.9
105	0.3	0.3	0.4	0.4	0.4	0.5	0.6	0.8
115	0.3	0.3	0.3	0.4	0.4	0.5	0.6	0.7
125	0.3	0.3	0.3	0.3	0.4	0.5	0.5	0.7
135	0.2	0.2	0.3	0.3	0.4	0.4	0.5	0.6
145	0.2	0.2	0.2	0.3	0.3	0.4	0.5	0.6
155	0.2	0.2	0.2	0.3	0.3	0.4	0.4	0.6
165	0.2	0.2	0.2	0.2	0.3	0.3	0.4	0.5
175	0.2	0.2	0.2	0.2	0.3	0.3	0.4	0.5
185	0.2	0.2	0.2	0.2	0.3	0.3	0.4	0.4
195	0.1	0.2	0.2	0.2	0.3	0.3	0.3	0.4
255	0.1	0.1	0.1	0.2	0.2	0.2	0.3	0.3

STORM BAR MAXIMUM DEFLECTION
3 SPANS SHUTTER

	SHUTTER SPAN							
Pd	66	60	54	48	42	36	30	24
30	1.2	1.3	1.5	1.6	1.9	2.0	2.0	2.0
45	0.8	0.9	0.9	1.1	1.3	1.5	1.7	2.0
55	0.6	0.7	0.8	0.9	1.0	1.2	1.4	1.8
65	0.4	0.5	0.7	0.7	0.8	1.0	1.2	1.5
75	0.3	0.3	0.5	0.6	0.7	0.9	1.0	1.3
85	0.2	0.2	0.3	0.4	0.6	0.8	0.9	1.2
95	0.1	0.2	0.2	0.3	0.5	0.7	0.8	1.0
105	0.1	0.1	0.2	0.2	0.4	0.5	0.7	0.9
115	0.1	0.1	0.1	0.2	0.3	0.4	0.7	0.8
125	0.0	0.1	0.1	0.1	0.2	0.3	0.6	0.8
135	0.0	0.1	0.1	0.1	0.2	0.2	0.5	0.7
145	0.0	0.0	0.1	0.1	0.1	0.2	0.4	0.7
155	0.0	0.0	0.1	0.1	0.1	0.2	0.3	0.6
165	0.0	0.0	0.0	0.1	0.1	0.1	0.3	0.5
175	0.0	0.0	0.0	0.1	0.1	0.1	0.2	0.4
185	0.0	0.0	0.0	0.0	0.1	0.1	0.2	0.3
195	0.0	0.0	0.0	0.0	0.0	0.1	0.1	0.3
255	0.0	0.0	0.0	0.0	0.0	0.0	0.1	0.1

DEFLECTION IN INCHES BASED ON MAX. STORM BAR HEIGHT
STORM BAR HEIGHT IN INCHES
Pd- DESIGNED PRESSURE IN PSF
SHUTTER SPAN IN INCHES

1/8 2X3 STORM BAR

MAXIMUM ALLOWABLE
STORM BAR HEIGHT
2 SPANS SHUTTER

	SHUTTER SPAN							
Pd	66	60	54	48	42	36	30	24
30	95	100	105	111	119	120	120	120
45	77	81	86	91	97	105	115	120
55	70	73	77	82	88	95	104	116
65	61	65	71	75	81	87	96	107
75	60	63	66	70	75	81	89	100
85	56	59	62	66	71	76	84	93
95	53	56	59	62	67	72	79	88
105	50	53	56	59	63	69	75	84
115	47	51	53	57	61	65	72	80
125	43	47	51	54	58	63	69	77
135	40	44	49	52	56	60	66	74
145	37	41	45	50	54	58	64	71
155	35	38	42	48	52	56	62	69
165	32	36	40	45	50	55	60	67
175	31	34	37	42	48	53	58	65
185	29	32	35	40	46	52	56	63
195	27	30	34	38	43	50	55	62
255	21	23	26	29	33	39	46	54

MAXIMUM ALLOWABLE
STORM BAR HEIGHT
3 SPANS SHUTTER

	SHUTTER SPAN							
Pd	66	60	54	48	42	36	30	24
30	101	106	112	119	120	120	120	120
45	68	75	83	94	104	112	120	120
55	56	61	68	77	88	101	111	120
65	47	52	58	65	74	87	102	114
75	41	45	50	56	64	75	90	106
85	36	39	44	49	57	66	79	99
95	32	35	39	44	51	59	71	89
105	29	32	35	40	46	53	64	80
115	26	29	32	36	42	49	58	73
125	24	27	30	33	38	45	54	67
135	22	25	27	31	35	41	50	62
145	21	23	26	29	33	39	46	58
155	19	21	24	27	31	36	43	54
165	18	20	22	25	29	34	41	51
175	17	19	21	24	27	32	38	48
185	16	18	20	22	26	30	36	45
195	15	17	19	21	24	28	34	43
255	12	13	14	16	19	22	26	33

STORM BAR MAXIMUM DEFLECTION
2 SPANS SHUTTER

	SHUTTER SPAN							
Pd	66	60	54	48	42	36	30	24
30	1.2	1.4	1.5	1.7	1.9	1.7	1.4	1.1
45	0.8	0.9	1.0	1.1	1.3	1.5	1.8	1.7
55	0.7	0.7	0.8	0.9	1.1	1.2	1.5	1.8
65	0.6	0.6	0.7	0.8	0.9	1.0	1.3	1.6
75	0.5	0.5	0.6	0.7	0.8	0.9	1.1	1.4
85	0.4	0.5	0.5	0.6	0.7	0.8	1.0	1.2
95	0.4	0.4	0.5	0.5	0.6	0.7	0.9	1.1
105	0.3	0.4	0.4	0.5	0.5	0.7	0.8	1.0
115	0.3	0.4	0.4	0.4	0.5	0.6	0.7	0.9
125	0.2	0.3	0.4	0.4	0.5	0.5	0.7	0.8
135	0.2	0.2	0.3	0.4	0.4	0.5	0.6	0.7
145	0.1	0.2	0.2	0.3	0.4	0.5	0.6	0.7
155	0.1	0.1	0.2	0.3	0.4	0.4	0.5	0.6
165	0.1	0.1	0.2	0.2	0.3	0.4	0.5	0.6
175	0.1	0.1	0.1	0.2	0.3	0.4	0.5	0.6
185	0.1	0.1	0.1	0.2	0.3	0.4	0.4	0.5
195	0.1	0.1	0.1	0.2	0.2	0.3	0.4	0.5
255	0.0	0.0	0.0	0.1	0.1	0.2	0.3	0.4

STORM BAR MAXIMUM DEFLECTION
3 SPANS SHUTTER

	SHUTTER SPAN							
Pd	66	60	54	48	42	36	30	24
30	1.4	1.5	1.7	2.0	1.8	1.5	1.3	1.0
45	0.4	0.6	0.8	1.1	1.5	1.7	1.9	1.5
55	0.2	0.3	0.4	0.6	0.9	1.4	1.7	1.9
65	0.1	0.2	0.3	0.4	0.6	0.9	1.4	1.8
75	0.1	0.1	0.2	0.2	0.4	0.6	1.0	1.5
85	0.1	0.1	0.1	0.2	0.3	0.4	0.7	1.3
95	0.0	0.1	0.1	0.1	0.2	0.3	0.5	1.0
105	0.0	0.0	0.1	0.1	0.1	0.2	0.4	0.7
115	0.0	0.0	0.0	0.1	0.1	0.2	0.3	0.5
125	0.0	0.0	0.0	0.0	0.1	0.1	0.2	0.4
135	0.0	0.0	0.0	0.0	0.1	0.1	0.2	0.3
145	0.0	0.0	0.0	0.0	0.0	0.1	0.1	0.3
155	0.0	0.0	0.0	0.0	0.0	0.1	0.1	0.2
165	0.0	0.0	0.0	0.0	0.0	0.1	0.1	0.2
175	0.0	0.0	0.0	0.0	0.0	0.0	0.1	0.2
185	0.0	0.0	0.0	0.0	0.0	0.0	0.1	0.1
195	0.0	0.0	0.0	0.0	0.0	0.0	0.1	0.1
255	0.0	0.0	0.0	0.0	0.0	0.0	0.0	0.0

DEFLECTION IN INCHES BASED ON MAX. STORM BAR HEIGHT
STORM BAR HEIGHT IN INCHES
Pd- DESIGNED PRESSURE IN PSF
SHUTTER SPAN IN INCHES

NOTE: STORM BARS ALLOWABLE HEIGHT ARE CONTROLLED BY THE MAXIMUM ALLOWABLE HEADER END REACTION.

APPROVED AS COMPLYING WITH THE SOUTH FLORIDA BUILDING CODE
DATE OCT 04 2001
BY
PRODUCT CONTROL DIVISION
BUILDING CODE COMPLIANCE OFFICE
ACCEPTANCE NO. 01-0424.02

Manufacturer:
Roller Star
6351 NW 28th WAY
FT. LAUDERDALE,
FLORIDA - 33309
Tel.: (954) 972-4772

Product:
RE1000
EXTRUDED ALUMINUM
ROLL SHUTTERS

Engineering:
EngCo Inc.
CA 8116
6971 W. Sunrise Blvd. 104
Plantation, Fl. 33313
Tel.: (954) 585-0304

AUG 07 2001

Engineer Seal
Pedro De Figueiredo
PE 52609

Date: 8/5/01
Scale: NA
Design by: PPMF

Dade County NOA:
PRODUCT REVISED
as complying with the Florida
Buiding Code
Acceptance No. 02-0419.01
Expiration Date 10/04/06
By
Miami Dade Product Control
Division

Drawing Number
01-057R

STORM BAR SELECTION AND DEFLECTION TABLES

1/8 2X4 STORM BAR

MAXIMUM ALLOWABLE
STORM BAR HEIGHT
2 SPANS SHUTTER

	SHUTTER SPAN							
Pd	66	60	54	48	42	36	30	24
30	117	120	120	120	120	120	120	120
45	95	100	105	112	119	120	120	120
55	86	90	95	101	108	117	120	120
65	79	83	87	93	99	107	117	120
75	72	77	81	86	92	100	109	120
85	63	70	76	81	87	94	103	115
95	57	62	69	77	82	89	97	109
105	51	56	63	71	78	84	92	103
115	47	50	57	65	71	80	88	99
125	43	47	53	59	68	77	85	95
135	40	44	49	55	63	73	81	91
145	37	41	45	51	58	68	78	88
155	35	38	42	48	55	64	76	85
165	32	36	40	45	51	60	72	82
175	31	34	37	42	48	56	68	80
185	29	32	35	40	46	53	64	78
195	27	30	33	38	43	51	61	76
255	21	23	26	29	33	39	46	58

MAXIMUM ALLOWABLE
STORM BAR HEIGHT
3 SPANS SHUTTER

	SHUTTER SPAN							
Pd	66	60	54	48	42	36	30	24
30	102	113	120	120	120	120	120	120
45	68	75	83	94	107	120	120	120
55	56	61	68	77	88	102	120	120
65	47	52	58	65	74	87	104	120
75	41	45	50	56	64	75	90	113
85	36	39	44	49	57	66	79	99
95	32	35	39	44	51	59	71	89
105	29	32	35	40	46	53	64	80
115	26	29	32	36	42	49	61	73
125	24	27	30	33	38	45	54	67
135	22	25	27	31	35	41	50	62
145	21	23	26	29	33	39	46	58
155	19	21	24	27	31	36	43	54
165	18	20	22	25	29	34	41	51
175	17	19	21	24	27	32	38	48
185	14	18	20	22	26	30	36	45
195	13	17	19	21	24	28	34	43
255	12	13	14	16	19	22	26	33

STORM BAR MAXIMUM DEFLECTION
2 SPANS SHUTTER

	SHUTTER SPAN							
Pd	66	60	54	48	42	36	30	24
30	1.4	1.4	1.3	1.1	1.0	0.8	0.7	0.6
45	0.9	1.0	1.1	1.3	1.4	1.3	1.1	0.8
55	0.8	0.8	0.9	1.0	1.2	1.4	1.3	1.0
65	0.6	0.7	0.8	0.9	1.0	1.2	1.4	1.2
75	0.5	0.6	0.7	0.7	0.9	1.0	1.2	1.4
85	0.3	0.5	0.6	0.7	0.8	0.9	1.1	1.4
95	0.3	0.3	0.4	0.6	0.7	0.8	1.0	1.2
105	0.2	0.2	0.3	0.5	0.6	0.7	0.9	1.1
115	0.1	0.2	0.2	0.4	0.5	0.6	0.8	1.0
125	0.1	0.1	0.2	0.3	0.4	0.6	0.7	0.9
135	0.1	0.1	0.2	0.2	0.3	0.5	0.7	0.8
145	0.1	0.1	0.1	0.2	0.3	0.4	0.6	0.8
155	0.1	0.1	0.1	0.1	0.2	0.4	0.6	0.7
165	0.0	0.1	0.1	0.1	0.2	0.3	0.5	0.7
175	0.0	0.1	0.1	0.1	0.1	0.2	0.4	0.7
185	0.0	0.0	0.1	0.1	0.1	0.2	0.4	0.6
195	0.0	0.0	0.1	0.1	0.1	0.2	0.3	0.6
255	0.0	0.0	0.0	0.0	0.0	0.1	0.1	0.3

STORM BAR MAXIMUM DEFLECTION
3 SPANS SHUTTER

	SHUTTER SPAN							
Pd	66	60	54	48	42	36	30	24
30	0.7	1.0	1.1	1.0	0.9	0.7	0.6	0.5
45	0.2	0.3	0.4	0.6	0.8	1.1	0.9	0.7
55	0.1	0.2	0.2	0.3	0.5	0.7	1.1	0.9
65	0.1	0.1	0.1	0.2	0.3	0.4	0.8	1.1
75	0.0	0.1	0.1	0.1	0.2	0.3	0.5	1.0
85	0.0	0.0	0.1	0.1	0.1	0.2	0.3	0.7
95	0.0	0.0	0.0	0.1	0.1	0.1	0.2	0.5
105	0.0	0.0	0.0	0.0	0.1	0.1	0.2	0.3
115	0.0	0.0	0.0	0.0	0.1	0.1	0.1	0.3
125	0.0	0.0	0.0	0.0	0.0	0.1	0.1	0.2
135	0.0	0.0	0.0	0.0	0.0	0.0	0.1	0.2
145	0.0	0.0	0.0	0.0	0.0	0.0	0.1	0.1
155	0.0	0.0	0.0	0.0	0.0	0.0	0.1	0.1
165	0.0	0.0	0.0	0.0	0.0	0.0	0.0	0.1
175	0.0	0.0	0.0	0.0	0.0	0.0	0.0	0.1
185	0.0	0.0	0.0	0.0	0.0	0.0	0.0	0.1
195	0.0	0.0	0.0	0.0	0.0	0.0	0.0	0.1
255	0.0	0.0	0.0	0.0	0.0	0.0	0.0	0.0

DEFLECTION IN INCHES BASED ON MAX. STORM BAR HEIGHT
STORM BAR HEIGHT IN INCHES
Pd- DESIGNED PRESSURE IN PSF
SHUTTER SPAN IN INCHES

1/8 2X5 STORM BAR

MAXIMUM ALLOWABLE
STORM BAR HEIGHT
2 SPANS SHUTTER

	SHUTTER SPAN							
Pd	66	60	54	48	42	36	30	24
30	120	120	120	120	120	120	120	120
45	112	117	120	120	120	120	120	120
55	98	106	112	119	120	120	120	120
65	83	92	102	109	117	120	120	120
75	72	79	88	99	109	117	120	120
85	63	70	78	87	100	110	120	120
95	57	62	69	78	89	104	114	120
105	51	56	63	71	81	94	109	120
115	47	50	57	65	74	86	104	118
125	43	47	53	59	68	79	95	111
135	40	44	49	55	63	73	88	107
145	37	41	45	51	58	68	82	103
155	35	38	42	48	55	64	77	96
165	32	36	40	45	51	60	72	90
175	31	34	37	42	48	56	68	85
185	29	32	35	40	46	53	64	80
195	27	30	34	38	43	51	61	76
255	21	23	26	29	33	39	46	58

MAXIMUM ALLOWABLE
STORM BAR HEIGHT
3 SPANS SHUTTER

	SHUTTER SPAN							
Pd	66	60	54	48	42	36	30	24
30	102	113	120	120	120	120	120	120
45	68	75	83	94	107	120	120	120
55	56	61	68	77	88	102	120	120
65	47	52	58	65	74	87	104	120
75	41	45	50	56	64	75	90	113
85	36	39	44	49	57	66	79	99
95	32	35	39	44	51	59	71	89
105	29	32	35	40	46	53	64	80
115	26	29	32	36	42	49	61	73
125	24	27	30	33	38	45	54	67
135	22	25	27	31	35	41	50	62
145	21	23	26	29	33	39	46	58
155	19	21	24	27	31	36	43	54
165	18	20	22	25	29	34	41	51
175	17	19	21	24	27	32	38	48
185	14	18	20	22	26	30	36	45
195	13	17	19	21	24	28	34	43
255	12	13	14	16	19	22	26	33

STORM BAR MAXIMUM DEFLECTION
2 SPANS SHUTTER

	SHUTTER SPAN							
Pd	66	60	54	48	42	36	30	24
30	0.9	0.8	0.7	0.6	0.6	0.5	0.4	0.3
45	1.0	1.1	1.1	1.0	0.9	0.7	0.6	0.5
55	0.7	0.9	1.0	1.2	1.0	0.9	0.7	0.6
65	0.4	0.6	0.8	1.0	1.1	1.1	0.9	0.7
75	0.3	0.4	0.5	0.8	1.0	1.1	1.0	0.8
85	0.2	0.3	0.4	0.5	0.8	1.0	1.1	0.9
95	0.1	0.2	0.3	0.4	0.5	0.9	1.0	1.0
105	0.1	0.1	0.2	0.3	0.4	0.6	1.0	1.1
115	0.1	0.1	0.1	0.2	0.3	0.5	0.9	1.1
125	0.1	0.1	0.1	0.2	0.2	0.4	0.7	1.0
135	0.0	0.1	0.1	0.1	0.2	0.3	0.5	0.9
145	0.0	0.1	0.1	0.1	0.1	0.2	0.4	0.9
155	0.0	0.0	0.1	0.1	0.1	0.2	0.4	0.7
165	0.0	0.0	0.0	0.1	0.1	0.2	0.3	0.6
175	0.0	0.0	0.0	0.1	0.1	0.1	0.2	0.5
185	0.0	0.0	0.0	0.0	0.1	0.1	0.2	0.4
195	0.0	0.0	0.0	0.0	0.1	0.1	0.2	0.3
255	0.0	0.0	0.0	0.0	0.0	0.0	0.1	0.2

STORM BAR MAXIMUM DEFLECTION
3 SPANS SHUTTER

	SHUTTER SPAN							
Pd	66	60	54	48	42	36	30	24
30	0.4	0.6	0.6	0.6	0.5	0.4	0.4	0.3
45	0.1	0.2	0.2	0.3	0.5	0.6	0.5	0.4
55	0.1	0.1	0.1	0.2	0.3	0.4	0.7	0.5
65	0.0	0.1	0.1	0.1	0.2	0.3	0.4	0.6
75	0.0	0.0	0.0	0.1	0.1	0.2	0.3	0.6
85	0.0	0.0	0.0	0.0	0.1	0.1	0.2	0.4
95	0.0	0.0	0.0	0.0	0.1	0.1	0.1	0.3
105	0.0	0.0	0.0	0.0	0.0	0.1	0.1	0.2
115	0.0	0.0	0.0	0.0	0.0	0.0	0.1	0.1
125	0.0	0.0	0.0	0.0	0.0	0.0	0.1	0.1
135	0.0	0.0	0.0	0.0	0.0	0.0	0.0	0.1
145	0.0	0.0	0.0	0.0	0.0	0.0	0.0	0.1
155	0.0	0.0	0.0	0.0	0.0	0.0	0.0	0.1
165	0.0	0.0	0.0	0.0	0.0	0.0	0.0	0.1
175	0.0	0.0	0.0	0.0	0.0	0.0	0.0	0.0
185	0.0	0.0	0.0	0.0	0.0	0.0	0.0	0.0
195	0.0	0.0	0.0	0.0	0.0	0.0	0.0	0.0
255	0.0	0.0	0.0	0.0	0.0	0.0	0.0	0.0

DEFLECTION IN INCHES BASED ON MAX. STORM BAR HEIGHT
STORM BAR HEIGHT IN INCHES
Pd- DESIGNED PRESSURE IN PSF
SHUTTER SPAN IN INCHES

NOTE: STORM BARS ALLOWABLE HEIGHT ARE CONTROLLED BY THE MAXIMUM ALLOWABLE HEADER END REACTION.

APPROVED AS COMPLYING WITH THE
SOUTH FLORIDA BUILDING CODE
DATE OCT 04 2001
BY
PRODUCT CONTROL DIVISION
BUILDING CODE COMPLIANCE OFFICE
ACCEPTANCE NO. 01-0424.02

Manufacturer:
Roller Star
6351 NW 28th WAY
FT. LAUDERDALE,
FLORIDA — 33309
Tel.: (954) 972-4772

Product:
RE1000
EXTRUDED ALUMINUM
ROLL SHUTTERS

Engineering:
EngCo Inc.
CA 8116
6971 W. Sunrise Blvd. 104
Plantation, Fl. 33313
Tel.: (954) 585-0304

AUG 07 2001

Engineer Seal
Pedro De Figueiredo
PE 52609

Date: 8/5/01
Scale: NA
Design by: PPMF

Dade County NOA:
PRODUCT REVISED
as complying with the Florida
Building Code
Acceptance No. 02-0419.01
Expiration Date 10/04/06
By
Miami Dade Product Control
Division

Drawing Number
01-057R

STORM BAR ANCHORAGE

WALL MOUNTED STORM BARS
ANCHORED TO CONCRETE OR WOOD

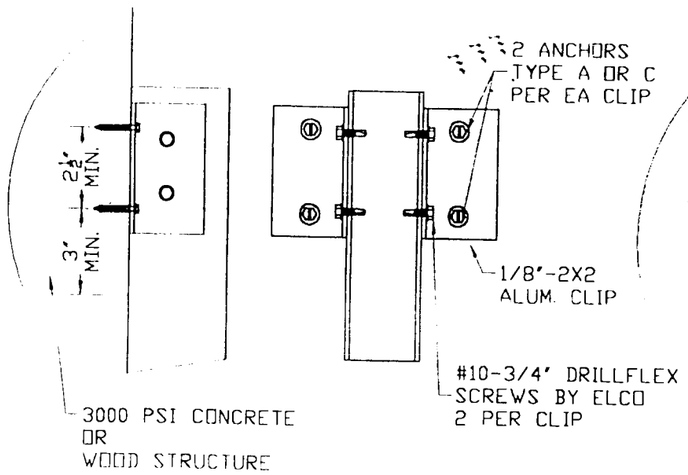

WALL MOUNTED STORM BARS
ANCHORED TO HOLLOW BLOCK WALL

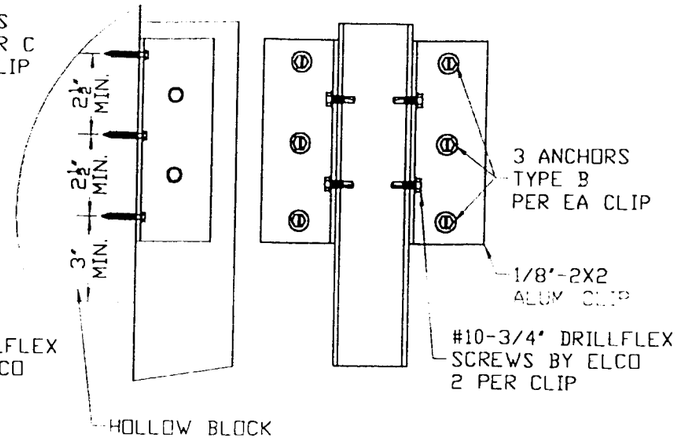

NOTE: ANCHORAGE IS CONTROLLED BY THE MAXIMUM STORM BAR HEIGHT SELECTION TABLES ON SHEETS 5 AND 6 OF 14

FLOOR/CEILING MOUNTED STORM BARS
ANCHORED TO CONCRETE SLAB

Clip Size	2 SPANS ALLOWABLE Pd (PSF)	3 SPANS ALLOWABLE Pd (PSF)	(s)	STORM BARS
2"	<= 30	<= 30	1.5	2"
3"	<= 75	<=255	2.0	2"
3"	<= 45	<=255	2.0	3"
4"	<=105	<=255	3.0	3"
4"	<= 65	<=255	3.0	4"
5"	<=255	<=255	4.0	2", 3", 4", 5"

Pd Allowable designed pressure

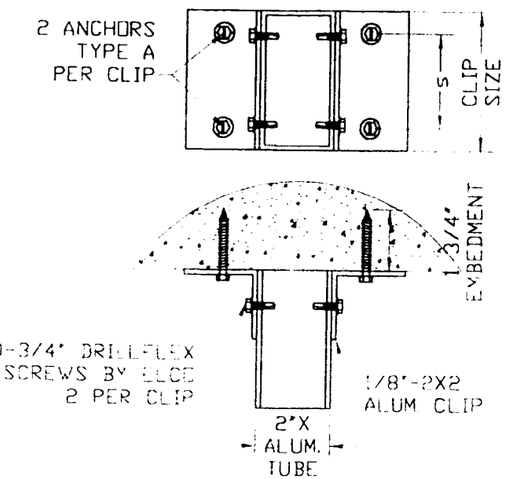

STORM BARS MOUNTED ON
BUILT-OUT ALUM. TUBE AND
SHUTTER HEADER

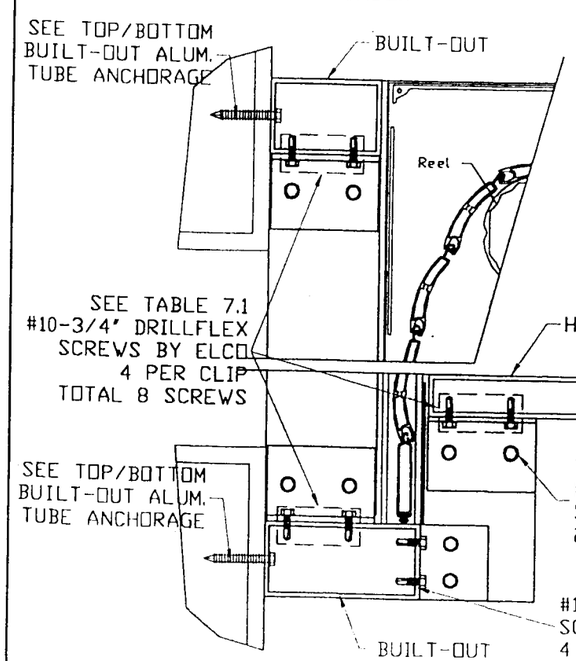

TABLE 7.1

Clip Size	Pd Psf	(s)	Storm Bars
2"	<= 75	1.5"	2"
3"	<= 75	2.5"	2", 3"
4"	<=225	3.0"	2", 3", 4", 5"

Pd Allowable designed pressure

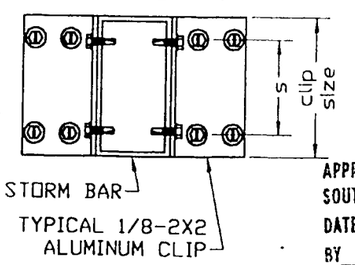

APPROVED AS COMPLYING WITH THE
SOUTH FLORIDA BUILDING CODE
DATE OCT 0 4 2001
BY
PRODUCT CONTROL DIVISION
BUILDING CODE COMPLIANCE OFFICE
ACCEPTANCE NO. 01-0424.02

ANCHOR SCHEDULE

Type	Description	Embed.	Substract	Manufacturer
A	1/4" Tapcon	1 3/4"	Concrete	Elco
B	1/4" Tapcon	1 1/4"	Hollow Block	Elco
C	#14 SS Wood Screws	1 1/2"	Wood (SG=.55)	Elco

EDGE DISTANCE =3"

TOP/BOTTOM BUILT-OUT ALUMINUM
TUBE ANCHORAGE

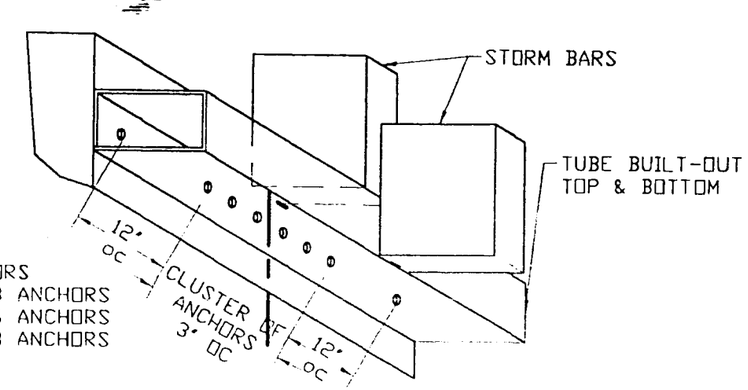

CLUSTER OF ANCHORS
TYPE A- MIN. OF 3 ANCHORS
TYPE B- MIN. OF 6 ANCHORS
TYPE C- MIN. OF 3 ANCHORS

Manufacturer:
Roller Star
6351 NW 28th WAY
FT. LAUDERDALE,
FLORIDA 33309
Tel.: (954) 972-4772

Product:
RE1000
EXTRUDED ALUMINUM
ROLL SHUTTERS

Engineering:
EngCo Inc.
CA 8116
6971 W. Sunrise Blvd. 104
Plantation, Fl. 33313
Tel.: (954) 585-0304

AUG 0 7 2001

Engineer Seal
Pedro De Figueiredo
PE 52609

Date: 8/5/01
Scale: NA
Design by: PPMF

Dade County NOA:

PRODUCT REVISED
as complying with the Florida
Building Code
Acceptance No. 02-0419.01
Expiration Date 10/09/06
By
Miami Dade Product Control
Division

Drawing Number
01-057R

HEADER SELECTION AND DEFLECTION TABLES

1/8 2X2 STORM BAR

HEADER SELECTION
2 SPANS SHUTTER

	SHUTTER SPAN							
Pd	66	60	54	48	42	36	30	24
30	2X4	2X3	2X3	2X3	2X2	2X2	2X2	2X2
45	2X4	2X4	2X3	2X3	2X3	2X2	2X2	2X2
55	2X4	2X4	2X4	2X3	2X3	2X2	2X2	2X2
65	2X4	2X4	2X4	2X3	2X3	2X3	2X2	2X2
75	2X5	2X4	2X4	2X4	2X3	2X3	2X2	2X2
85	2X5	2X4	2X4	2X4	2X3	2X3	2X2	2X2
95	2X5	2X5	2X4	2X4	2X3	2X3	2X2	2X2
105	2X5	2X5	2X4	2X4	2X3	2X3	2X2	2X2
115	2X5	2X5	2X4	2X4	2X4	2X3	2X3	2X2
125	2X5	2X5	2X5	2X4	2X4	2X3	2X3	2X2
135	2X6	2X5	2X5	2X4	2X4	2X3	2X3	2X2
145	2X6	2X5	2X5	2X4	2X4	2X3	2X3	2X2
155	2X6	2X5	2X5	2X4	2X4	2X3	2X3	2X2
165	2X6	2X5	2X5	2X4	2X4	2X3	2X3	2X2
175	2X6	2X6	2X5	2X4	2X4	2X4	2X3	2X2
185	2X6	2X6	2X5	2X5	2X4	2X4	2X3	2X2
195	2X6	2X6	2X5	2X5	2X4	2X4	2X3	2X3
255	2X6	2X6	2X6	2X5	2X4	2X4	2X3	2X3

HEADER SELECTION
3 SPANS SHUTTER

	SHUTTER SPAN							
Pd	66	60	54	48	42	36	30	24
30	2X6	2X6	2X5	2X4	2X4	2X3	2X2	2X2
45	NA	2X6	2X5	2X5	2X4	2X3	2X3	2X2
55	NA	2X6	2X6	2X5	2X4	2X4	2X3	2X3
65	NA	2X6	2X6	2X5	2X4	2X4	2X3	2X3
75	NA	2X6	2X6	2X5	2X5	2X4	2X3	2X3
85	NA	2X6	2X6	2X5	2X5	2X4	2X3	2X3
95	NA	2X6	2X6	2X5	2X5	2X4	2X4	2X3
105	NA	2X6	2X6	2X5	2X5	2X4	2X4	2X3
115	NA	2X6	2X6	2X5	2X5	2X4	2X4	2X3
125	NA	2X6	2X6	2X5	2X5	2X4	2X4	2X3
135	NA	2X6	2X6	2X5	2X5	2X4	2X4	2X3
145	NA	2X6	2X6	2X5	2X5	2X4	2X4	2X3
155	NA	2X6	2X6	2X5	2X5	2X4	2X4	2X3
165	NA	2X6	2X6	2X5	2X5	2X4	2X4	2X3
175	NA	2X6	2X6	2X5	2X5	2X4	2X4	2X3
185	NA	2X6	2X6	2X5	2X5	2X4	2X4	2X3
195	NA	2X6	2X6	2X5	2X5	2X4	2X4	2X3
255	NA	2X6	2X6	2X5	2X5	2X4	2X4	2X3

MAXIMUM HEADER DEFLECTION
2 SPANS SHUTTER

	SHUTTER SPAN							
Pd	66	60	54	48	42	36	30	24
30	1.0	1.4	1.0	0.7	1.1	0.6	0.3	0.1
45	1.2	0.9	1.2	0.8	0.5	0.8	0.4	0.2
55	1.3	1.0	0.7	0.9	0.6	0.9	0.5	0.2
65	1.4	1.0	0.7	1.0	0.6	0.3	0.5	0.2
75	0.9	1.1	0.8	0.5	0.6	0.4	0.5	0.2
85	0.9	1.2	0.8	0.5	0.7	0.4	0.6	0.3
95	1.0	0.7	0.9	0.6	0.7	0.4	0.6	0.3
105	1.1	0.8	0.9	0.6	0.8	0.4	0.2	0.3
115	1.1	0.8	0.9	0.6	0.4	0.5	0.2	0.3
125	1.2	0.8	0.6	0.7	0.4	0.5	0.3	0.3
135	0.7	0.9	0.6	0.7	0.4	0.5	0.3	0.3
145	0.8	0.9	0.6	0.7	0.4	0.5	0.3	0.3
155	0.8	0.9	0.6	0.7	0.5	0.5	0.3	0.4
165	0.8	1.0	0.6	0.7	0.5	0.6	0.3	0.4
175	0.8	0.6	0.7	0.8	0.5	0.3	0.3	0.4
185	0.9	0.6	0.7	0.5	0.5	0.3	0.3	0.4
195	0.9	0.6	0.7	0.5	0.5	0.3	0.3	0.1
255	0.9	0.7	0.5	0.5	0.6	0.3	0.4	0.2

MAXIMUM HEADER DEFLECTION
3 SPANS SHUTTER

	SHUTTER SPAN							
Pd	66	60	54	48	42	36	30	24
30	1.9	1.4	1.5	1.7	1.1	1.3	1.7	0.7
45	NA	1.7	1.8	1.2	1.3	1.6	0.8	1.0
55	NA	1.9	1.3	1.4	1.5	0.9	0.9	0.4
65	NA	1.9	1.4	1.5	1.6	0.9	1.0	0.5
75	NA	1.9	1.4	1.6	1.0	1.0	1.1	0.5
85	NA	1.9	1.4	1.6	1.0	1.1	1.1	0.5
95	NA	1.9	1.4	1.6	1.1	1.1	0.6	0.6
105	NA	1.9	1.4	1.6	1.1	1.1	0.6	0.6
115	NA	1.9	1.4	1.5	1.1	1.2	0.7	0.6
125	NA	1.9	1.4	1.5	1.0	1.2	0.7	0.6
135	NA	1.9	1.4	1.6	1.0	1.1	0.7	0.7
145	NA	1.9	1.4	1.6	1.0	1.2	0.7	0.7
155	NA	1.9	1.4	1.6	1.1	1.2	0.7	0.7
165	NA	1.9	1.4	1.5	1.0	1.2	0.7	0.7
175	NA	1.9	1.4	1.6	1.0	1.2	0.7	0.7
185	NA	1.9	1.4	1.5	1.1	1.1	0.7	0.7
195	NA	1.9	1.4	1.5	1.0	1.2	0.7	0.7
255	NA	1.9	1.3	1.5	1.1	1.2	0.7	0.7

DEFLECTION IN INCHES BASED ON HEADER SELECTION
Pd- DESIGNED PRESSURE IN PSF
SHUTTER SPAN IN INCHES

1/8 2X3 STORM BAR

HEADER SELECTION
2 SPANS SHUTTER

	SHUTTER SPAN							
Pd	66	60	54	48	42	36	30	24
30	2X4	2X4	2X4	2X3	2X3	2X2	2X2	2X2
45	2X5	2X4	2X4	2X4	2X3	2X3	2X2	2X2
55	2X5	2X5	2X4	2X4	2X3	2X3	2X3	2X2
65	2X5	2X5	2X4	2X4	2X4	2X3	2X3	2X2
75	2X6	2X5	2X5	2X4	2X4	2X3	2X3	2X2
85	2X6	2X5	2X5	2X4	2X4	2X3	2X3	2X2
95	2X6	2X5	2X5	2X4	2X4	2X3	2X3	2X2
105	2X6	2X6	2X5	2X5	2X4	2X4	2X3	2X3
115	2X6	2X6	2X5	2X5	2X4	2X4	2X3	2X3
125	2X6	2X6	2X5	2X5	2X4	2X4	2X3	2X3
135	2X6	2X6	2X6	2X5	2X4	2X4	2X3	2X3
145	2X6	2X6	2X5	2X5	2X5	2X4	2X3	2X3
155	2X6	2X6	2X5	2X5	2X5	2X4	2X3	2X3
165	2X6	2X6	2X6	2X5	2X5	2X4	2X3	2X3
175	2X6	2X6	2X5	2X5	2X5	2X4	2X4	2X3
185	2X6	2X6	2X5	2X5	2X5	2X4	2X4	2X3
195	2X6	2X6	2X5	2X5	2X5	2X4	2X4	2X3
255	2X6	2X6	2X6	2X5	2X5	2X4	2X4	2X3

HEADER SELECTION
3 SPANS SHUTTER

	SHUTTER SPAN							
Pd	66	60	54	48	42	36	30	24
30	NA	2X6	2X6	2X5	2X4	2X3	2X3	2X2
45	NA	2X6	2X6	2X5	2X5	2X4	2X3	2X3
55	NA	2X6	2X6	2X5	2X5	2X4	2X4	2X3
65	NA	2X6	2X6	2X5	2X5	2X4	2X4	2X3
75	NA	2X6	2X6	2X5	2X5	2X4	2X4	2X3
85	NA	2X6	2X6	2X5	2X5	2X4	2X4	2X3
95	NA	2X6	2X6	2X5	2X5	2X4	2X4	2X3
105	NA	2X6	2X6	2X5	2X5	2X4	2X4	2X3
115	NA	2X6	2X6	2X5	2X5	2X4	2X4	2X3
125	NA	2X6	2X6	2X5	2X5	2X4	2X4	2X3
135	NA	2X6	2X6	2X5	2X5	2X4	2X4	2X3
145	NA	2X6	2X6	2X5	2X5	2X4	2X4	2X3
155	NA	2X6	2X6	2X5	2X5	2X4	2X4	2X3
165	NA	2X6	2X6	2X5	2X5	2X4	2X4	2X3
175	NA	2X6	2X6	2X5	2X5	2X4	2X4	2X3
185	NA	2X6	2X6	2X5	2X5	2X4	2X4	2X3
195	NA	2X6	2X6	2X5	2X5	2X4	2X4	2X3
255	NA	2X6	2X6	2X5	2X5	2X4	2X4	2X3

MAXIMUM HEADER DEFLECTION
2 SPANS SHUTTER

	SHUTTER SPAN							
Pd	66	60	54	48	42	36	30	24
30	1.3	0.9	0.7	0.9	0.5	0.8	0.4	0.2
45	0.9	1.1	0.8	0.5	0.7	0.4	0.6	0.2
55	1.0	0.7	0.9	0.6	0.7	0.4	0.2	0.3
65	1.1	0.8	1.0	0.6	0.4	0.5	0.2	0.3
75	0.7	0.9	0.6	0.7	0.4	0.5	0.3	0.3
85	0.8	0.9	0.6	0.7	0.5	0.5	0.3	0.3
95	0.8	1.0	0.7	0.8	0.5	0.6	0.3	0.4
105	0.9	0.6	0.7	0.5	0.5	0.3	0.3	0.1
115	0.9	0.7	0.7	0.5	0.5	0.3	0.3	0.2
125	0.9	0.7	0.8	0.5	0.5	0.3	0.3	0.2
135	0.9	0.7	0.5	0.5	0.6	0.3	0.4	0.2
145	0.9	0.7	0.8	0.5	0.3	0.3	0.4	0.2
155	0.9	0.7	0.8	0.5	0.3	0.4	0.4	0.2
165	0.9	0.7	0.5	0.5	0.4	0.4	0.4	0.2
175	0.9	0.7	0.8	0.5	0.4	0.4	0.2	0.2
185	0.9	0.7	0.8	0.5	0.4	0.4	0.2	0.2
195	0.9	0.7	0.5	0.5	0.4	0.4	0.2	0.2
255	0.9	0.7	0.5	0.5	0.4	0.4	0.2	0.2

MAXIMUM HEADER DEFLECTION
3 SPANS SHUTTER

	SHUTTER SPAN							
Pd	66	60	54	48	42	36	30	24
30	NA	1.8	1.3	1.3	1.4	1.5	0.7	0.8
45	NA	1.9	1.4	1.6	1.0	1.0	1.1	0.4
55	NA	1.9	1.4	1.6	1.1	1.1	0.6	0.5
65	NA	1.9	1.4	1.6	1.1	1.2	0.7	0.6
75	NA	1.9	1.4	1.6	1.1	1.2	0.7	0.7
85	NA	1.9	1.4	1.6	1.1	1.2	0.7	0.7
95	NA	1.9	1.4	1.6	1.1	1.2	0.7	0.7
105	NA	1.9	1.4	1.6	1.1	1.1	0.7	0.7
115	NA	1.9	1.4	1.5	1.1	1.2	0.7	0.7
125	NA	1.9	1.4	1.5	1.0	1.2	0.7	0.7
135	NA	1.9	1.4	1.6	1.0	1.1	0.7	0.7
145	NA	1.9	1.4	1.6	1.0	1.2	0.7	0.7
155	NA	1.9	1.4	1.6	1.1	1.2	0.7	0.7
165	NA	1.9	1.4	1.5	1.0	1.2	0.7	0.7
175	NA	1.9	1.4	1.6	1.0	1.2	0.7	0.7
185	NA	1.9	1.4	1.5	1.1	1.1	0.7	0.7
195	NA	1.9	1.4	1.5	1.0	1.2	0.7	0.7
255	NA	1.9	1.3	1.5	1.1	1.2	0.7	0.7

DEFLECTION IN INCHES BASED ON HEADER SELECTION
Pd- DESIGNED PRESSURE IN PSF
SHUTTER SPAN IN INCHES

NOTE: HEADER SELECTION AND DEFLECTION ARE CONTROLLED BY THE MAXIMUM ALLOWABLE STORM BARS HEIGHT TABLES ON SHEETS 5 AND 6 OF 14

APPROVED AS COMPLYING WITH THE SOUTH FLORIDA BUILDING CODE
DATE OCT 04 2001
BY
PRODUCT CONTROL DIVISION
BUILDING CODE COMPLIANCE OFFICE
ACCEPTANCE NO. 01-0424.02

Manufacturer:
Roller Star
6351 NW 28th WAY
FT. LAUDERDALE,
FLORIDA - 33309
Tel.: (954) 972-4772

Product:
RE1000
EXTRUDED ALUMINUM ROLL SHUTTERS

Engineering:
EngCo Inc.
CA 8116
6971 W. Sunrise Blvd. 104
Plantation, Fl. 33313
Tel.: (954) 585-0304

AUG 07 2001

Engineer Seal
Pedro De Figueiredo
PE 52609

Date: 8/5/01
Scale: NA
Design by: PPMF

Dade County NOA:
PRODUCT REVISED
as complying with the Florida Buiding Code
Acceptance No. 02-0419.01
Expiration Date 10/04/06
By
Miami Dade Product Control Division

Drawing Number
01-057R

HEADER SELECTION AND DEFLECTION TABLES

1/8 2X4 STORM BAR

HEADER SELECTION
2 SPANS SHUTTER

	SHUTTER SPAN							
Pd	66	60	54	48	42	36	30	24
30	2X5	2X4	2X4	2X3	2X3	2X2	2X2	2X2
45	2X5	2X5	2X5	2X4	2X4	2X3	2X2	2X2
55	2X6	2X5	2X5	2X4	2X4	2X3	2X3	2X2
65	2X6	2X6	2X5	2X5	2X4	2X3	2X3	2X2
75	2X6	2X6	2X5	2X5	2X4	2X4	2X3	2X3
85	2X6	2X6	2X5	2X5	2X4	2X4	2X3	2X3
95	2X6	2X6	2X5	2X5	2X5	2X4	2X3	2X3
105	[illegible]	[illegible]	[illegible]	[illegible]	[illegible]	[illegible]	[illegible]	[illegible]
115	2X6	[illegible]	[illegible]	[illegible]	[illegible]	[illegible]	2X4	2X3
125	2X6	2X6	2X6	2X5	2X5	2X4	2X4	2X3
135	2X6	2X6	2X6	2X5	2X5	2X4	2X4	2X3
145	2X6	2X6	2X5	2X5	2X5	2X4	2X4	2X3
155	2X6	2X6	2X5	2X5	2X5	2X4	2X4	2X3
165	2X6	2X6	2X6	2X5	2X5	2X4	2X4	2X3
[illegible]	2X6	[illegible]	[illegible]	[illegible]	[illegible]	[illegible]	[illegible]	[illegible]
[illegible]	[illegible]	[illegible]	[illegible]	[illegible]	[illegible]	[illegible]	[illegible]	[illegible]
[illegible]	[illegible]	[illegible]	[illegible]	[illegible]	[illegible]	[illegible]	[illegible]	[illegible]
[illegible]	[illegible]	[illegible]	[illegible]	[illegible]	[illegible]	[illegible]	[illegible]	[illegible]

HEADER SELECTION
3 SPANS SHUTTER

	SHUTTER SPAN							
Pd	66	60	54	48	42	36	30	24
30	NA	2X6	2X6	2X5	2X4	2X3	2X3	2X2
45	NA	2X6	2X6	2X5	2X5	2X4	2X3	2X3
55	NA	2X6	2X6	2X5	2X5	2X4	2X4	2X3
65	NA	2X6	2X6	2X5	2X5	2X4	2X4	2X3
75	NA	2X6	2X6	2X5	2X5	2X4	2X4	2X3
85	NA	2X6	2X6	2X5	2X5	2X4	2X4	2X3
95	NA	2X6	2X6	2X5	2X5	2X4	2X4	2X3
105	[illegible]	[illegible]	[illegible]	[illegible]	[illegible]	[illegible]	[illegible]	[illegible]
115	NA	2X6	2X5	2X5	2X5	2X4	2X4	2X3
125	NA	2X6	2X6	2X5	2X5	2X4	2X4	2X3
135	NA	2X6	2X6	2X5	2X5	2X4	2X4	2X3
145	NA	2X6	2X6	2X5	2X5	2X4	2X4	2X3
155	NA	2X6	2X6	2X5	2X5	2X4	2X4	2X3
165	NA	2X6	2X6	2X5	2X5	2X4	2X4	2X3
[illegible]	NA	[illegible]	[illegible]	[illegible]	[illegible]	[illegible]	[illegible]	[illegible]
[illegible]	[illegible]	[illegible]	[illegible]	[illegible]	[illegible]	[illegible]	[illegible]	[illegible]
[illegible]	[illegible]	[illegible]	[illegible]	[illegible]	[illegible]	[illegible]	[illegible]	[illegible]
[illegible]	[illegible]	[illegible]	[illegible]	[illegible]	[illegible]	[illegible]	[illegible]	[illegible]

MAXIMUM HEADER DEFLECTION
2 SPANS SHUTTER

	SHUTTER SPAN							
Pd	66	60	54	48	42	36	30	24
30	0.9	1.1	0.7	0.9	0.6	0.8	0.4	0.2
45	1.1	0.8	0.6	0.6	0.4	0.4	0.6	0.2
55	0.8	0.9	0.6	0.7	0.4	0.5	0.3	0.3
65	0.9	0.6	0.7	0.4	0.5	0.6	0.3	0.3
75	0.9	0.7	0.7	0.5	0.5	0.3	0.3	0.1
85	0.9	0.7	0.8	0.5	0.6	0.3	0.3	0.2
95	0.9	0.7	0.8	0.5	0.3	0.3	0.4	0.2
105	0.9	0.7	0.5	0.6	0.4	0.4	0.4	0.2
115	0.9	0.7	0.8	0.6	0.4	0.4	0.2	0.2
125	0.9	0.7	0.5	0.5	0.4	0.4	0.2	0.2
135	0.9	0.7	0.5	0.5	0.4	0.4	0.2	0.2
145	0.9	0.7	0.8	0.5	0.4	0.4	0.2	0.2
155	0.9	0.7	0.8	0.5	0.4	0.4	0.2	0.2
165	0.9	0.7	0.5	0.5	0.4	0.4	0.2	0.2
175	0.9	0.7	0.8	0.5	0.4	0.4	0.2	0.2
185	0.9	0.7	0.8	0.5	0.4	0.4	0.2	0.2
195	0.9	0.7	0.5	0.5	0.4	0.4	0.2	0.2
255	0.9	0.7	0.5	0.5	0.4	0.4	0.2	0.2

MAXIMUM HEADER DEFLECTION
3 SPANS SHUTTER

	SHUTTER SPAN							
Pd	66	60	54	48	42	36	30	24
30	NA	1.9	1.4	1.3	1.4	1.5	0.7	0.8
45	NA	1.9	1.4	1.6	1.1	1.1	1.1	0.4
55	NA	1.9	1.4	1.6	1.1	1.2	0.7	0.5
65	NA	1.9	1.4	1.6	1.1	1.2	0.7	0.6
75	NA	1.9	1.4	1.6	1.1	1.2	0.7	0.7
85	NA	1.9	1.4	1.6	1.1	1.2	0.7	0.7
95	NA	1.9	1.4	1.6	1.1	1.2	0.7	0.7
105	NA	1.9	1.4	1.6	1.1	1.1	0.7	0.7
115	NA	1.9	1.4	1.5	1.1	1.2	0.7	0.7
125	NA	1.9	1.4	1.5	1.0	1.2	0.7	0.7
135	NA	1.9	1.4	1.6	1.0	1.1	0.7	0.7
145	NA	1.9	1.4	1.6	1.0	1.2	0.7	0.7
155	NA	1.9	1.4	1.6	1.1	1.2	0.7	0.7
165	NA	1.9	1.4	1.5	1.0	1.2	0.7	0.7
175	NA	1.9	1.4	1.6	1.0	1.2	0.7	0.7
185	NA	1.9	1.4	1.5	1.1	1.1	0.7	0.7
195	NA	1.9	1.4	1.5	1.0	1.2	0.7	0.7
255	NA	1.9	1.3	1.5	1.1	1.2	0.7	0.7

DEFLECTION IN INCHES BASED ON HEADER SELECTION
Pd- DESIGNED PRESSURE IN PSF
SHUTTER SPAN IN INCHES

1/8 2X5 STORM BAR

HEADER SELECTION
2 SPANS SHUTTER

	SHUTTER SPAN							
Pd	66	60	54	48	42	36	30	24
30	2X5	2X4	2X4	2X3	2X3	2X2	2X2	2X2
45	2X6	2X5	2X5	2X4	2X4	2X3	2X2	2X2
55	2X6	2X6	2X5	2X5	2X4	2X3	2X3	2X2
65	2X6	2X6	2X6	2X5	2X4	2X4	2X3	2X2
75	2X6	2X6	2X6	2X5	2X5	2X4	2X3	2X3
85	2X6	2X6	2X6	2X5	2X5	2X4	2X4	2X3
95	2X6	2X6	2X5	2X5	2X5	2X4	2X4	2X3
105	[illegible]	[illegible]	[illegible]	[illegible]	[illegible]	[illegible]	[illegible]	[illegible]
115	2X6	2X6	2X6	2X5	2X5	2X4	2X4	2X3
125	2X6	2X6	2X6	2X5	2X5	2X4	2X4	2X3
135	2X6	2X6	2X6	2X5	2X5	2X4	2X4	2X3
145	2X6	2X6	2X5	2X5	2X5	2X4	2X4	2X3
155	2X6	2X6	2X5	2X5	2X5	2X4	2X4	2X3
165	2X6	2X6	2X5	2X5	2X5	2X4	2X4	2X3
[illegible]	[illegible]	[illegible]	[illegible]	[illegible]	[illegible]	[illegible]	[illegible]	[illegible]
[illegible]	[illegible]	[illegible]	[illegible]	[illegible]	[illegible]	[illegible]	[illegible]	[illegible]
[illegible]	[illegible]	[illegible]	[illegible]	[illegible]	[illegible]	[illegible]	[illegible]	[illegible]
[illegible]	[illegible]	[illegible]	[illegible]	[illegible]	[illegible]	[illegible]	[illegible]	[illegible]

HEADER SELECTION
3 SPANS SHUTTER

	SHUTTER SPAN							
Pd	66	60	54	48	42	36	30	24
30	NA	2X6	2X6	2X5	2X4	2X3	2X3	2X2
45	NA	2X6	2X6	2X5	2X5	2X4	2X3	2X3
55	NA	2X6	2X6	2X5	2X5	2X4	2X4	2X3
65	NA	2X6	2X6	2X5	2X5	2X4	2X4	2X3
75	NA	2X6	2X6	2X5	2X5	2X4	2X4	2X3
85	NA	2X6	2X6	2X5	2X5	2X4	2X4	2X3
95	NA	2X6	2X6	2X5	2X5	2X4	2X4	2X3
105	[illegible]	[illegible]	[illegible]	[illegible]	[illegible]	[illegible]	[illegible]	[illegible]
115	NA	2X6	2X6	2X5	2X5	2X4	2X4	2X3
125	NA	2X6	2X6	2X5	2X5	2X4	2X4	2X3
135	NA	2X6	2X6	2X5	2X5	2X4	2X4	2X3
145	NA	2X6	2X6	2X5	2X5	2X4	2X4	2X3
155	NA	2X6	2X6	2X5	2X5	2X4	2X4	2X3
165	NA	2X6	2X6	2X5	2X5	2X4	2X4	2X3
[illegible]	[illegible]	[illegible]	[illegible]	[illegible]	[illegible]	[illegible]	[illegible]	[illegible]
[illegible]	[illegible]	[illegible]	[illegible]	[illegible]	[illegible]	[illegible]	[illegible]	[illegible]
[illegible]	[illegible]	[illegible]	[illegible]	[illegible]	[illegible]	[illegible]	[illegible]	[illegible]
[illegible]	[illegible]	[illegible]	[illegible]	[illegible]	[illegible]	[illegible]	[illegible]	[illegible]

MAXIMUM HEADER DEFLECTION
2 SPANS SHUTTER

	SHUTTER SPAN							
Pd	66	60	54	48	42	36	30	24
30	1.0	1.1	0.7	0.9	0.6	0.8	0.4	0.2
45	0.8	0.9	0.6	0.7	0.4	0.4	0.6	0.2
55	0.9	0.7	0.7	0.5	0.5	0.5	0.3	0.3
65	0.9	0.7	0.5	0.5	0.6	0.3	0.3	0.3
75	0.9	0.7	0.5	0.5	0.4	0.4	0.4	0.1
85	0.9	0.7	0.5	0.5	0.4	0.4	0.2	0.2
95	0.9	0.7	0.8	0.5	0.4	0.4	0.2	0.2
105	0.9	0.7	0.5	0.6	0.4	0.4	0.2	0.2
115	0.9	0.7	0.8	0.6	0.4	0.4	0.2	0.2
125	0.9	0.7	0.5	0.5	0.4	0.4	0.2	0.2
135	0.9	0.7	0.5	0.5	0.4	0.4	0.2	0.2
145	0.9	0.7	0.8	0.5	0.4	0.4	0.2	0.2
155	0.9	0.7	0.8	0.5	0.4	0.4	0.2	0.2
165	0.9	0.7	0.5	0.5	0.4	0.4	0.2	0.2
175	0.9	0.7	0.8	0.5	0.4	0.4	0.2	0.2
185	0.9	0.7	0.8	0.5	0.4	0.4	0.2	0.2
195	0.9	0.7	0.5	0.5	0.4	0.4	0.2	0.2
255	0.9	0.7	0.5	0.5	0.4	0.4	0.2	0.2

MAXIMUM HEADER DEFLECTION
3 SPANS SHUTTER

	SHUTTER SPAN							
Pd	66	60	54	48	42	36	30	24
30	NA	1.9	1.4	1.3	1.4	1.5	0.7	0.8
45	NA	1.9	1.4	1.6	1.1	1.1	1.1	0.4
55	NA	1.9	1.4	1.6	1.1	1.2	0.7	0.5
65	NA	1.9	1.4	1.6	1.1	1.2	0.7	0.6
75	NA	1.9	1.4	1.6	1.1	1.2	0.7	0.7
85	NA	1.9	1.4	1.6	1.1	1.2	0.7	0.7
95	NA	1.9	1.4	1.6	1.1	1.2	0.7	0.7
105	NA	1.9	1.4	1.6	1.1	1.1	0.7	0.7
115	NA	1.9	1.4	1.5	1.1	1.2	0.7	0.7
125	NA	1.9	1.4	1.5	1.0	1.2	0.7	0.7
135	NA	1.9	1.4	1.6	1.0	1.1	0.7	0.7
145	NA	1.9	1.4	1.6	1.0	1.2	0.7	0.7
155	NA	1.9	1.4	1.6	1.1	1.2	0.7	0.7
165	NA	1.9	1.4	1.5	1.0	1.2	0.7	0.7
175	NA	1.9	1.4	1.6	1.0	1.2	0.7	0.7
185	NA	1.9	1.4	1.5	1.1	1.1	0.7	0.7
195	NA	1.9	1.4	1.5	1.0	1.2	0.7	0.7
255	NA	1.9	1.3	1.5	1.1	1.2	0.7	0.7

DEFLECTION IN INCHES BASED ON HEADER SELECTION
Pd- DESIGNED PRESSURE IN PSF
SHUTTER SPAN IN INCHES

NOTE: HEADER SELECTION AND DEFLECTION ARE CONTROLLED BY THE MAXIMUM ALLOWABLE STORM BARS HEIGHT TABLES ON SHEETS 5 AND 6 OF 14

APPROVED AS COMPLYING WITH THE SOUTH FLORIDA BUILDING CODE
DATE OCT 0 4 2001
BY
PRODUCT CONTROL DIVISION
BUILDING CODE COMPLIANCE OFFICE
ACCEPTANCE NO. 01-0424.02

Manufacturer:
Roller Star
6351 NW 28th WAY
FT. LAUDERDALE,
FLORIDA 33309
Tel.: (954) 972-4772

Product:
RE1000
EXTRUDED ALUMINUM ROLL SHUTTERS

Engineering:
EngCo Inc.
CA 8116
6971 W. Sunrise Blvd. 104
Plantation, Fl. 33313
Tel.: (954) 585-0304

AUG 0 7 2001

Engineer Seal
Pedro De Figueiredo
PE 52609

Date: 8/5/01
Scale: NA
Design by: PPMF

Dade County NOA:
PRODUCT REVISED
as complying with the Florida Building Code
Acceptance No. 02-0419.01
Expiration Date 10/09/06
By
Miami Dade Product Control Division

Drawing Number
01-057R

ANCHOR SCHEDULE

Type	Description	Embed.	Substract	Manufacturer
A	1/4" Tapcon	1 3/4"	Concrete	Elco
B	1/4" Tapcon	1 1/4"	Hollow Block	Elco
C	#14 SS Wood Screws	1 1/2"	Wood (SG=.55)	Elco

EDGE DISTANCE =3"

ANCHORAGE NOTE: HEADER ANCHORAGE IS CONTROLLED BY THE MAXIMUM ALLOWABLE STORM BARS HEIGHT TABLES ON SHEETS 5 AND 6 OF 14

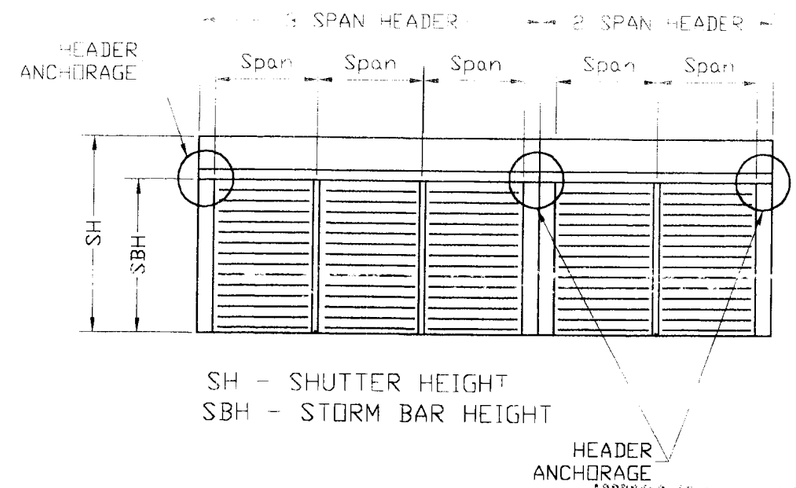

APPROVED AS COMPLYING WITH THE SOUTH FLORIDA BUILDING CODE
DATE OCT 04 2001
BY
PRODUCT CONTROL DIVISION
BUILDING CODE COMPLIANCE OFFICE
ACCEPTANCE NO. 01-0424.02

HEADER ANCHORAGE INTO MULLION TUBE

NOTE: INSIDE HEADER IS OPTIONAL, INSIDE STORM BARS CAN BE ANCHORED TO CEILING OR WALL.

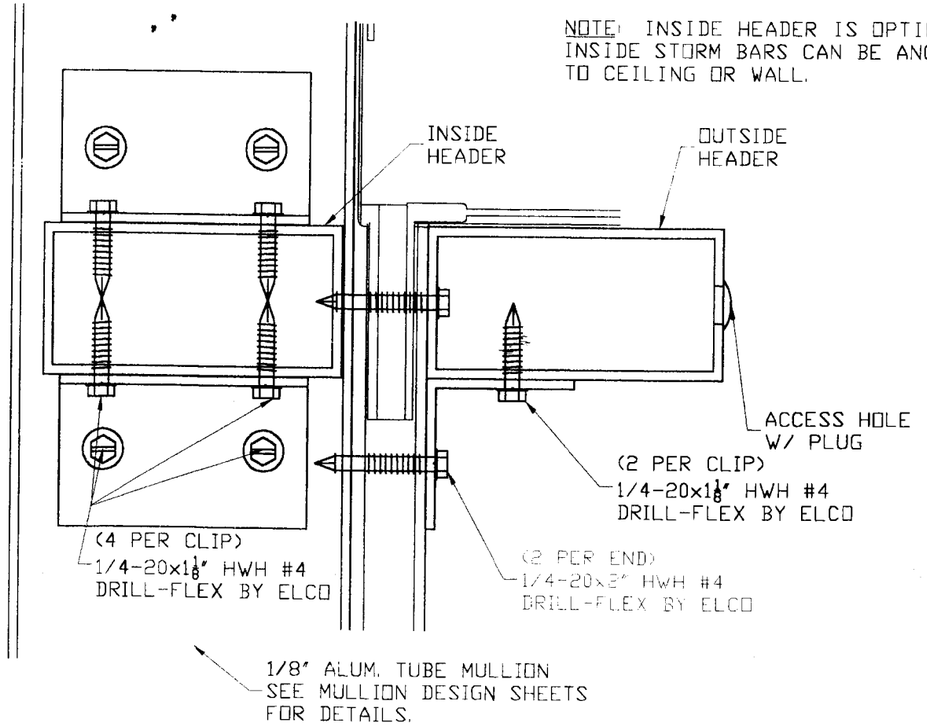

HEADER ANCHORAGE INTO BUILT-OUT ALUM. TUBE

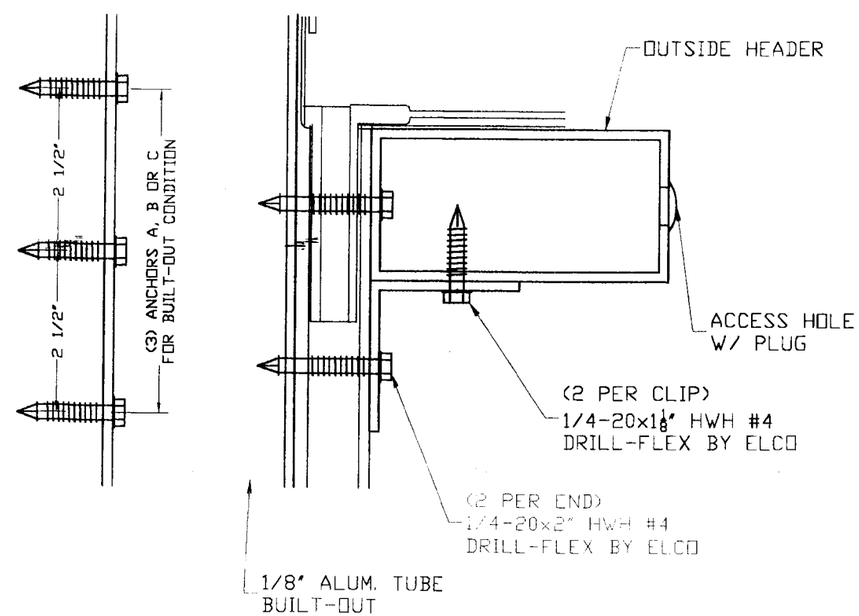

Manufacturer:
Roller Star
6351 NW 28th WAY
FT. LAUDERDALE,
FLORIDA - 33309
Tel.: (954) 972-4772

Product:
RE1000
EXTRUDED ALUMINUM ROLL SHUTTERS

Engineering:
EngCo Inc.
CA 8116
6971 W. Sunrise Blvd. 104
Plantation, Fl. 33313
Tel.: (954) 585-0304

AUG 07 2001
Engineer Seal
Pedro De Figueiredo
PE 52609

Date: 8/5/01
Scale: NA
Design by: PPMF

Dade County NOA:
PRODUCT REVISED
as complying with the Florida Buiding Code
Acceptance No. 02-0419.01
Expiration Date 10/04/06
By
Miami Dade Product Control Division

Drawing Number
01-057R

MULLION SELECTION TABLES

CASE 1 - MULLION ANCHORED WALL TO WALL OR WALL TO FLOOR

APPROVED AS COMPLYING WITH THE SOUTH FLORIDA BUILDING CODE
DATE OCT 0 4 2001
BY
MIAMI-DADE PERMIT DIVISION
MIAMI-DADE COUNTY COMPLIANCE OFFICE
COMPLIANCE NO. 01-0929.02

INTERMEDIATE MULLION

	MULLION SPAN							
Pd	120	108	96	84	72	60	48	36
30	2X6	2X5	2X4	2X4	2X3	2X3	2X2	2X2
45	2X6	2X6	2X5	2X4	2X4	2X3	2X2	2X2
55	NA	2X6	2X5	2X5	2X4	2X3	2X3	2X2
65	NA	2X6	2X5	2X5	2X4	2X3	2X3	2X2
75	NA	2X6	2X6	2X5	2X4	2X3	2X3	2X2
85	NA	2X6	2X6	2X5	2X4	2X3	2X3	2X2
95	NA	NA	2X6	2X5	2X4	2X4	2X3	2X2
105	NA	NA	2X6	2X5	2X4	2X4	2X3	2X2
115	NA	NA	2X6	2X5	2X5	2X4	2X3	2X2
125	NA	NA	2X6	2X5	2X5	2X4	2X3	2X2
135	NA	NA	2X6	2X6	2X5	2X4	2X3	2X2
145	NA	NA	NA	2X6	2X5	2X4	2X3	2X2
155	NA	NA	NA	2X6	2X5	2X4	2X3	2X2
165	NA	NA	NA	2X6	2X5	2X4	2X3	2X2
175	NA	NA	NA	2X6	2X5	2X4	2X3	2X2
185	NA	NA	NA	2X6	2X5	2X4	2X3	2X2
195	NA	NA	NA	2X6	2X5	2X4	2X3	2X2
255	NA	NA	NA	2X6	2X5	2X4	2X4	2X3

END MULLION

	MULLION SPAN							
Pd	120	108	96	84	72	60	48	36
30	2X4	2X4	2X3	2X3	2X3	2X2	2X2	2X2
45	2X5	2X4	2X4	2X3	2X3	2X2	2X2	2X2
55	2X5	2X5	2X4	2X4	2X3	2X3	2X2	2X2
65	2X5	2X5	2X4	2X4	2X3	2X3	2X2	2X2
75	2X6	2X5	2X4	2X4	2X3	2X3	2X2	2X2
85	2X6	2X5	2X4	2X4	2X3	2X3	2X2	2X2
95	2X6	2X5	2X5	2X4	2X3	2X3	2X2	2X2
105	2X6	2X5	2X5	2X4	2X4	2X3	2X2	2X2
115	2X6	2X6	2X5	2X4	2X4	2X3	2X2	2X2
125	2X6	2X6	2X5	2X4	2X4	2X3	2X2	2X2
135	2X6	2X6	2X5	2X4	2X4	2X3	2X2	2X2
145	2X6	2X6	2X5	2X4	2X4	2X3	2X2	2X2
155	NA	2X6	2X5	2X4	2X4	2X3	2X2	2X2
165	NA	2X6	2X5	2X5	2X4	2X3	2X3	2X2
175	NA	2X6	2X5	2X5	2X4	2X3	2X3	2X2
185	NA	2X6	2X5	2X5	2X4	2X3	2X3	2X2
195	NA	2X6	2X5	2X5	2X4	2X3	2X3	2X2
255	NA	NA	2X6	2X5	2X4	2X3	2X3	2X2

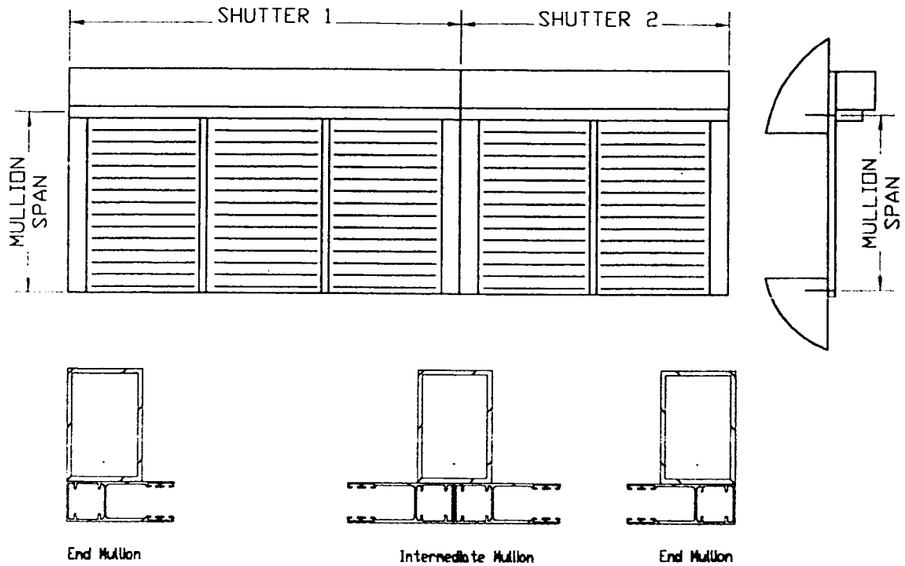

NOTE: MULLION TABLES ARE CONTROLLED BY THE SPAN VS PRESSURE TABLES ON SHEET 3 OF 14

CASE 2 - MULLION ANCHORED FLOOR TO CEILING

INTERMEDIATE MULLION

	MULLION SPAN							
Pd	120	108	96	84	72	60	48	36
30	2X6	2X5	2X5	2X4	2X4	2X3	2X3	2X2
45	NA	2X6	2X5	2X5	2X4	2X3	2X3	2X2
55	NA	2X6	2X5	2X5	2X4	2X4	2X3	2X2
65	NA	2X6	2X6	2X5	2X4	2X4	2X3	2X2
75	NA	NA	2X6	2X5	2X4	2X4	2X3	2X2
85	NA	NA	2X6	2X5	2X4	2X4	2X3	2X2
95	NA	NA	2X6	2X5	2X5	2X4	2X3	2X2
105	NA	NA	2X6	2X6	2X5	2X4	2X3	2X3
115	NA	NA	2X6	2X6	2X5	2X4	2X3	2X3
125	NA	NA	2X6	2X6	2X5	2X4	2X3	2X3
135	NA	NA	NA	2X6	2X5	2X4	2X3	2X3
145	NA	NA	NA	2X6	2X5	2X4	2X3	2X3
155	NA	NA	NA	2X6	2X5	2X4	2X3	2X3
165	NA	NA	NA	2X6	2X5	2X4	2X3	2X3
175	NA	NA	NA	2X6	2X5	2X4	2X4	2X3
185	NA	NA	NA	2X6	2X5	2X4	2X4	2X3
195	NA	NA	NA	2X6	2X5	2X4	2X4	2X3
255	NA	NA	NA	NA	2X6	2X5	2X4	2X3

END MULLION

	MULLION SPAN							
Pd	120	108	96	84	72	60	48	36
30	2X5	2X4	2X4	2X4	2X3	2X3	2X2	2X2
45	2X5	2X5	2X4	2X4	2X3	2X3	2X3	2X2
55	2X6	2X5	2X4	2X4	2X3	2X3	2X3	2X2
65	2X6	2X5	2X5	2X4	2X4	2X3	2X3	2X2
75	2X6	2X5	2X5	2X4	2X4	2X3	2X3	2X2
85	2X6	2X5	2X5	2X4	2X4	2X3	2X3	2X2
95	2X6	2X5	2X5	2X4	2X4	2X3	2X3	2X2
105	2X6	2X6	2X5	2X4	2X4	2X3	2X3	2X2
115	2X6	2X6	2X5	2X5	2X4	2X3	2X3	2X2
125	2X6	2X6	2X5	2X5	2X4	2X3	2X3	2X2
135	NA	2X6	2X5	2X5	2X4	2X3	2X3	2X2
145	NA	2X6	2X5	2X5	2X4	2X3	2X3	2X2
155	NA	2X6	2X5	2X5	2X4	2X3	2X3	2X2
165	NA	2X6	2X5	2X5	2X4	2X4	2X3	2X2
175	NA	2X6	2X6	2X5	2X4	2X4	2X3	2X2
185	NA	2X6	2X6	2X5	2X4	2X4	2X3	2X2
195	NA	2X6	2X6	2X5	2X4	2X4	2X3	2X2
255	NA	NA	2X6	2X5	2X5	2X4	2X3	2X2

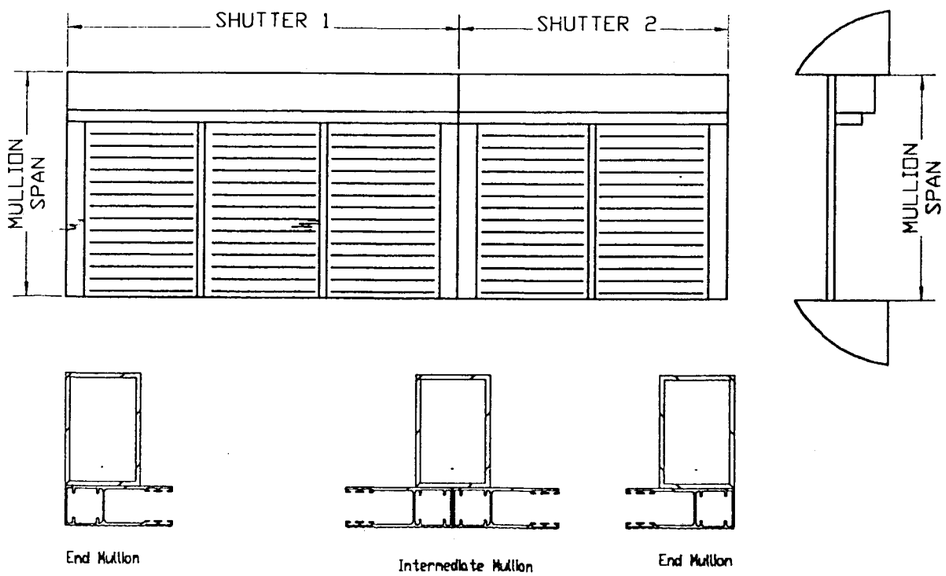

Manufacturer:
Roller Star
6351 NW 28th WAY
FT. LAUDERDALE,
FLORIDA - 33309
Tel.: (954) 972-4772

Product:
RE1000
EXTRUDED ALUMINUM
ROLL SHUTTERS

Engineering:
EngCo Inc.
CA 8116
6971 W. Sunrise Blvd. 104
Plantation, Fl. 33313
Tel.: (954) 585-0304

AUG 07 2001

Engineer Seal
Pedro De Figueiredo
PE 52609

Date: 8/5/01
Scale: NA
Design by: PPMF

Dade County NOA:
PRODUCT REVISED
as complying with the Florida Building Code
Acceptance No 02-0419.01
Expiration Date 10/04/04
By
Miami Dade Product Control Division

Drawing Number
01-057R

Sheet
11 of 14

MULLION ANCHORAGE TABLES
ALLOWABLE DESIGN LOAD - Pd (Psf)

TABLE 1
Mullion Anchored to Clip

Allowable Loads PSF

	# OF ANCHORS D	
AREA	2	3
10	145	195
15	95	145
20	75	105
25	55	85
30	45	75
35	30	55
40	30	55
45	30	45

NOTES:
1- END MULLION: USE ONE CLIP WITH 2 OR 3 ANCHORS TYPE D.
2- INTERMEDIATE MULLION: USE TWO CLIPS WITH 4 OR 6 ANCHORS TYPE D.
3- AREA: SEE FIGURE 1 TO CALCULATE AREA

FIGURE 1
Area Calculation

AREA = Ms X SPAN (SQF)
Ms= MULLION SPAN (Ft)
SPAN= SHUTTER SPAN (Ft)
AREA END MULLION 1 = Ms X SPAN 1
AREA END MULLION 2 = Ms X SPAN 2
AREA INTERM. MULL 3 = Ms X SPAN (SPAN=GREATER OF SPAN 1 AND 2)

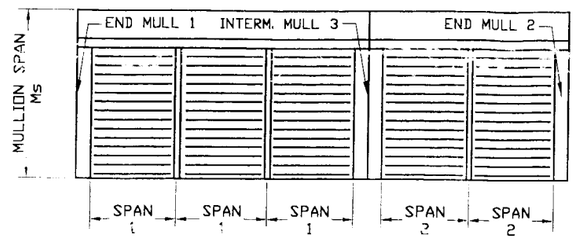

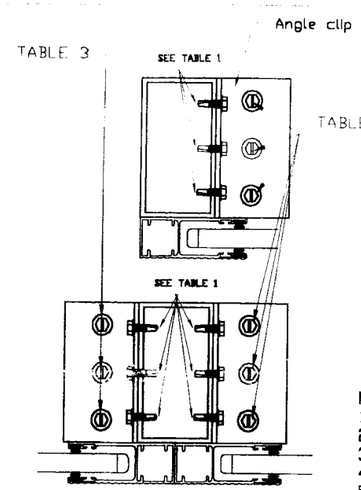

TABLE 3
Mullion Anchored to Floor/Ceiling

Allowable Loads PSF

	ANCHOR TYPE A				
AREA	2	3	4	5	6
10	30	65	85	115	155
15	NA	45	55	75	105
20	NA	30	45	55	75
25	NA	NA	30	45	55
30	NA	NA	30	30	45
35	NA	NA	NA	30	45
40	NA	NA	NA	NA	30
45	NA	NA	NA	NA	30

NOTES:
1- USE 2 ANCHORS FOR 2"/3"/4" CLIPS
2- USE 3 ANCHORS FOR 5"/6" CLIPS
3- END MULLION: USE ONE CLIP
4- INTERMEDIATE MULLIONS: USE TWO CLIPS
5- AREA: SEE FIGURE 1 TO CALCULATE AREA

TABLE 5 - WALL MOUNT
Mullion Anchored to Wall

Allowable Loads PSF

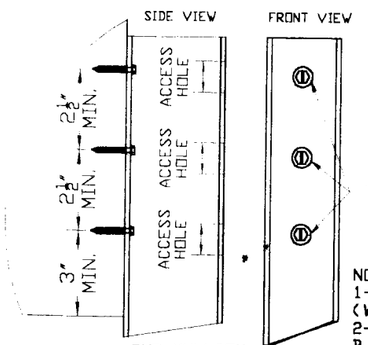

END MULLION
WALL MOUNT (W/OUT CLIP)

	3 ANCHORS		
AREA	A	B	C
10	255	115	255
15	165	75	175
20	125	55	125
25	95	45	105
30	85	30	85
35	75	30	75
40	55	NA	65
45	55	NA	55

NOTE:
1- END MULLIONS - 3 ANCHORS TYPE A, B OR C (WITHOUT OR WITH 1 CLIP)
2- INTERMEDIATE MULLIONS - 6 ANCHORS TYPE A, B, OR C (WITH 2 CLIPS)
3- AREA: SEE FIGURE 1 TO CALCULATE AREA

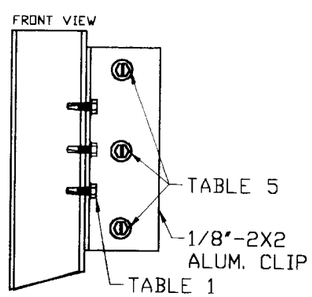

END MULLION
WALL MOUNT (W/ CLIP)

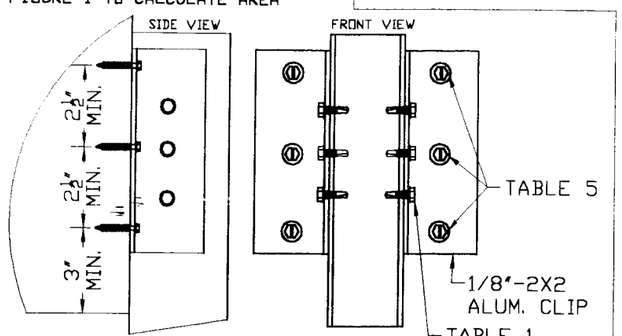

INTERMEDIATE MULLION
WALL MOUNT

TABLE 2
ANGLE OR TUBE - BUILT-OUT MOUNT

Allowable Loads PSF

	ANCHORS	
AREA	A/C	B
10	125	75
15	85	45
20	55	30
25	45	30
30	30	NA
35	30	NA
40	30	NA

NOTES:
1- CONCRETE/WOOD WALLS (ANCHOR TYPE A OR C)
END MULL: USE 3 ANCHORS
INTERM. MULLIONS: USE 6 ANCHORS
2- HOLLOW BLOCK WALLS (ANCHOR TYPE B)
END MULL: USE 4 ANCHORS
INTERM. MULLIONS: USE 8 ANCHORS
3- AREA: SEE FIGURE 1 TO CALCULATE AREA

TABLE 4
Mullion Anchored to Built Out

Allowable Loads PSF

	#10-16x3/4" Drill-Flex Anchor				
AREA	2	3	4	5	6
10	30	45	65	85	95
15	NA	30	45	55	65
20	NA	NA	30	30	45
25	NA	NA	NA	30	30
30	NA	NA	NA	NA	30

NOTES:
1- USE 2 ANCHORS FOR 2" or 3" CLIPS
2- USE 3 ANCHORS FOR 4", 5" or 6" CLIPS
3- END MULLION: USE ONE CLIP
4- INTERMEDIATE MULLIONS: USE TWO CLIPS
5- AREA: SEE FIGURE 1 TO CALCULATE AREA

PRODUCT REVISED
as complying with the Florida Building Code
Acceptance No. 02-0419.01
Expiration Date 10/04/06
By
Miami-Dade Product Control Division

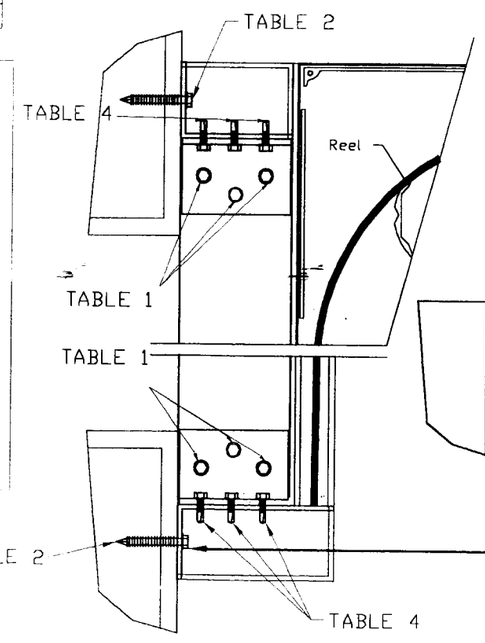

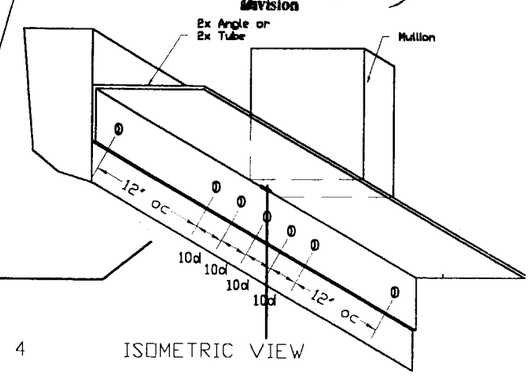

ISOMETRIC VIEW

ANCHOR SCHEDULE

Type	Description	Embed.	Substract	Manufacturer
A	1/4" Tapcon	1 3/4"	Concrete	Elco
B	1/4" Tapcon	1 1/4"	Hollow Block	Elco
C	#14 SS Wood Screws	1 1/2"	Wood (SG= 55)	Elco
D	#10-16x3/4" Drill-Flex	1/8	Aluminum	Elco

EDGE DISTANCE =3"

Manufacturer:
Roller Star
6351 NW 28th WAY
FT. LAUDERDALE,
FLORIDA - 33309
Tel.: (954) 972-4772

Product:
RE1000
EXTRUDED ALUMINUM ROLL SHUTTERS

Engineering:
EngCo Inc.
CA 8116
6971 W. Sunrise Blvd. 104
Plantation, Fl. 33313
Tel.: (954) 585-0304

AUG 07 2001

Engineer Seal
Pedro De Figueiredo
PE 52609

Date: 8/5/01
Scale: NA
Design by: PPMF

Dade County NOA:
APPROVED AS COMPLYING WITH THE SOUTH FLORIDA BUILDING CODE
DATE OCT 04 2001
BY
PRODUCT CONTROL DIVISION
BUILDING CODE COMPLIANCE OFFICE
ACCEPTANCE NO. 01-0424.02

Drawing Number
01-057R

HOOD ASSEMBLY

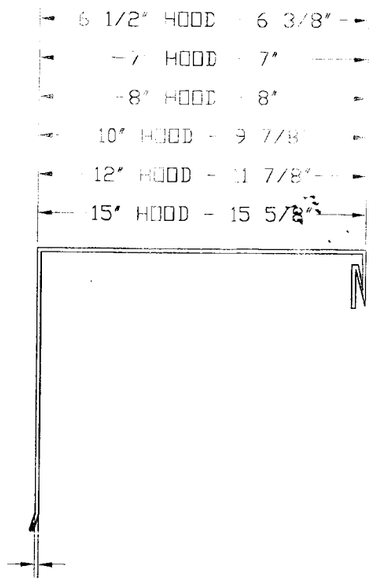

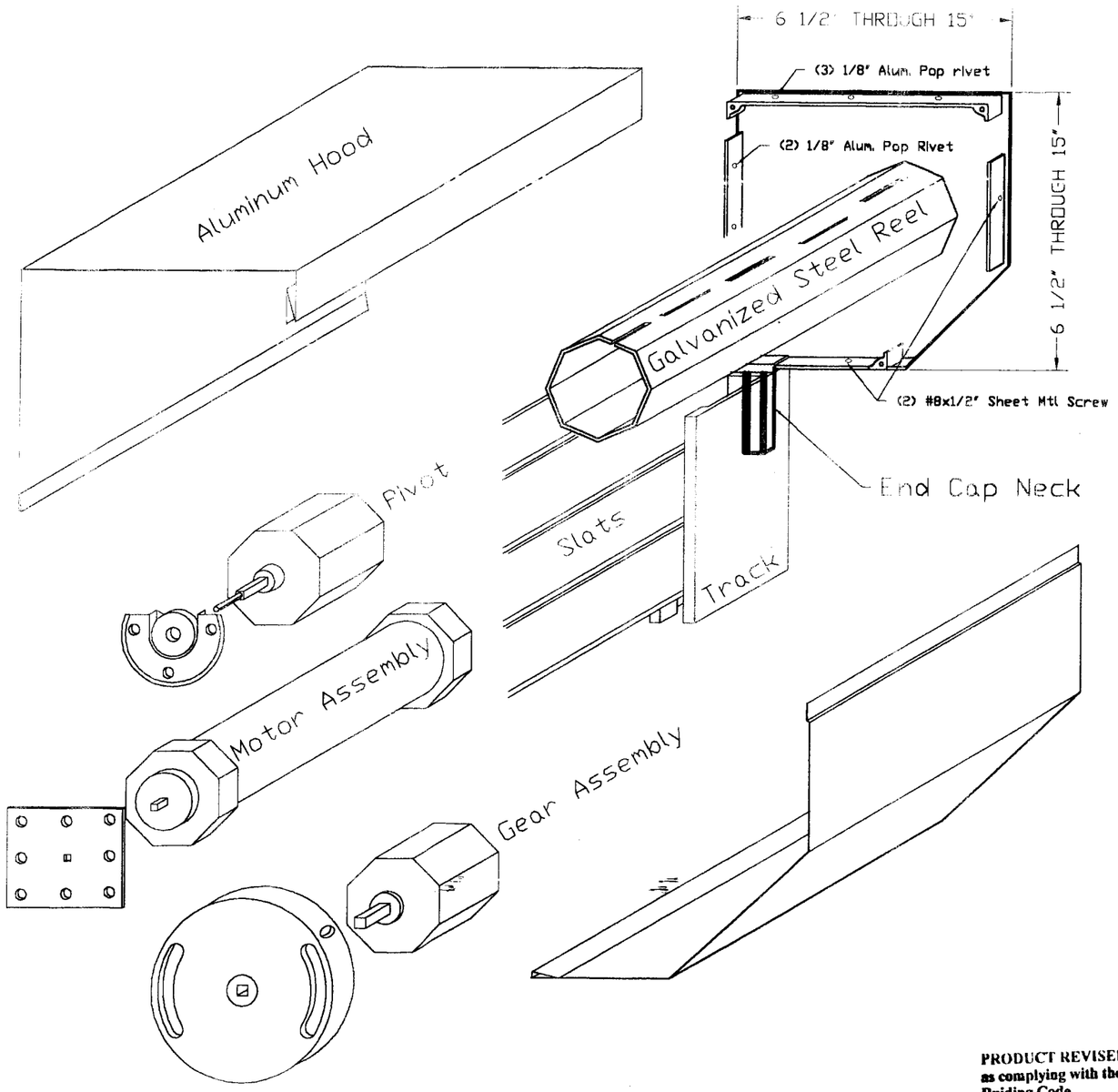

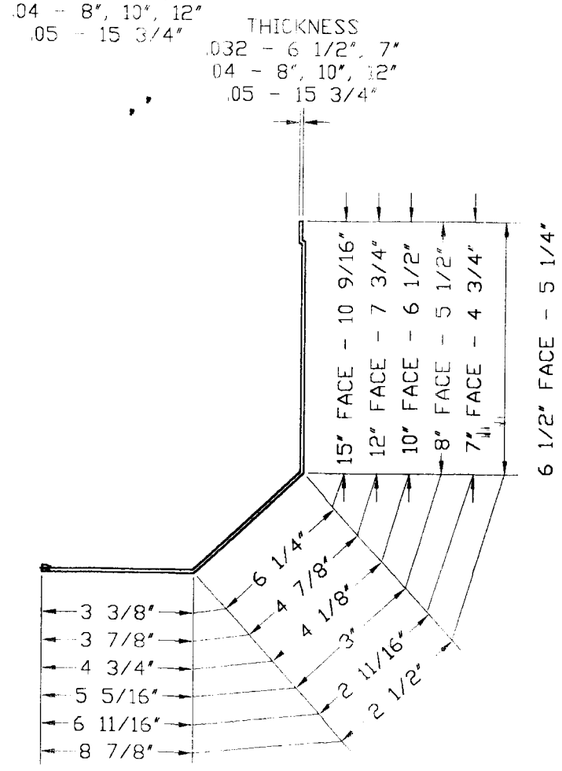

PRODUCT REVISED
as complying with the Florida
Buiding Code
Acceptance No 02-0419.01
Expiration Date 10/09/06
By
Miami Dade Product Control
Division

Manufacturer:
Roller Star
6351 NW 28th WAY
FT LAUDERDALE
FLORIDA 33309
Tel: (954) 972 4772

Product:
RE1000
EXTRUDED ALUMINUM
ROLL SHUTTERS

Engineering:
EngCo Inc.
CA 8116
6971 W. Sunrise Blvd. 104
Plantation, Fl. 33313
Tel: (954) 585 0304

AUG 07 2001
Engineer Seal
Pedro De Figueiredo
PE 52609

Date: 8/5/01
Scale: NA
Design by: PPMF

Dade County NOA:
APPROVED AS COMPLYING WITH THE
SOUTH FLORIDA BUILDING CODE
DATE OCT 04 2001
BY
PRODUCT CONTROL DIVISION
BUILDING CODE COMPLIANCE OFFICE
ACCEPTANCE NO. 01-0924.02

Drawing Number
01-057R

Sheet
13 of 14

MULTIPLE SPAN SHUTTER SLAT TOTAL DEFLECTION

POSITIVE LOAD

UNIT #	(1) Pd	(2) TT	(3) # SPANS	(4) Span	(5) SLAT DEF(A)	(6) STORM BARS TYPE	(6) STORM BARS SPAN	(6) STORM BARS DEF. (B)	(7) HEADER TYPE	(7) HEADER DEF. (C)	(8) TOTAL DEF. (D) D=A+B/2+C/4	(9) Allowable D<=Span/30 or 2"	(10) GS GS=D+1
1													
2													
3													
4													
5													
6													

NEGATIVE LOAD

UNIT #	(1) Pd	(2) TT	(3) # SPANS	(4) Span	(5) SLAT DEF(A)	(6) STORM BARS TYPE	(6) STORM BARS SPAN	(6) STORM BARS DEF. (B)	(7) HEADER TYPE	(7) HEADER DEF. (C)	(8) TOTAL DEF. (D) D=A+B/2+C/4	(9) Allowable D<=Span/30
1												
2												
3												
4												
5												
6												

PROCEDURE:
STEP 1: PROVIDE PROJECT DESIGNED PRESSURE IN PSF AS PER ITEM 4 SHEET 1 OF 14. BASED ON ASCE 7-88
STEP 2: PROVIDE TRACK TO TRACK SHUTTER DIMENSION IN INCHES.
STEP 3: PROVIDE NUMBER OF SPANS: 2 FOR ONE SET OF STORM BARS 3 FOR TWO SETS.
STEP 4: CALCULATE THE SPAN SIZE DIVIDING TT/# OF SPANS. THIS VALUE MUST BE LESS OR EQUAL THE CORRESPONDING VALUE OF TABLE 1.3 ON SHEET 3 OF 14.
STEP 5: CALCULATED SLAT DEFLECTION IN INCHES AS PER TABLE 2.3 OR 3.3.
STEP 6: SELECT APPROPRIATE STORM BAR TYPE AND CORRESPONDING DEFLECTION ON SHEETS 5 OR 6 OF 14.
STEP 7: (IF APPLICABLE) SELECT APPROPRIATE HEADER TYPE AND CORRESPONDING DEFLECTION ON SHEETS 8 OR 9 OF 14.
STEP 8: CALCULATE TOTAL DEFLECTION
STEP 9: CALCULATE AND COMPARE MAXIMUM ALLOWABLE DEFLECTION. IF TOTAL DEFLECTION EXCEEDS THE ALLOWABLE TRY TO UPGRADE THE STORM BAR UNTIL DESIGN IS ACCEPTABLE.
STEP 10: CALCULATE THE SLAT TO GLASS SEPARATION (POSITIVE ONLY). COMPARE WITH GLASS SEPARATION TABLE.
NOTE: USE ADDITIONAL SHEETS IF PROJECT HAVE MORE THAN 6 SHUTTERS.

PRODUCT REVISED
as complying with the Florida Buiding Code
Acceptance No 02-0419.01
Expiration Date 10/04/06
By
Miami Dade Product Control Division

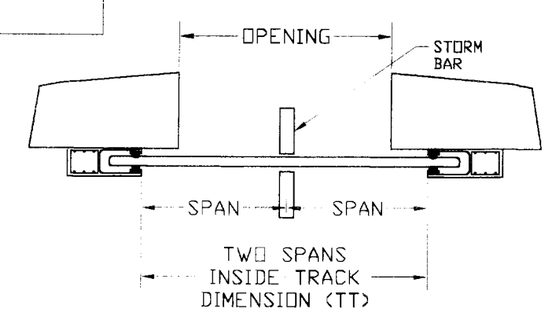

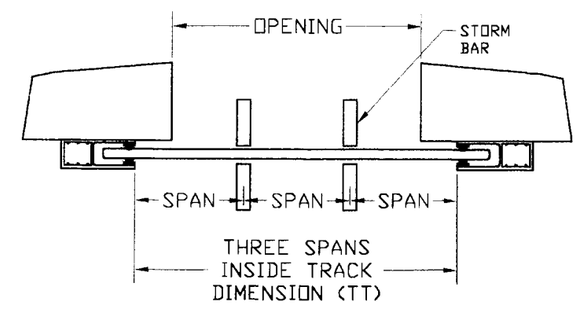

(GS) GLASS SEPARATION:	
LARGE MISSILE IMPACT	WIND LOAD ONLY
4 7/8" -48"<=SPAN<=66 5/8" 4" -30"<SPAN<48" 3 1/2" -SPAN<=30"	3" ALL CONDITIONS

GLASS SEPARATION FOR LARGE MISSILE IMPACT IS APPLICABLE FOR INSTALLATION UP TO 30 FT. OF GRADE DUE TO LARGE MISSILE IMPACT. WIND LOAD GLASS SEPARATION APPLIES TO INSTALLATION ABOVE 30 FT. OF GRADE.

Manufacturer:
Roller Star
6351 NW 28th WAY
FT. LAUDERDALE,
FLORIDA - 33309
Tel.: (954) 972-4772

Product:
RE1000
EXTRUDED ALUMINUM ROLL SHUTTERS

Engineering:
EngCo Inc.
CA 8116
6971 W. Sunrise Blvd. 104
Plantation, Fl. 33313
Tel.: (954) 585-0304

AUG 07 2001

Engineer Seal
Pedro De Figueiredo
PE 52609

Date: 8/5/01
Scale: 1:1
Design by: PPMF

Dade County NOA
APPROVED AS COMPLYING WITH THE SOUTH FLORIDA BUILDING CODE
DATE OCT 04 2001
BY
PRODUCT CONTROL DIVISION
BUILDING CODE COMPLIANCE OFFICE
ACCEPTANCE NO. 01-0924.02

Drawing Number
01-057R