MIAMI-DADE

BUILDING CODE COMPLIANCE OFFICE (BCCO)
PRODUCT CONTROL DIVISION

MIAMI-DADE COUNTY, FLORIDA
METRO-DADE FLAGLER BUILDING
140 WEST FLAGLER STREET, SUITE 1603
MIAMI, FLORIDA 33130-1563
(305) 375-2901 FAX (305) 375-2908

NOTICE OF ACCEPTANCE (NOA)

Signature Storm Protection, Inc.
1801 N.W. First Avenue
Boca Raton, FL 33432

SCOPE:

This NOA is being issued under the applicable rules and regulations governing the use of construction materials. The documentation submitted has been reviewed by Miami-Dade County Product Control Division and accepted by the Board of Rules and Appeals (BORA) to be used in Miami Dade County and other areas where allowed by the Authority Having Jurisdiction (AHJ).

This NOA shall not be valid after the expiration date stated below. The Miami-Dade County Product Control Division (In Miami Dade County) and/or the AHJ (in areas other than Miami Dade County) reserve the right to have this product or material tested for quality assurance purposes. If this product or material fails to perform in the accepted manner, the manufacturer will incur the expense of such testing and the AHJ may immediately revoke, modify, or suspend the use of such product or material within their jurisdiction. BORA reserves the right to revoke this acceptance, if it is determined by Miami-Dade County Product Control Division that this product or material fails to meet the requirements of the applicable building code.

This product is approved as described herein, and has been designed to comply with the High Velocity Hurricane Zone of the Florida Building Code.

DESCRIPTION: "6.8"-HR" Aluminum Accordion Shutter

APPROVAL DOCUMENT: Drawing No. 01-850, titled "6.8-HR Accordion Shutter", sheets 1 through 11 of 11, prepared, signed sealed by V.J. Knezevich, P.E., dated 02/08/01, bearing the Miami-Dade County Product Control Approval stamp with the Notice of Acceptance number and approval date by the Miami-Dade County Product Control Division.

MISSILE IMPACT RATING: Large and Small Missile Impact

LABELING: Each unit shall bear a permanent label with the manufacturer's name or logo, city, state and following statement: "Miami-Dade County Product Control Approved", unless otherwise noted herein.

RENEWAL of this NOA shall be considered after a renewal application has been filed and there has been no change in the applicable building code negatively affecting the performance of this product.

TERMINATION of this NOA will occur after the expiration date or if there has been a revision or change in the materials, use, and/or manufacture of the product or process. Misuse of this NOA as an endorsement of any product, for sales, advertising or any other purposes shall automatically terminate this NOA. Failure to comply with any section of this NOA shall be cause for termination and removal of NOA.

ADVERTISEMENT: The NOA number preceded by the words Miami-Dade County, Florida, and followed by the expiration date may be displayed in advertising literature. If any portion of the NOA is displayed, then it shall be done in its entirety.

INSPECTION: A copy of this entire NOA shall be provided to the user by the manufacturer or its distributors and shall be available for inspection at the job site at the request of the Building Official.

This NOA **revises NOA # 01-0301.03** and, consists of this page 1 as well as approval document mentioned above. The submitted documentation was reviewed by **Raul Rodriguez.**

PRODUCT CONTROL ACCEPTED

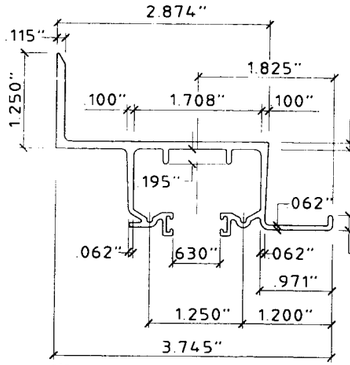

1 **WALL HEADER (6.8 ONLY)**
SCALE: HALF SIZE

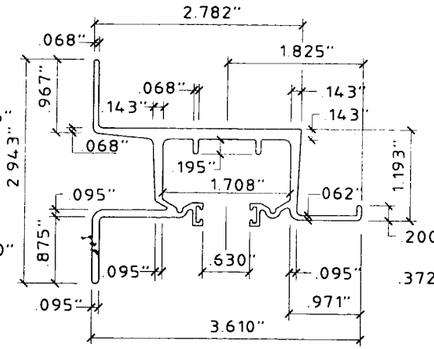

2 **WALL HEADER**
SCALE: HALF SIZE

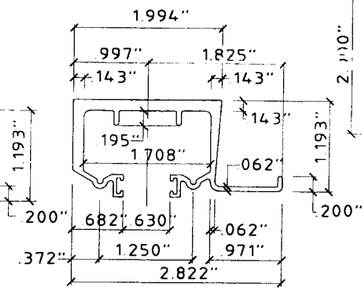

3 **HEADER**
SCALE: HALF SIZE

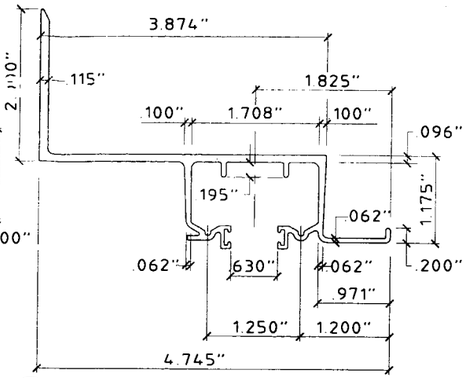

4 **BUILD OUT WALL HEADER (6.8 ONLY)**
SCALE: HALF SIZE

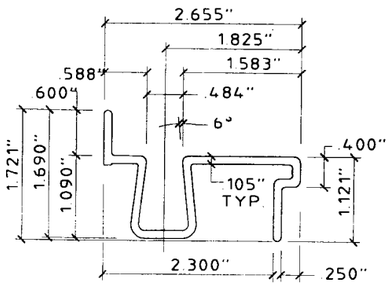

5 **BASE SILL**
SCALE: HALF SIZE

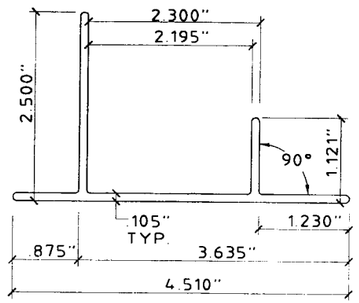

6 **BASE TRACK**
SCALE: HALF SIZE

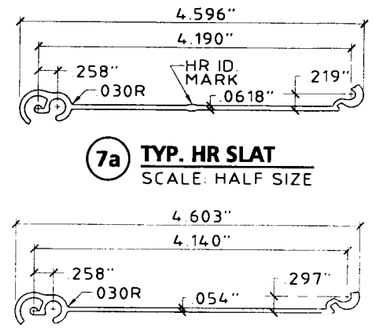

7a **TYP. HR SLAT**
SCALE: HALF SIZE

7 **TYP. 6.8 SLAT**
SCALE: HALF SIZE

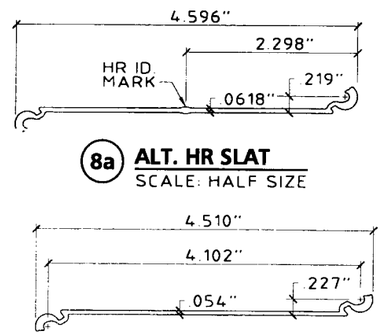

8a **ALT. HR SLAT**
SCALE: HALF SIZE

8 **ALT. 6.8 SLAT**
SCALE: HALF SIZE

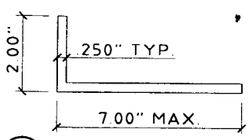

9a **ANGLE (HR ONLY)**
SCALE: 3" = 1' - 0"

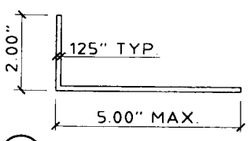

9 **ANGLE (6.8 ONLY)**
SCALE: 3" = 1' - 0"

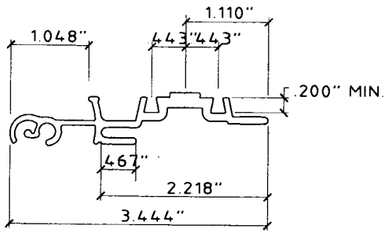

10 **MALE / FEMALE LOCK (6.8 ONLY)**
SCALE: HALF SIZE

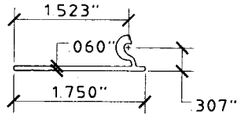

11a **HR STARTER**
SCALE: HALF SIZE

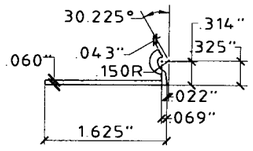

11 **6.8 STARTER**
SCALE: HALF SIZE

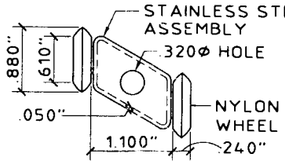

TYP. AT EVERY OTHER INSIDE JOINT AT TOP.

12 **ROLLER ASSEMBLY**
SCALE: HALF SIZE

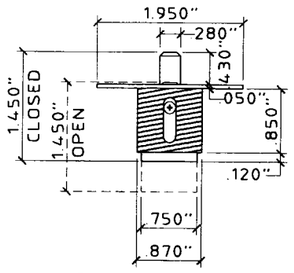

13 **BRASS PUSH LOCK**
SCALE: HALF SIZE

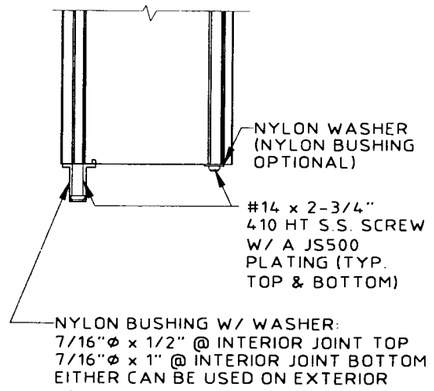

14 **BUSHING ASSEMBLY DETAIL**
SCALE: HALF SIZE

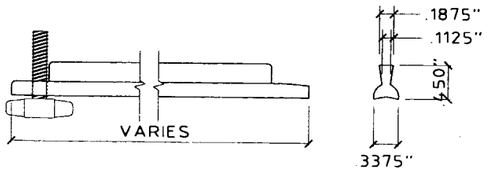

FOR 6.8 AND HR WHERE LOCK PINS ARE USED, THEY ARE ENGAGED IN THE STACKED POSITION AND ARE NOT REQ'D IN THE CLOSED POSITION.

15 **ALUMINUM OR PVC LOCK PIN (NOT REQUIRED)**
SCALE: HALF SIZE

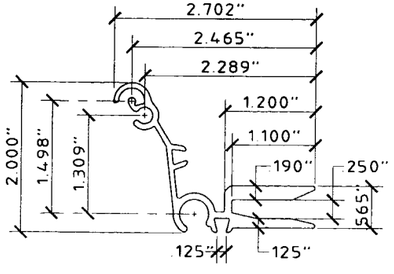

16 **CENTER MATE 1**
SCALE: HALF SIZE

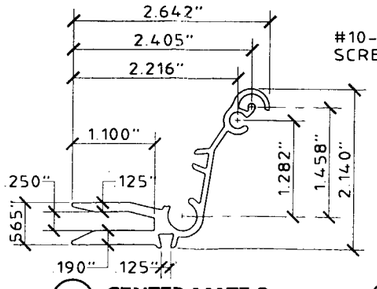

17 **CENTER MATE 2**
SCALE: HALF SIZE

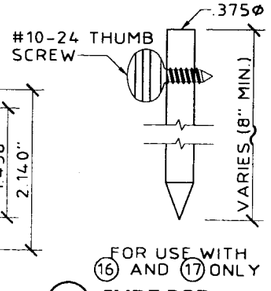

FOR USE WITH 16 AND 17 ONLY

18 **SLIDE RODS**
SCALE: HALF SIZE

GENERAL NOTES:

1. THESE ACCORDION SHUTTER SYSTEMS ARE DESIGNED IN ACCORDANCE WITH THE SOUTH FLORIDA BUILDING CODE, MIAMI-DADE COUNTY 1994 EDITION.
2. POSITIVE AND NEGATIVE DESIGN PRESSURE CALCULATIONS SHALL BE PERFORMED FOR SPECIFIC JOBS IN ACCORDANCE WITH ASCE 7-88 "MINIMUM DESIGN LOADS FOR BUILDINGS AND OTHER STRUCTURES". TABLES SHALL BE REFERENCED AT APPROPRIATE DESIGN LOADS.
3. ALL EXTRUSIONS SHOWN SHALL BE 6063-T6 ALUMINUM ALLOY, U.O.N., WITH A MINIMUM Fy OF 30.125 K.S.I.
4. EACH SHUTTER ASSEMBLY SHALL BE PERMANENTLY LABELED AT THE BOTTOM END OF THE LOCKING CENTERMATE OR SLAT AS FOLLOWS:
   SIGNATURE STORM PROTECTION, INC.
   BOCA RATON, FLORIDA
   MIAMI-DADE COUNTY PRODUCT
   CONTROL APPROVED
5. ALL BOLTS AND WASHERS SHALL BE STAINLESS STEEL WITH A MINIMUM TENSILE STRENGTH OF 60 K.S.I., U.O.N. POP RIVETS SHALL BE 1/4"Φ OR 3/16"Φ 5052 ALUM. ALLOY.
6. ALL SHUTTERS SHALL HAVE A LOCKING MECHANISM CONSISTING OF THUMBSCREW OR PUSH LOCK AT CENTER OR SIDE CLOSURE.
7. THE DETAILS AND SPECIFICATIONS SHOWN HEREIN REPRESENT THE PRODUCTS TESTED FOR IMPACT, CYCLIC AND UNIFORM STATIC AIR PRESSURE IN CONFORMANCE W/ MIAMI-DADE COUNTY PROTOCOLS PA 201, 202, AND 203.
8. DESIGN IS BASED ON CONSTRUCTION TESTING CORPORATION (C.T.C.) TEST REPORTS No. 98-050 & No. 00-013.
9. TOP AND BOTTOM DETAILS MAY BE INTERCHANGED AS FIELD CONDITIONS REQUIRE.
10. FLOOR TRACKS MAY BE REMOVABLE AT NON-STACKING LOCATIONS. USE REMOVABLE ANCHORS SUCH AS POWERS CALK-IN ANCHORS.
11. THE PERMIT HOLDER SHALL VERIFY THE ADEQUACY OF THE EXISTING STRUCTURE TO SUSTAIN THE NEW SUPERIMPOSED LOADS AND TO VERIFY ALL DIMENSIONS AT THE JOB SITE BEFORE COMMENCING WITH THE WORK.
12. ALL EXTRUSIONS CAN BE USED FOR THE 6.8 OR THE HR ACCORDION SHUTTER SYSTEMS, U.O.N.
13. THE HR ACCORDION SHUTTER SLAT HAS A BULGE @ CENTER OF SLAT TO DISTINGUISH IT FROM THE 6.8 ACCORDION SHUTTER SLAT.

PRODUCT REVISED
as complying with the Florida Building Code
Acceptance No. 02-0419.03
Expiration Date 04/03/06
By
Miami Dade Product Control Division

APPROVED AS COMPLYING WITH THE SOUTH FLORIDA BUILDING CODE
DATE 04/03/2001
BY Hedmy A. Medar
PRODUCT CONTROL DIVISION
BUILDING CODE COMPLIANCE OFFICE
ACCEPTANCE NO. 01-0301.03

KNEZEVICH & ASSOCIATES, INC.
CONSULTING ENGINEERS • PRODUCT TESTING
1260 N. UNIVERSITY DRIVE, SUITE 180 • FORT LAUDERDALE, FL 33322
TEL: (954) 382-2800 • FAX: (954) 382-2989 • FLORIDA COA #3205
WEBSITE: WWW.KNEZEVICH.COM • E-MAIL: KA@KNEZEVICH.COM

COPYRIGHT © 2001 KNEZEVICH & ASSOCIATES, INC.

6.8 SYSTEM LICENSED BY SOUTHERN SHUTTER ASSOCIATION

6.8 – HR
ACCORDION SHUTTER

Signature Storm Protection, Inc.
Installation & Service
1801 N.W. 1ST AVENUE
BOCA RATON, FL 33432
TEL: (561) 391-5194
FAX: (561) 391-1023

V.J. KNEZEVICH
PROFESSIONAL ENGINEER
FL License No: PE 0010983

FEB 22 2001

revisions			
no	date	by	description
1	03/19/99	VJK	COUNTY COMMENTS
2	04/13/00	VJK	GENERAL REVISIONS
3	06/22/00	VJK	ADD HR ACCORDION SYSTEM
4	12/27/00	VJK	COUNTY COMMENTS
5	02/05/01	AS	GENERAL REVISIONS
6	02/08/01	AS	COUNTY COMMENTS

SSA I.D.# 0221019825 4D

date 12/08/98	
scale AS NOTED	drawn by MC
design by VJK	checked by VJK
drawing no. 01-850	
sheet 1 of 11	

02/21/01 15:08

6.8 ACCORDION SHUTTER

NOT APPLICABLE TO HR ACCORDION SHUTTER

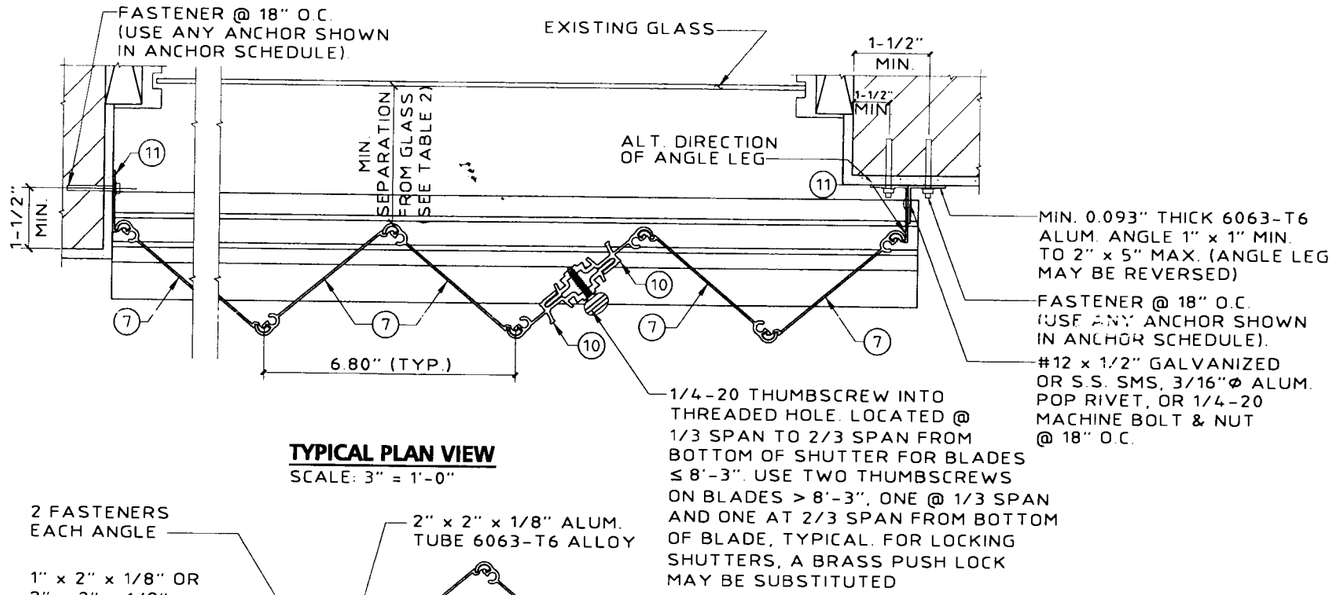

TYPICAL PLAN VIEW

SCALE: 3" = 1'-0"

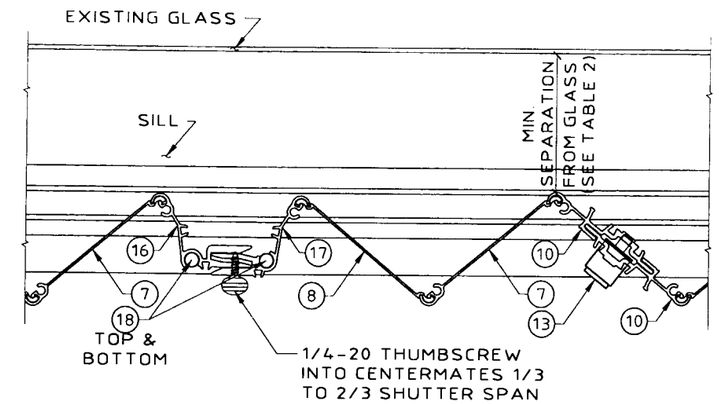

MULTIPLE SHUTTER ASSEMBLY

SCALE: 3" = 1'-0"

NOTE:
STARTER (11) LOCATION MUST BE ADJUSTED TO INSURE FULL DEPLOYMENT OF SHUTTER AND COMPLETE INTERLOCKING OF ADJACENT BLADES.

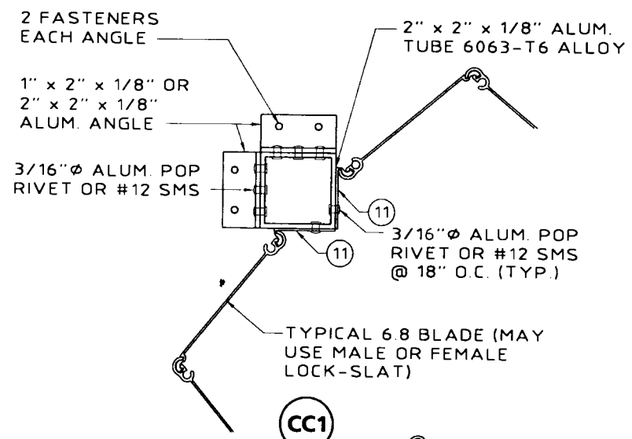

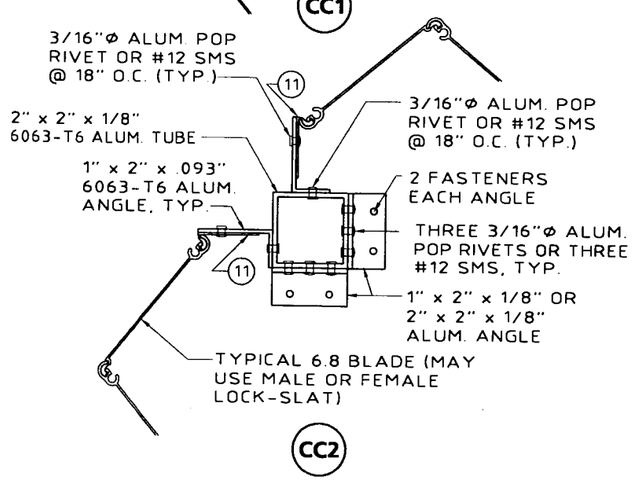

TYPICAL CORNER CLOSURE DETAILS

SCALE: 3" = 1'-0"

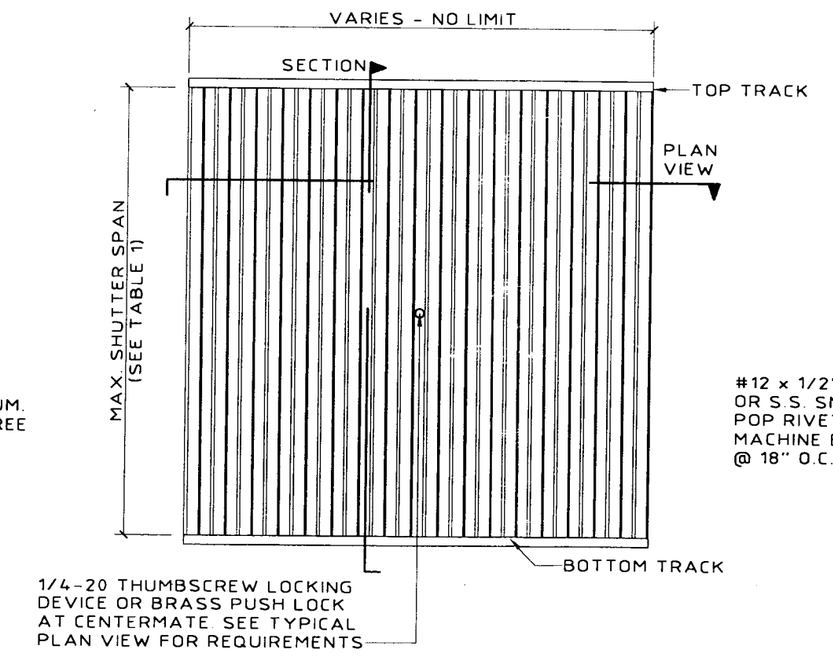

TYPICAL ELEVATION

N.T.S.

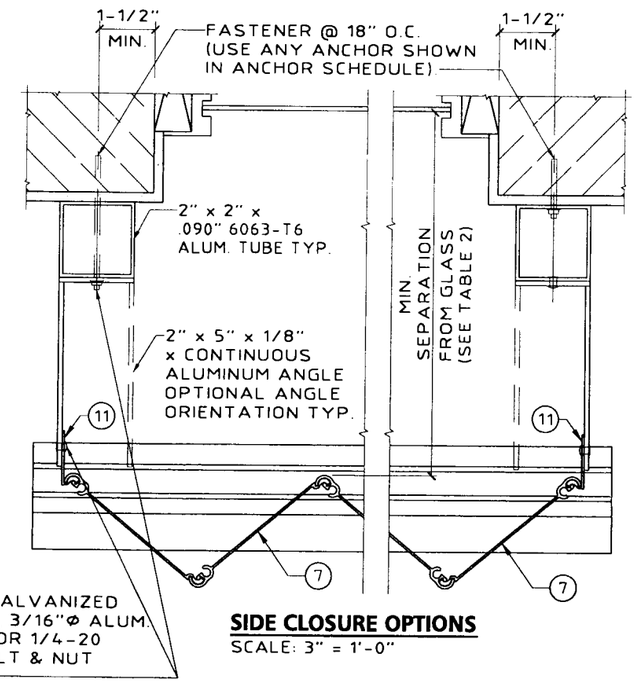

SIDE CLOSURE OPTIONS

SCALE: 3" = 1'-0"

PRODUCT REVISED
as complying with the Florida Buiding Code
Acceptance No. 02-0419.03
Expiration Date 04/03/06
By
Miami Dade Product Control Division

APPROVED AS COMPLYING WITH THE SOUTH FLORIDA BUILDING CODE
DATE 04/03/2001
BY
PRODUCT CONTROL DIVISION
BUILDING CODE COMPLIANCE OFFICE
ACCEPTANCE NO. 01-0301.03

KNEZEVICH & ASSOCIATES, INC.
CONSULTING ENGINEERS • PRODUCT TESTING
1260 N. UNIVERSITY DRIVE, SUITE 180 • FORT LAUDERDALE, FL 33322
TEL: (954) 382-2800 • FAX: (954) 382-2989 • FLORIDA COA #3205
WEBSITE: WWW.KNEZEVICH.COM • E-MAIL: KA@KNEZEVICH.COM

COPYRIGHT © 2001 KNEZEVICH & ASSOCIATES, INC

68 SYSTEM LICENSED BY SOUTHERN SHUTTER ASSOCIATION

6.8 - HR
ACCORDION SHUTTER

Signature Storm Protection, Inc.
Installation & Service
1801 N.W. 1 ST AVENUE BOCA RATON, FL 33432
TEL: (561) 391-7519
FAX: (561) 391-1023

V.J. KNEZEVICH
PROFESSIONAL ENGINEER
FL License No: PE 0010983
FEB 22 2001

revisions

no	date	by	description
1	03/19/99	VJK	COUNTY COMMENTS
2	04/13/00	JWK	GENERAL REVISIONS
3	06/22/00	VJK	ADD HR ACCORDION SYSTEM
4	12/27/00	VJK	COUNTY COMMENTS
5	02/05/01	AS	GENERAL REVISIONS
6	02/08/01	AS	COUNTY COMMENTS

SSA I.D.# 02210198254D

date 12/08/98
scale AS NOTED
drawn by MC
design by VJK
checked by VJK
drawing no. 01-850
sheet 2 of 11

02/21/01 15:09

6.8 ACCORDION SHUTTER
NOT APPLICABLE TO HR ACCORDION SHUTTER

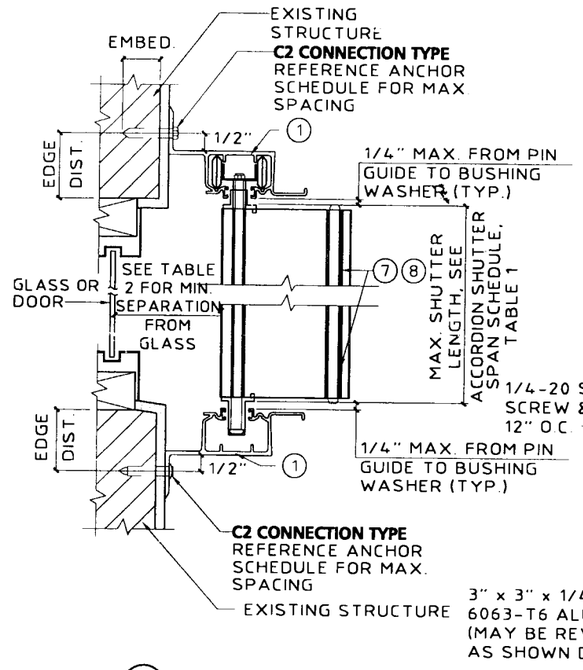

A WALL MOUNT SECTION
SCALE : 3"= 1'- 0"

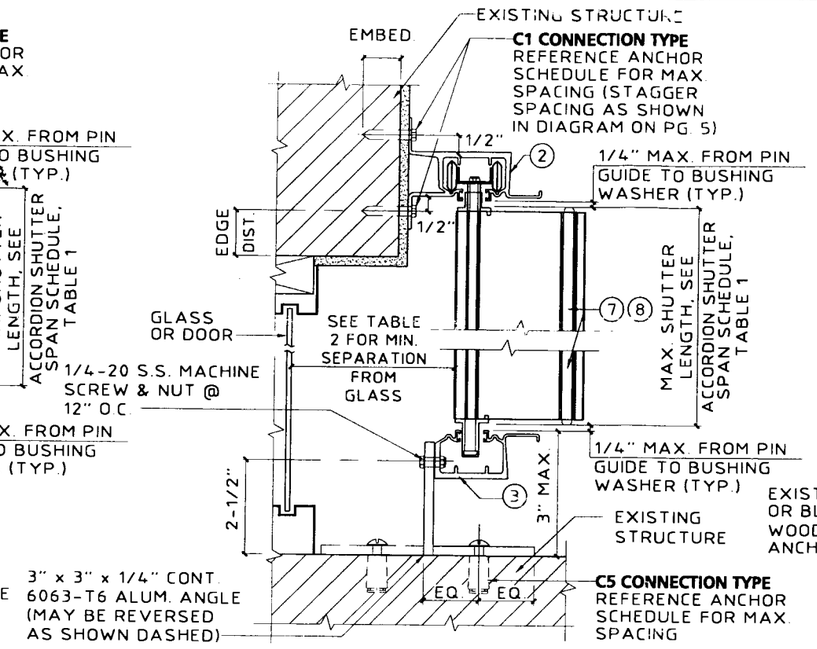

B WALL MOUNT SECTION
SCALE : 3"= 1'- 0"

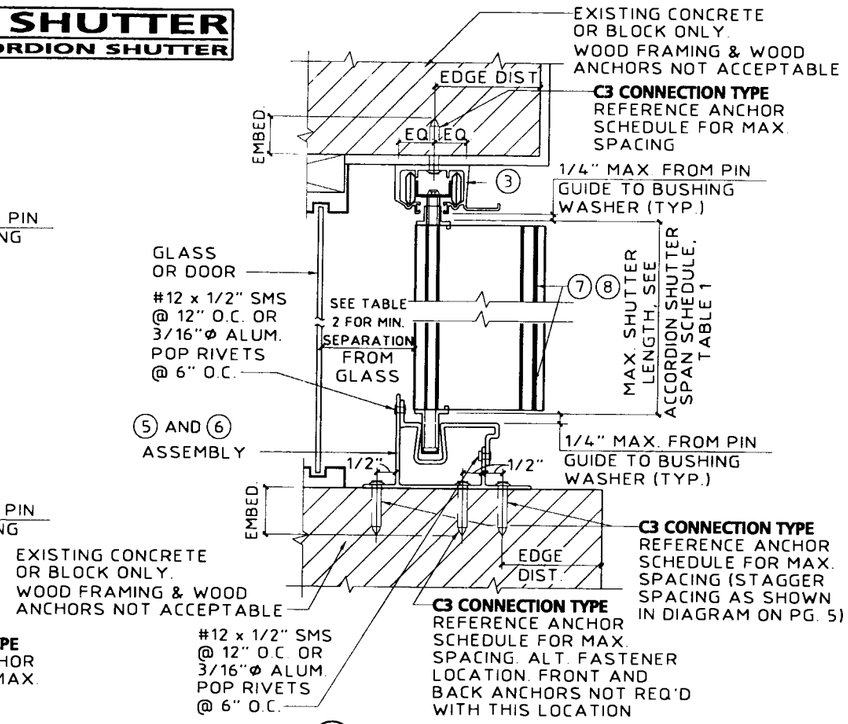

C CEILING / INSIDE MOUNT SECTION
SCALE : 3"= 1'- 0"

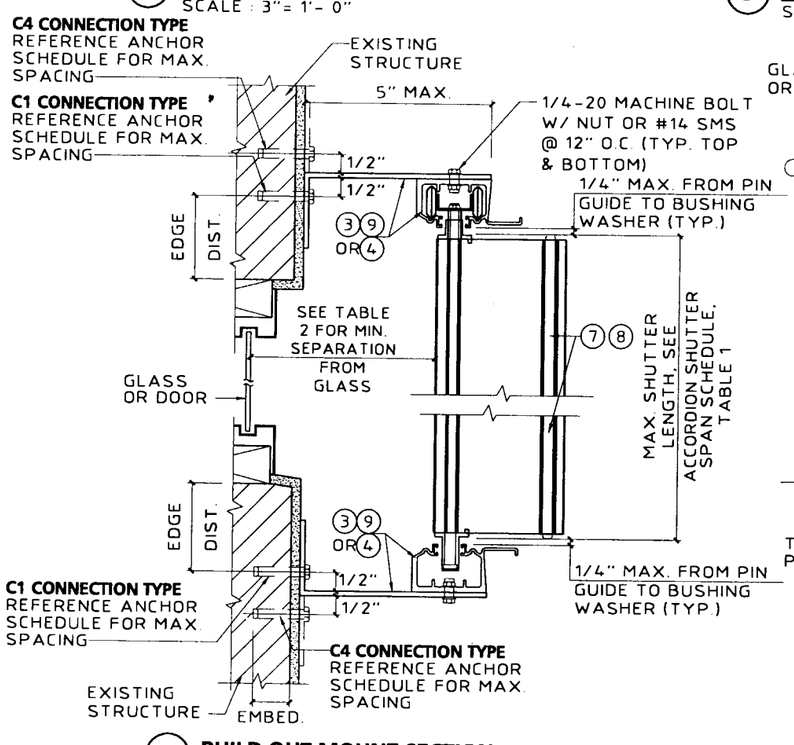

D BUILD OUT MOUNT SECTION
SCALE : 3"= 1'- 0"

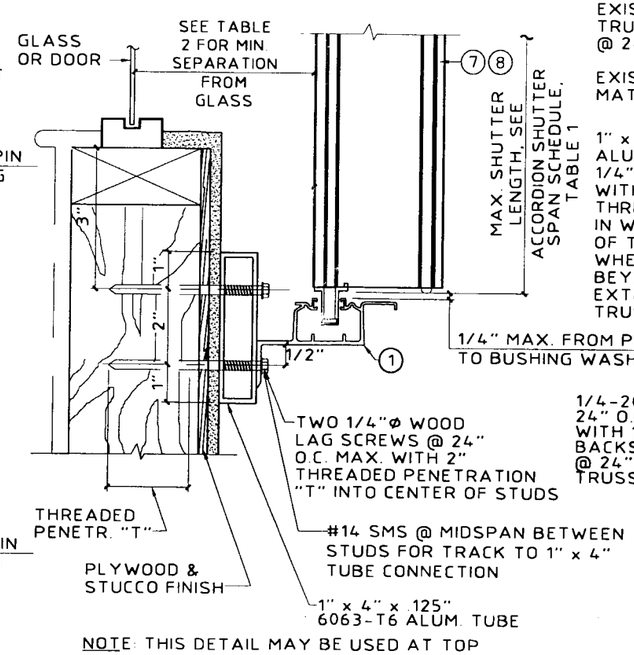

NOTE: THIS DETAIL MAY BE USED AT TOP
MAX. DESIGN LOAD = 72 P.S.F.

E WALL MOUNT SECTION
SCALE : 3"= 1'- 0"

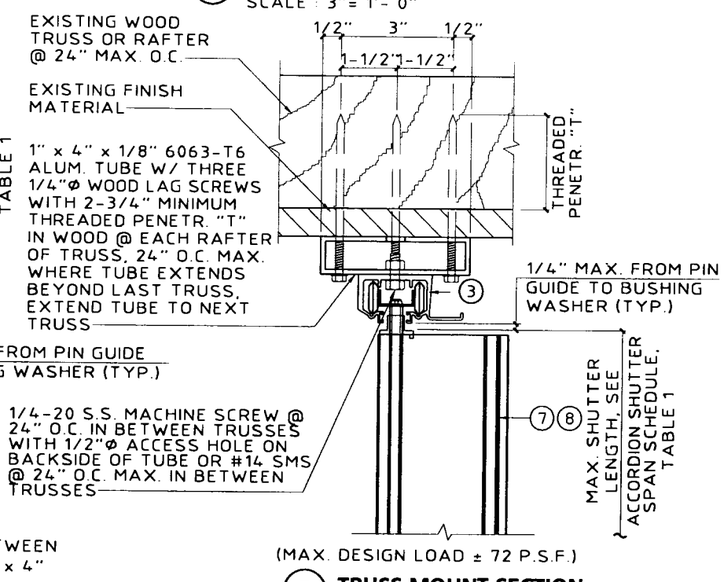

(MAX. DESIGN LOAD ± 72 P.S.F.)

F TRUSS MOUNT SECTION
SCALE : 3"= 1'- 0"

PRODUCT REVISED
as complying with the Florida Building Code
Acceptance No. 02-0419.03
Expiration Date 04/03/06
By
Miami-Dade Product Control Division

APPROVED AS COMPLYING WITH THE SOUTH FLORIDA BUILDING CODE
DATE 04/03/2001
BY Helmy A. Mahr
PRODUCT CONTROL DIVISION
BUILDING CODE COMPLIANCE OFFICE
ACCEPTANCE NO. 01-0301.03

KNEZEVICH & ASSOCIATES, INC.
CONSULTING ENGINEERS • PRODUCT TESTING
1260 N. UNIVERSITY DRIVE, SUITE 180 • FORT LAUDERDALE, FL 33322
TEL: (954) 382-2800 • FAX: (954) 382-2989 • FLORIDA COA #3205
WEBSITE: WWW.KNEZEVICH.COM • E-MAIL: KA@KNEZEVICH.COM

COPYRIGHT © 2001 KNEZEVICH & ASSOCIATES, INC.

6.8 SYSTEM LICENSED BY SOUTHERN SHUTTER ASSOCIATION

6.8 – HR
ACCORDION SHUTTER

Signature Storm Protection, Inc.
Installation & Service
1801 N.W. 1ST AVENUE
BOCA RATON, FL 33432
TEL: (561) 391-5191
FAX: (561) 391-1023

V.J. KNEZEVICH
PROFESSIONAL ENGINEER
Fl. Licence No: PE 0010983

FEB 22 2001

revisions

no	date	by	description
1	03/19/99	VJK	COUNTY COMMENTS
2	06/13/00	JWK	GENERAL REVISIONS
3	06/22/00	VJK	ADD HR ACCORDION SYSTEM
4	12/27/00	VJK	COUNTY COMMENTS
5	02/05/01	JAS	GENERAL REVISIONS
6	02/08/01	JAS	COUNTY COMMENTS

SSA I.D.# 0221019825AD

date 12/08/98	
scale AS NOTED	drawn by MC
design by VJK	checked by VJK
drawing no 01-850	
sheet 3 of 11	

02/21/01 15:10

6.8 ACCORDION SHUTTER
NOT APPLICABLE TO HR ACCORDION SHUTTER

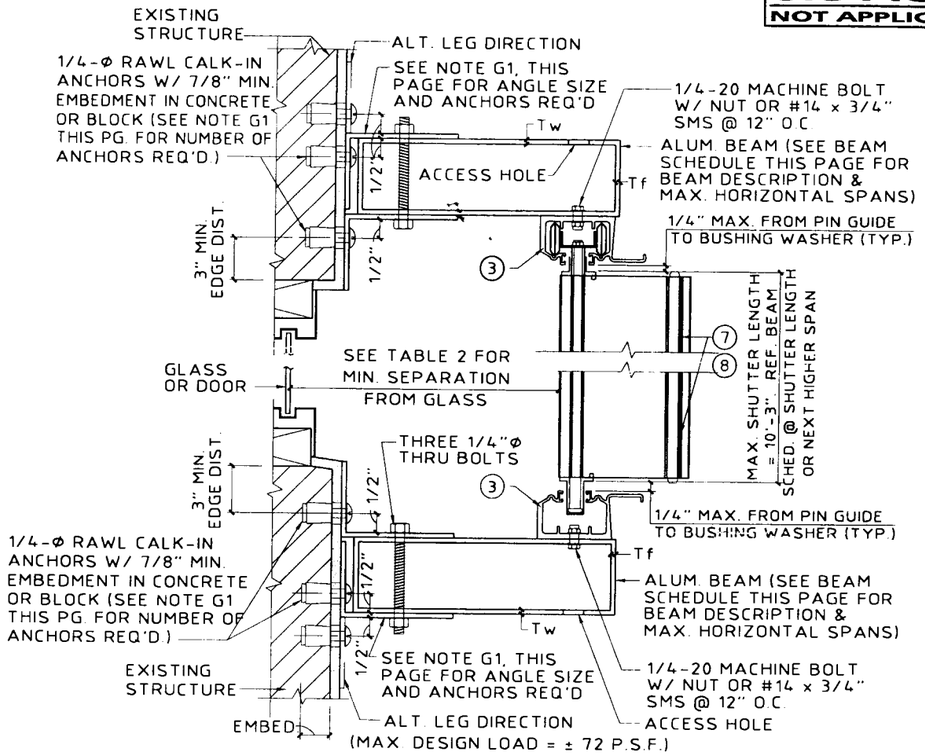

G BUILD-OUT MOUNT SECTION
SCALE : 3"= 1'- 0"

* BEAM SCHEDULE			
DESCRIPTION	SHUTTER SPAN	BOTTOM BEAM	TOP BEAM
2" x 5" Tw = .125" Tf = .125"	5'-0"	9'-5"	9'-0"
	8'-0"	8'-1"	8'-0"
	10'-3"	7'-4"	7'-4"
2" x 7" Tw = .072" Tf = .130"	5'-0"	11'-4"	8'-5"
	8'-0"	9'-8"	7'-6"
	10'-3"	8'-9"	7'-0"
2" x 9" Tw = .072" Tf = .224"	5'-0"	15'-5"	9'-4"
	8'-0"	13'-2"	8'-4"
	10'-3"	11'-11"	7'-9"

*
USE BEAM SCHEDULE FOR DETAIL G.

TOP & BOTTOM BEAMS MAY BE USED TOGETHER OR IN COMBINATION WITH OTHER CONNECTION DETAILS. WHERE USED TOGETHER, BEAM MUST BE LIMITED TO TOP BEAM SPANS.

NOTE G1:

2" x 3" x 1/4" 6063-T6 ALUM. ANGLE TOP & BOTTOM. FOR 2" x 5" & 2" x 7" BEAM, USE THREE 1/4"Φ POWERS CALK-IN ANCHORS @ 3" O.C. IN EACH ANGLE AND USE 8" LONG ANGLES. FOR 2" x 9" BEAM, USE FOUR 1/4"Φ CALK-IN ANCHORS @ 3" O.C. IN EACH ANGLE AND USE 11" LONG ANGLES

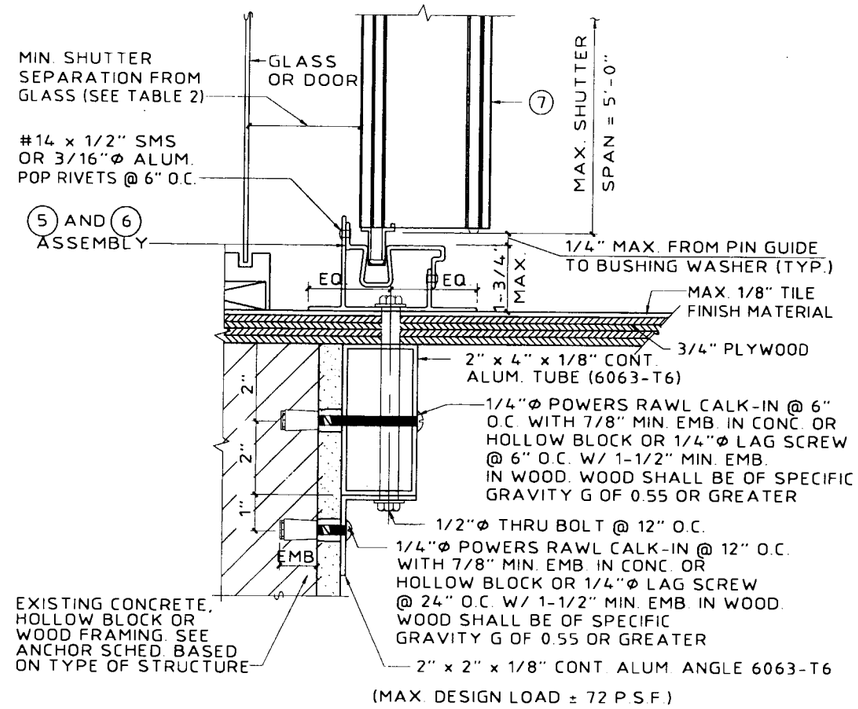

I PASS THRU DETAIL
SCALE : 3"= 1'- 0"

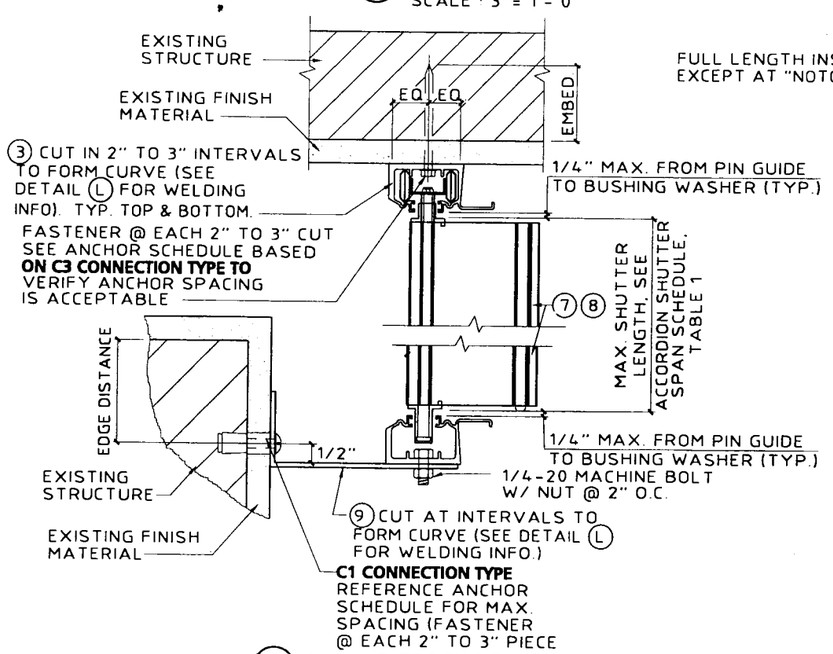

K CURVED TRACK DETAIL
SCALE : 3"= 1'- 0"

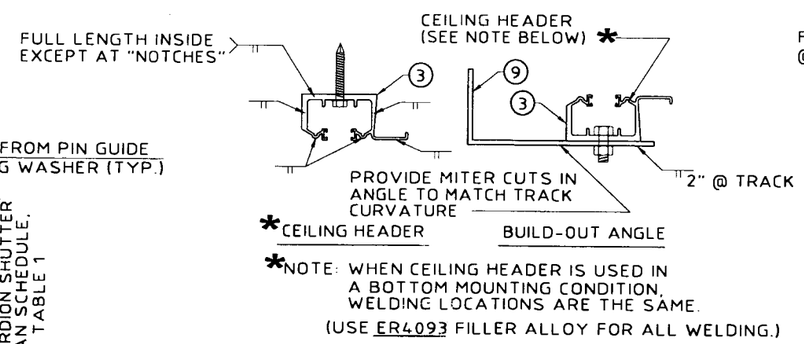

*NOTE: WHEN CEILING HEADER IS USED IN A BOTTOM MOUNTING CONDITION, WELDING LOCATIONS ARE THE SAME.

(USE ER4093 FILLER ALLOY FOR ALL WELDING.)

L WELDING DETAILS
SCALE : 3"= 1'- 0"

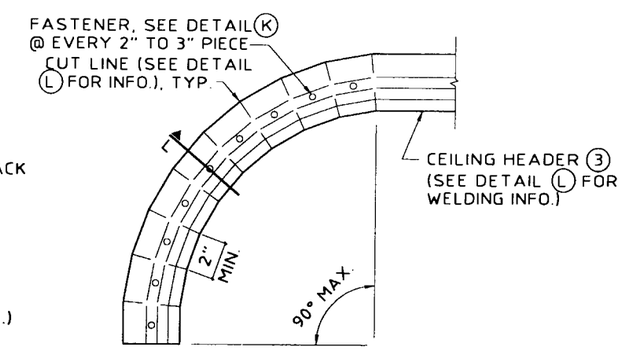

CURVED TRACK PLAN VIEW
N.T.S.

PRODUCT REVISED
as complying with the Florida Buiding Code
Acceptance No 02-0419.03
Expiration Date 04/03/06
By
Miami Dade Product Control Division

APPROVED AS COMPLYING WITH THE SOUTH FLORIDA BUILDING CODE
DATE 04/03/2001
BY
PRODUCT CONTROL DIVISION
BUILDING CODE COMPLIANCE OFFICE
ACCEPTANCE NO 01-0301.03

KNEZEVICH & ASSOCIATES, INC.
CONSULTING ENGINEERS • PRODUCT TESTING
1260 N. UNIVERSITY DRIVE, SUITE 180 • FORT LAUDERDALE, FL 33322
TEL: (954) 382-2800 • FAX: (954) 382-2989 • FLORIDA COA #3205
WEBSITE: WWW.KNEZEVICH.COM • E-MAIL: KA@KNEZEVICH.COM

COPYRIGHT © 2001 KNEZEVICH & ASSOCIATES, INC.

6.8 SYSTEM LICENSED BY SOUTHERN SHUTTER ASSOCIATION

6.8 – HR ACCORDION SHUTTER

Signature Storm Protection, Inc.
Installation & Service
1801 N.W. 1ST AVENUE BOCA RATON, FL 33432
TEL: (561) 391-5191 FAX: (561) 391-1023

V.J. KNEZEVICH
PROFESSIONAL ENGINEER
FL License No: PE 0019983
FEB 22 2001

revisions			
no	date	by	description
1	03/19/99	VJK	COUNTY COMMENTS
2	04/19/00	WK	GENERAL REVISIONS
3	06/22/00	VJK	ADD HR ACCORDION SYS.
4	12/27/00	VJK	COUNTY COMMENTS
5	02/05/01	AS	GENERAL REVISIONS
6	02/08/01	AS	COUNTY COMMENTS

SSA I.D.# 02210198254D

date 12/08/98
scale AS NOTED
drawn by MC
design by VJK
checked by VJK
drawing no 01-850
sheet 4 of 11

6.8 ACCORDION SHUTTER

NOT APPLICABLE TO HR ACCORDION SHUTTER

ANCHOR SCHEDULE

FASTENER SPACING (INCHES) REQUIRED FOR VARIOUS DESIGN LOADS AND SPANS

EXISTING STRUCTURE	ANCHOR TYPE	LOAD (W) P.S.F. MAX. (SEE NOTE 1)	MIN. 2" EDGE DISTANCE															MIN. 3" EDGE DISTANCE													
			SPANS UP TO 6' - 0" (SEE NOTE 1)					SPANS UP TO 8' - 8" (SEE NOTE 1)					SPANS UP TO 12' - 10" (SEE NOTE 1)					SPANS UP TO 6' - 0" (SEE NOTE 1)					SPANS UP TO 8' - 8" (SEE NOTE 1)					SPANS UP TO 12' - 10" (SEE NOTE 1)				
			CONNECTION TYPE (SEE NOTE 3)					CONNECTION TYPE (SEE NOTE 3)					CONNECTION TYPE (SEE NOTE 3)					CONNECTION TYPE (SEE NOTE 3)					CONNECTION TYPE (SEE NOTE 3)					CONNECTION TYPE (SEE NOTE 3)				
			C1	C2	C3	C4	C5	C1	C2	C3	C4	C5	C1	C2	C3	C4	C5	C1	C2	C3	C4	C5	C1	C2	C3	C4	C5	C1	C2	C3	C4	C5
CONCRETE	1/4"Φ ITW OR ELCO TAPCON W/ 1-3/4" MIN. EMBEDMENT (MIN. 3,000 P.S.I. CONCRETE)	48.0	12	12	12	12	11	12	12	10	12	7	12	12	6	12	5	12	12	12	12	12	12	12	12	12	9	12	12	8	12	6
		62.0	12	12	11	12	8	12	12	7	12	5	12	8	5	10	4	12	12	12	12	10	12	12	10	12	7	12	9	6	12	4
		72.0	12	12	9	12	7	12	12	6	12	5	11	5	4	7	3	12	12	12	12	9	12	12	8	12	6	12	6	5	8	4
		110.0	12	12	6	12	4	10	5	4	7	3	9	3	3	5		12	12	8	12	5	12	5	5	8	4	10	4	4	6	3
		200.0	9	3	3	5		9	3	3	5		9	3	3	5		10	4	4	6	3	10	4	4	6	3	10	4	4	6	3
	* 3/8"Φ POWERS RAWL DROP-IN & 3/8"Φ STAINLESS STEEL BOLT WITH 1-9/16" MIN. EMBEDMENT (MIN. 3,000 P.S.I. CONCRETE)	48.0																12	12	12	12	16	12	12	12	12	16	12	12	12	12	12
		62.0																12	12	12	12	16	12	12	12	12	14	12	12	12	12	9
		72.0																12	12	12	12	16	12	12	12	12	12	12	12	10	12	8
		110.0																12	12	12	12	11	12	12	10	12	7	12	9	8	12	6
		200.0																12	9	8	12	6	12	9	8	12	6	12	9	8	12	6
	* 1/4"Φ POWERS FASTENING CALK-IN W/ 7/8" EMBED. & 1/4-20 STAINLESS STEEL MACHINE SCREW (MIN. 3,000 P.S.I. CONCRETE)	48.0	12	12	12	12	12	12	12	10	12	8	12	12	7	12	5	12	12	12	12	12	12	12	12	12	12	12	12	11	12	8
		62.0	12	12	11	12	9	12	12	8	12	6	12	10	5	12	4	12	12	12	12	12	12	12	12	12	9	12	12	9	12	6
		72.0	12	12	10	12	8	12	12	7	12	5	12	7	4	10	3	12	12	12	12	12	12	12	11	12	8	12	8	7	12	5
		110.0	12	12	6	12	5	12	6	4	9	3	12	4	3	7	3	12	12	10	12	8	12	8	7	11	5	12	5	6	8	4
		200.0	12	4	3	7	3	12	4	3	7	3	12	4	3	7	3	12	5	6	8	4	12	5	6	8	4	12	5	6	8	4
	1/4"Φ ELCO CRETE FLEX W/ 1-3/4" MIN. EMBEDMENT (MIN. 3,300 P.S.I. CONCRETE)	48.0	12	12	12	12	12	12	12	12	12	12	12	12	11	12	8	12	12	12	12	12	12	12	12	12	12	12	12	12	12	11
		62.0	12	12	12	12	12	12	12	12	12	9	12	12	9	12	6	12	12	12	12	12	12	12	12	12	12	12	12	11	12	8
		72.0	12	12	12	12	12	12	12	11	12	8	12	8	7	12	5	12	12	12	12	12	12	12	12	12	10	12	10	10	12	7
		110.0	12	12	11	12	8	12	8	7	11	5	12	5	6	8	4	12	12	12	12	10	12	9	10	12	7	12	7	8	10	6
		200.0	12	5	6	8	4	12	5	6	8	4	12	5	6	8	4	12	7	8	10	6	12	7	8	10	6	12	7	8	10	6
HOLLOW CONCRETE BLOCK	1/4"Φ ITW OR ELCO TAPCON W/ 1-1/4" MIN. EMBEDMENT	48.0	12	12	8	12	5	10	10	5	10	3	7	7	3	7		12	12	9	12	6	11	11	6	11	4	7	7	4	7	3
		62.0	11	11	6	11	4	8	8	4	8	3	5	3		4		12	12	7	12	5	9	9	5	9	3	6	3	3	5	
		72.0	10	10	5	10	3	7	7	3	7		4			3		11	11	6	11	4	7	7	4	7	3	5		3	3	
		110.0	6	6	3	6		4			3		3					7	7	4	7		5		3	3		4				
		200.0	3					3					3					4					4					4				
	* 1/4"Φ POWERS FASTENING CALK-IN W/ 7/8" EMBED & 1/4-20 STAINLESS STEEL MACHINE SCREW	48.0	12	12	8	12	6	12	12	6	12	4	9	9	4	9	3	12	12	12	12	9	12	12	9	12	6	11	11	6	11	4
		62.0	12	12	6	12	5	10	10	4	10	3	7	4	3	5		12	12	10	12	7	12	12	7	12	5	8	5	4	7	3
		72.0	12	12	5	12	4	9	9	4	9		6			4		12	12	9	12	6	11	11	6	11	4	7	3	4	5	
		110.0	8	8	3	8		5			3		5					10	10	5	10	4	7	3	4	4		6		3	3	
		200.0	5					5					5					6		3	3		6		3	3		6		3	3	
	1/4"Φ ELCO CRETE FLEX W/ 1-1/4" MIN. EMBEDMENT	48.0	12	12	12	12	11	12	12	11	12	7	12	12	7	12	5	12	12	12	12	11	12	12	11	12	8	12	12	7	12	5
		62.0	12	12	12	12	8	12	12	8	12	6	11	7	5	9	4	12	12	12	12	9	12	12	8	12	6	12	7	5	10	4
		72.0	12	12	10	12	7	12	12	7	12	5	9	4	4	6	3	12	12	10	12	7	12	12	7	12	5	10	5	5	7	3
		110.0	12	12	6	12	4	9	4	4	6	3	8	3	4	4		12	12	7	12	5	10	4	4	6	3	8	3	4	5	3
		200.0	8	3	4	4		8	3	4	4		8	3	4	4		8	3	4	5	3	8	3	4	5	3	8	3	4	5	3

ANCHOR SCHEDULE

FASTENER SPACING (INCHES) REQUIRED FOR VARIOUS DESIGN LOADS AND SPANS

EXISTING STRUCTURE	ANCHOR TYPE	LOAD (W) P.S.F. MAX. (SEE NOTE 1)	MIN. 3/4" EDGE DISTANCE														
			SPANS UP TO 6' - 0" (SEE NOTE 1)					SPANS UP TO 8' - 8" (SEE NOTE 1)					SPANS UP TO 12' - 10" (SEE NOTE 1)				
			CONNECTION TYPE (SEE NOTE 3)					CONNECTION TYPE (SEE NOTE 3)					CONNECTION TYPE (SEE NOTE 3)				
			C1	C2	C3	C4	C5	C1	C2	C3	C4	C5	C1	C2	C3	C4	C5
WOOD	T ≥ 1-3/4" 1/4"Φ WOOD LAG SCREW W/ MIN. 1-3/4" THREADED PENETRATION "T" SHEAR PARALLEL OR PERPENDICULAR TO WOOD GRAIN	48.0	12	12	10	12	8	12	12	7	12	6	12	12	4	12	4
		62.0	12	12	8	12	6	12	12	5	12	4	12	10	3	12	3
		72.0	12	12	7	12	5	12	12	4	12	4	12	6	3	9	
		110.0	12	12	4	12	3	12	6	3	9		11	4		7	
		200.0	11	4		7		11	4		7		11	4		7	
	* 7/16"Φ WOOD BUSHING W/ 7/8" MIN. EMBEDMENT STAINLESS STEEL STEEL MACHINE SCREW	48.0	12	12		12		12	12		12		10	10		10	
		62.0	12	12		12		12	12		12		8	5		6	
		72.0	12	12		12		10	10		10		7	3		4	
		110.0	9	9		9		6	3		4		5			3	
		200.0	5			3		5			3		5			3	

ANCHOR NOTES:

1. **SPANS AND LOADS SHOWN HERE ARE FOR DETERMINING ANCHOR SPACING ONLY. ALLOWABLE STORM SHUTTER SPANS FOR SPECIFIC LOADS MUST BE LIMITED TO THOSE SHOWN IN TABLE 1, SHEET 6.**
2. ENTER ANCHOR SCHEDULE BASED ON THE EXISTING STRUCTURE MATERIAL, ANCHOR TYPE AND EDGE DISTANCE. SELECT DESIGN LOAD GREATER THAN OR EQUAL TO NEGATIVE DESIGN LOAD ON SHUTTER AND SELECT SPAN GREATER THAN OR EQUAL TO SHUTTER SPAN.
3. SEE MOUNTING SECTION DETAILS FOR IDENTIFICATION OF CONNECTION TYPE.
4. EXISTING STRUCTURE MAY BE CONCRETE, HOLLOW BLOCK OR WOOD FRAMING. REFERENCE ANCHOR SCHEDULE FOR PROPER ANCHOR TYPE BASED ON TYPE OF EXISTING STRUCTURE AND APPROPRIATE CONNECTION TYPE. SEE CONNECTION DETAILS FOR IDENTIFICATION OF CONNECTION TYPE.
5. ANCHORS SHALL BE INSTALLED IN ACCORDANCE WITH MANUFACTURERS' RECOMMENDATIONS. EMBEDMENT LENGTHS SHALL BE AS NOTED AND DO NOT INCLUDE STUCCO OR OTHER FINISHES.
6. WHERE EXISTING STRUCTURE IS WOOD FRAMING, WOOD FRAMING CONDITIONS VARY. FIELD VERIFY THAT FASTENERS ARE INTO ADEQUATE WOOD FRAMING MEMBERS, NOT PLYWOOD. FASTENING TO PLYWOOD IS ACCEPTABLE ONLY FOR SIDE CLOSURE PIECES.
7. WHERE LAG SCREWS FASTEN TO NARROW FACE OF STUD FRAMING, FASTENER SHALL BE LOCATED IN CENTER OF NOMINAL 2" x 4" (MIN.) WOOD STUD. 3/4" EDGE DISTANCE IS ACCEPTABLE FOR WOOD FRAMING. WOOD STUD SHALL BE "SOUTHERN PINE" G=0.55 OR GREATER DENSITY. LAG SCREWS SHALL HAVE PHILLIPS PAN HEAD OR HEX HEAD.
8. MACHINE SCREWS SHALL HAVE MINIMUM OF 1/2" ENGAGEMENT OF THREADS IN BASE ANCHOR AND MAY HAVE EITHER A PAN HEAD, TRUSS HEAD, OR WAFER HEAD (SIDEWALK BOLT), U.O.N.
9. DESIGNATES ANCHOR CONDITIONS WHICH ARE NOT ACCEPTABLE USES.
10. * DESIGNATES ANCHORS WHICH ARE REMOVABLE BY REMOVING MACHINE SCREW, NUT OR WASHERED WINGNUT.

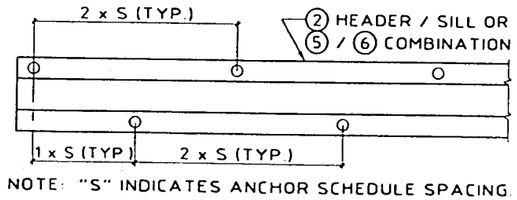

NOTE: "S" INDICATES ANCHOR SCHEDULE SPACING.

SPACING DIAGRAM FOR:

- C1 CONNECTION TYPE USING PIECE ②
- C3 CONNECTION TYPE USING PIECE ⑥ WITH OUTSIDE ANCHORS
- APPLICABLE TO 6.8 SYSTEM ONLY

PRODUCT REVISED
as complying with the Florida Buiding Code
Acceptance No 02-0419.03
Expiration Date 04/03/06
By
Miami Dade Product Control Division

KNEZEVICH & ASSOCIATES, INC.
CONSULTING ENGINEERS • PRODUCT TESTING
1260 N. UNIVERSITY DRIVE, SUITE 180 • FORT LAUDERDALE, FL 33322
TEL: (954) 382-2800 • FAX: (954) 382-2989 • FLORIDA COA #3205
WEBSITE: WWW.KNEZEVICH.COM • E-MAIL: KA@KNEZEVICH.COM

COPYRIGHT © 2001 KNEZEVICH & ASSOCIATES, INC

6.8 SYSTEM LICENSED BY SOUTHERN SHUTTER ASSOCIATION

6.8 - HR
ACCORDION SHUTTER

Signature Storm Protection, Inc.
Installation & Service
1801 N.W. 187 AVENUE BOCA RATON, FL 33432
TEL: (561) 391-5191 FAX: (561) 391-1023

V.J. KNEZEVICH
PROFESSIONAL ENGINEER
FL License No: PE 0010983

FEB 22 2001

revisions			
no	date	by	description
1	03/19/99	VJK	COUNTY COMMENTS
2	04/13/00	VJK	GENERAL REVISIONS
3	06/22/00	VJK	ADD HR ACCORDION SYS.
4	12/27/00	VJK	COUNTY COMMENTS
5	02/05/01	AS	GENERAL REVISIONS
6	02/08/01	AS	COUNTY COMMENTS

SSA I.D.# 02210198254D

date 12/08/98
scale AS NOTED
drawn by MC
design by VJK
checked by VJK
drawing no 01-850
sheet 5 of 11

6.8 ACCORDION SHUTTER
NOT APPLICABLE TO HR ACCORDION SHUTTER

TABLE 2 — MINIMUM SHUTTER SEPARATION FROM GLASS

POSITIVE DESIGN LOAD (W) (P.S.F.)	ACTUAL SHUTTER SPAN (L) (FT - IN)	MIN. SEPARATION FROM GLASS FOR INSTALLATIONS LESS THAN OR EQUAL TO 30' ABOVE GRADE (IN.)	MIN. SEPARATION FROM GLASS FOR INSTALLATIONS GREATER THAN 30' ABOVE GRADE (IN.)
40.0	8-3	3-1/8	1-5/8
	10-0	3-3/4	2-1/8
	11-11	3-3/4	3
50.0	8-3	3-1/8	1-3/4
	10-0	3-3/4	2-3/8
	11-3	3-3/4	3
60.0	5-0	3-1/8	1-1/4
	8-3	3-1/8	1-7/8
	10-9	3-3/4	3
70.0	5-0	3-1/8	1-1/8
	8-3	3-1/8	1-7/8
	10-4	3-3/4	3
80.0	6-0	3-1/8	1-3/8
	8-3	3-1/8	2-1/8
	9-4	3-3/4	2-5/8
90.0	5-0	3-1/8	1-3/8
	7-0	3-1/8	1-5/8
	8-3	3-1/8	2-1/8
100.0	5-0	3-1/8	1-3/8
	7-0	3-1/8	1-3/4
	8-3	3-1/8	2-1/4
110.0	5-0	3-1/8	1-3/8
	7-0	3-1/8	1-7/8
	8-3	3-1/8	2-3/8
120.0	5-0	3-1/8	1-3/8
	7-0	3-1/8	1-7/8
	8-3	3-1/8	2-1/4
130.0	5-0	3-1/8	1-3/8
	7-0	3-1/8	1-7/8
	8-3	3-1/8	2-1/2

TABLE 1 NOTES:

1. DETERMINE BOTH THE POSITIVE AND THE NEGATIVE WIND LOADS. CHECK THEIR RESPECTIVE SPANS AND USE THE LESSER VALUE OF THE TWO.
2. FOR DESIGN LOADS BETWEEN TABULATED VALUES USE NEXT HIGHER LOAD OR LINEAR INTERPOLATION MAY BE USED TO DETERMINE ALLOWABLE SPANS.

TABLE 2 NOTE:

1. ENTER TABLE 2 WITH POSITIVE DESIGN LOAD TO DETERMINE MIN. STORM SHUTTER SEPARATION FROM GLASS.

TABLE 1 — ACCORDION SHUTTER SPAN SCHEDULE FOR ALL MOUNTING CONDITIONS

DESIGN WIND LOAD W (P.S.F.)	POSITIVE WIND LOAD	NEGATIVE WIND LOAD
	L max (FT - IN)	L max. (FT - IN)
30.0	12-10	12-10
35.0	12-4	12-10
40.0	11-11	12-10
45.0	11-7	12-10
50.0	11-3	12-10
55.0	11-0	12-10
60.0	10-9	12-4
65.0	10-6	11-6
70.0	10-4	10-8
72.0	10-3	10-4
75.0	10-2	9-11
80.0	9-11	9-4
90.0	9-7	8-4
100.0	9-3	8-3
110.0	9-0	8-3
120.0	8-8	8-3
130.0	8-4	8-3
133.0	8-3	8-3
140.0	7-11	7-11
150.0	7-5	7-5
160.0	6-11	6-11
170.0	6-6	6-6
180.0	6-2	6-2
190.0	5-10	5-10
200.0	5-6	5-6

PRODUCT REVISED
as complying with the Florida Buiding Code
Acceptance No 02-0419.03
Expiration Date 09/03/06
By
Miami Dade Product Control Division

APPROVED AS COMPLYING WITH THE SOUTH FLORIDA BUILDING CODE
DATE 04/03/2001
BY
PRODUCT CONTROL DIVISION
BUILDING CODE COMPLIANCE OFFICE
ACCEPTANCE NO. 01-0301.03

KNEZEVICH & ASSOCIATES, INC.
CONSULTING ENGINEERS • PRODUCT TESTING
1260 N. UNIVERSITY DRIVE, SUITE 180 • FORT LAUDERDALE, FL 33322
TEL: (954) 382-2800 • FAX: (954) 382-2989 • FLORIDA COA #3205
WEBSITE: WWW.KNEZEVICH.COM • E-MAIL: KA@KNEZEVICH.COM
COPYRIGHT © 2001 KNEZEVICH & ASSOCIATES, INC.
6.8 SYSTEM LICENSED BY SOUTHERN SHUTTER ASSOCIATION

6.8 – HR
ACCORDION SHUTTER

Signature Storm Protection, Inc.
Installation & Service
1801 N.W. 1ST AVENUE
BOCA RATON, FL 33432
TEL: (561) 391-5191
FAX: (561) 391-1023

V.J. KNEZEVICH
PROFESSIONAL ENGINEER
Fl. License No:
FE 0010983

FEB 22 2001

revisions

no	date	by	description
1	03/19/99	VJK	COUNTY COMMENTS
2	04/13/00	JWK	GENERAL REVISIONS
3	06/22/00	VJK	ADD HR ACCORDION SYSTEM
4	12/27/00	VJK	COUNTY COMMENTS
5	02/05/01	AS	GENERAL REVISIONS
6	02/08/01	AS	COUNTY COMMENTS

SSA I.D.# 0221019825 4D

date 12/08/98
scale AS NOTED
drawn by MC
design by VJK
checked by VJK
drawing no 01-850
sheet 6 of 11

HR ACCORDION SHUTTER

NOT APPLICABLE TO 6.8 ACCORDION SHUTTER

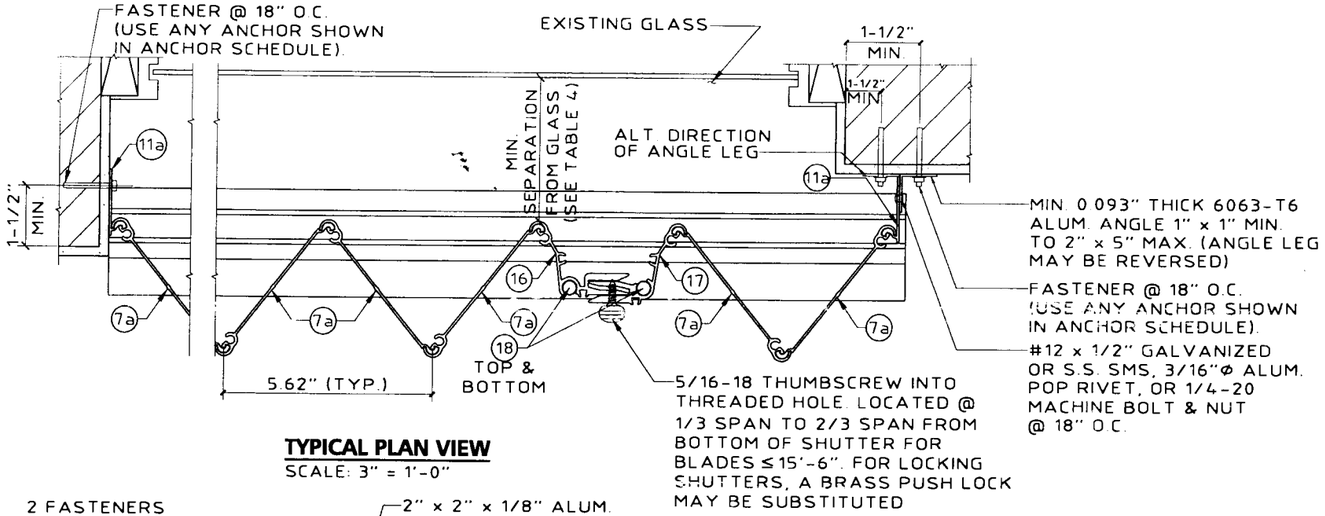

TYPICAL PLAN VIEW

SCALE: 3" = 1'-0"

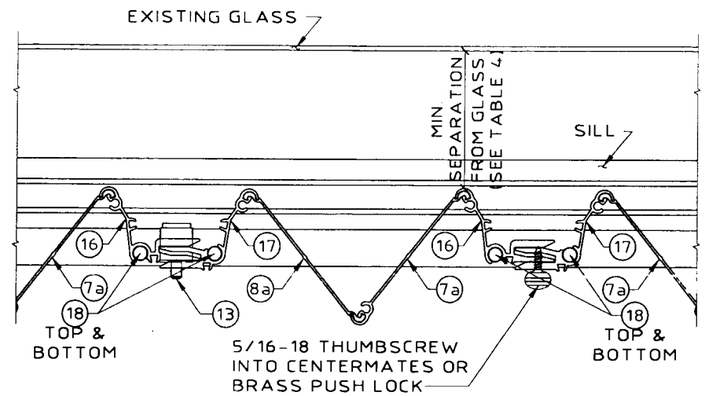

MULTIPLE SHUTTER ASSEMBLY

SCALE: 3" = 1'-0"

NOTE:
STARTER (11a) LOCATION MUST BE ADJUSTED TO INSURE FULL DEPLOYMENT OF SHUTTER AND COMPLETE INTERLOCKING OF ADJACENT BLADES.

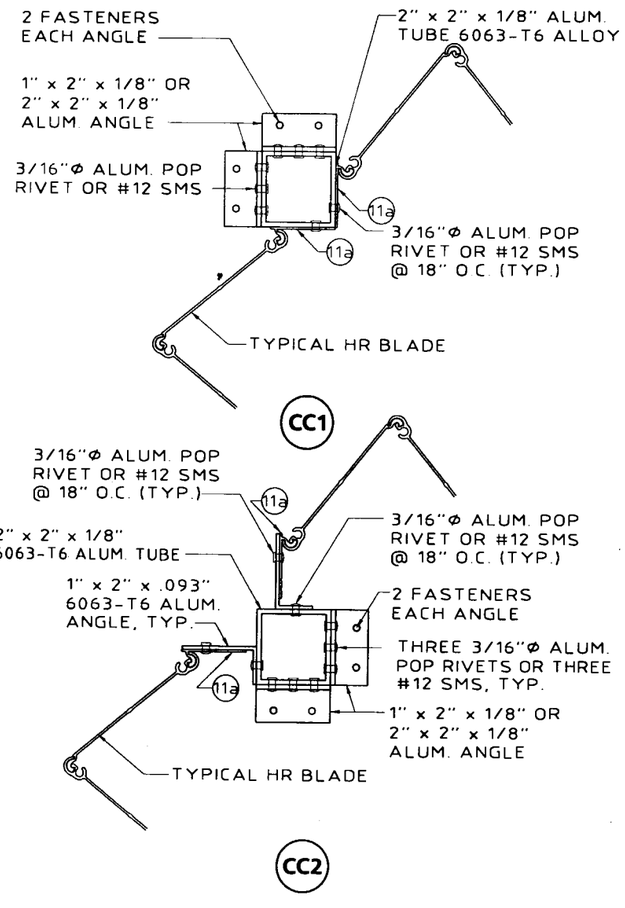

TYPICAL CORNER CLOSURE DETAILS

SCALE: 3" = 1'-0"

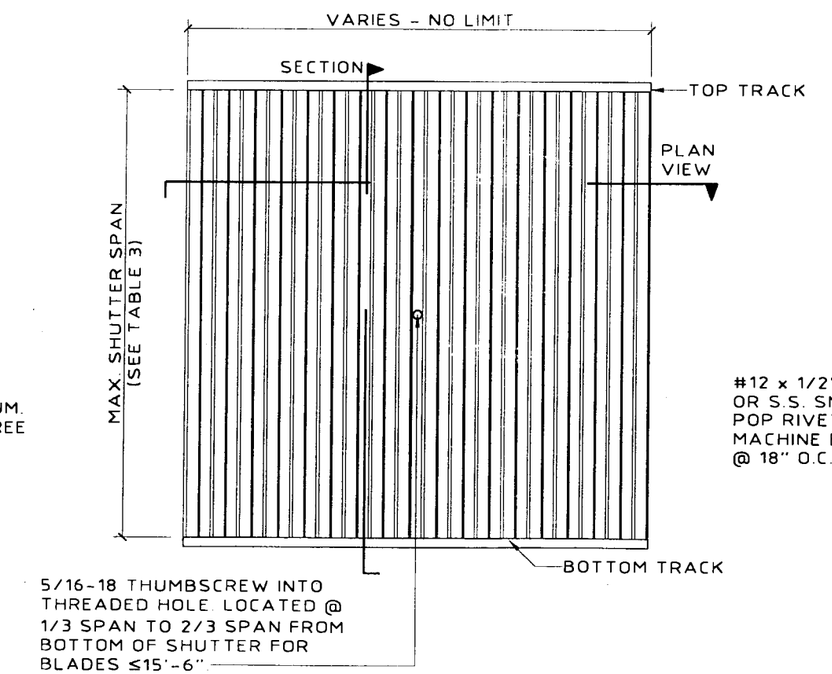

TYPICAL ELEVATION

N.T.S.

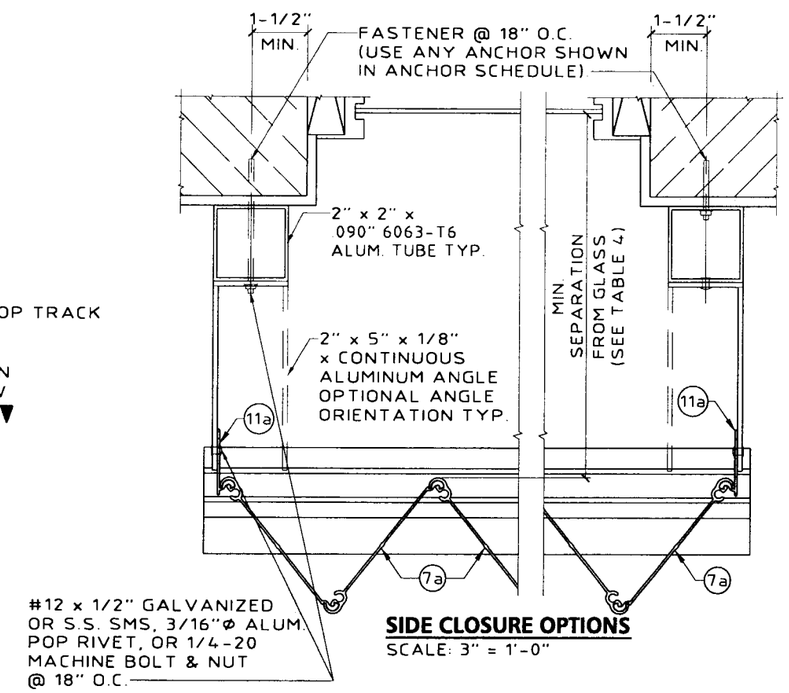

SIDE CLOSURE OPTIONS

SCALE: 3" = 1'-0"

PRODUCT REVISED
as complying with the Florida Buiding Code
Acceptance No. 02-0419.03
Expiration Date 04/03/06
By
Miami Dade Product Control Division

APPROVED AS COMPLYING WITH THE SOUTH FLORIDA BUILDING CODE
DATE 04/03/2001
BY
PRODUCT CONTROL DIVISION
BUILDING CODE COMPLIANCE OFFICE
ACCEPTANCE NO. 01-0301.03

KNEZEVICH & ASSOCIATES, INC.
CONSULTING ENGINEERS • PRODUCT TESTING
1260 N. UNIVERSITY DRIVE, SUITE 180 • FORT LAUDERDALE, FL 33322
TEL: (954) 382-2800 • FAX: (954) 382-2989 • FLORIDA COA #3205
WEBSITE: WWW.KNEZEVICH.COM • E-MAIL: KA@KNEZEVICH.COM

COPYRIGHT © 2001 KNEZEVICH & ASSOCIATES, INC.

6.8 SYSTEM LICENSED BY SOUTHERN SHUTTER ASSOCIATION

6.8 – HR ACCORDION SHUTTER

Signature Storm Protection, Inc.
Installation & Service
1801 N.W. 1ST AVENUE BOCA RATON, FL 33432
TEL: (561) 391-5193 FAX: (561) 391-1023

V.J. KNEZEVICH
PROFESSIONAL ENGINEER
FL License No: PE 0010983

FEB 22 2001

revisions

no	date	by	description
1	03/19/99	VJK	COUNTY COMMENTS
2	06/19/00	JWK	GENERAL REVISIONS
3	06/22/00	VJK	ADD HR ACCORDION SYSTEM
4	12/27/00	VJK	COUNTY COMMENTS
5	02/05/01	AS	GENERAL REVISIONS
6	02/08/01	AS	COUNTY COMMENTS

SSA I.D.# 022010198254D

date 12/08/98	
scale AS NOTED	drawn by MC
design by VJK	checked by VJK
drawing no 01-850	
sheet 7 of 11	

HR ACCORDION SHUTTER

NOT APPLICABLE TO 6.8 ACCORDION SHUTTER

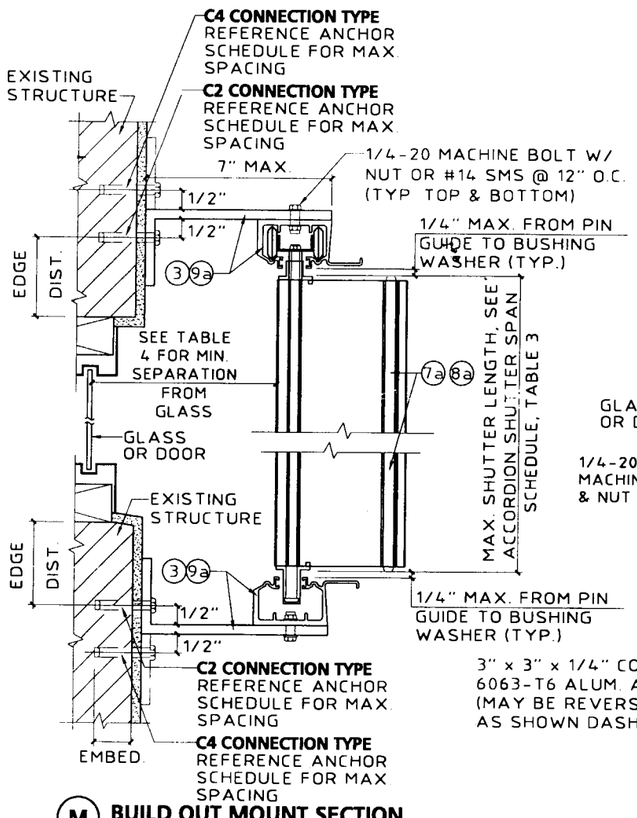

M BUILD OUT MOUNT SECTION
SCALE : 3"= 1'- 0"

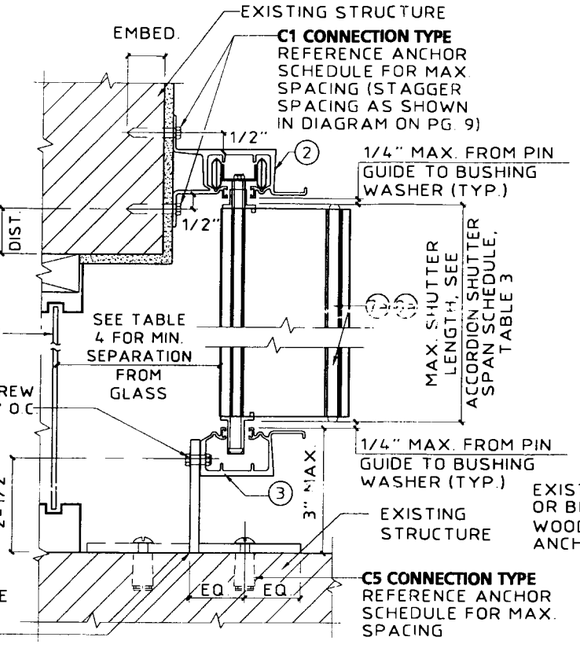

N WALL MOUNT SECTION
SCALE : 3"= 1'- 0"

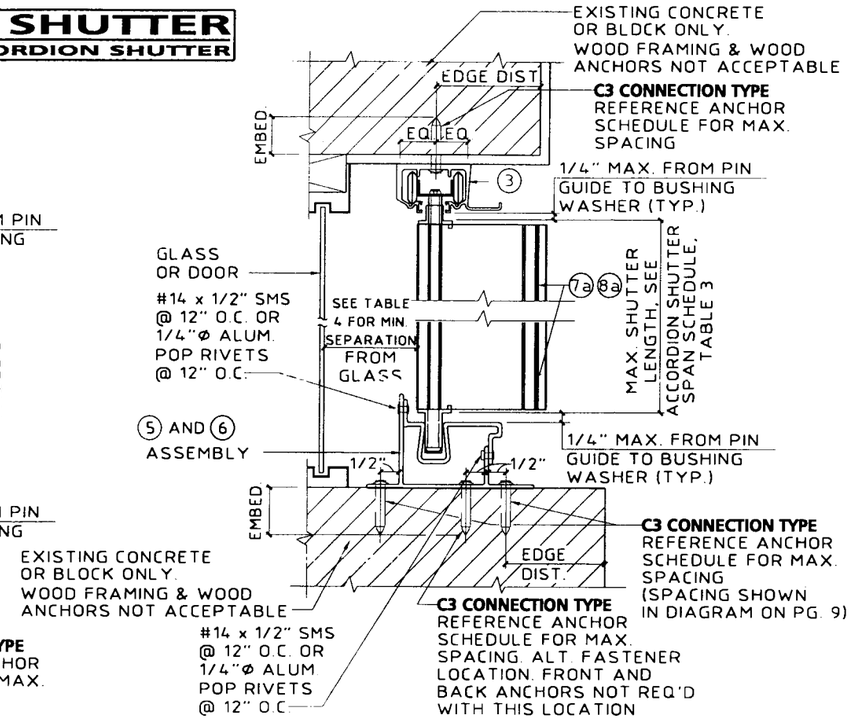

P CEILING / INSIDE MOUNT SECTION
SCALE : 3"= 1'- 0"

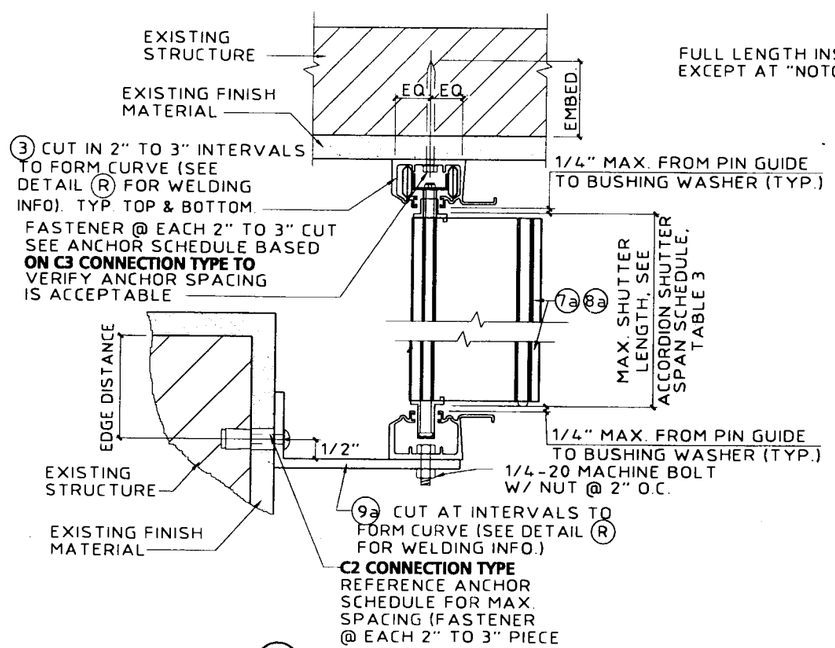

Q CURVED TRACK DETAIL
SCALE : 3"= 1'- 0"

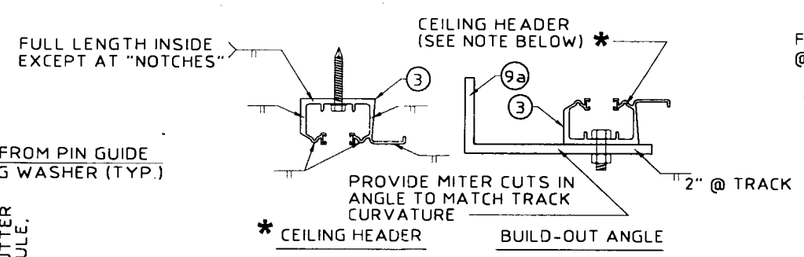

*NOTE: WHEN CEILING HEADER IS USED IN A BOTTOM MOUNTING CONDITION, WELDING LOCATIONS ARE THE SAME.
(USE ER4093 FILLER ALLOY FOR ALL WELDING.)

R WELDING DETAILS
SCALE : 3"= 1'- 0"

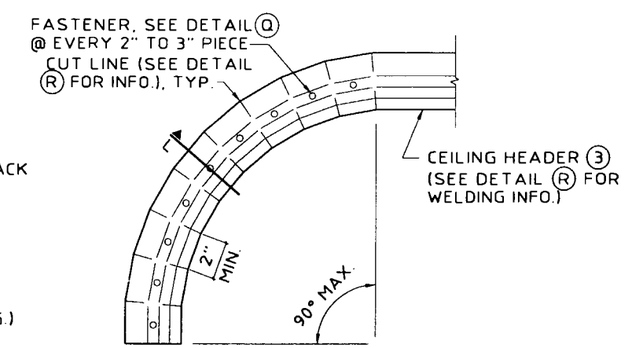

CURVED TRACK PLAN VIEW
N.T.S.

PRODUCT REVISED
as complying with the Florida Buiding Code
Acceptance No. 02-0419.03
Expiration Date 04/03/06
By
Miami Dade Product Control Division

APPROVED AS COMPLYING WITH THE SOUTH FLORIDA BUILDING CODE
DATE 04/03/2001
BY
PRODUCT CONTROL DIVISION
BUILDING CODE COMPLIANCE OFFICE
ACCEPTANCE NO. 01-0301.03

KNEZEVICH & ASSOCIATES, INC.
CONSULTING ENGINEERS • PRODUCT TESTING
1260 N. UNIVERSITY DRIVE, SUITE 180 • FORT LAUDERDALE, FL 33322
TEL: (954) 382-2800 • FAX: (954) 382-2989 • FLORIDA COA #3205
WEBSITE: WWW.KNEZEVICH.COM • E-MAIL: KA@KNEZEVICH.COM

COPYRIGHT © 2001 KNEZEVICH & ASSOCIATES, INC

6.8 SYSTEM LICENSED BY SOUTHERN SHUTTER ASSOCIATION

6.8 — HR
ACCORDION SHUTTER

Signature Storm Protection, Inc.
Installation & Service
1801 N.W. 1ST AVENUE
BOCA RATON, FL 33432
TEL: (561) 391-5191
FAX: (561) 391-1023

V. I. KNEZEVICH
PROFESSIONAL ENGINEER
Fl. License No:
PE 0010983

FEB 22 2001

revisions			
no	date	by	description
1	03/19/99	VJK	COUNTY COMMENTS
2	06/13/00	VJK	GENERAL REVISIONS
3	06/22/00	VJK	ADD HR ACCORDION SYSTEM
4	12/27/00	VJK	COUNTY COMMENTS
5	02/05/01	AS	GENERAL REVISIONS
6	02/08/01	AS	COUNTY COMMENTS

SSA I.D.# 02210198254D

date 12/08/98	
scale AS NOTED	drawn by MC
design by VJK	checked by VJK
drawing no. 01-850	
sheet 8 of 11	

02/21/01 15:15

HR ACCORDION SHUTTER

NOT APPLICABLE TO 6.8 ACCORDION SHUTTER

ANCHOR SCHEDULE

FASTENER SPACING (INCHES) REQUIRED FOR VARIOUS DESIGN LOADS AND SPANS

EXISTING STRUCTURE	ANCHOR TYPE	LOAD (W) P.S.F. MAX. (SEE NOTE 1)	MIN. 2" EDGE DISTANCE																			
			SPANS UP TO 6' - 0" (SEE NOTE 1)					SPANS UP TO 8' - 8" (SEE NOTE 1)					SPANS UP TO 10' - 2" (SEE NOTE 1)					SPANS UP TO 15' - 6" (SEE NOTE 1)				
			CONNECTION TYPE (SEE NOTE 3)					CONNECTION TYPE (SEE NOTE 3)					CONNECTION TYPE (SEE NOTE 3)					CONNECTION TYPE (SEE NOTE 3)				
			C1	C2	C3	C4	C5	C1	C2	C3	C4	C5	C1	C2	C3	C4	C5	C1	C2	C3	C4	C5
CONCRETE	1/4"Φ ITW OR ELCO TAPCON W/ 1-3/4" MIN. EMBEDMENT (MIN. 3,000 P.S.I. CONCRETE)	75.0	9	12	12	12	9	9	12	9	12	6	9	12	7	12	5	9	10	5	10	3
		90.0	9	12	10	12	8	9	12	7	12	5	9	12	6	12	4	9	8	4	8	3
		140.0	9	12	7	12	5	9	10	4	10	3	9	8	4	8	3	9	7	3	7	
		180.0	9	11	5	11	4	9	7	3	7		9	7	3	7		9	7	3	7	
		230.0	9	8	4	8	3	9	7	3	7		9	7	3	7		9	7	3	7	
	* 1/4"Φ POWERS FASTENING CALK-IN W/ 7/8" EMBED. & 1/4-20 STAINLESS STEEL MACHINE SCREW (MIN. 3,000 P.S.I. CONCRETE)	75.0	9	12	10	12	8	9	12	7	12	5	9	12	6	12	4	9	11	3	11	3
		90.0	9	12	8	12	6	9	12	5	12	4	9	12	5	12	4	9	9	3	9	
		140.0	9	12	5	12	4	9	11	3	11	3	9	9	3	9		9	8		8	
		180.0	9	12	4	12	3	9	8		8		9	8		8		9	8		8	
		230.0	9	9	3	9		9	8		8		9	8		8		9	8		8	
	1/4"Φ ELCO CRETE FLEX W/ 2" MIN. EMBEDMENT (MIN. 3,300 P.S.I. CONCRETE)	75.0	9	12	12	12	12	9	12	12	12	10	9	12	11	12	9	9	12	7	12	5
		90.0	9	12	12	12	12	9	12	11	12	8	9	12	9	12	7	9	12	6	12	4
		140.0	9	12	10	12	8	9	12	7	12	5	9	12	6	12	4	9	12	5	12	4
		180.0	9	12	8	12	6	9	12	5	12	4	9	12	5	12	4	9	12	5	12	4
		230.0	9	12	6	12	5	9	12	5	12	4	9	12	5	12	4	9	12	5	12	4
HOLLOW CONCRETE BLOCK	1/4"Φ ITW TAPCON W/ 1-1/4" MIN. EMBEDMENT	75.0	9	10	6	10	4	9	7	4	7	3	7	6	3	6		5	3		3	
		90.0	9	8	5	8	3	7	5	3	5		6	5	3	5		4	3		3	
		140.0	7	5	3	5		4	3		3		4	3		3		3				
		180.0	5	4		4		3					3					3				
		230.0	4	3		3		3					3					3				
	* 1/4"Φ POWERS FASTENING CALK-IN W/ 7/8" EMBED. & 1/4-20 STAINLESS STEEL MACHINE SCREW	75.0	9	12	6	12	4	9	8	4	8	3	9	7	3	7		6	4		4	
		90.0	9	10	5	10	3	9	7	3	7		7	6	3	6		5	4		4	
		140.0	8	6	3	6		6	4		4		5	3		3		4	3		3	
		180.0	6	5		5		4	3		3		4	3		3		4	3		3	
		230.0	5	4		4		4	3		3		4	3		3		4	3		3	
	1/4"Φ ELCO CRETE FLEX W/ 1-1/4" MIN. EMBEDMENT	75.0	9	12	9	12	7	9	12	6	12	5	9	12	5	12	4	9	8	3	8	
		90.0	9	12	7	12	6	9	12	5	12	4	9	10	4	10	3	8	6	3	6	
		140.0	9	11	5	11	3	9	7	3	7		8	6	3	6		7	5		5	
		180.0	9	8	3	8	3	7	6		6		7	5		5		7	5		5	
		230.0	8	6	3	6		7	5		5		7	5		5		7	5		5	
	1/4"Φ ELCO TAPCON W/ 1-1/4" MIN. EMBEDMENT	75.0	12	12	8	12	6	12	9	6	9	4	10	8	5	8	3	6	5	3	5	
		90.0	12	11	7	11	5	10	7	5	7	3	8	6	4	6	3	5	4		4	
		140.0	9	7	4	7	3	6	5	3	5		5	4		4		4	3		3	
		180.0	7	5	3	5		5	3		3		4	3		3		4	3		3	
		230.0	5	4		4		4	3		3		4	3		3		4	3		3	

PRODUCT REVISED
as complying with the Florida Buiding Code
Acceptance No 02-0419.03
Expiration Date 04/03/06
By
Miami Dade Product Control Division

APPROVED AS COMPLYING WITH THE SOUTH FLORIDA BUILDING CODE
DATE 04/03/2001
BY Helmy H. Hakim
PRODUCT CONTROL DIVISION
BUILDING CODE COMPLIANCE OFFICE
ACCEPTANCE NO 01-0301.03

ANCHOR SCHEDULE

FASTENER SPACING (INCHES) REQUIRED FOR VARIOUS DESIGN LOADS AND SPANS

EXISTING STRUCTURE	ANCHOR TYPE	LOAD (W) P.S.F. MAX (SEE NOTE 1)	MIN. 3/4" EDGE DISTANCE																			
			SPANS UP TO 6' - 0" (SEE NOTE 1)					SPANS UP TO 8' - 8" (SEE NOTE 1)					SPANS UP TO 15' - 6" (SEE NOTE 1)									
			CONNECTION TYPE (SEE NOTE 3)					CONNECTION TYPE (SEE NOTE 3)					CONNECTION TYPE (SEE NOTE 3)									
			C1	C2	C3	C4	C5	C1	C2	C3	C4	C5	C1	C2	C3	C4	C5					
WOOD	T≥1-27/32" 1/4"Φ WOOD LAG SCREW W/ MIN. 1-27/32" THREADED PENETRATION "T" SHEAR PARALLEL OR PERPENDICULAR TO WOOD GRAIN	75.0	9	12	8	12	6	9	12	5	12	4	9	12	3	12						
		90.0	9	12	6	12	5	9	12	4	12	4	9	11		11						
		140.0	9	12	4	12	3	9	12	3	12		9	9		9						
		180.0	9	12	3	12		9	9		9		9	9		9						
		230.0	9	11		11		9	9		9		9	9		9						
	* 7/16"Φ WOOD BUSHING W/ 7/8" MIN. EMBEDMENT STAINLESS STEEL STEEL MACHINE SCREW	75.0	9	12		12		9	8		8		6	4								
		90.0	9	10		10		9	7		7		5	3								
		140.0	8	6		6		5	4		4		4	3								
		180.0	6	5		5		4	3		3		4	3								
		230.0	5	4		4		4	3		3		4	3								

ANCHOR NOTES:

1. **SPANS AND LOADS SHOWN HERE ARE FOR DETERMINING ANCHOR SPACING ONLY. ALLOWABLE STORM SHUTTER SPANS FOR SPECIFIC LOADS MUST BE LIMITED TO THOSE SHOWN IN TABLE 3, SHEET 11.**
2. ENTER ANCHOR SCHEDULE BASED ON THE EXISTING STRUCTURE MATERIAL, ANCHOR TYPE AND EDGE DISTANCE. SELECT DESIGN LOAD GREATER THAN OR EQUAL TO NEGATIVE DESIGN LOAD ON SHUTTER AND SELECT SPAN GREATER THAN OR EQUAL TO SHUTTER SPAN.
3. SEE MOUNTING SECTION DETAILS FOR IDENTIFICATION OF CONNECTION TYPE.
4. EXISTING STRUCTURE MAY BE CONCRETE, HOLLOW BLOCK OR WOOD FRAMING. REFERENCE ANCHOR SCHEDULE FOR PROPER ANCHOR TYPE BASED ON TYPE OF EXISTING STRUCTURE AND APPROPRIATE CONNECTION TYPE. SEE CONNECTION DETAILS FOR IDENTIFICATION OF CONNECTION TYPE.
5. ANCHORS SHALL BE INSTALLED IN ACCORDANCE WITH MANUFACTURERS' RECOMMENDATIONS. EMBEDMENT LENGTHS SHALL BE AS NOTED AND DO NOT INCLUDE STUCCO OR OTHER FINISHES.
6. WHERE EXISTING STRUCTURE IS WOOD FRAMING, WOOD FRAMING CONDITIONS VARY. FIELD VERIFY THAT FASTENERS ARE INTO ADEQUATE WOOD FRAMING MEMBERS, NOT PLYWOOD. FASTENING TO PLYWOOD IS ACCEPTABLE ONLY FOR SIDE CLOSURE PIECES.
7. WHERE LAG SCREWS FASTEN TO NARROW FACE OF STUD FRAMING, FASTENER SHALL BE LOCATED IN CENTER OF NOMINAL 2" x 4" (MIN.) WOOD STUD. 3/4" EDGE DISTANCE IS ACCEPTABLE FOR WOOD FRAMING. WOOD STUD SHALL BE "SOUTHERN PINE" G=0.55 OR GREATER DENSITY. LAG SCREWS SHALL HAVE PHILLIPS PAN HEAD OR HEX HEAD.
8. MACHINE SCREWS SHALL HAVE MINIMUM OF 1/2" ENGAGEMENT OF THREADS IN BASE ANCHOR AND MAY HAVE EITHER A PAN HEAD, TRUSS HEAD, OR WAFER HEAD (SIDEWALK BOLT), U.O.N.
9. ▨ DESIGNATES ANCHOR CONDITIONS WHICH ARE NOT ACCEPTABLE USES.
10. * DESIGNATES ANCHORS WHICH ARE REMOVABLE BY REMOVING MACHINE SCREW, NUT OR WASHERED WINGNUT.

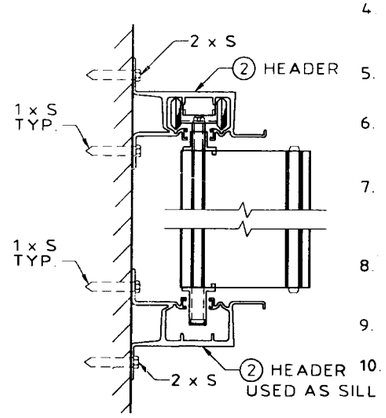

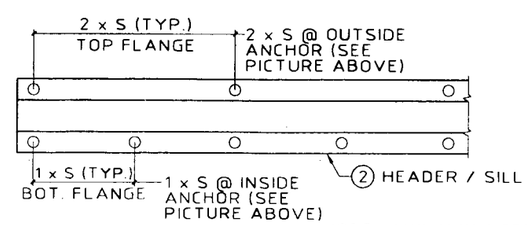

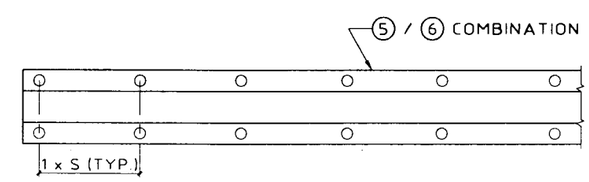

NOTE: "S" INDICATES ANCHOR SCHEDULE SPACING.

SPACING DIAGRAM FOR C1 CONNECTION TYPE:

- C1 CONNECTION TYPE USING PIECE ②
- APPLICABLE TO HR SYSTEM ONLY

SPACING DIAGRAM FOR C3 CONNECTION TYPE:

- C3 CONNECTION TYPE USING PIECE ⑥ WITH OUTSIDE ANCHORS ONLY
- APPLICABLE TO HR SYSTEM ONLY

KNEZEVICH & ASSOCIATES, INC.
CONSULTING ENGINEERS • PRODUCT TESTING
1260 N. UNIVERSITY DRIVE, SUITE 180 • FORT LAUDERDALE, FL 33322
TEL: (954) 382-2800 • FAX: (954) 382-2989 • FLORIDA COA #3205
WEBSITE: WWW.KNEZEVICH.COM • E-MAIL: KA@KNEZEVICH.COM

COPYRIGHT © 2001 KNEZEVICH & ASSOCIATES, INC.

6.8 SYSTEM LICENSED BY SOUTHERN SHUTTER ASSOCIATION

6.8 - HR ACCORDION SHUTTER

Signature Storm Protection, Inc.
Installation & Service
1801 N.W. 1ST AVENUE
BOCA RATON, FL 33432
TEL: (561) 391-5191
FAX: (561) 391-1023

V. J. KNEZEVICH
PROFESSIONAL ENGINEER
FL License No: PE 0010983

FEB 22 2001

revisions			
no	date	by	description
1	03/19/99	VJK	COUNTY COMMENTS
2	04/13/00	JWK	GENERAL REVISIONS
3	06/22/00	VJK	ADD HR ACCORDION SYSTEM
4	12/27/00	VJK	COUNTY COMMENTS
5	02/05/01	AS	GENERAL REVISIONS
6	02/08/01	AS	COUNTY COMMENTS

SSA I.D.# 02210198254D

date 12/08/98
scale AS NOTED
drawn by MC
design by VJK
checked by VJK
drawing no 01-850
sheet 9 of 11

HR ACCORDION SHUTTER

NOT APPLICABLE TO 6.8 ACCORDION SHUTTER

ANCHOR SCHEDULE

FASTENER SPACING (INCHES) REQUIRED FOR VARIOUS DESIGN LOADS AND SPANS

MIN. 3" EDGE DISTANCE

EXISTING STRUCTURE	ANCHOR TYPE	LOAD (W) P.S.F. MAX. (SEE NOTE 1)	SPANS UP TO 6' - 0" (SEE NOTE 1) CONNECTION TYPE (SEE NOTE 3)					SPANS UP TO 8' - 8" (SEE NOTE 1) CONNECTION TYPE (SEE NOTE 3)					SPANS UP TO 10' - 2" (SEE NOTE 1) CONNECTION TYPE (SEE NOTE 3)					SPANS UP TO 15' - 6" (SEE NOTE 1) CONNECTION TYPE (SEE NOTE 3)				
			C1	C2	C3	C4	C5	C1	C2	C3	C4	C5	C1	C2	C3	C4	C5	C1	C2	C3	C4	C5
CONCRETE	1/4"ø ITW OR ELCO TAPCON W/ 1-3/4" MIN. EMBEDMENT (MIN. 3,000 P.S.I. CONCRETE)	75.0	9	12	12	12	11	9	12	10	12	7	9	12	9	12	6	9	11	5	6	3
		90.0	9	12	12	12	9	9	12	8	12	6	9	12	7	12	5	9	9	4	4	3
		140.0	9	12	8	12	6	9	11	5	11	4	9	9	4	9	3	9	8	3	3	▨
		180.0	9	12	6	12	4	9	8	4	8	3	9	8	4	8	3	9	8	3	3	▨
		230.0	9	9	4	9	3	9	8	4	8	3	9	8	4	8	3	9	8	3	3	▨
	* 3/8"ø POWERS RAWL DROP-IN & 3/8"ø STAINLESS STEEL BOLT WITH 1-9/16" MIN. EMBEDMENT (MIN. 3,000 P.S.I. CONCRETE)	75.0	9	12	12	12	16	9	12	12	12	12	9	12	12	12	10	9	12	8	12	7
		90.0	9	12	12	12	15	9	12	12	12	10	9	12	11	12	9	9	12	7	12	5
		140.0	9	12	12	12	9	9	12	8	12	6	9	12	7	12	5	9	12	6	12	4
		180.0	9	12	9	12	7	9	12	6	12	5	9	12	6	12	4	9	12	6	12	4
		230.0	9	12	7	12	5	9	12	6	12	4	9	12	6	12	4	9	12	6	12	4
	* 1/4"ø POWERS FASTENING CALK-IN W/ 7/8" EMBED. & 1/4-20 STAINLESS STEEL MACHINE SCREW (MIN. 3,000 P.S.I. CONCRETE)	75.0	9	12	12	12	12	9	12	11	12	9	9	12	10	12	7	9	12	6	8	4
		90.0	9	12	12	12	10	9	12	9	12	7	9	12	8	12	6	9	12	5	6	3
		140.0	9	12	9	12	7	9	12	6	12	4	9	11	5	11	4	9	10	4	4	3
		180.0	9	12	7	12	5	9	10	4	10	3	9	10	4	10	3	9	10	4	4	3
		230.0	9	12	5	12	4	9	10	4	10	3	9	10	4	10	3	9	10	4	4	3
	1/4"ø ELCO CRETE FLEX W/ 2" MIN. EMBEDMENT (MIN. 3,300 P.S.I. CONCRETE)	75.0	9	12	12	12	12	9	12	12	12	12	9	12	12	12	10	9	12	8	10	6
		90.0	9	12	12	12	12	9	12	12	12	10	9	12	11	12	8	9	12	7	8	5
		140.0	9	12	12	12	9	9	12	8	12	6	9	12	7	12	5	9	12	5	6	4
		180.0	9	12	9	12	7	9	12	6	12	5	9	12	6	12	4	9	12	5	6	4
		230.0	9	12	7	12	5	9	12	6	12	4	9	12	6	12	4	9	12	5	6	4
HOLLOW CONCRETE BLOCK	1/4"ø ITW TAPCON W/ 1-1/4" MIN. EMBEDMENT	75.0	9	11	6	11	4	9	7	4	7	3	8	6	4	6	▨	5	4	▨	4	▨
		90.0	9	9	5	9	4	8	6	4	6	▨	7	5	3	5	▨	4	3	▨	3	▨
		140.0	7	5	3	5	▨	5	4	▨	4	▨	4	3	▨	3	▨	3	▨	▨	▨	▨
		180.0	5	4	▨	4	▨	4	3	▨	3	▨	3	▨	▨	▨	▨	3	▨	▨	▨	▨
		230.0	4	3	▨	3	▨	3	▨	▨	▨	▨	3	▨	▨	▨	▨	3	▨	▨	▨	▨
	* 1/4"ø POWERS FASTENING CALK-IN W/ 7/8" EMBED. & 1/4-20 STAINLESS STEEL MACHINE SCREW	75.0	9	12	9	12	6	9	10	6	10	4	9	9	5	9	3	7	6	3	3	▨
		90.0	9	12	7	12	5	9	9	5	9	3	9	7	4	7	3	6	5	▨	▨	▨
		140.0	9	8	5	8	3	7	5	3	5	▨	6	4	▨	4	▨	5	4	▨	▨	▨
		180.0	8	6	3	6	▨	5	4	▨	4	▨	5	4	▨	4	▨	5	4	▨	▨	▨
		230.0	6	5	3	5	▨	5	4	▨	4	▨	5	4	▨	4	▨	5	4	▨	▨	▨
	1/4"ø ELCO CRETE FLEX W/ 1-1/4" MIN. EMBEDMENT	75.0	9	12	11	12	8	9	12	7	12	5	9	12	6	12	4	9	8	4	4	▨
		90.0	9	12	9	12	6	9	12	6	12	4	9	10	5	10	4	9	6	3	3	▨
		140.0	9	11	6	11	4	9	8	4	8	3	8	6	3	6	▨	7	5	▨	▨	▨
		180.0	9	9	4	9	3	8	6	3	6	▨	7	5	3	5	▨	7	5	▨	▨	▨
		230.0	9	7	3	7	▨	7	5	3	5	▨	7	5	3	5	▨	7	5	▨	▨	▨
	1/4"ø ELCO TAPCON W/ 1-1/4" MIN. EMBEDMENT	75.0	12	12	10	12	7	12	10	6	10	4	11	9	5	9	4	7	6	3	6	▨
		90.0	12	12	8	12	5	11	8	5	8	4	9	7	4	7	3	6	5	3	5	▨
		140.0	10	8	5	8	3	7	5	3	5	▨	6	4	3	4	▨	5	4	▨	4	▨
		180.0	8	6	4	6	▨	5	4	▨	4	▨	5	4	▨	4	▨	5	4	▨	4	▨
		230.0	6	5	3	5	▨	5	4	▨	4	▨	5	4	▨	4	▨	5	4	▨	4	▨

ANCHOR NOTES:

1. SPANS AND LOADS SHOWN HERE ARE FOR DETERMINING ANCHOR SPACING ONLY. ALLOWABLE STORM SHUTTER SPANS FOR SPECIFIC LOADS MUST BE LIMITED TO THOSE SHOWN IN TABLE 3, SHEET 11.
2. ENTER ANCHOR SCHEDULE BASED ON THE EXISTING STRUCTURE MATERIAL, ANCHOR TYPE AND EDGE DISTANCE. SELECT DESIGN LOAD GREATER THAN OR EQUAL TO NEGATIVE DESIGN LOAD ON SHUTTER AND SELECT SPAN GREATER THAN OR EQUAL TO SHUTTER SPAN.
3. SEE MOUNTING SECTION DETAILS FOR IDENTIFICATION OF CONNECTION TYPE.
4. EXISTING STRUCTURE MAY BE CONCRETE, HOLLOW BLOCK OR WOOD FRAMING. REFERENCE ANCHOR SCHEDULE FOR PROPER ANCHOR TYPE BASED ON TYPE OF EXISTING STRUCTURE AND APPROPRIATE CONNECTION TYPE. SEE CONNECTION DETAILS FOR IDENTIFICATION OF CONNECTION TYPE.
5. ANCHORS SHALL BE INSTALLED IN ACCORDANCE WITH MANUFACTURERS' RECOMMENDATIONS. EMBEDMENT LENGTHS SHALL BE AS NOTED AND DO NOT INCLUDE STUCCO OR OTHER FINISHES.
6. WHERE EXISTING STRUCTURE IS WOOD FRAMING, WOOD FRAMING CONDITIONS VARY. FIELD VERIFY THAT FASTENERS ARE INTO ADEQUATE WOOD FRAMING MEMBERS, NOT PLYWOOD. FASTENING TO PLYWOOD IS ACCEPTABLE ONLY FOR SIDE CLOSURE PIECES.
7. WHERE LAG SCREWS FASTEN TO NARROW FACE OF STUD FRAMING, FASTENER SHALL BE LOCATED IN CENTER OF NOMINAL 2" x 4" (MIN.) WOOD STUD. 3/4" EDGE DISTANCE IS ACCEPTABLE FOR WOOD FRAMING. WOOD STUD SHALL BE "SOUTHERN PINE" G=0.55 OR GREATER DENSITY. LAG SCREWS SHALL HAVE PHILLIPS PAN HEAD OR HEX HEAD.
8. MACHINE SCREWS SHALL HAVE MINIMUM OF 1/2" ENGAGEMENT OF THREADS IN BASE ANCHOR AND MAY HAVE EITHER A PAN HEAD, TRUSS HEAD, OR WAFER HEAD (SIDEWALK BOLT), U.O.N.
9. ▨ DESIGNATES ANCHOR CONDITIONS WHICH ARE NOT ACCEPTABLE USES.
10. * DESIGNATES ANCHORS WHICH ARE REMOVABLE BY REMOVING MACHINE SCREW, NUT OR WASHERED WINGNUT.

ANCHOR SCHEDULE

FASTENER SPACING (INCHES) REQUIRED FOR VARIOUS DESIGN LOADS AND SPANS

MIN. 4-1/2" EDGE DISTANCE

EXISTING STRUCTURE	ANCHOR TYPE	LOAD (W) P.S.F. MAX. (SEE NOTE 1)	SPANS UP TO 6' - 0" (SEE NOTE 1) CONNECTION TYPE (SEE NOTE 3)					SPANS UP TO 8' - 8" (SEE NOTE 1) CONNECTION TYPE (SEE NOTE 3)					SPANS UP TO 10' - 2" (SEE NOTE 1) CONNECTION TYPE (SEE NOTE 3)					SPANS UP TO 15' - 6" (SEE NOTE 1) CONNECTION TYPE (SEE NOTE 3)				
			C1	C2	C3	C4	C5	C1	C2	C3	C4	C5	C1	C2	C3	C4	C5	C1	C2	C3	C4	C5
CONCRETE	* 3/8"ø POWERS RAWL DROP-IN & 3/8"ø STAINLESS STEEL BOLT WITH 1-9/16" MIN. EMBEDMENT (MIN. 3,000 P.S.I. CONCRETE)	75.0	9	12	12	12	16	9	12	12	12	16	9	12	12	12	16	9	12	12	12	10
		90.0	9	12	12	12	16	9	12	12	12	16	9	12	12	12	13	9	12	12	12	9
		140.0	9	12	12	12	15	9	12	12	12	10	9	12	11	12	8	9	12	10	12	7
		180.0	9	12	12	12	11	9	12	10	12	8	9	12	10	12	7	9	12	10	12	7
		230.0	9	12	12	12	9	9	12	10	12	7	9	12	10	12	7	9	12	10	12	7

PRODUCT REVISED as complying with the Florida Building Code Acceptance No 02-0419.03 Expiration Date 04/03/06 By [signature] Miami Dade Product Control Division

APPROVED AS COMPLYING WITH THE SOUTH FLORIDA BUILDING CODE DATE 04/03/2001 BY [signature] PRODUCT CONTROL DIVISION BUILDING CODE COMPLIANCE OFFICE ACCEPTANCE NO. 01-0301.03

KNEZEVICH & ASSOCIATES, INC.
CONSULTING ENGINEERS • PRODUCT TESTING
1260 N. UNIVERSITY DRIVE, SUITE 180 • FORT LAUDERDALE, FL 33322
TEL: (954) 382-2800 • FAX: (954) 382-2989 • FLORIDA COA #3205
WEBSITE: WWW.KNEZEVICH.COM • E-MAIL: KA@KNEZEVICH.COM
COPYRIGHT © 2001 KNEZEVICH & ASSOCIATES, INC
6.8 SYSTEM LICENSED BY SOUTHERN SHUTTER ASSOCIATION

6.8 - HR ACCORDION SHUTTER

Signature Storm Protection, Inc. Installation & Service
1801 N.W. 1ST AVENUE BOCA RATON, FL 33432 TEL: (561) 391-5191 FAX: (561) 391-1023

V.J. KNEZEVICH PROFESSIONAL ENGINEER FL License No: PE 0010983
FEB 22 2001

no	date	by	description
1	03/19/99	VJK	COUNTY COMMENTS
2	04/13/00	JWK	GENERAL REVISIONS
3	06/22/00	VJK	ADD HR ACCORDION SYSTEM
4	12/27/00	VJK	COUNTY COMMENTS
5	02/05/01	AS	GENERAL REVISIONS
6	02/08/01	AS	COUNTY COMMENTS

SSA I.D.# 0221019825 4D

date 12/08/98
scale AS NOTED
drawn by MC
design by VJK
checked by VJK
drawing no. 01-850

02/21/01 15:17

HR ACCORDION SHUTTER
NOT APPLICABLE TO 6.8 ACCORDION SHUTTER

TABLE 4 — MINIMUM SHUTTER SEPARATION FROM GLASS

POSITIVE DESIGN LOAD (W) (P.S.F.)	ACTUAL SHUTTER SPAN (L) (FT. - IN)	MIN. SEPARATION FROM GLASS FOR INSTALLATIONS LESS THAN OR EQUAL TO 30' ABOVE GRADE (IN.)	MIN. SEPARATION FROM GLASS FOR INSTALLATIONS GREATER THAN 30' ABOVE GRADE (IN.)
40.0	9-0	2-1/2	1-3/4
	11-0	2-1/2	2-1/8
	14-4	3-1/4	3-1/4
50.0	9-0	2-1/2	1-7/8
	11-0	2-1/2	2-1/4
	13-6	3-1/4	3-1/4
60.0	9-0	2-1/2	1-7/8
	11-0	2-1/2	2-3/8
	12-11	3-1/4	3-1/4
70.0	9-0	2-1/2	2
	11-0	2-1/2	2-1/2
	12-4	3-1/4	3-1/4
80.0	9-0	2-1/2	2
	11-0	2-3/4	2-3/4
	11-11	3-1/8	3-1/8
90.0	9-0	2-1/2	2
	11-0	2-7/8	2-7/8
	11-5	3-1/8	3-1/8
100.0	9-0	2-1/2	2-1/8
	10-0	2-1/2	2-1/2
	11-1	3-1/8	3-1/8
110.0	9-0	2-1/2	2-1/4
	10-0	2-5/8	2-5/8
	10-9	3	3
120.0	9-0	2-1/2	2-1/4
	10-0	2-3/4	2-3/4
	10-5	3	3

TABLE 3 NOTES:

1. DETERMINE BOTH THE POSITIVE AND THE NEGATIVE WIND LOADS. CHECK THEIR RESPECTIVE SPANS AND USE THE LESSER VALUE OF THE TWO.
2. FOR DESIGN LOADS BETWEEN TABULATED VALUES USE NEXT HIGHER LOAD OR LINEAR INTERPOLATION MAY BE USED TO DETERMINE ALLOWABLE SPANS.

TABLE 4 NOTE:

1. ENTER TABLE 4 WITH POSITIVE DESIGN LOAD TO DETERMINE MIN. STORM SHUTTER SEPARATION FROM GLASS.

TABLE 3 — ACCORDION SHUTTER SPAN SCHEDULE FOR ALL MOUNTING CONDITIONS

DESIGN WIND LOAD W (P.S.F.)	POSITIVE WIND LOAD	NEGATIVE WIND LOAD
	L max. (FT-IN)	L max. (FT-IN)
32.5	15-2	15-6
40.0	14-4	15-6
50.0	13-6	15-6
60.0	12-10	15-6
70.0	12-4	15-6
80.0	11-10	15-2
90.0	11-5	14-3
100.0	11-1	13-7
110.0	10-9	12-8
120.0	10-5	11-7
150.0	9-8	10-10
160.0	9-6	10-2
170.0	9-3	9-6
179.1	9-1	9-1
186.4	9-0	9-0
190.0	8-9	8-9
200.0	8-4	8-4
210.0	7-11	7-11
220.0	7-7	7-7
230.0	7-3	7-3

PRODUCT REVISED
as complying with the Florida Buiding Code
Acceptance No 02-0419.03
Expiration Date 04/03/06
By
Miami Dade Product Control Division

APPROVED AS COMPLYING WITH THE SOUTH FLORIDA BUILDING CODE
DATE 04/03/2001
BY
PRODUCT CONTROL DIVISION
BUILDING CODE COMPLIANCE OFFICE
ACCEPTANCE NO 01-0301.03

KNEZEVICH & ASSOCIATES, INC.
CONSULTING ENGINEERS • PRODUCT TESTING
1260 N. UNIVERSITY DRIVE, SUITE 180 • FORT LAUDERDALE, FL 33322
TEL: (954) 382-2800 • FAX: (954) 382-2989 • FLORIDA COA #3205
WEBSITE: WWW.KNEZEVICH.COM • E-MAIL: KA@KNEZEVICH.COM
COPYRIGHT © 2001 KNEZEVICH & ASSOCIATES, INC.
68 SYSTEM LICENSED BY SOUTHERN SHUTTER ASSOCIATION

6.8 – HR
ACCORDION SHUTTER

Signature Storm Protection, Inc.
Installation & Service
1801 N.W. 1ST AVENUE
BOCA RATON, FL 33432
TEL: (561) 391-9191
FAX: (561) 391-1023

V.J. KNEZEVICH
PROFESSIONAL ENGINEER
FL License No:
PE 0010983
FEB 22 2001

revisions

no	date	by	description
1	03/19/99	VJK	COUNTY COMMENTS
2	06/13/00	VJK	GENERAL REVISIONS
3	06/22/00	VJK	ADD HR ACCORDION SYSTEM
4	12/27/00	VJK	COUNTY COMMENTS
5	02/05/01	AS	GENERAL REVISIONS
6	02/08/01	AS	COUNTY COMMENTS

SSA I.D.# 02210198254D

date 12/08/98
scale AS NOTED
drawn by MC
design by VJK
checked by VJK
drawing no. 01-850
sheet 11 of 11

02/21/01 15:18