MIAMI-DADE

BUILDING CODE COMPLIANCE OFFICE (BCCO)
PRODUCT CONTROL DIVISION

MIAMI-DADE COUNTY, FLORIDA
METRO-DADE FLAGLER BUILDING
140 WEST FLAGLER STREET, SUITE 1603
MIAMI, FLORIDA 33130-1563
(305) 375-2901 FAX (305) 375-2908

NOTICE OF ACCEPTANCE (NOA)

Robico Shutters, Inc.
4800 S. W. 51st Street
Davie, Florida 33314-5537

SCOPE:

This NOA is being issued under the applicable rules and regulations governing the use of construction materials. The documentation submitted has been reviewed by Miami-Dade County Product Control Division and accepted by the Board of Rules and Appeals (BORA) to be used in Miami Dade County and other areas where allowed by the Authority Having Jurisdiction (AHJ).

This NOA shall not be valid after the expiration date stated below. The Miami-Dade County Product Control Division (In Miami Dade County) and/or the AHJ (in areas other than Miami Dade County) reserve the right to have this product or material tested for quality assurance purposes. If this product or material fails to perform in the accepted manner, the manufacturer will incur the expense of such testing and the AHJ may immediately revoke, modify, or suspend the use of such product or material within their jurisdiction. BORA reserves the right to revoke this acceptance, if it is determined by Miami-Dade County Product Control Division that this product or material fails to meet the requirements of the applicable building code.

This product is approved as described herein, and has been designed to comply with the High Velocity Hurricane Zone of the Florida Building Code.

DESCRIPTION: "HT-100" Aluminum Accordion Shutter

APPROVAL DOCUMENT: Drawing No. 02-619, titled " RobiCordions ", sheets 1 through 6 of 6, prepared by Knezevich & Associates, Inc., dated July 23, 1996, last revision #6 dated June 10, 1999, bearing the Miami-Dade County Product Control Approval stamp with the Notice of Acceptance number and approval date by the Miami-Dade County Product Control Division.

MISSILE IMPACT RATING: Large and Small Missile Impact

LABELING: Each unit shall bear a permanent label with the manufacturer's name or logo, city, state and following statement: "Miami-Dade County Product Control Approved", unless otherwise noted herein.

RENEWAL of this NOA shall be considered after a renewal application has been filed and there has been no change in the applicable building code negatively affecting the performance of this product.

TERMINATION of this NOA will occur after the expiration date or if there has been a revision or change in the materials, use, and/or manufacture of the product or process. Misuse of this NOA as an endorsement of any product, for sales, advertising or any other purposes shall automatically terminate this NOA. Failure to comply with any section of this NOA shall be cause for termination and removal of NOA.

ADVERTISEMENT: The NOA number preceded by the words Miami-Dade County, Florida, and followed by the expiration date may be displayed in advertising literature. If any portion of the NOA is displayed, then it shall be done in its entirety.

INSPECTION: A copy of this entire NOA shall be provided to the user by the manufacturer or its distributors and shall be available for inspection at the job site at the request of the Building Official.

This NOA consists of this page 1 as well as approval document mentioned above.
The submitted documentation was reviewed by **Helmy A. Makar, P.E.**

PRODUCT CONTROL ACCEPTED

NOA No 02-0419.10
Expiration Date: 05/01/2007
Approval Date: 05/01/2002

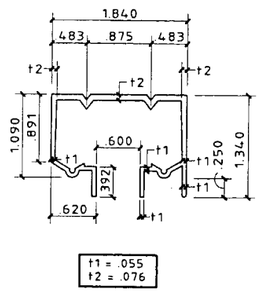

1 HEADER-CLG. MOUNTED

SCALE: HALF SIZE

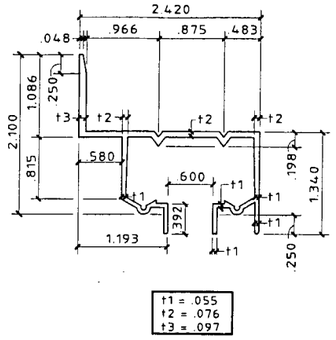

2 HEADER WALL MOUNTED

SCALE: HALF SIZE

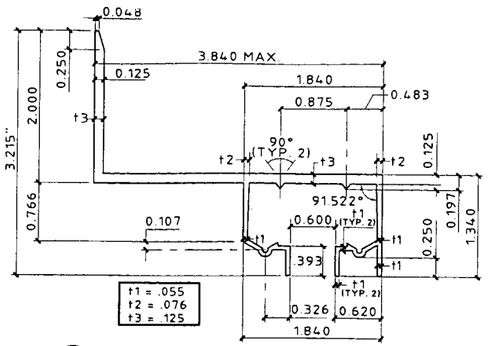

2a BUILD-OUT WALL HEADER

SCALE: HALF SIZE

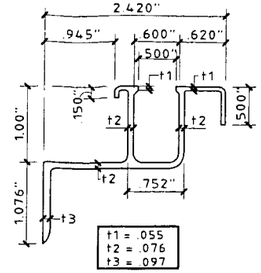

3 SILL-WALL MOUNTED

SCALE: HALF SIZE

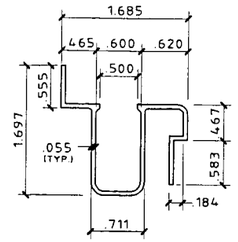

4 ADJ. SILL-TOP

SCALE: HALF SIZE

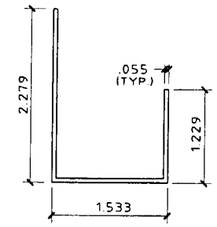

5 ADJ. SILL-BOT.

SCALE: HALF SIZE

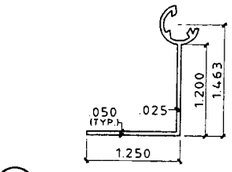

6a 90° END SLAT

SCALE: HALF SIZE

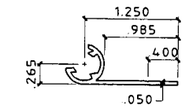

7 FLAT END SLAT

SCALE: HALF SIZE

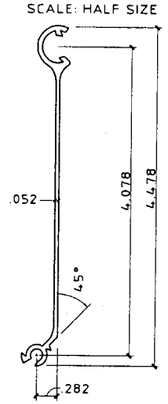

TYPE 1

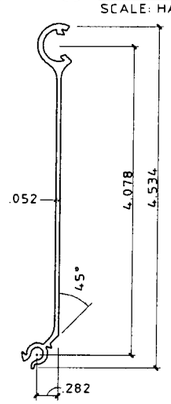

TYPE 2

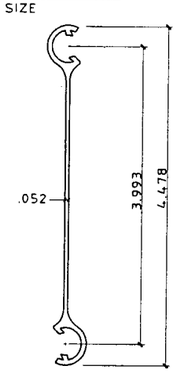

EITHER TYPE 1 OR TYPE 2 SLAT IS ACCEPTABLE.
THESE SLATS ARE INTERCHANGEABLE

8 TYP. SLATS

SCALE: HALF SIZE

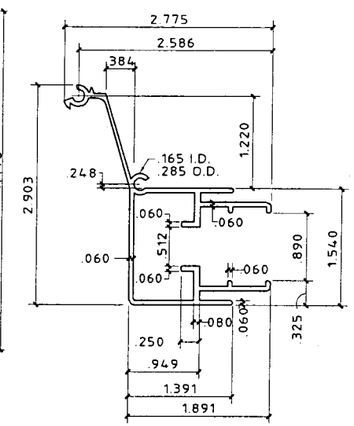

9 CENTER MATE 1

SCALE: HALF SIZE

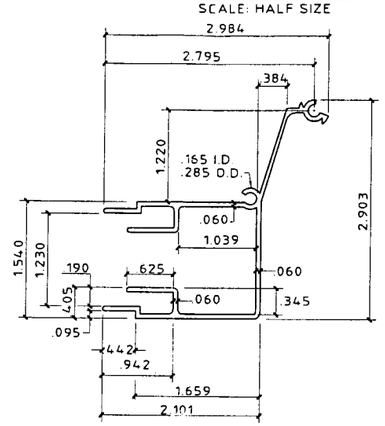

10 CENTER MATE 2

SCALE: HALF SIZE

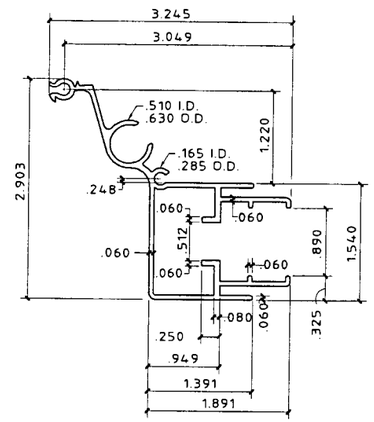

9a CENTER MATE 1 W/ LOCKING ROD

SCALE: HALF SIZE

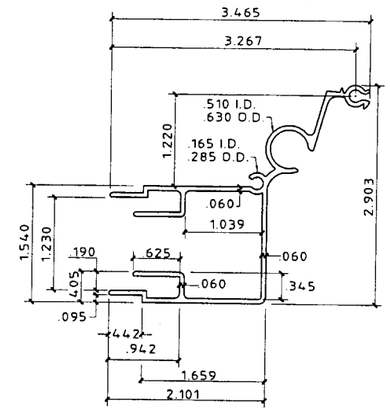

10a CENTER MATE 2 W/ LOCKING ROD

SCALE: HALF SIZE

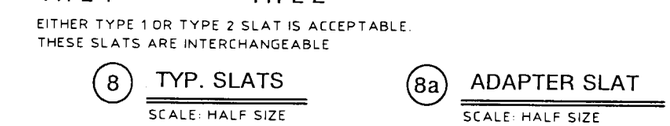

TOP BOTTOM CARRIER

12 ROLLER ASSEMBLY

SCALE: HALF SIZE

12a BUSHINGS

SCALE: FULL SIZE

GENERAL NOTES:

1. THIS ACCORDION SHUTTER SYSTEM IS DESIGNED IN ACCORDANCE WITH THE FLORIDA BUILDING CODE.
2. POSITIVE AND NEGATIVE DESIGN PRESSURE CALCULATIONS SHALL BE PERFORMED FOR SPECIFIC JOBS IN ACCORDANCE WITH ASCE 7-98 "MINIMUM DESIGN LOADS FOR BUILDINGS AND OTHER STRUCTURES". TABLES SHALL BE REFERENCED AT APPROPRIATE DESIGN LOADS.
3. ALUMINUM EXTRUSIONS SHALL BE 6063-T6 ALUMINUM ALLOY, U.O.N.
4. EACH SHUTTER ASSEMBLY SHALL BE PERMANENTLY LABELED AT THE BOTTOM END OF THE LOCKING CENTERMATE AS FOLLOWS:

   ROBICO SHUTTERS, INC.
   DAVIE, FLORIDA
   MIAMI-DADE COUNTY PRODUCT CONTROL APPROVED
5. ALL BOLTS AND WASHERS SHALL BE 2024-T4 ALUMINUM ALLOY, STAINLESS STEEL, OR GALVANIZED STEEL WITH A MIN. Fy = 33 KSI. POP RIVETS SHALL BE 3/16"Ø 5052 ALUM. ALLOY
6. ALL SHUTTERS SHALL HAVE A LOCKING MECHANISM AT CENTER OR SIDE CLOSURE WITHIN 18" OF CENTER (VERT.). LOCKING MECHANISM SHALL BE LOCKED TO PROVIDE HURRICANE PROTECTION.
7. THE DETAILS AND SPECIFICATIONS SHOWN HEREIN REPRESENT THE PRODUCTS TESTED FOR IMPACT, CYCLIC AND UNIFORM STATIC AIR PRESSURE IN CONFORMANCE W/ MIAMI-DADE COUNTY PROTOCOLS PA 201, 202, AND 203.
8. DESIGN IS BASED ON CONSTRUCTION TESTING CORPORATION (C.T.C.) TEST REPORT No. 96-024 AND 96-037.
9. TOP DETAILS MAY ALSO BE USED AS SILLS.
10. FLOOR TRACKS MAY BE REMOVABLE AT NON-STACKING LOCATIONS. USE REMOVABLE ANCHORS SUCH AS CALK-IN ANCHORS.
11. THE PERMIT HOLDER SHALL VERIFY THE ADEQUACY OF THE EXISTING STRUCTURE TO SUSTAIN THE NEW SUPERIMPOSED LOADS AND TO VERIFY ALL DIMENSIONS AT THE JOB SITE BEFORE COMMENCING WITH THE WORK.
12. ANCHORS SHALL BE INSTALLED IN ACCORDANCE WITH MANUFACTURER'S RECOMMENDATIONS. EMBEDMENT LENGTHS SHALL BE AS NOTED AND DO NOT INCLUDE STUCCO OR OTHER FINISHES.

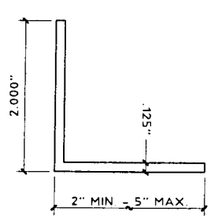

11 ANGLE

SCALE: HALF SIZE

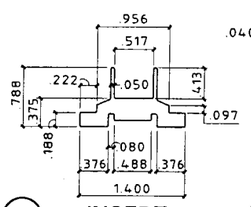

13 INSERT

SCALE: HALF SIZE

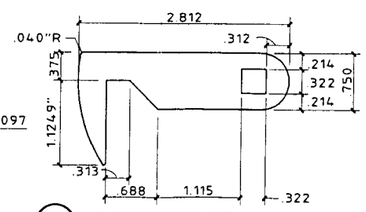

14 LOCKING ARM

SCALE: HALF SIZE
1/8" THICK STAINLESS STEEL

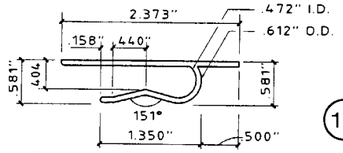

15 LOCKING CLIP

SCALE: HALF SIZE

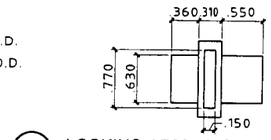

17 LOCKING ARM ALIGNMENT BUSHING (NYLON)

SCALE: HALF SIZE

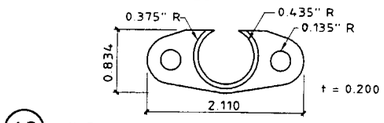

18 INSIDE HANDLE SHIM (NYLON)

SCALE: HALF SIZE

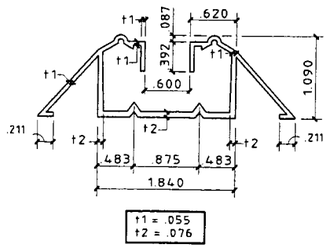

16 WALKOVER SILL FLOOR MOUNTED

SCALE: HALF SIZE

Approved as complying with the Florida Building Code
Date 05/01/2002
NOA# 02-0419.10
Miami Dade Product Control Division
By Helmy A. Moker

KNEZEVICH & ASSOCIATES, INC.
CONSULTING ENGINEERS • PRODUCT TESTING
1260 N. UNIVERSITY DRIVE, SUITE 180 • FORT LAUDERDALE, FL 33322
TEL: (954) 382-2800 • FAX: (954) 382-2989 • FLORIDA COA #3205
WEBSITE: WWW.KNEZEVICH.COM • E-MAIL: KA@KNEZEVICH.COM

COPYRIGHT © 2002 KNEZEVICH & ASSOCIATES, INC
HT100 LICENSED BY HI-TECH SHUTTER GROUP, INC.

RobiCordions ™

Manufacturers of Hurricane Protection
ROBICO SHUTTERS, INC. ™
4800 S.W. 51st Street
Davie, FL 33314-5537
Tel. (954) 689-7545
Fax (954) 689-8797

V.I. KNEZEVICH
PROFESSIONAL ENGINEER
Fl. License No: FE 0010983

APR 17 2002

revisions

no	date	by	description
1	08/08/96		NEW TEST DATA ADDED
2	10/10/96		COUNTY COMMENTS
3	11/26/97	JWK	REVISE FASTENERS
4	01/16/98	JWK	FASTENER NOTES
5	04/30/98	JWK	SLAT Z/REV.2,4 DESC.
6	06/10/99	VJK	CENTER MATES/FASTENERS

HTSG I.D. # 041702961 6D

date 07/23/1996
scale AS NOTED
drawn by MCR
design by VJK
checked by VJK
drawing no. 02-619
sheet 1 of 6

Print Information: J:\CADD\Associations\Hi-Tech\Robico\02-619\R6-sub\02-619-01.dwg MCantu 04/17/2002 03:55:47pm

04/17/02 15:52

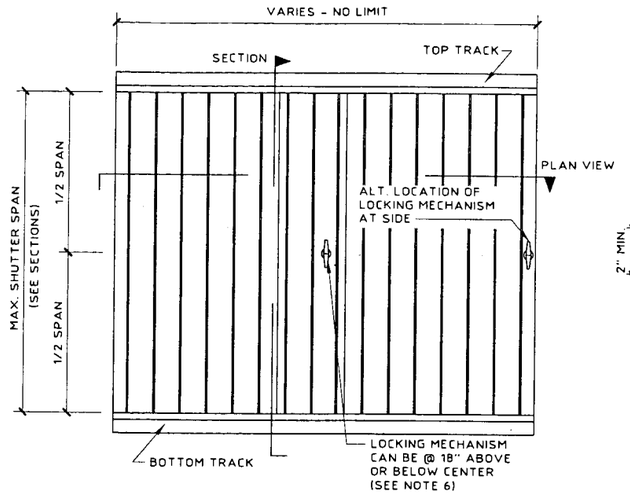

TYPICAL ELEVATION

N.T.S.

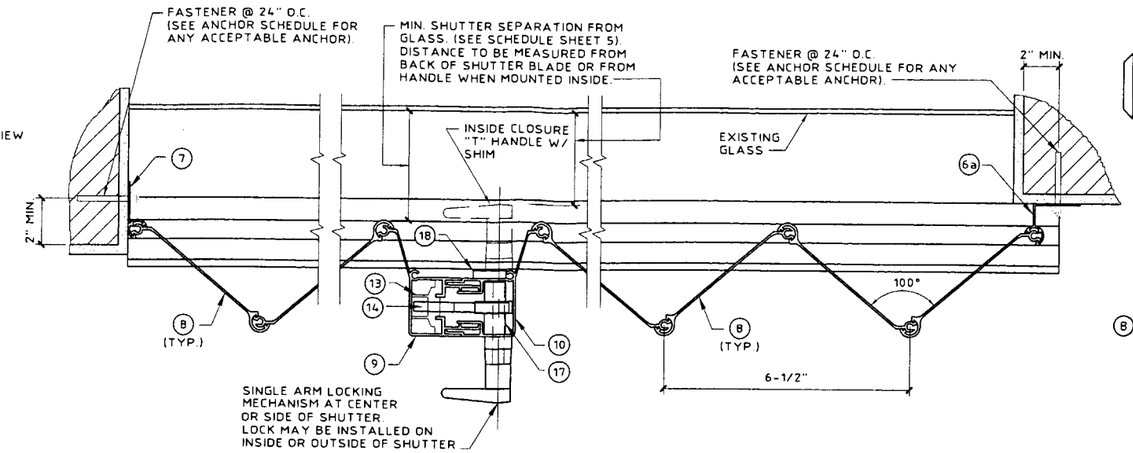

TYPICAL PLAN VIEW

SCALE: 3" = 1'-0"

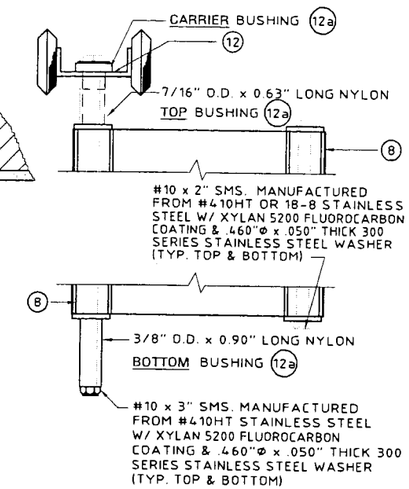

SCREW BUSHING & ROLLER/ BUSHING ASSEMBLY

SCALE: HALF SIZE

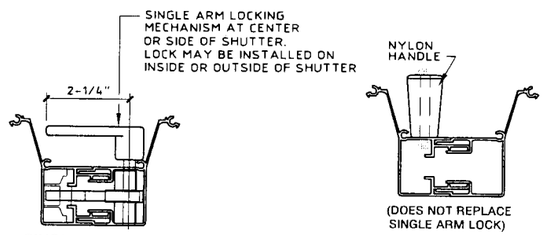

SINGLE ARM LOCK

OPTIONAL CLOSER HANDLE

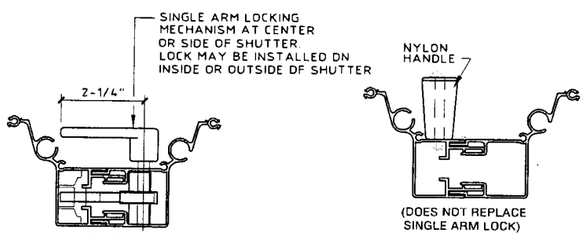

SINGLE ARM LOCK

OPTIONAL CLOSER HANDLE

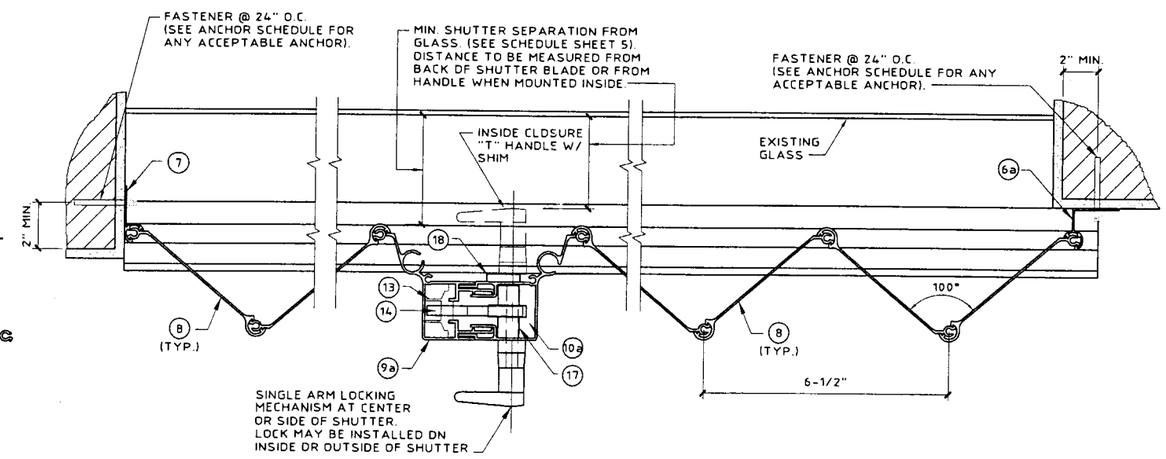

OPTIONAL PLAN VIEW

SCALE: 3" = 1'-0"

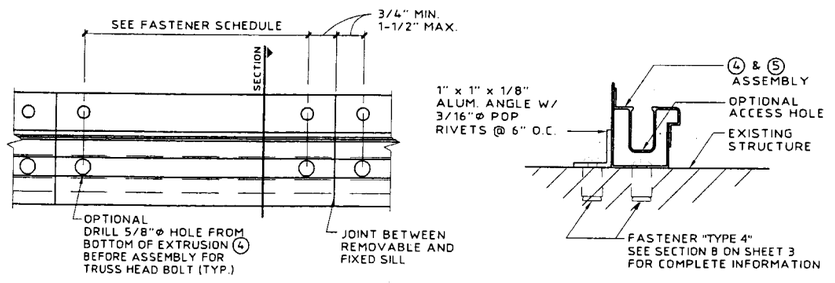

PLAN VIEW

SECTION

REMOVABLE FLOOR TRACK DETAIL

SCALE : 3"= 1'- 0"

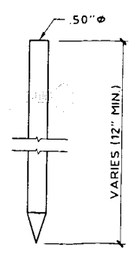

USED WITH PIECES (9a) AND (10a)

LOCKING PIN

SCALE: 1-1/2" = 1'-0"

Approved as complying with the Florida Building Code
Date 05/01/2002
NOA# 02-0419.10
Miami Dade Product Control Division
By Helmy A. Mak

KNEZEVICH & ASSOCIATES, INC.
CONSULTING ENGINEERS • PRODUCT TESTING
1260 N. UNIVERSITY DRIVE, SUITE 180 • FORT LAUDERDALE, FL 33322
TEL: (954) 382-2800 • FAX: (954) 382-2989 • FLORIDA COA #3205
WEBSITE: WWW.KNEZEVICH.COM • E-MAIL: KA@KNEZEVICH.COM
COPYRIGHT © 2002 KNEZEVICH & ASSOCIATES, INC
HT100 LICENSED BY HI-TECH SHUTTER GROUP, INC.

RobiCordions™

4800 S.W. 51st Street
Davie, FL 33314-5537
Tel. (954) 689-7545
Fax (954) 689-8797

Manufacturers of Precision Storm Protection
ROBICO SHUTTERS, INC.™

V.J. KNEZEVICH
PROFESSIONAL ENGINEER
FL License No. PE 0010983

APR 17 2002

revisions

no	date	by	description
1	08/08/96		NEW TEST DATA ADDED
2	10/10/96		COUNTY COMMENTS
3	11/26/97	JWK	REVISE FASTENERS
4	07/16/98	JWK	FASTENER NOTES
5	04/30/98	JWK	SLAT 2/REV 2.4 DESC.
6	06/10/99	VJK	CENTER MATES/FASTENERS

HTSG I.D. # 041702961680

date 07/23/1996	
scale AS NOTED	drawn by MCR
design by VJK	checked by VJK
drawing no. 02-619	
sheet 2 of 6	

Print Information: J:\CADD\Associations\Hi-Tech\Robico\02-619\R6-sub\02-619-02.dwg MCantu 04/17/2002 03:55:55pm

04/17/02 15:52

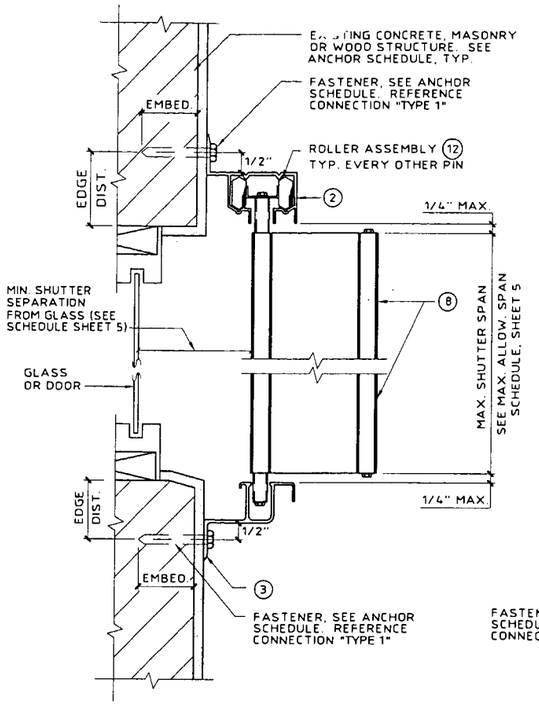

(A) WALL MOUNT SECTION

SCALE : 3"= 1'- 0"

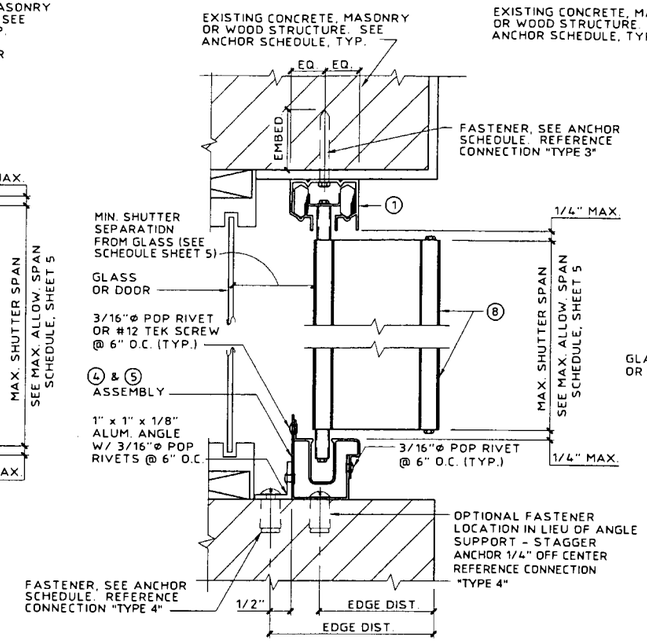

(B) CEILING/INSIDE MOUNT SECTION

SCALE : 3"= 1'- 0"

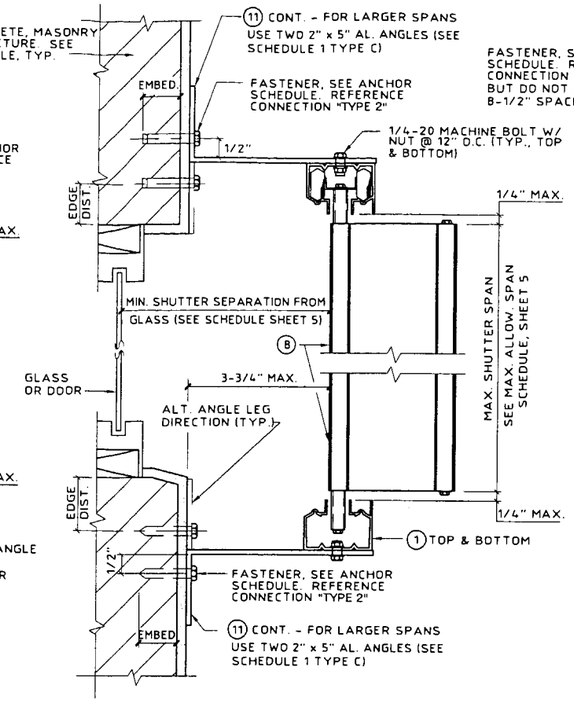

(C) BUILD-OUT MOUNT SECTION

SCALE : 3"= 1'- 0"

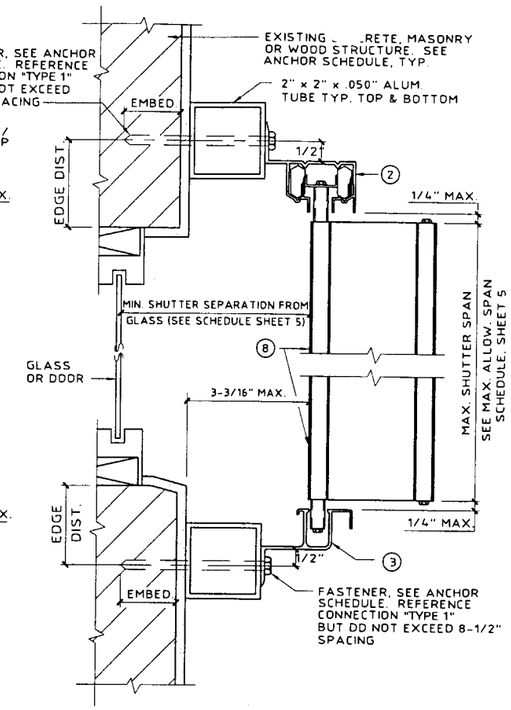

(D) BUILD-OUT MOUNT SECTION

SCALE : 3" = 1'-0"

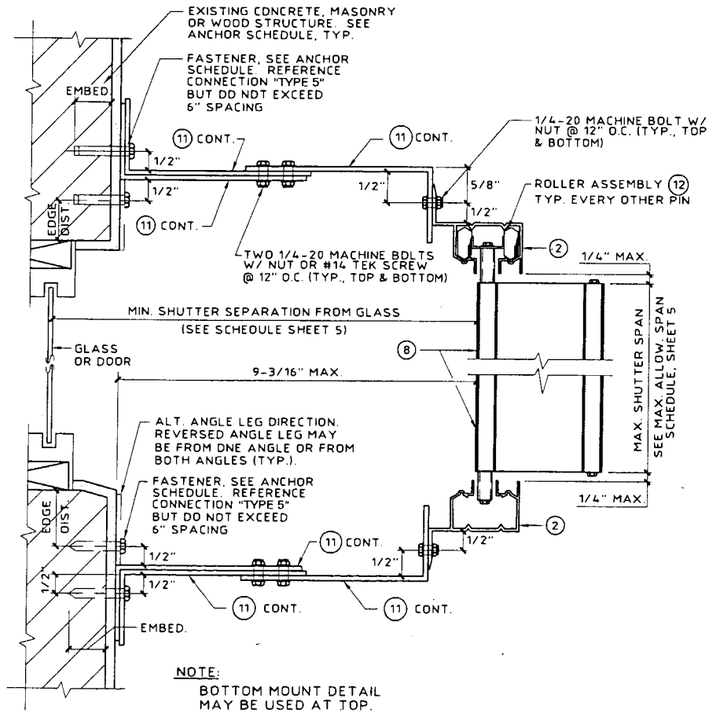

(E) BUILD-OUT MOUNT SECTION

SCALE : 3"= 1'- 0"

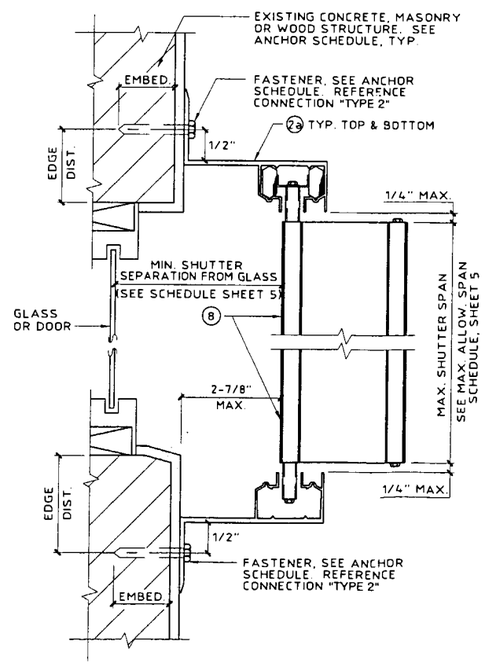

(F) BUILD-OUT MOUNT SECTION

SCALE : 3"= 1'- 0"

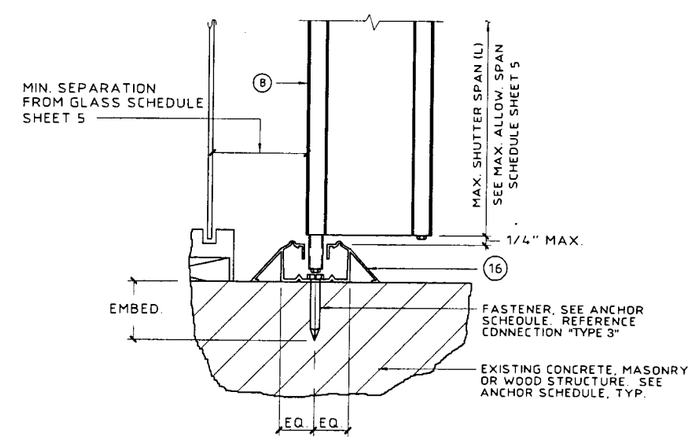

(G) FLOOR MOUNT SECTION

SCALE : 3"= 1'- 0"

Approved as complying with the Florida Building Code
Date 05/01/2002
NOA# 02-0419.10
Miami Dade Product Control Division
By [signature]

KNEZEVICH & ASSOCIATES, INC.
CONSULTING ENGINEERS • PRODUCT TESTING
1260 N. UNIVERSITY DRIVE, SUITE 180 • FORT LAUDERDALE, FL 33322
TEL: (954) 382-2800 • FAX: (954) 382-2989 • FLORIDA COA #3205
WEBSITE: WWW.KNEZEVICH.COM • E-MAIL: KA@KNEZEVICH.COM

COPYRIGHT © 2002 KNEZEVICH & ASSOCIATES, INC

HT100 LICENSED BY HI-TECH SHUTTER GROUP, INC.

RobiCordions™
SHUTTERS, INC.™
4800 S.W. 51st Street
Davie, FL 33314-5537
Tel. (954) 689-7545
Fax (954) 689-8797
Manufacturers of Hurricane Storm Protection
ROBICO

V.J. KNEZEVICH
PROFESSIONAL ENGINEER
FL License No: PE 0010983

APR 17 2002

revisions

no	date	by	description
1	08/08/96		NEW TEST DATA ADDED
2	10/10/96		COUNTY COMMENTS
3	11/26/97	JWK	REVISE FASTENERS
4	01/16/98	JWK	FASTENER NOTES
5	06/30/98	JWK	SLAT 2/REV 2.4 DESC.
6	06/10/99	VJK	CENTER MATES/FASTENERS

HTSG I.D. # 041702961168D

date 07/23/1996
scale AS NOTED
drawn by MCR
design by VJK
checked by VJK
drawing no 02-619
sheet 3 of 6

Print Information: J:\CADD\Associations\Hi-Tech\Robico\02-619\R6-sub\02-619-03.dwg MCantu 04/17/2002 03:56:04pm

04/17/02 15:52

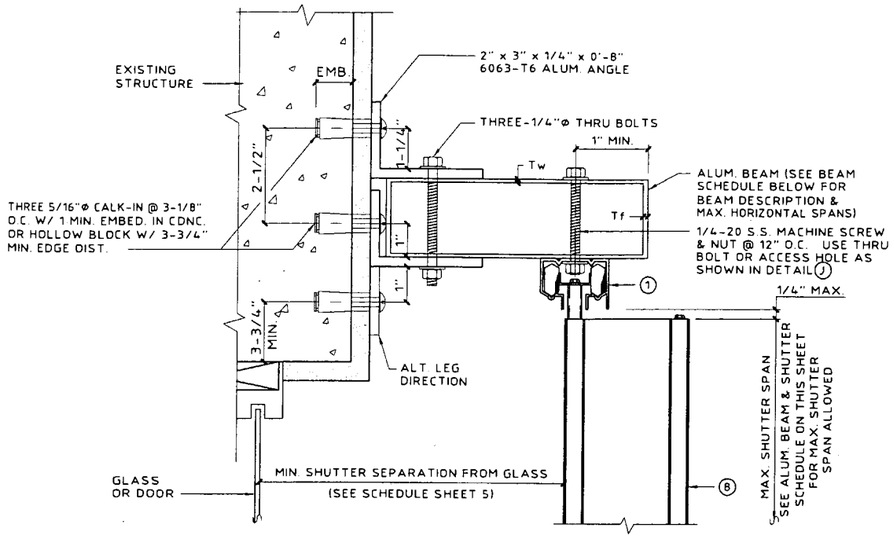

(MAX. DESIGN LOAD ± 72 PSF)

(H) TOP SUPPORT BEAM DETAIL

SCALE : 3"= 1'- 0"

ALUM. BEAM & SHUTTER SCHEDULE		
DESCRIPTION	SHUTTER SPAN	BEAM SPAN
2" x 5" Tw = .125" Tf = .125"	5'-0"	9'-5"
	8'-0"	8'-1"
	10'-0"	7'-6"
2" x 8" Tw = .072" Tf = .224"	5'-0"	14'-0"
	8'-0"	12'-0"
	10'-0"	11'-1"
2" x 9" Tw = .072" Tf = .224"	5'-0"	15'-5"
	8'-0"	13'-2"
	10'-0"	12'-3"

NOTE:
1. USE BEAM SCHEDULE FOR DETAILS (H) AND (J).
2. SHUTTER SPAN TO BE LIMITED TO THOSE SHOWN IN TABLE, SHEET 5.
3. BEAM SPAN SHALL BE CONSIDERED AS THE DISTANCE FROM ℄ OF SUPPORT TO ℄ OF SUPPORT.

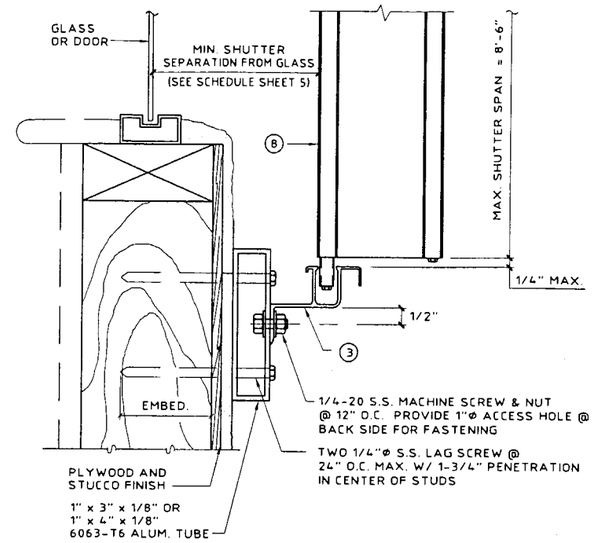

(MAX. DESIGN LOAD = ± 72 P.S.F.)

(I) WALL MOUNT SECTION - USING ALUM. TUBE

SCALE : 3"= 1'- 0"

Approved as complying with the Florida Building Code
Date 05/01/2002
NOA# 02-0419.10
Miami Dade Product Control Division
By Helena A. Melon

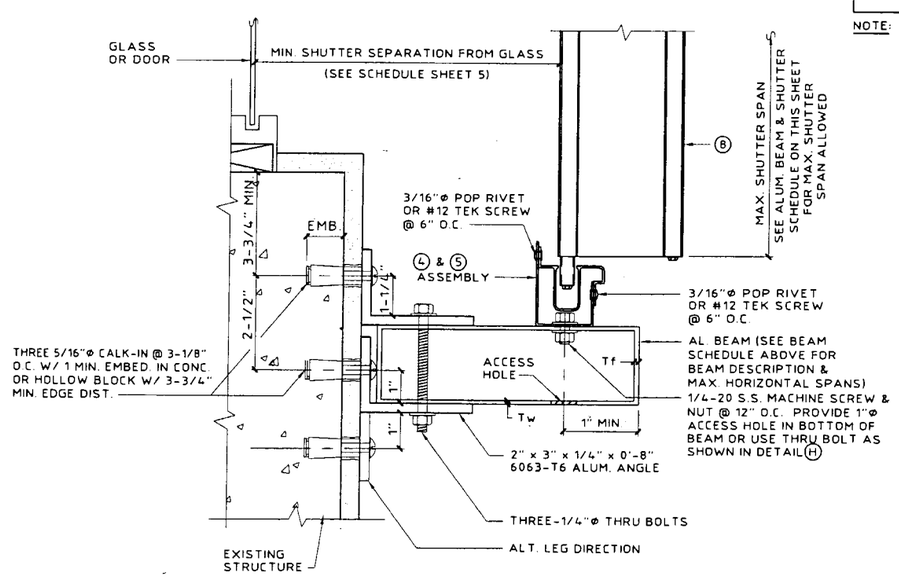

(MAX. DESIGN LOAD ± 72 PSF)

(J) BOTTOM SUPPORT BEAM DETAIL

SCALE : 3"= 1'- 0"

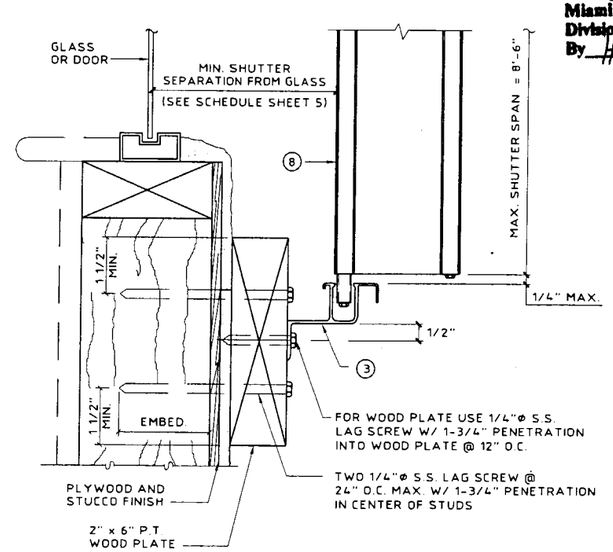

(MAX. DESIGN LOAD = ± 72 P.S.F.)

(K) WALL MOUNT SECTION - USING 2" x 6" WOOD PLATE

SCALE : 3"= 1'- 0"

KNEZEVICH & ASSOCIATES, INC.
CONSULTING ENGINEERS • PRODUCT TESTING
1260 N. UNIVERSITY DRIVE, SUITE 180 • FORT LAUDERDALE, FL 33322
TEL: (954) 382-2800 • FAX: (954) 382-2989 • FLORIDA COA #3205
WEBSITE: WWW.KNEZEVICH.COM • E-MAIL: KA@KNEZEVICH.COM

COPYRIGHT © 2002 KNEZEVICH & ASSOCIATES, INC.
HT100 LICENSED BY HI-TECH SHUTTER GROUP, INC.

RobiCordions ™
4800 S.W. 51st Street
Davie, FL 33314-5537
Tel. (954) 689-7545
Fax (954) 689-8797
Manufacturers Of Precision Storm Protection
ROBICO SHUTTERS, INC. ™

V.J. KNEZEVICH
PROFESSIONAL ENGINEER
Fl. License No: PE-0010983

APR 17 2002

revisions

no	date	by	description
1	08/08/96		NEW TEST DATA ADDED
2	10/10/96		COUNTY COMMENTS
3	11/26/97	JWK	REVISE FASTENERS
4	01/16/98	JWK	FASTENER NOTES
5	06/30/98	JWK	SLAT 2/REV 2.4 DESC.
6	06/10/99	VJK	CENTER MATES/FASTENERS

HTSG I.D. # 041702961680

date 07/23/1996	
scale AS NOTED	drawn by MCR
design by VJK	checked by VJK

drawing no. 02-619

sheet 4 of 6

Print Information: J:\CADD\Associations\Hi-Tech\Robico\02-619\R6-sub\02-619-04.dwg MCantu 04/17/2002 03:56:15pm

04/17/02 15:52

TABLE 1

MAXIMUM ALLOWABLE SPAN SCHEDULE

NEG. DESIGN LOAD (PSF)	TYPE A ALL MOUNTING CONDITIONS EXCEPT Ⓒ Ⓔ Ⓕ (FT - IN)	TYPE B DETAIL Ⓕ OR DETAIL Ⓒ W/ SINGLE ANGLE REQUIRED 3-3/4" MAX. B.D. (FT - IN)	TYPE C DETAIL Ⓒ DOUBLE ANGLE REQUIRED 3-3/4" MAX. B.D. (FT - IN)	TYPE D DETAIL Ⓔ 9-3/16" MAX. B.D. (FT - IN)
30.0	13 - 1	12 - 4	13 - 1	12 - 7
38.0	13 - 1	11 - 0	13 - 1	11 - 2
40.0	12 - 11	10 - 8	12 - 5	10 - 11
48.0	12 - 4	9 - 9	10 - 4	10 - 0
52.0	12 - 1	9 - 4	9 - 7	9 - 7
56.0	11 - 11	9 - 0	9 - 0	9 - 3
61.5	11 - 7	8 - 7	8 - 7	8 - 10
63.3	11 - 6	8 - 6	8 - 6	8 - 8
66.8	10 - 11	8 - 3	8 - 3	8 - 5
67.5	10 - 9	8 - 3	8 - 3	8 - 5
71.2	10 - 3	8 - 0	8 - 0	8 - 2
75.0	9 - 8	7 - 8	7 - 8	8 - 0
81.4	8 - 11	7 - 0	7 - 0	7 - 4
86.8	8 - 5	6 - 7	6 - 7	6 - 10
91.4	8 - 0	6 - 3	6 - 3	6 - 6
100.0	7 - 3	5 - 9	5 - 9	6 - 0
110.0	6 - 7	5 - 2	5 - 2	5 - 5
120.0	6 - 1	4 - 9	4 - 9	5 - 0
130.0	5 - 7	4 - 5	4 - 5	4 - 7
140.0	5 - 2	4 - 1	4 - 1	4 - 3
150.0	4 - 10	3 - 10	3 - 10	4 - 0
160.0	4 - 6	3 - 7	3 - 7	3 - 9
170.0	4 - 3	3 - 4	3 - 4	3 - 6
180.0	4 - 0	3 - 2	3 - 2	3 - 4
190.0	3 - 10	3 - 0	3 - 0	3 - 1
200.0	3 - 7	2 - 10	2 - 10	3 - 0
210.0	3 - 5	2 - 8	2 - 8	2 - 10

NOTES:

1. REFERENCE APPROPRIATE COLUMN IN TABLE 1 BASED ON MOUNTING CONDITION IN FIELD.
2. FOR DESIGN LOADS BETWEEN TABULATED VALUES, USE NEXT HIGHER LOAD OR LINEAR INTERPOLATION MAY BE USED TO DETERMINE ALLOWABLE SPANS.
3. ENTER TABLE 1 WITH NEGATIVE DESIGN LOAD TO DETERMINE MAX. SHUTTER SPAN.
4. ENTER TABLE 2 WITH POSITIVE DESIGN LOAD TO DETERMINE MIN. SHUTTER SEPARATION FROM GLASS.

TABLE 2

MINIMUM SHUTTER SEPARATION FROM GLASS (IN)

POSITIVE DESIGN LOAD (W) (PSF)	ACTUAL SPAN (FT - IN)	MIN. SEPARATION FROM GLASS FOR INSTALLATIONS LESS THAN 30' ABOVE GRADE (INCHES)	MIN. SEPARATION FROM GLASS FOR INSTALLATIONS GREATER THAN 30' ABOVE GRADE (INCHES)
30.0	5 - 0	2-7/8	1-1/2
	7 - 0	2-7/8	1-5/8
	8 - 0	2-7/8	1-5/8
	11 - 0	3	2-1/8
	13 - 1	3-3/4	2-3/4
40.0	5 - 0	2-7/8	1-1/2
	7 - 0	2-7/8	1-5/8
	8 - 0	2-7/8	1-5/8
	11 - 0	3	2-1/4
	12 - 11	3-3/4	3
50.0	5 - 0	2-7/8	1-1/2
	7 - 0	2-7/8	1-5/8
	8 - 0	2-7/8	1-3/4
	11 - 0	3	2-1/2
	12 - 2	3-3/4	3
60.0	5 - 0	2-7/8	1-1/2
	7 - 0	2-7/8	1-5/8
	8 - 0	2-7/8	1-3/4
	11 - 0	3	1-3/4
	11 - 8	3-3/4	3
70.0	5 - 0	2-7/8	1-1/2
	7 - 0	2-7/8	1-5/8
	8 - 0	2-7/8	1-7/8
	9 - 6	3	2-1/4
	10 - 4	3	2-5/8
80.0	5 - 0	2-7/8	1-1/2
	7 - 0	2-7/8	1-3/4
	8 - 0	2-7/8	1-7/8
	11 - 0	3-1/8	3-1/8
	12 - 1	4	4
90.0	5 - 0	2-7/8	1-1/2
	7 - 0	2-7/8	1-3/4
	8 - 0	2-7/8	2
	11 - 0	3-3/8	3-3/8
	11 - 6	3-7/8	4
100.0	5 - 0	2-7/8	1-1/2
	7 - 0	2-7/8	1-3/4
	8 - 0	2-7/8	2
	9 - 0	3	2-3/4
	10 - 3	3	3

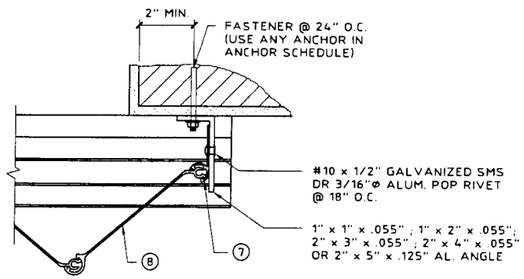

Ⓛ ALT. CLOSURE DETAIL

SCALE: 3" = 1'-0"

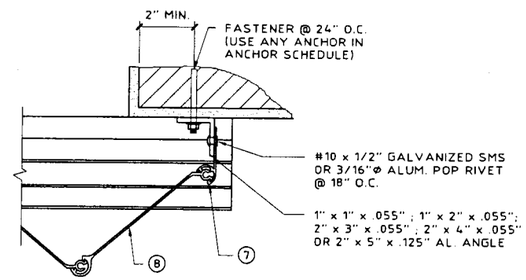

Ⓜ ALT. CLOSURE DETAIL

SCALE: 3" = 1'-0"

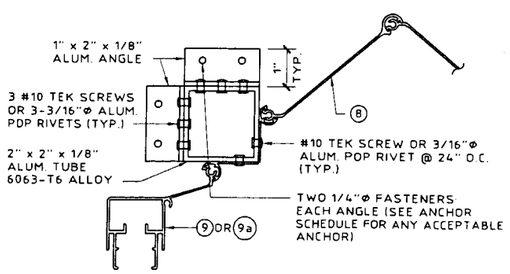

NOTE:
EITHER CONDITION MAY BE TYPICAL FOR EITHER SIDE

Ⓝ CORNER CLOSURE DETAIL

SCALE: 3" = 1'-0"

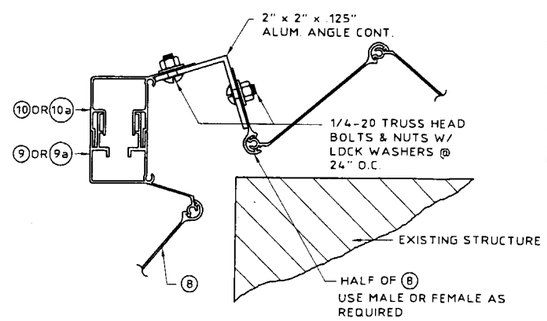

Ⓟ ALT. CORNER CLOSURE DETAIL

SCALE: 3" = 1'-0"

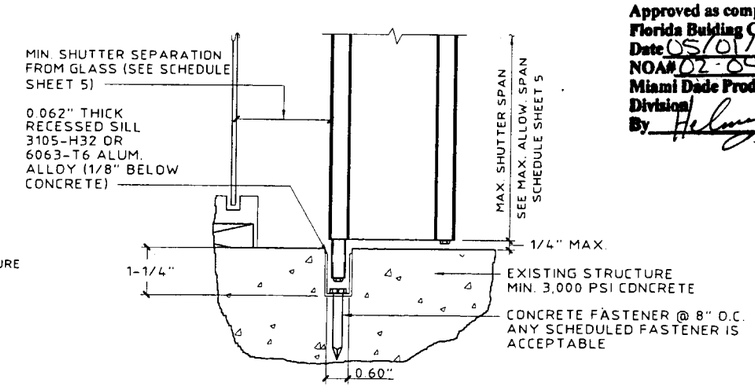

Ⓠ ALTERNATE FLOOR MOUNT DETAIL

SCALE : 3"= 1'- 0"

Approved as complying with the Florida Building Code
Date 05/01/2002
NOA# 02-0419.10
Miami Dade Product Control Division
By

KNEZEVICH & ASSOCIATES, INC.
CONSULTING ENGINEERS • PRODUCT TESTING
1260 N. UNIVERSITY DRIVE, SUITE 180 • FORT LAUDERDALE, FL 33322
TEL: (954) 382-2800 • FAX: (954) 382-2989 • FLORIDA COA #3205
WEBSITE: WWW.KNEZEVICH.COM • E-MAIL: KA@KNEZEVICH.COM

COPYRIGHT © 2002 KNEZEVICH & ASSOCIATES, INC.

HT100 LICENSED BY HI-TECH SHUTTER GROUP, INC.

RobiCordions™

ROBICO SHUTTERS, INC.™
Manufacturers of Precision Storm Protection
4800 S.W. 51st Street
Davie, FL 33314-5537
Tel. (954) 689-7545
Fax (954) 689-8797

V.J. KNEZEVICH
PROFESSIONAL ENGINEER
FL License No: PE 0010983

APR 17 2002

revisions

no	date	by	description
1	08/08/96		NEW TEST DATA ADDED
2	10/10/96		COUNTY COMMENTS
3	11/26/97	JWK	REVISE FASTENERS
4	01/14/98	JWK	FASTENER NOTES
5	04/30/98	JWK	SLAT 2/REV 2,4 DESC.
6	06/10/99	VJK	CENTER MATES/FASTENERS

HTSG I.D. # 041702966BD

date 07/23/1996
scale AS NOTED
drawn by MCR
design by VJK
checked by VJK
drawing no. 02-619
sheet 5 of 6

Print Information: J:\CADD\Associations\Hi-Tech\Robico\02-619\R6-sub\02-619-05.dwg MCantu 04/17/2002 03:56:23pm

04/17/02 15:52

ANCHOR SCHEDULE

FASTENER MAXIMUM SPACING (INCHES) REQUIRED FOR VARIDUS DESIGN LOADS AND SPANS

(▨ = hatched cell; see Note 9)

MIN. 2" EDGE DISTANCE

EXISTING STRUCTURE	ANCHOR TYPE	LOAD (W) PSF MAX. (SEE NOTE 1)	SPANS UP TO 5'-8" (SEE NOTE 1) CONNECTION TYPE 1	2	3	4	5	SPANS UP TO 8'-0" (SEE NOTE 1) CONNECTION TYPE 1	2	3	4	5	SPANS UP TO 9'-0" (SEE NOTE 1) CONNECTION TYPE 1	2	3	4	5	SPANS UP TO 13'-1" (SEE NOTE 1) CONNECTION TYPE 1	2	3	4	5
CONCRETE	1/4"ø ITW TAPCON W/ 1-1/4" MIN. EMBEDMENT (MIN. 3,100 P.S.I. CONCRETE)	48.0	12	12	12	7	9	12	12	10	5	7	12	12	9	4	6	6	12	6	3	4
		62.0	12	12	11	5	7	12	12	8	3	5	9	12	7	3	4	4	11	5	▨	3
		72.0	12	12	10	4	6	8	12	7	3	4	5	12	6	3	4	4	11	5	▨	3
		92.0	11	12	7	3	5	4	11	5	▨	3	4	11	5	▨	3	4	11	5	▨	3
		210.0	4	11	5	▨	3	4	11	5	▨	3	4	11	5	▨	3	4	11	5	▨	3
	* 1/4"ø ELCO MALE/ FEMALE "PANELMATE" W/ 1-1/4 MIN. EMBEDMENT & 1/4-20 MACHINE SCREW WITH NUT (MIN. 3,000 P.S.I. CONCRETE)	48.0	12	12	11	5	7	12	12	8	3	5	12	12	7	3	5	5	10	4	▨	3
		62.0	12	12	8	4	6	11	12	6	3	4	7	11	5	▨	3	3	8	4	▨	▨
		72.0	12	12	7	3	5	6	11	5	▨	3	4	9	4	▨	3	3	8	4	▨	▨
		92.0	9	12	5	▨	4	3	8	4	▨	▨	3	8	4	▨	▨	3	8	4	▨	▨
		210.0	3	8	4	▨	▨	3	8	4	▨	▨	3	8	4	▨	▨	3	8	4	▨	▨
	* 1/4"ø POWERS CALK-IN W/ 7/8" EMBEDMENT & 1/4-20 STAINLESS STEEL MACHINE SCREW (MIN. 3,000 P.S.I. CONCRETE)	48.0	12	12	12	9	12	12	12	11	6	11	12	12	10	6	10	10	12	7	4	7
		62.0	12	12	12	7	12	12	12	9	5	9	12	12	8	4	8	7	12	6	3	6
		72.0	12	12	11	6	11	12	12	7	4	7	9	12	7	4	6	7	12	6	3	6
		92.0	12	12	8	5	8	7	12	6	3	6	7	12	6	3	6	7	12	6	3	6
		210.0	7	12	6	3	6	7	12	6	3	6	7	12	6	3	6	7	12	6	3	6
	1/4"ø POWERS ZAMAC NAIL-IN W/ 1-1/8" MIN. EMBEDMENT (MIN. 3,000 P.S.I. CONCRETE)	48.0	12	12	12	5	8	12	12	9	4	5	12	12	8	3	5	5	10	5	▨	3
		62.0	12	12	10	4	6	12	12	7	3	4	7	11	6	▨	3	3	9	4	▨	3
		72.0	12	12	8	3	5	6	11	6	▨	3	4	10	5	▨	3	3	9	4	▨	3
		92.0	9	12	6	3	4	3	9	4	▨	3	3	9	4	▨	3	3	9	4	▨	3
		210.0	3	9	4	▨	3	3	9	4	▨	3	3	9	4	▨	3	3	9	4	▨	3
HOLLOW CONCRETE BLOCK	1/4"ø ITW TAPCON W/ 1-1/4" MIN. EMBEDMENT	48.0	12	12	9	4	5	11	11	6	▨	3	10	10	5	▨	3	3	6	3	▨	▨
		62.0	12	12	6	3	4	8	8	4	▨	▨	4	7	4	▨	▨	▨	5	3	▨	▨
		72.0	10	10	6	▨	3	4	7	4	▨	▨	3	6	3	▨	▨	▨	5	3	▨	▨
		92.0	6	8	4	▨	▨	▨	5	3	▨	▨	▨	5	3	▨	▨	▨	5	3	▨	▨
		210.0	▨	5	3	▨	▨	▨	5	3	▨	▨	▨	5	3	▨	▨	▨	5	3	▨	▨
	* 1/4"ø ELCO MALE/ FEMALE "PANELMATE" W/ 1-1/4 MIN. EMBEDMENT & 1/4-20 MACHINE SCREW WITH NUT	48.0	12	12	11	5	7	12	12	8	3	5	12	12	7	3	5	5	10	4	▨	3
		62.0	12	12	8	4	6	11	12	6	3	4	7	11	5	▨	3	3	8	4	▨	▨
		72.0	12	12	7	3	5	6	11	5	▨	3	4	9	4	▨	3	3	8	4	▨	▨
		92.0	9	12	5	▨	4	3	8	4	▨	▨	3	8	4	▨	▨	3	8	4	▨	▨
		210.0	3	8	4	▨	▨	3	8	4	▨	▨	3	8	4	▨	▨	3	8	4	▨	▨
	* 1/4"ø POWERS CALK-IN W/ 7/8" EMBEDMENT & 1/4-20 STAINLESS STEEL MACHINE SCREW	48.0	12	12	9	4	6	12	12	6	3	4	12	12	6	3	4	4	8	4	▨	3
		62.0	12	12	7	3	5	10	11	5	▨	3	6	10	4	▨	3	3	7	3	▨	▨
		72.0	12	12	6	3	4	5	9	4	▨	3	4	8	4	▨	▨	3	7	3	▨	▨
		92.0	8	10	5	▨	3	3	7	3	▨	▨	3	7	3	▨	▨	3	7	3	▨	▨
		210.0	3	7	3	▨	▨	3	7	3	▨	▨	3	7	3	▨	▨	3	7	3	▨	▨
	1/4"ø POWERS ZAMAC NAIL-IN W/ 1-1/8" MIN. EMBEDMENT	48.0	12	12	9	4	5	10	10	6	▨	3	9	9	6	▨	3	3	6	4	▨	▨
		62.0	11	11	7	3	4	7	8	5	▨	▨	4	7	4	▨	▨	▨	5	3	▨	▨
		72.0	10	10	6	▨	3	4	7	4	▨	▨	▨	6	4	▨	▨	▨	5	3	▨	▨
		92.0	6	8	4	▨	▨	▨	5	3	▨	▨	▨	5	3	▨	▨	▨	5	3	▨	▨
		210.0	▨	5	3	▨	▨	▨	5	3	▨	▨	▨	5	3	▨	▨	▨	5	3	▨	▨

MIN. 3" EDGE DISTANCE

EXISTING STRUCTURE	ANCHOR TYPE	LOAD (W) PSF MAX. (SEE NOTE 1)	SPANS UP TO 5'-8" (SEE NOTE 1) CONNECTION TYPE 1	2	3	4	5	SPANS UP TO 8'-0" (SEE NOTE 1) CONNECTION TYPE 1	2	3	4	5	SPANS UP TO 9'-0" (SEE NOTE 1) CONNECTION TYPE 1	2	3	4	5	SPANS UP TO 13'-1" (SEE NOTE 1) CONNECTION TYPE 1	2	3	4	5
CONCRETE	1/4"ø ITW TAPCON W/ 1-1/4" MIN. EMBEDMENT (MIN. 3,100 P.S.I. CONCRETE)	48.0	12	12	12	8	11	12	12	12	5	7	12	12	11	5	7	7	12	8	3	4
		62.0	12	12	12	6	8	12	12	10	4	6	10	12	9	4	5	4	12	7	3	4
		72.0	12	12	12	5	7	9	12	8	3	5	6	12	7	3	4	4	12	7	3	4
		92.0	12	12	9	4	5	4	12	7	3	4	4	12	7	3	4	4	12	7	3	4
		210.0	4	12	7	3	4	4	12	7	3	4	4	12	7	3	4	4	12	7	3	4
	* 1/4"ø ELCO MALE/ FEMALE "PANELMATE" W/ 1-1/4 MIN. EMBEDMENT & 1/4-20 MACHINE SCREW WITH NUT (MIN. 3,000 P.S.I. CONCRETE)	48.0	12	12	12	6	8	12	12	9	4	5	12	12	8	3	5	5	10	5	▨	3
		62.0	12	12	10	4	6	12	12	7	3	4	7	11	6	▨	4	3	9	4	▨	3
		72.0	12	12	8	4	5	6	11	6	▨	3	4	10	5	▨	3	3	9	4	▨	3
		92.0	9	12	6	3	4	3	9	4	▨	3	3	9	4	▨	3	3	9	4	▨	3
		210.0	3	9	4	▨	3	3	9	4	▨	3	3	9	4	▨	3	3	9	4	▨	3
	* 1/4"ø POWERS CALK-IN W/ 7/8" EMBEDMENT & 1/4-20 STAINLESS STEEL MACHINE SCREW (MIN. 3,000 P.S.I. CONCRETE)	48.0	12	12	12	12	12	12	12	12	9	12	12	12	12	8	12	12	12	11	6	8
		62.0	12	12	12	10	12	12	12	12	7	11	12	12	12	6	10	9	12	10	5	7
		72.0	12	12	12	9	12	12	12	12	6	9	12	12	11	5	8	9	12	10	5	7
		92.0	12	12	12	7	10	9	12	10	5	7	9	12	10	5	7	9	12	10	5	7
		210.0	9	12	10	5	7	9	12	10	5	7	9	12	10	5	7	9	12	10	5	7
	1/4"ø POWERS ZAMAC NAIL-IN W/ 1-1/8" MIN. EMBEDMENT (MIN. 3,000 P.S.I. CONCRETE)	48.0	12	12	12	7	9	12	12	11	4	6	12	12	10	4	5	5	11	6	3	3
		62.0	12	12	12	5	7	12	12	8	3	5	8	12	7	3	4	3	10	5	▨	3
		72.0	12	12	10	4	6	7	12	7	3	4	5	11	6	▨	3	3	10	5	▨	3
		92.0	10	12	8	3	4	3	10	5	▨	3	3	10	5	▨	3	3	10	5	▨	3
		210.0	3	10	5	▨	3	3	10	5	▨	3	3	10	5	▨	3	3	10	5	▨	3
HOLLOW CONCRETE BLOCK	1/4"ø ITW TAPCON W/ 1-1/4" MIN. EMBEDMENT	48.0	12	12	11	4	6	12	12	7	3	4	11	11	6	▨	3	3	7	4	▨	▨
		62.0	12	12	8	3	4	9	9	6	▨	3	5	8	5	▨	▨	▨	6	4	▨	▨
		72.0	12	12	7	3	4	4	8	5	▨	▨	3	7	4	▨	▨	▨	6	4	▨	▨
		92.0	7	9	5	▨	3	▨	6	4	▨	▨	▨	6	4	▨	▨	▨	6	4	▨	▨
		210.0	▨	6	4	▨	▨	▨	6	4	▨	▨	▨	6	4	▨	▨	▨	6	4	▨	▨
	* 1/4"ø ELCO MALE/ FEMALE "PANELMATE" W/ 1-1/4 MIN. EMBEDMENT & 1/4-20 MACHINE SCREW WITH NUT	48.0	12	12	12	6	8	12	12	9	4	5	12	12	8	3	5	5	10	5	▨	3
		62.0	12	12	10	4	6	12	12	7	3	4	7	11	6	▨	4	3	9	4	▨	3
		72.0	12	12	8	4	5	6	11	6	▨	3	4	10	5	▨	3	3	9	4	▨	3
		92.0	9	12	6	3	4	3	9	4	▨	3	3	9	4	▨	3	3	9	4	▨	3
		210.0	3	9	4	▨	3	3	9	4	▨	3	3	9	4	▨	3	3	9	4	▨	3
	* 1/4"ø POWERS CALK-IN W/ 7/8" EMBEDMENT & 1/4-20 STAINLESS STEEL MACHINE SCREW	48.0	12	12	12	6	8	12	12	10	4	6	12	12	9	4	5	5	11	6	▨	3
		62.0	12	12	11	5	6	12	12	8	3	4	7	12	7	3	4	3	9	5	▨	3
		72.0	12	12	10	4	5	7	12	7	3	4	5	10	6	▨	3	3	9	5	▨	3
		92.0	10	12	7	3	4	3	9	5	▨	3	3	9	5	▨	3	3	9	5	▨	3
		210.0	3	9	5	▨	3	3	9	5	▨	3	3	9	5	▨	3	3	9	5	▨	3
	1/4"ø POWERS ZAMAC NAIL-IN W/ 1-1/8" MIN. EMBEDMENT	48.0	12	12	11	4	5	12	12	8	3	4	10	10	7	▨	3	3	7	4	▨	▨
		62.0	12	12	8	3	4	8	9	6	▨	3	5	8	5	▨	▨	▨	6	4	▨	▨
		72.0	11	11	7	3	3	4	8	5	▨	▨	3	7	4	▨	▨	▨	6	4	▨	▨
		92.0	6	9	6	▨	3	▨	6	4	▨	▨	▨	6	4	▨	▨	▨	6	4	▨	▨
		210.0	▨	6	4	▨	▨	▨	6	4	▨	▨	▨	6	4	▨	▨	▨	6	4	▨	▨

ANCHOR SCHEDULE

FASTENER MAXIMUM SPACING (INCHES) REQUIRED FOR VARIDUS DESIGN LOADS AND SPANS

MIN. 3/4" EDGE DISTANCE

EXISTING STRUCTURE	ANCHOR TYPE	LOAD (W) PSF MAX. (SEE NOTE 1)	SPANS UP TO 5'-8" (SEE NOTE 1) CONNECTION TYPE 1	2	3	4	5	SPANS UP TO 8'-0" (SEE NOTE 1) CONNECTION TYPE 1	2	3	4	5	SPANS UP TO 9'-0" (SEE NOTE 1) CONNECTION TYPE 1	2	3	4	5	SPANS UP TO 13'-1" (SEE NOTE 1) CONNECTION TYPE 1	2	3	4	5
WOOD	1/4"ø WOOD LAG W/ 1-3/4" MIN. THREAD PENETRATION SHEAR PARALLEL OR PERP. TO WOOD GRAIN	48.0	12	12	11	7	12	12	12	8	5	11	12	12	7	4	10	10	12	4	3	7
		62.0	12	12	8	5	12	12	12	6	4	8	12	12	5	3	7	7	12	4	▨	6
		72.0	12	12	7	5	10	12	12	5	3	7	9	12	4	3	6	7	12	4	▨	6
		92.0	12	12	5	3	8	7	12	4	▨	6	7	12	4	▨	6	7	12	4	▨	6
		210.0	7	12	4	▨	6	7	12	4	▨	6	7	12	4	▨	6	7	12	4	▨	6

ANCHOR NOTES:

1. SPANS AND LOADS SHOWN HERE ARE FOR DETERMINING ANCHOR SPACING ONLY. ALLOWABLE STORM SHUTTER SPANS FOR SPECIFIC LOADS MUST BE LIMITED TO THOSE SHOWN IN TABLE 1, SHEET 5.
2. ENTER ANCHOR SCHEDULE BASED ON THE EXISTING STRUCTURE MATERIAL, ANCHOR TYPE AND EDGE DISTANCE. SELECT DESIGN LOAD GREATER THAN OR EQUAL TO NEGATIVE DESIGN LOAD ON SHUTTER AND SELECT SPAN GREATER THAN OR EQUAL TO SHUTTER SPAN.
3. EXISTING STRUCTURE MAY BE CONCRETE, HOLLOW BLOCK OR WOOD FRAMING. REFERENCE ANCHOR SCHEDULE FOR PROPER ANCHOR TYPE BASED ON TYPE OF EXISTING STRUCTURE AND APPROPRIATE CONNECTION TYPE. SEE MOUNTING SECTION DETAILS FOR IDENTIFICATION OF CONNECTION TYPE.
4. ANCHORS SHALL BE INSTALLED IN ACCORDANCE WITH MANUFACTURERS' RECOMMENDATIONS.
5. MINIMUM EMBEDMENT AND EDGE DISTANCE EXCLUDES WALL FINISH OR STUCCO.
6. WHERE EXISTING STRUCTURE IS WOOD FRAMING, WOOD FRAMING CONDITIONS VARY. FIELD VERIFY THAT FASTENERS ARE INTO ADEQUATE WOOD FRAMING MEMBERS, NOT PLYWOOD. FASTENING TO PLYWOOD IS ACCEPTABLE ONLY FOR SIDE CLOSURE PIECES.
7. WHERE LAG SCREWS FASTEN TO NARROW FACE OF STUD FRAMING, FASTENER SHALL BE LOCATED IN CENTER OF NOMINAL 2" x 4" (MIN.) WOOD STUD. 3/4" EDGE DISTANCE IS ACCEPTABLE FOR WOOD FRAMING. WOOD STUD SHALL BE "SOUTHERN PINE" G=0.55 OR GREATER DENSITY. LAG SCREWS SHALL HAVE PHILLIPS PAN HEAD OR HEX HEAD.
8. MACHINE SCREWS SHALL HAVE MINIMUM OF 1/2" ENGAGEMENT OF THREADS IN BASE ANCHOR AND MAY HAVE EITHER A PAN HEAD, TRUSS HEAD, OR WAFER HEAD (SIDEWALK BOLT), U.O.N.
9. ▨ DESIGNATES ANCHOR CONDITIONS WHICH ARE NOT ACCEPTABLE USES.
10. * DESIGNATES ANCHORS WHICH ARE REMOVABLE BY REMOVING MACHINE SCREW, NUT OR WASHERED WINGNUT.
11. FOR BUILD-OUT MOUNT SECTION (D) ANCHOR SPACING SHALL NOT EXCEED 8-1/2" O.C.
12. FOR BUILD-OUT MOUNT SECTION (E) ANCHOR SPACING SHALL NOT EXCEED 6" O.C.

Approved as complying with the Florida Building Code
Date 05/01/2002
NOA# 02-0419.10
Miami Dade Product Control Division
By [signature]

KNEZEVICH & ASSOCIATES, INC.
CONSULTING ENGINEERS • PRODUCT TESTING
1260 N. UNIVERSITY DRIVE, SUITE 180 • FORT LAUDERDALE, FL 33322
TEL: (954) 382-2800 • FAX: (954) 382-2989 • FLORIDA COA #3205
WEBSITE: WWW.KNEZEVICH.COM • E-MAIL: KA@KNEZEVICH.COM
COPYRIGHT © 2002 KNEZEVICH & ASSOCIATES, INC.
HT100 LICENSED BY HI-TECH SHUTTER GROUP, INC.

RobiCordions ™
Manufacturers of Precision Storm Protection
ROBICO SHUTTERS, INC. ™
4800 S.W. 51st Street
Davie, FL 33314-5537
Tel. (954) 689-7545
Fax (954) 689-8797

V.J. KNEZEVICH
PROFESSIONAL ENGINEER
FL License No: PE 0010983
APR 17 2002

revisions no	date	by	description
1	08/08/96		NEW TEST DATA ADDED
2	10/10/96		COUNTY COMMENTS
3	11/26/97	JWK	REVISE FASTENERS
4	01/14/98	JWK	FASTENER NOTES
5	04/30/98	JWK	SLAT 2/REV.2,4 DESC.
6	06/10/99	VJK	CENTER MATES/FASTENERS

HTSG I.D. # 0417029616BD

date 07/23/1996
scale AS NOTED | drawn by MCR
design by VJK | checked by VJK
drawing no. 02-619
sheet 6 of 6