MIAMI-DADE

BUILDING CODE COMPLIANCE OFFICE (BCCO)
PRODUCT CONTROL DIVISION

MIAMI-DADE COUNTY, FLORIDA
METRO-DADE FLAGLER BUILDING
140 WEST FLAGLER STREET, SUITE 1603
MIAMI, FLORIDA 33130-1563
(305) 375-2901 FAX (305) 375-2908

# NOTICE OF ACCEPTANCE (NOA)

**Shutter Guard**
**10601 Oak Street N.E.**
**St. Petersburg, FL 33716**

**SCOPE:**

This NOA is being issued under the applicable rules and regulations governing the use of construction materials. The documentation submitted has been reviewed by Miami-Dade County Product Control Division and accepted by the Board of Rules and Appeals (BORA) to be used in Miami Dade County and other areas where allowed by the Authority Having Jurisdiction (AHJ).

This NOA shall not be valid after the expiration date stated below. The Miami-Dade County Product Control Division (In Miami Dade County) and/or the AHJ (in areas other than Miami Dade County) reserve the right to have this product or material tested for quality assurance purposes. If this product or material fails to perform in the accepted manner, the manufacturer will incur the expense of such testing and the AHJ may immediately revoke, modify, or suspend the use of such product or material within their jurisdiction. BORA reserves the right to revoke this acceptance, if it is determined by Miami-Dade County Product Control Division that this product or material fails to meet the requirements of the applicable building code.

This product is approved as described herein, and has been designed to comply with the High Velocity Hurricane Zone of the Florida Building Code.

**DESCRIPTION: Extruded Aluminum Roll-Up Shutter**

**APPROVAL DOCUMENT:** Drawing No.96-283, titled "Roll-Shutter", sheets 1 through 12 of 12, prepared, signed sealed by Walter A. Tillit Jr., P.E., dated 09/09/96, bearing the Miami-Dade County Product Control Approval stamp with the Notice of Acceptance number and approval date by the Miami-Dade County Product Control Division.

**MISSILE IMPACT RATING: Large and Small Missile Impact**

**LABELING:** Each unit shall bear a permanent label with the manufacturer's name or logo, city, state and following statement: "Miami-Dade County Product Control Approved", unless otherwise noted herein.

**RENEWAL** of this NOA shall be considered after a renewal application has been filed and there has been no change in the applicable building code negatively affecting the performance of this product.

**TERMINATION** of this NOA will occur after the expiration date or if there has been a revision or change in the materials, use, and/or manufacture of the product or process. Misuse of this NOA as an endorsement of any product, for sales, advertising or any other purposes shall automatically terminate this NOA. Failure to comply with any section of this NOA shall be cause for termination and removal of NOA.

**ADVERTISEMENT:** The NOA number preceded by the words Miami-Dade County, Florida, and followed by the expiration date may be displayed in advertising literature. If any portion of the NOA is displayed, then it shall be done in its entirety.

**INSPECTION:** A copy of this entire NOA shall be provided to the user by the manufacturer or its distributors and shall be available for inspection at the job site at the request of the Building Official.

This NOA **revises NOA #00-1121.05** and, consists of this page 1 as well as approval document mentioned above. The submitted documentation was reviewed by **Raul Rodriguez.**

PRODUCT CONTROL ACCEPTED

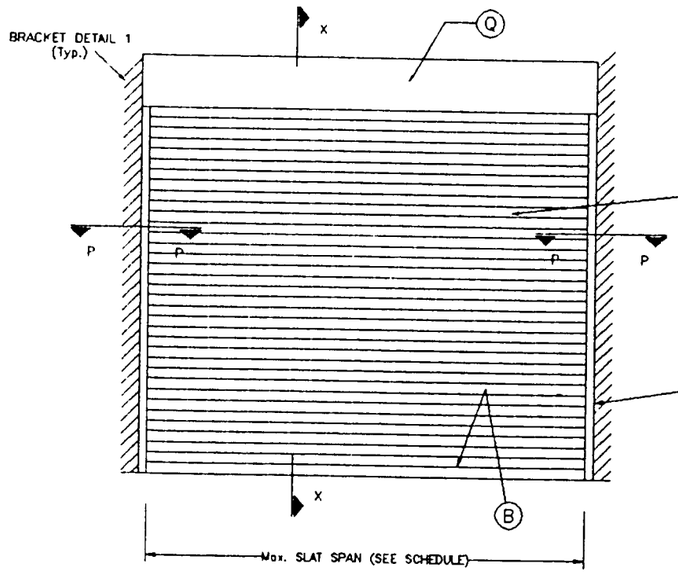


TYPICAL SINGLE UNIT ELEVATION (NO STORM BARS REQUIRED)

NOTE: SEE SHEET 2 & 3 OF 12 FOR COMPONENTS NOMENCLATURE.
SEE SECTIONS ON SHEETS 4, 5, 6, 7 & 8 OF 12.

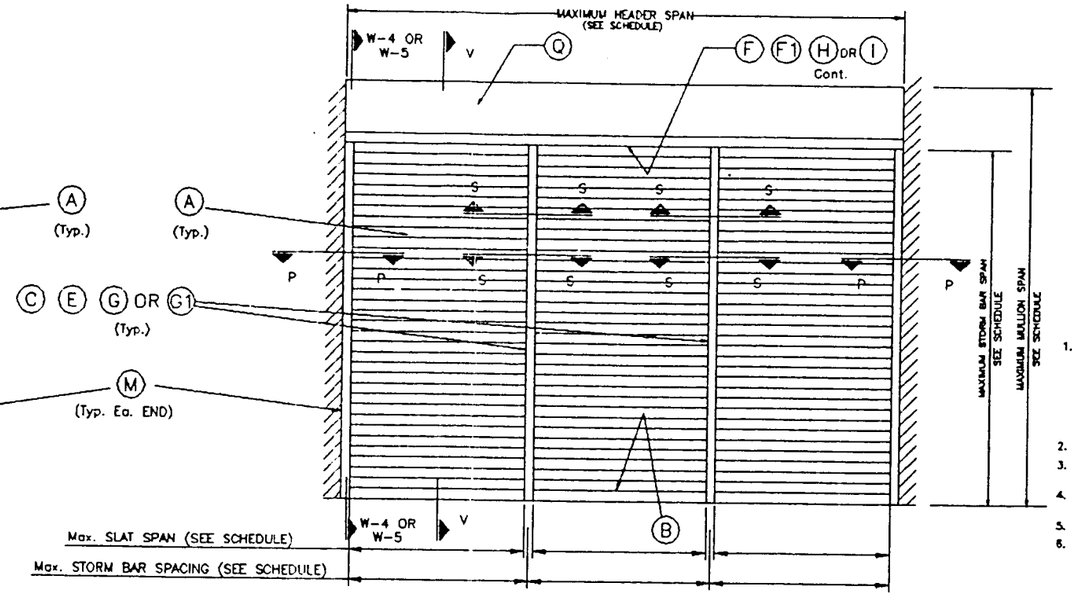


TYPICAL MULTIPLE UNIT ELEVATION (STORM BARS REQUIRED)

NOTE: SEE SHEET 2 & 3 OF 12 FOR COMPONENTS NOMENCLATURE.
SEE SECTIONS ON SHEETS 4, 5, 6, 7 & 8 OF 12.

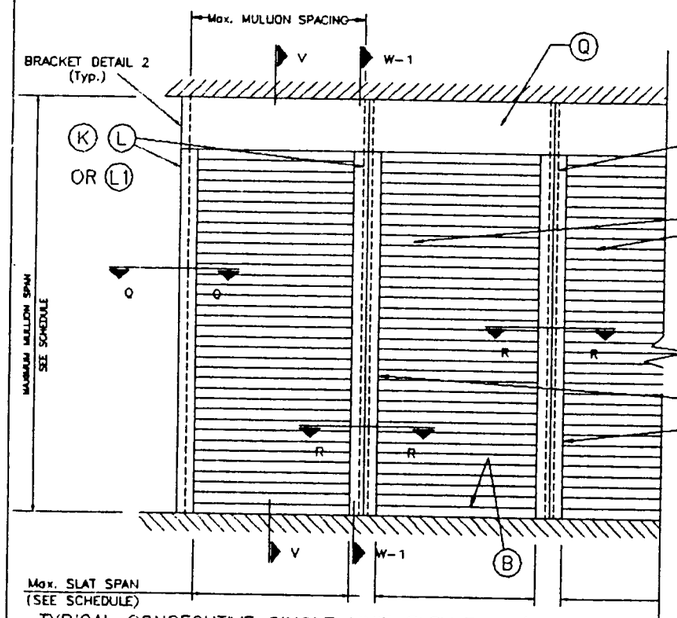


TYPICAL CONSECUTIVE SINGLE UNIT ELEVATION (NO STORM BARS REQUIRED)

NOTE: SEE SHEET 2 & 3 OF 12 FOR COMPONENTS NOMENCLATURE.
SEE SECTIONS ON SHEETS 4, 5, 6, 7 & 8 OF 12.

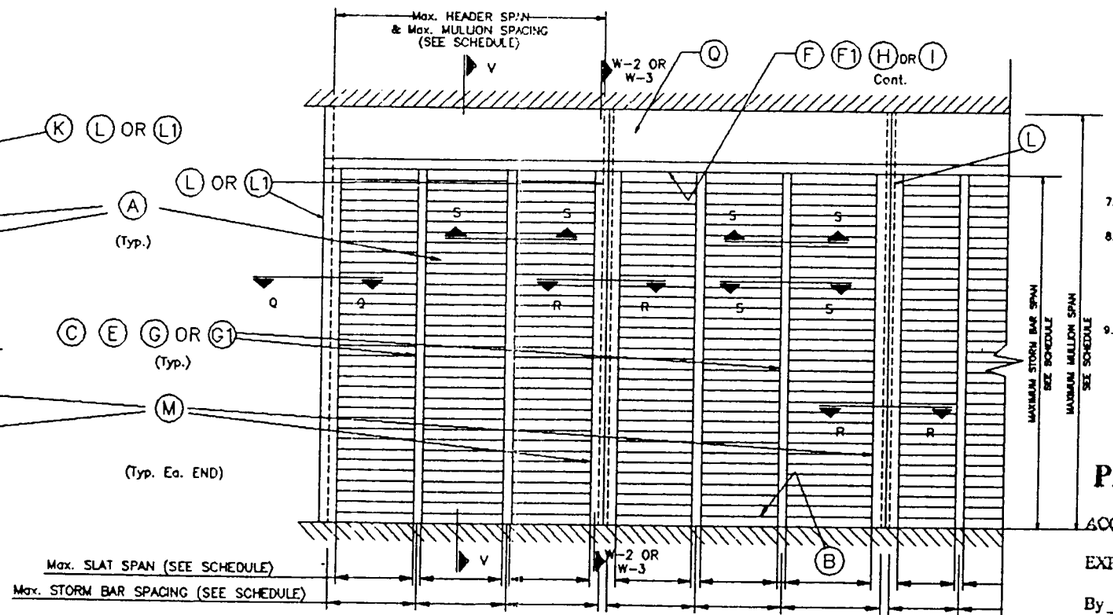


TYPICAL CONSECUTIVE MULTIPLE UNIT ELEVATION (STORM BARS REQUIRED)

NOTE: SEE SHEET 2 & 3 OF 12 FOR COMPONENTS NOMENCLATURE.
SEE SECTIONS ON SHEETS 4, 5, 6, 7 & 8 OF 12.

**PRODUCT REVISED**
**as complying with the Florida Building Code**
**Acceptance No.** 02-0426.03
**Expiration Date** 02/19/06
**By**
**Miami Dade Product Control Division**

GENERAL NOTES:

1. ROLL-UP SHUTTER HAS BEEN DESIGNED IN ACCORDANCE WITH THE DADE COUNTY, 1994 EDITION OF THE SOUTH FLORIDA BUILDING CODE.
   WIND VELOCITY CONSIDERED IS 110 m.p.h. IMPORTANCE FACTOR IS 1.05.
   COASTAL ZONE WIND LOADS DETERMINED FOR EXPOSURE "D" FOR BUILDINGS WITH ROOF HEIGHT OVER 60'-0" ONLY, AND FOR EXPOSURE "C" FOR BUILDINGS WITH MEAN ROOF HEIGHT EQUAL OR LESS THAN 60'-0". NON COASTAL ZONE WIND LOADS DETERMINED FOR EXPOSURE "C", AS REQUIRED BY ASCE 7-88.
   ROLL-UP SHUTTER'S ADEQUACY FOR IMPACT AND FATIGUE RESISTANCE HAS BEEN VERIFIED IN ACCORDANCE WITH SECTIONS 2315 & 2314 RESPECTIVELY OF THE ABOVE MENTIONED CODE.
2. ALL ALUMINUM EXTRUSIONS SHALL BE 6063-T6 ALLOY (UNLESS OTHERWISE NOTED).
3. ALL SCREWS TO BE STAINLESS STEEL 304 OR 318 SERIES W/50 ksi YIELD POINT AND 90 ksi TENSILE STRENGTH.
4. BOLTS TO BE 2024-T4 ALUMINUM ALLOY, GALVANIZED OR STAINLESS STEEL WITH 36 ksi MINIMUM YIELD POINT.
5. STORM BARS SHALL REMAIN IN PLACE AT ALL TIMES.
6. ANCHORS TO WALL SHALL BE AS FOLLOWS: (UNLESS OTHERWISE NOTED)
   (A) TO EXISTING POURED CONCRETE:
   - 1/4" ø TAPCON ANCHORS OR RAWL PERMA-SEAL OR S. S. TAPPER CONCRETE ANCHORS, AS MANUFACTURED BY I.T.W./RAWSET, ELCO INDUSTRIES OR THE RAWL PLUG CO., INC, RESPECTIVELY.

   NOTES:
   A.1) MINIMUM EMBEDMENT OF CONCRETE ANCHORS INTO THE CONCRETE UNIT SHALL BE 1 1/2". NO EMBEDMENT INTO STUCCO SHALL BE CONSIDERED AS PART OF THE REQUIRED EMBEDMENT.
   A.2) IN CASE THAT PRECAST STONE, PRECAST CONCRETE PANELS, OR PAVERS BE FOUND ON THE EXISTING WALL OR FLOOR, ANCHORS SHALL BE LONG ENOUGH TO REACH THE MAIN STRUCTURE BEHIND SUCH PANELS. ANCHORAGE SHALL BE 1 1/2" MINIMUM.

   (B) TO EXISTING CONCRETE BLOCK WALL:
   - 1/4" ø TAPCON ANCHORS, AS MANUFACTURED BY I.T.W./RAWSET OR ELCO INDUSTRIES.

   NOTES:
   B.1) MINIMUM EMBEDMENT OF TAPCON ANCHORS, INTO THE CONCRETE BLOCK UNIT SHALL BE 1 1/4".
   B.2) IN CASE THAT PRECAST STONE OR PRECAST CONCRETE PANELS BE FOUND ON THE EXISTING WALL, ANCHORS SHALL BE LONG ENOUGH TO REACH THE MAIN STRUCTURE BEHIND SUCH PANELS. ANCHORAGE SHALL BE 1 1/4" MINIMUM.

   (C) ANCHORS SHALL BE INSTALLED FOLLOWING ALL OF THE RECOMENDATIONS AND SPECIFICATIONS OF THE ANCHOR'S MANUFACTURER.
   (D) ANCHORAGE TO WOOD FRAME BUILDINGS HAS NOT COVERED IN THIS DRAWING & SHALL BE ENGINEERED ON A JOB BY JOB BASIS.
7. IT SHALL BE THE RESPONSIBILITY OF THE CONTRACTOR TO VERIFY THE SOUNDNESS OF THE STRUCTURE WHERE SHUTTER IS TO BE ATTACHED TO INSURE PROPER ANCHORAGE.
8. SHUTTER MANUFACTURER'S STAMP SHALL BE PLACED ON THE EXPOSED SURFACE OF THE SIDE RAIL APROXIMATELY 4" ABOVE THE BOTTOM OF SUCH RAIL. STAMP SHALL READ AS FOLLOWS:
   ROLL-UP SHUTTER
   SHUTTER GUARD
   ST. PETERSBURG, FLORIDA
   DADE COUNTY PRODUCT CONTROL APPROVED.
9. ROLL-UP MECHANISM NOT PART OF THIS APPROVAL.

**PRODUCT RENEWED**
ACCEPTANCE No. 00-1121.05
EXPIRATION DATE 02/19/2005
By
PRODUCT CONTROL DIVISION
BUILDING CODE COMPLIANCE OFFICE

**PRODUCT RENEWED**
ACCEPTANCE No. 98-0113.04
EXPIRATION DATE FEBRUARY 19, 2001
By
PRODUCT CONTROL DIVISION
BUILDING CODE COMPLIANCE OFFICE

APPROVED AS COMPLYING WITH THE SOUTH FLORIDA BUILDING CODE
DATE OCTOBER 10 1996
BY
PRODUCT CONTROL DIVISION
BUILDING CODE COMPLIANCE OFFICE
ACCEPTANCE NO. 96-0913.02

DADE COUNTY

Walter A. Tillit
9/10/96


TILTECO INC.
TILLIT TESTING & ENGINEERING COMPANY
8505 N.W. 38th St., Ste 217, VIRGINIA GARDENS, Fl. 33166
Phone : (305)871-1530 . Fax : (305)871-1531
WALTER A. TILLIT Jr., P. E.
FLORIDA Lic. # 44167


ROLL-UP SHUTTER

SHUTTER GUARD
10601 OAK STREET N. E
ST. PETERSBURG, FLORIDA 33716

| REV. No | DESCRIPTION | DATE | REV. No | DESCRIPTION | DATE |
|---|---|---|---|---|---|
| 1 | - | - | 3 | | |
| 2 | | | 4 | | |

SCALE -
DATE 9/9/96
DRAWING No 96 - 283
SHEET 1 OF 12

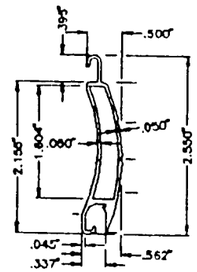

(A) TYPE 1 SLAT:
EXTRUDED ALUMINUM SLAT US 60
6063-T6 ALUMINUM ALLOY

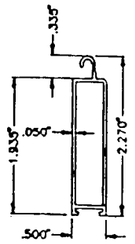

(B) TYPE 2 SLAT:
EXTRUDED ALUMINUM BOTTOM SLAT
6063-T6 ALUMINUM ALLOY

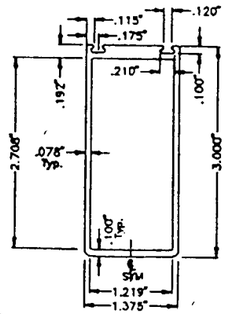

(C) TYPE 1 STORM BAR:
3" EXTRUDED STORM BAR
6061-T6 OR 6005-T5 ALUMINUM ALLOY

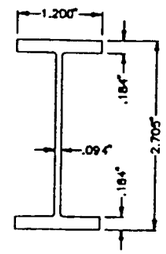

(D) INSERT FOR 1 3/8" x 3" STORM BAR
6005-T5 ALUMINUM ALLOY

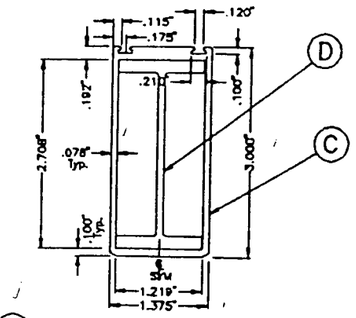

(E) TYPE 2 STORM BAR:
3" EXTRUDED STORM BAR W/ INSERT
6061-T6/6005-T6 ALUMINUM ALLOY (STORM BAR)
6005-T5 ALUMINUM ALLOY (INSERT)

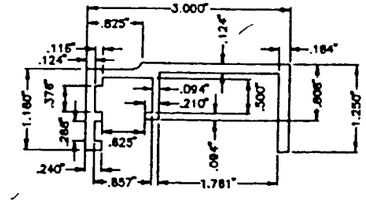

(F) TYPE 1 HEADER CHANNEL
6005-T5 ALUMINUM ALLOY

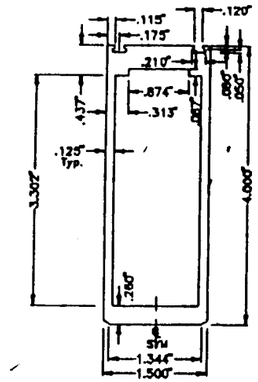

(G) TYPE 3 STORM BAR
4" HEAVY EXTRUDED STORM BAR
6061-T6 OR 6005-T6 ALUMINUM ALLOY

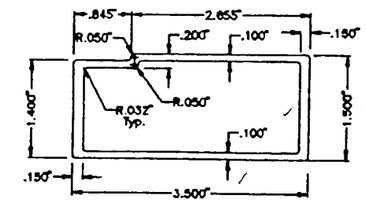

(F1) TYPE 1A HEADER TUBE
6005-T5 ALUMINUM ALLOY

**PRODUCT RENEWED**
ACCEPTANCE No. 00-1121.05
EXPIRATION DATE 02/19/2006
By Manuel Perez
PRODUCT CONTROL DIVISION
BUILDING CODE COMPLIANCE OFFICE

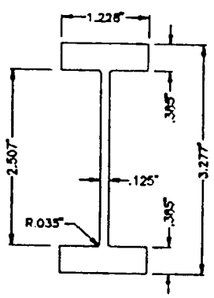

(D1) INSERT FOR 1 1/2" x 4" STORM BAR
6005-T5 ALUMINUM ALLOY

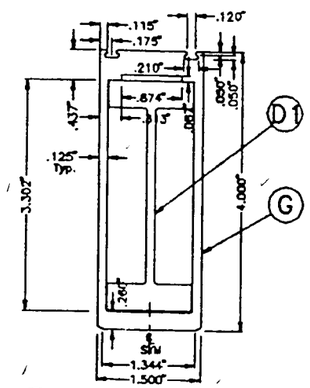

(G1) TYPE 4 STORM BAR
4" HEAVY EXTRUDED STORM BAR W/ INSERT
6061-T6 OR 6005-T6 ALUMINUM ALLOY

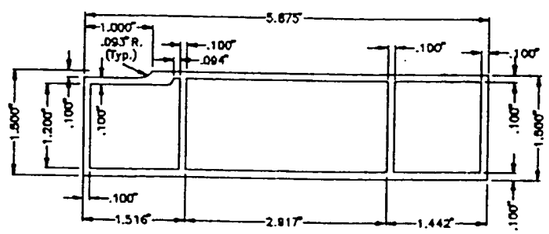

(H) TYPE 2 HEADER TUBE
6005-T5 ALUMINUM ALLOY

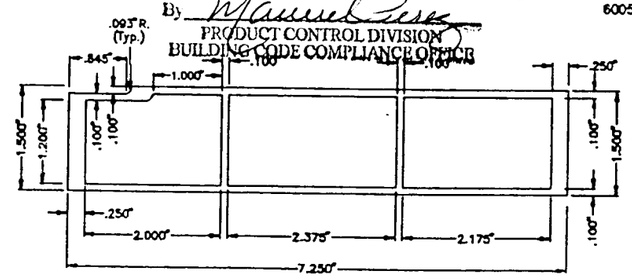

(I) TYPE 3 HEADER TUBE
6005-T5 ALUMINUM ALLOY

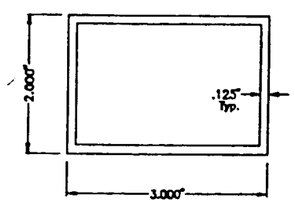

(J) BUILT OUT TUBE
6005-T5 ALUMINUM ALLOY

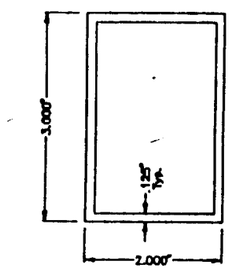

(K) TYPE 1 MULLION
6005-T5 ALUMINUM ALLOY

**PRODUCT REVISED**
as complying with the Florida Building Code
Acceptance No. 02-0426.03
Expiration Date 02/19/2006
By
Miami-Dade Product Control Division

**PRODUCT RENEWED**
ACCEPTANCE No. 98-0113.04
EXPIRATION DATE FEBRUARY 19, 2001
By Manuel Perez
PRODUCT CONTROL DIVISION
BUILDING CODE COMPLIANCE OFFICE

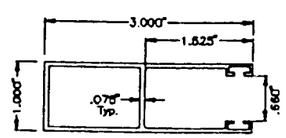

(M) TYPE 1 SIDE RAIL
6063-T6 Alum. ALLOY

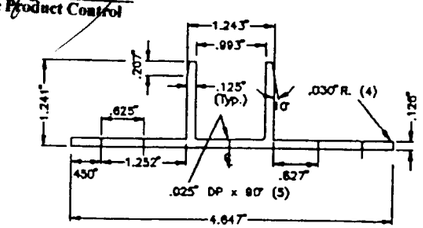

(O) TYPE 3 STORM BAR BRACKET
6061-T6 OR 6005-T5 ALUMINUM ALLOY

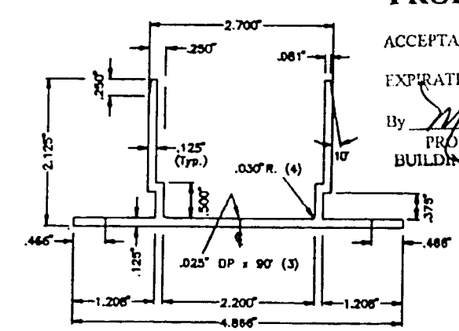

(P) MULLION BRACKET
6061-T6 OR 6005-T5 ALUMINUM ALLOY

APPROVED AS COMPLYING WITH THE SOUTH FLORIDA BUILDING CODE
DATE OCTOBER 10 1996
BY Manuel Perez
PRODUCT CONTROL DIVISION
BUILDING CODE COMPLIANCE OFFICE
ACCEPTANCE NO. 96-0913.02

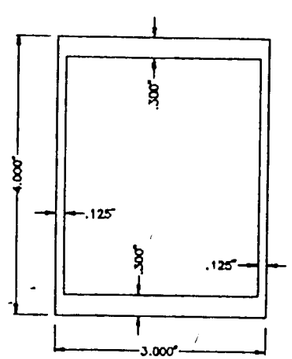

(L) TYPE 2 MULLION
6005-T5 ALUMINUM ALLOY

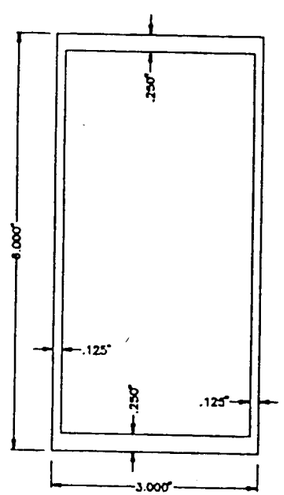

(L1) TYPE 3 MULLION
6061-T6 OR 6005-T5 ALUMINUM ALLOY

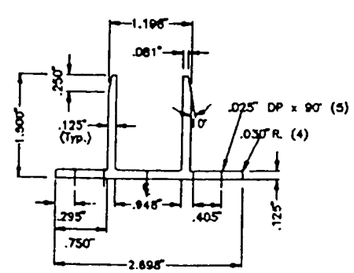

(N) TYPE 1 & 2 STORM BAR BRACKETS
6061-T6 OR 6005-T5 ALUMINUM ALLOY

Walter A. Tillit Jr.
9/10/96

DADE COUNTY

TILTECO INC.
TILLIT TESTING & ENGINEERING COMPANY
8595 N.W. 38th. St., Ste. 217, VIRGINIA GARDENS, FL 33166
Phone : (305)871-1530 . Fax : (305)871-1531
WALTER A. TILLIT Jr., P. E.
FLORIDA Lic. # 44167

ROLL-UP SHUTTER

SHUTTER GUARD
10801 OAK STREET N. E.
ST. PETERSBURG, FLORIDA 33716

| SCALE | - |
|---|---|
| DATE | 9/9/96 |
| DRAWING No | 96 - 283 |
| SHEET 2 OF 12 | |

| REV. No | DESCRIPTION | DATE | REV. No | DESCRIPTION | DATE |
|---|---|---|---|---|---|
| 1 | - | - | 3 | | |

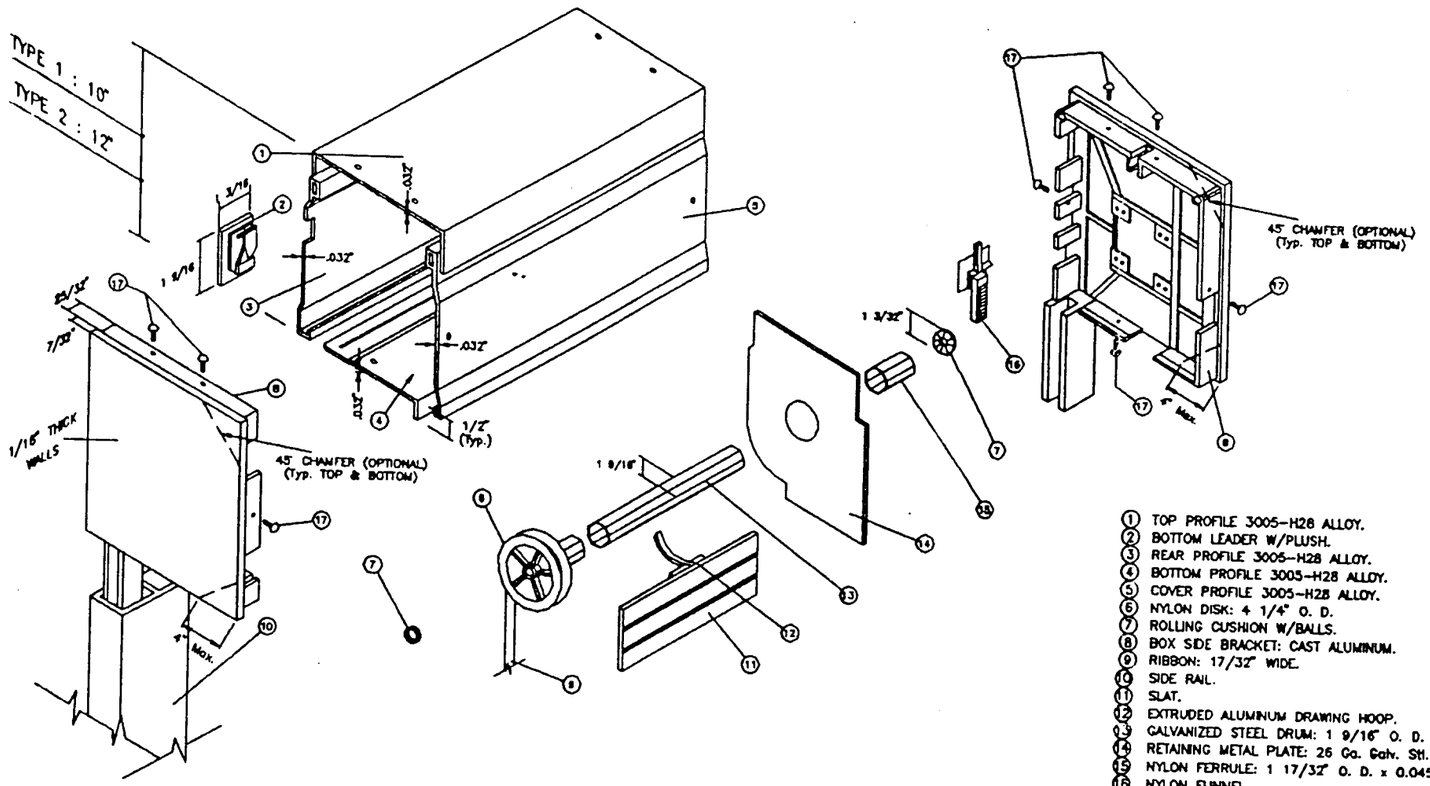


Q BOX COMPONENTS AND ASSEMBLY DETAIL




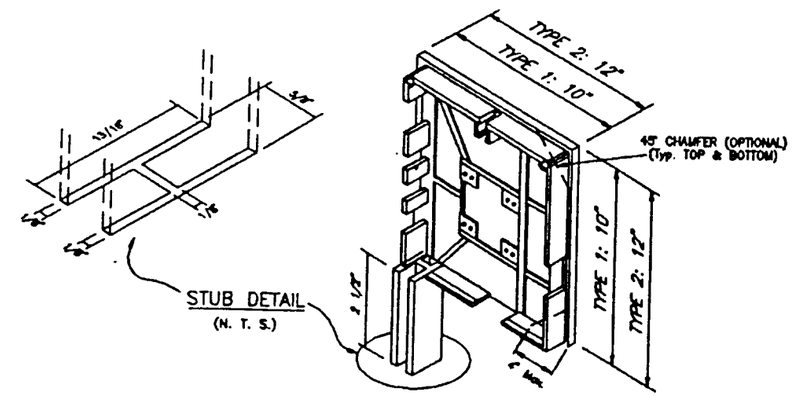


1. TOP PROFILE 3005-H28 ALLOY.
2. BOTTOM LEADER W/PLUSH.
3. REAR PROFILE 3005-H28 ALLOY.
4. BOTTOM PROFILE 3005-H28 ALLOY.
5. COVER PROFILE 3005-H28 ALLOY.
6. NYLON DISK: 4 1/4" O. D.
7. ROLLING CUSHION W/BALLS.
8. BOX SIDE BRACKET: CAST ALUMINUM.
9. RIBBON: 17/32" WIDE.
10. SIDE RAIL.
11. SLAT.
12. EXTRUDED ALUMINUM DRAWING HOOP.
13. GALVANIZED STEEL DRUM: 1 9/16" O. D. x 0.032" Thk.
14. RETAINING METAL PLATE: 26 Ga. Galv. Stl. AT EACH END.
15. NYLON FERRULE: 1 17/32" O. D. x 0.045" Thk. x 3 5/16" Long.
16. NYLON FUNNEL.
17. SCREWS: # 4 x 1/2" S. S.

R BOX SIDE BRACKET TYPES

PRODUCT REVISED
as complying with the Florida Building Code
Acceptance No. 02-0426.03
Expiration Date 02/19/06
By [signature]
Miami Dade Product Control Division

**PRODUCT RENEWED**
ACCEPTANCE No. 98-0113.04
EXPIRATION DATE FEBRUARY 19, 2001
By [signature]
PRODUCT CONTROL DIVISION
BUILDING CODE COMPLIANCE OFFICE

**PRODUCT RENEWED**
ACCEPTANCE No. 00-1121.05
EXPIRATION DATE 02/19/2006
By [signature]
PRODUCT CONTROL DIVISION
BUILDING CODE COMPLIANCE OFFICE

APPROVED AS COMPLYING WITH THE SOUTH FLORIDA BUILDING CODE
DATE OCTOBER 10 1996
BY [signature]
PRODUCT CONTROL DIVISION
BUILDING CODE COMPLIANCE OFFICE
ACCEPTANCE NO. 96-0913.02

DADE COUNTY

TILTECO INC.
TILLIT TESTING & ENGINEERING COMPANY
6595 N.W. 36th St., Ste. 217, VIRGINIA GARDENS, FL 33166
Phone : (305)871-1530 . Fax : (305)871-1531
WALTER A. TILLIT Jr., P. E.

ROLL-UP SHUTTER

SHUTTER GUARD
10601 OAK STREET N. E.
ST. PETERSBURG, FLORIDA 33716

| REV. No | DESCRIPTION | DATE | REV. No | DESCRIPTION | DATE |
|---|---|---|---|---|---|
| 1 | - | - | 3 | | |

SCALE -
DATE 9/9/96
DRAWING No 96 - 283

[signature]
9/19/96

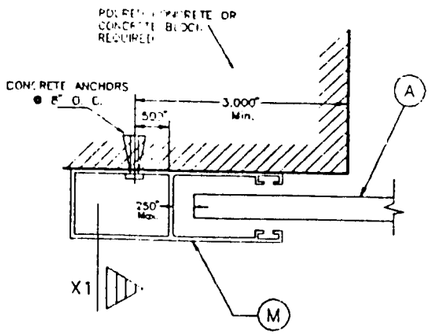


SECTION P – P (1) : WALL MOUNT

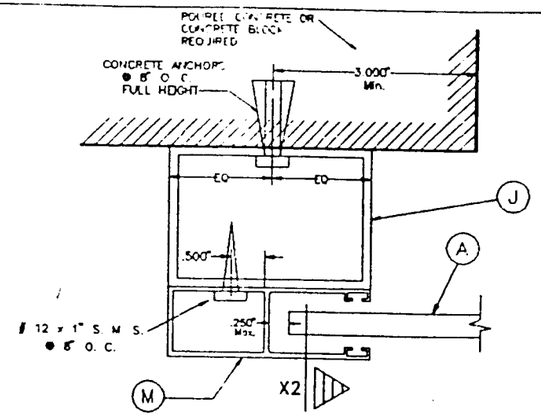


SECTION P – P (2) : BUILD-OUT

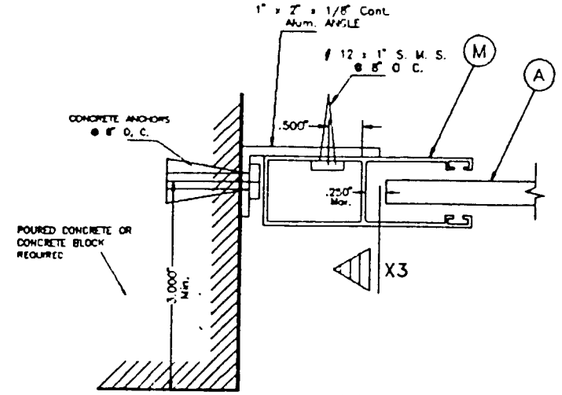


SECTION P – P (3) : SIDE WALL MOUNT

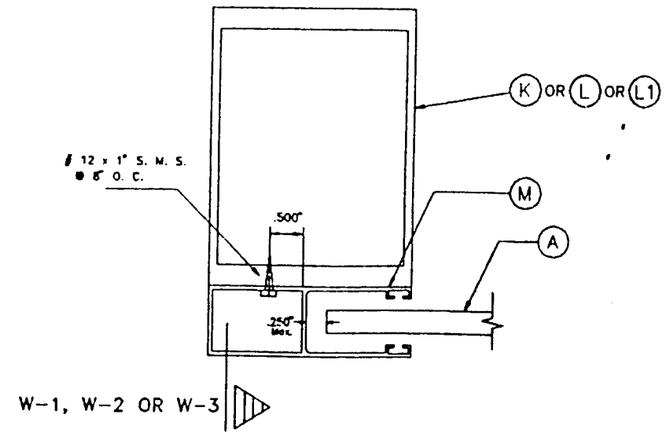


SECTION Q – Q : MULLION MOUNT

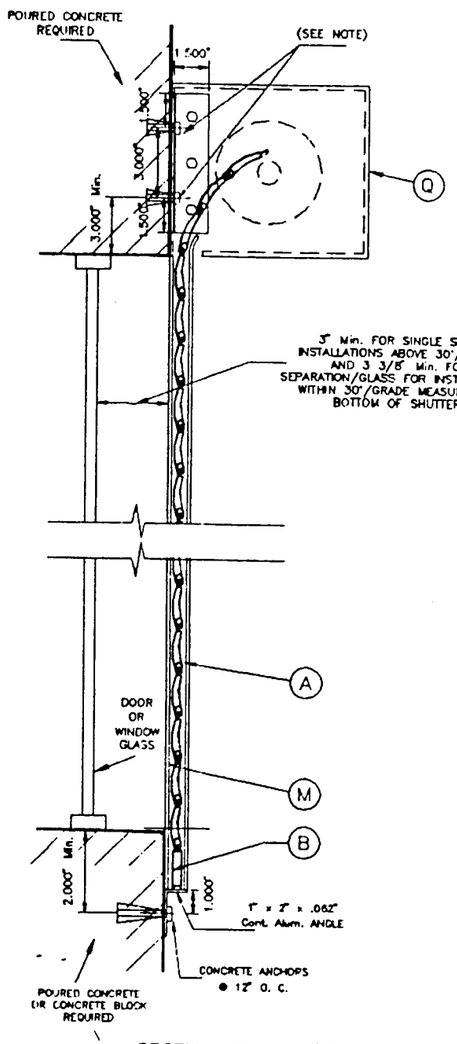


SECTION X – X (1)

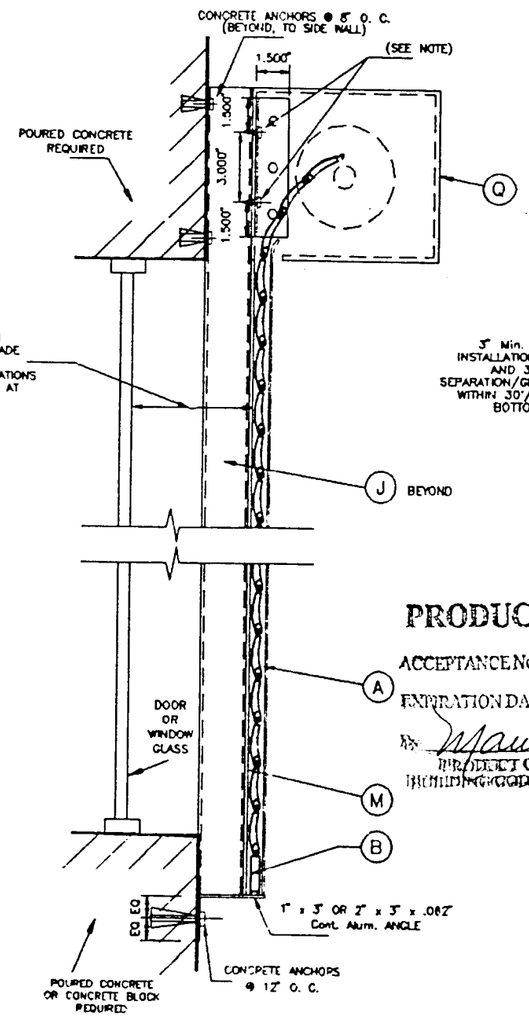


SECTION X – X (2)

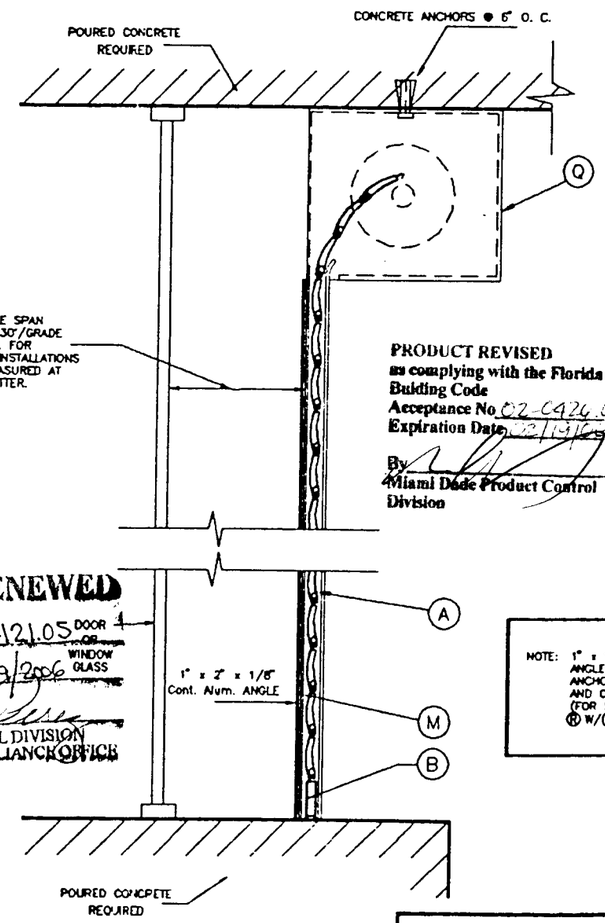


SECTION X –X (3)

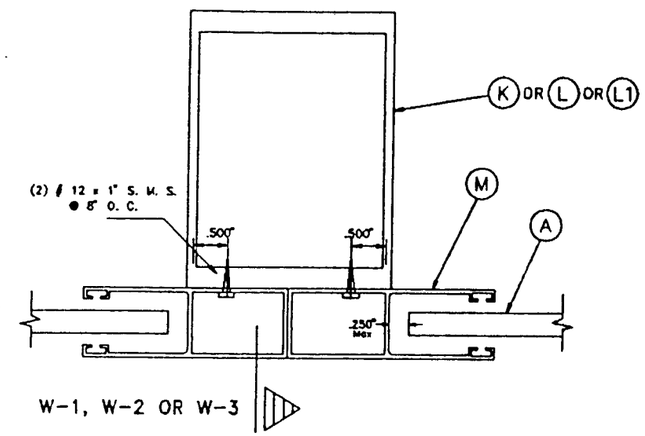


SECTION R – R : MULLION MOUNT

PRODUCT REVISED
as complying with the Florida Building Code
Acceptance No. 02-0426.03
Expiration Date 02/19/05
By
Miami Dade Product Control Division

PRODUCT RENEWED
ACCEPTANCE No. 00-1121.05 DOOR OR WINDOW GLASS
EXPIRATION DATE 02/19/2006
By Manuel Perez
PRODUCT CONTROL DIVISION
BUILDING CODE COMPLIANCE OFFICE

NOTE: 1" x 1 1/2" x 0.100" x 0'-6" ALUMINUM ANGLE W/(2) 1/4" ø x 2" TAPCON OR TAPPER ANCHORS TO WALL FOR SECTION X-X (1), AND OR (2) # 12 x 3/4" S. M. S TO Ⓚ (FOR SECTION X-X (2)). ATTACH ANGLE TO Ⓡ W/(3) 3/16" ø S. S. RIVETS.

PRODUCT RENEWED
ACCEPTANCE No. 98-0113.04
EXPIRATION DATE FEBRUARY 19, 2001
By Manuel Perez
PRODUCT CONTROL DIVISION
BUILDING CODE COMPLIANCE OFFICE

APPROVED AS COMPLYING WITH THE SOUTH FLORIDA BUILDING CODE
DATE OCTOBER 10, 1996
BY Manuel Perez
PRODUCT CONTROL DIVISION
BUILDING CODE COMPLIANCE OFFICE
ACCEPTANCE NO. 96-0913.02
DADE COUNTY

Walter A. Tillit
9/10/96

TILTECO INC.
TILLIT TESTING & ENGINEERING COMPANY
8595 N.W. 38th. St., Ste. 217, VIRGINIA GARDENS, FL 33166
Phone : (305)871-1530 . Fax : (305)871-1531
WALTER A. TILLIT Jr., P. E.
FLORIDA Lic. # 44167

ROLL-UP SHUTTER

SHUTTER GUARD
10801 OAK STREET N. E.
ST. PETERSBURG, FLORIDA 33716

| REV. No | DESCRIPTION | DATE | REV. No | DESCRIPTION | DATE |
|---|---|---|---|---|---|
| 1 | – | – | 3 | | |
| 2 | | | 4 | | |

SCALE –
DATE 9/9/96
DRAWING No 96 – 283
SHEET 4 OF 12

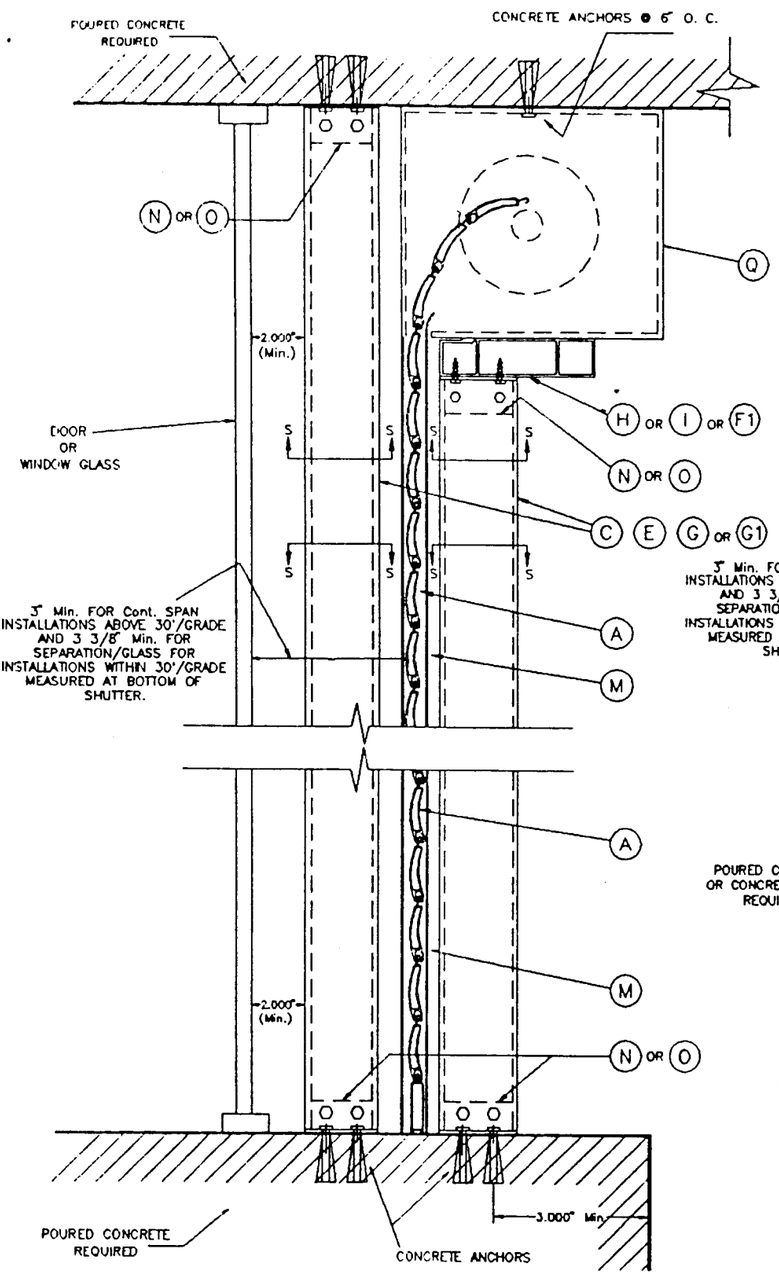


CEILING & FLOOR MOUNTING :

SECTION V – V (1)

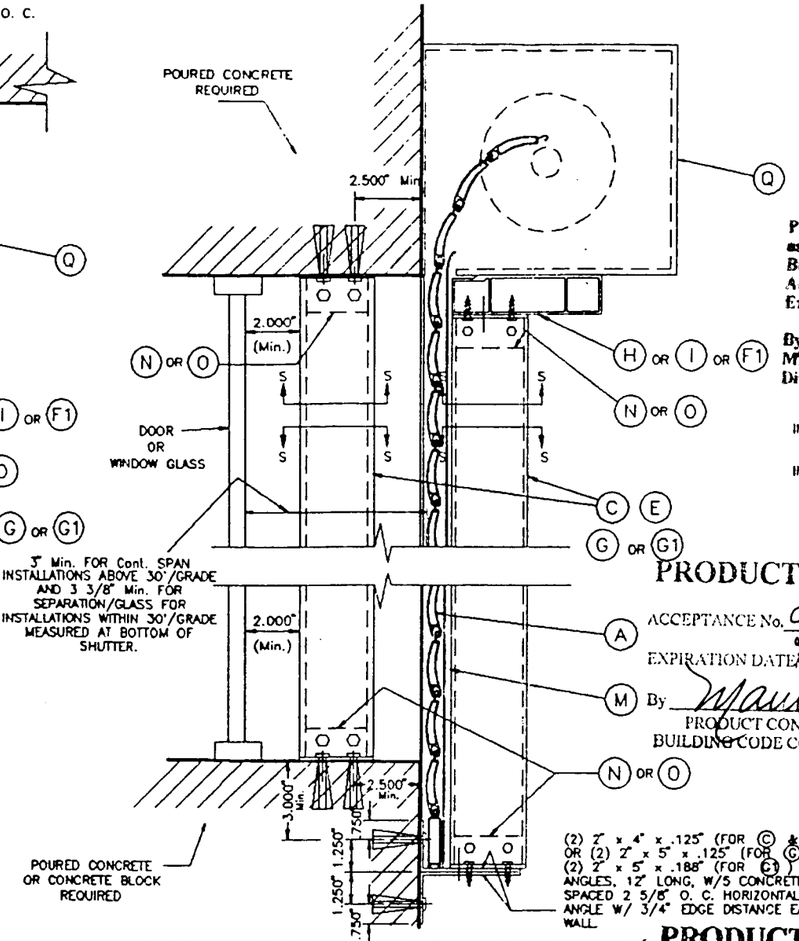


WALL MOUNTING : SECTION V – V (2)

PRODUCT REVISED
as complying with the Florida Building Code
Acceptance No. 02-0426.03
Expiration Date 6/19/06
By
Miami Dade Product Control Division

PRODUCT RENEWED
ACCEPTANCE No. 98-0113.04
EXPIRATION DATE FEBRUARY 19, 2001
By
PRODUCT CONTROL DIVISION
BUILDING CODE COMPLIANCE OFFICE

PRODUCT RENEWED
ACCEPTANCE No. 00-1121.05
EXPIRATION DATE 02/19/2006
By
PRODUCT CONTROL DIVISION
BUILDING CODE COMPLIANCE OFFICE

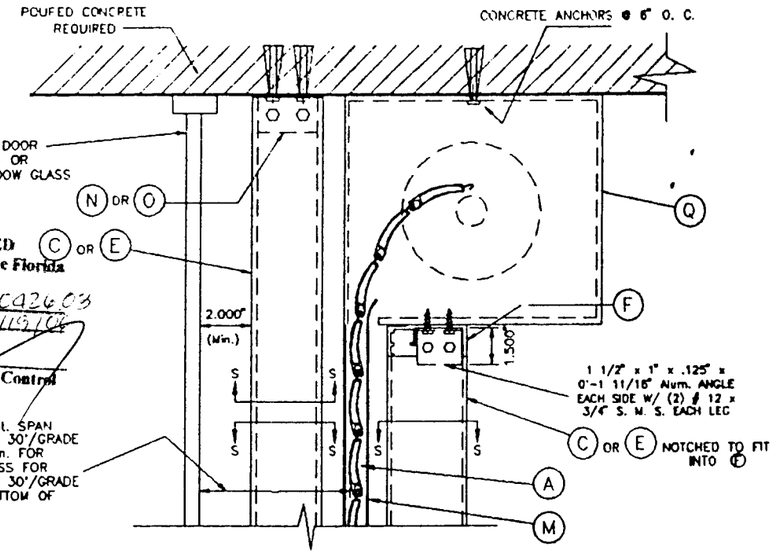


CEILING MOUNTING : SECTION V – V (1)

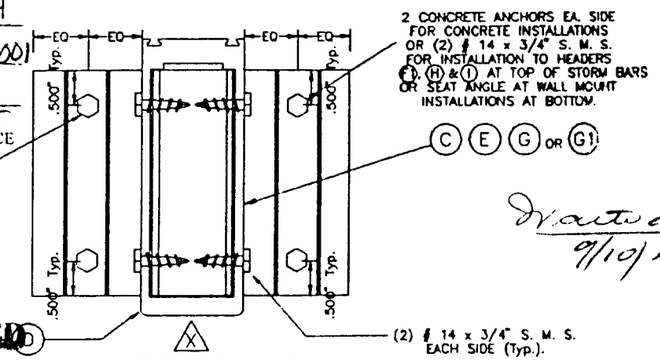


SECTION S – S

Walter A. Tilut
9/10/96

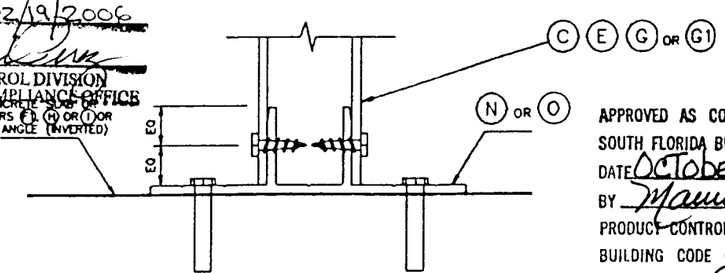


ELEVATION X – X

FULL SCALE

APPROVED AS COMPLYING WITH THE SOUTH FLORIDA BUILDING CODE
DATE OCTOBER 10 1996
BY
PRODUCT CONTROL DIVISION
BUILDING CODE COMPLIANCE OFFICE
ACCEPTANCE NO. 96-0913.02

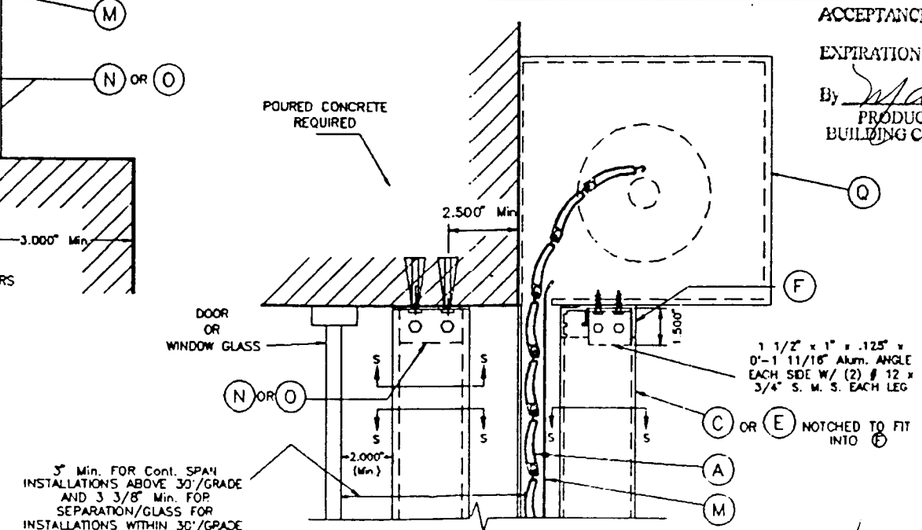


WALL MOUNTING : SECTION V – V (2)

DADE COUNTY

TILTECO INC.
TILUT TESTING & ENGINEERING COMPANY
8595 N.W. 34th. St., Ste. 217, VIRGINIA GARDENS, FL 33166
Phone : (305)871-1530 . Fax : (305)871-1531
WALTER A. TILUT Jr., P. E.

ROLL-UP SHUTTER

SHUTTER GUARD
10801 OAK STREET N. E.
ST. PETERSBURG, FLORIDA 33716

| REV. No | DESCRIPTION | DATE | REV. No | DESCRIPTION | DATE |
|---|---|---|---|---|---|
| 1 | – | – | 3 | | |

| | |
|---|---|
| SCALE | – |
| DATE | 9/9/96 |
| DRAWING No | 96 – 283 |
| | SHEET 5 OF 12 |

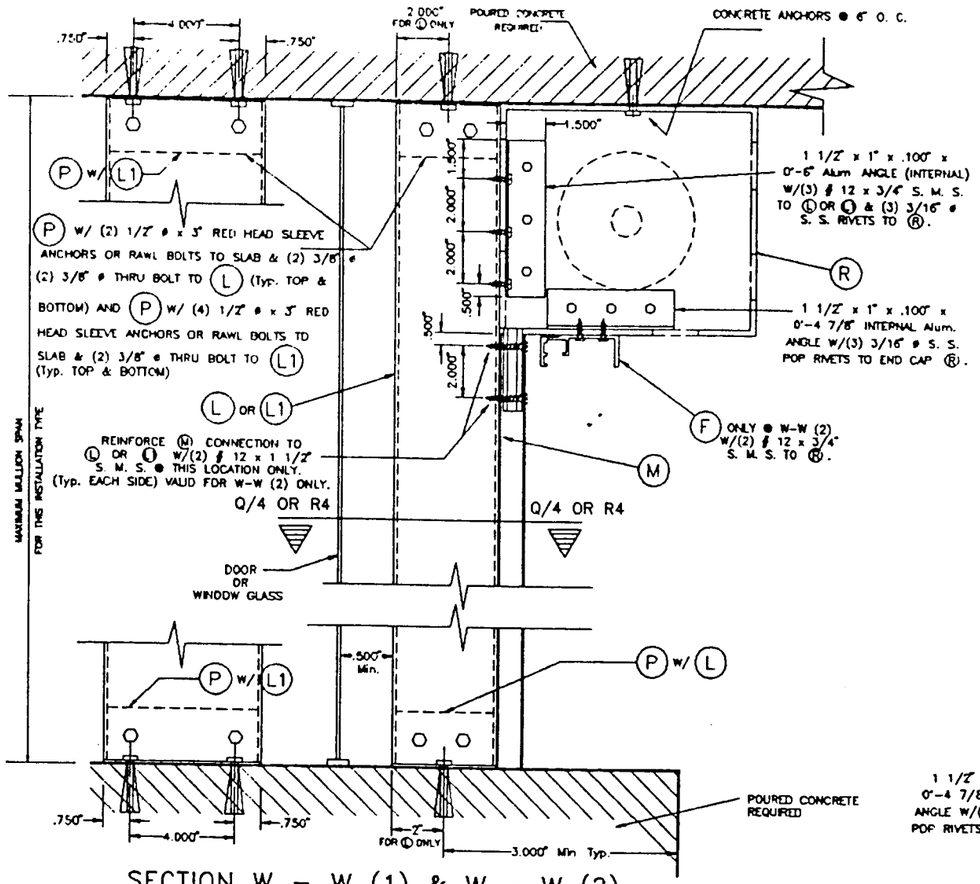


SECTION W – W (1) & W – W (2)

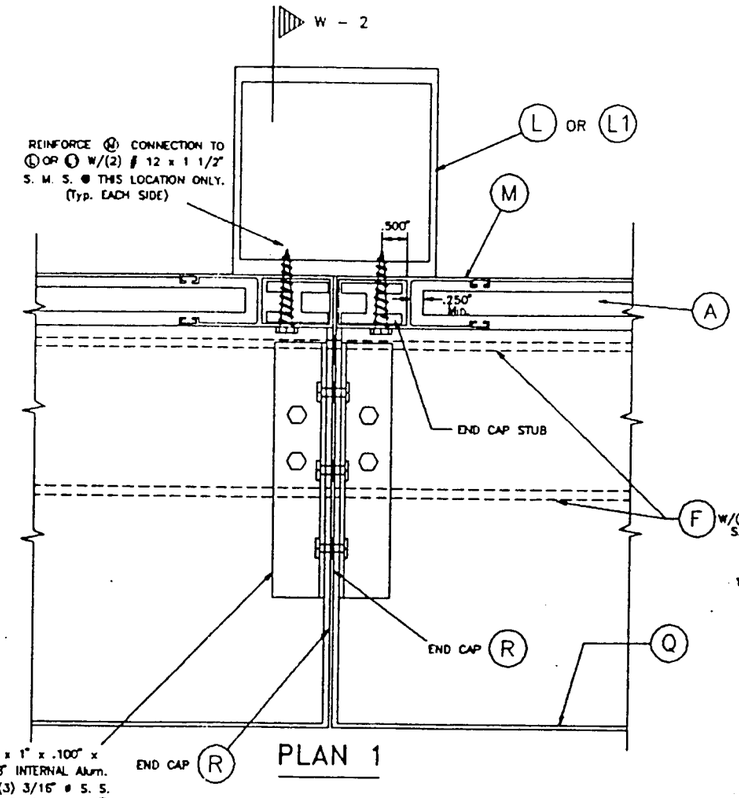


PLAN 1

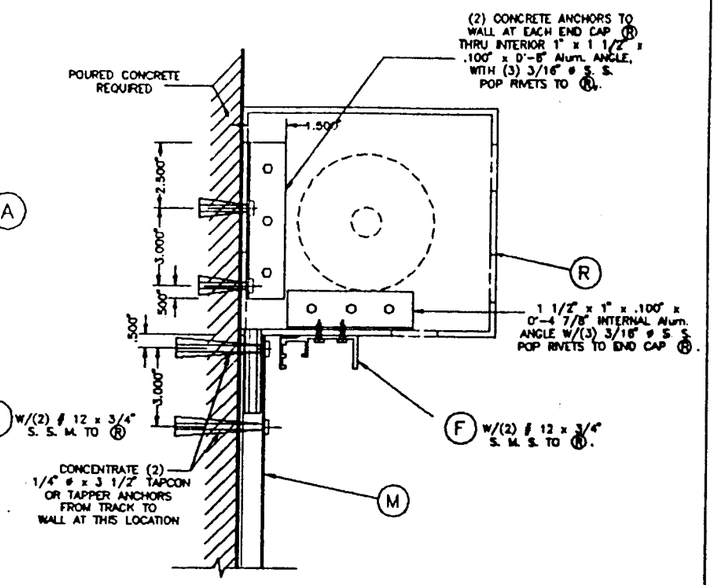


WALL MOUNTING :

SECTION W – W (4)

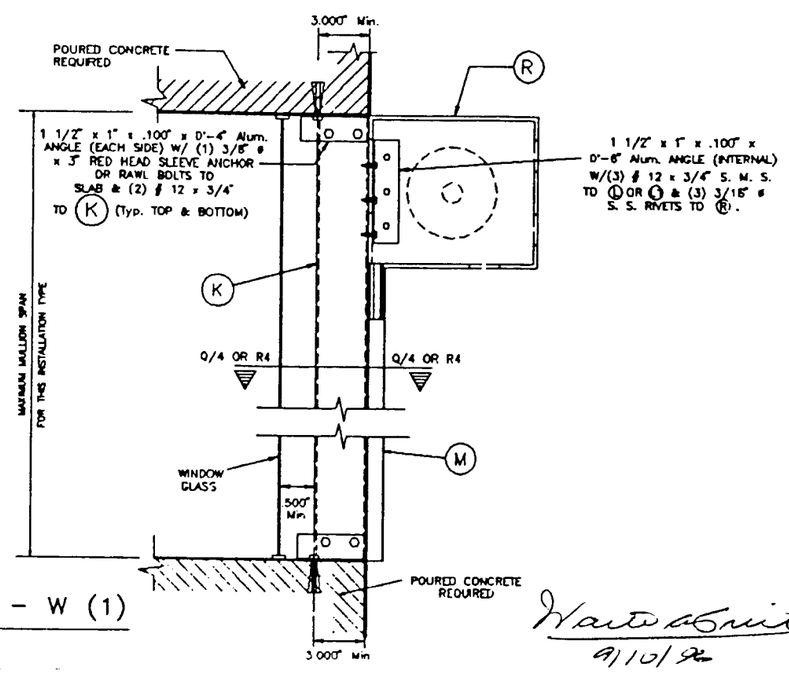


SECTION W – W (1)

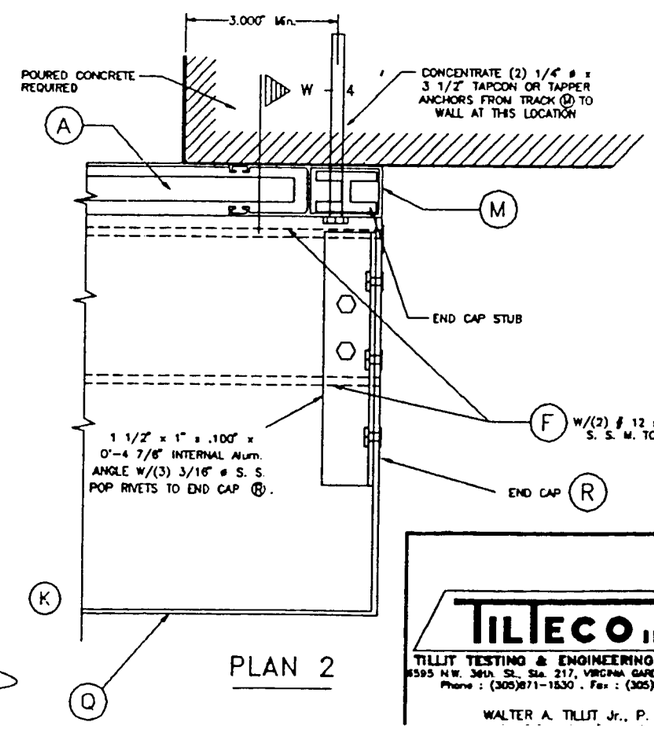


PLAN 2

Walter A. Tillit
9/10/96

PRODUCT REVISED
as complying with the Florida Building Code
Acceptance No. 00-0420.03
Expiration Date 02/19/06
By
Miami Dade Product Control Division

**PRODUCT RENEWED**
ACCEPTANCE No. 98-0113.04
EXPIRATION DATE FEBRUARY 19, 2001
By Manuel Sera
PRODUCT CONTROL DIVISION
BUILDING CODE COMPLIANCE OFFICE

**PRODUCT RENEWED**
ACCEPTANCE No. 00-1121.05
EXPIRATION DATE 02/19/2006
By Manuel Sera
PRODUCT CONTROL DIVISION
BUILDING CODE COMPLIANCE OFFICE

APPROVED AS COMPLYING WITH THE SOUTH FLORIDA BUILDING CODE
DATE OCTOBER 16 1996
BY Manuel Sera
PRODUCT CONTROL DIVISION
BUILDING CODE COMPLIANCE OFFICE
ACCEPTANCE NO. 96-0913.02

DADE COUNTY


TILTECO INC.
TILLIT TESTING & ENGINEERING COMPANY
8595 N.W. 34th St., Ste. 217, VIRGINIA GARDENS, FL 33166
Phone : (305)871-1530 . Fax : (305)871-1531
WALTER A. TILLIT Jr., P. E.


ROLL-UP SHUTTER

SHUTTER GUARD
10801 OAK STREET N. E.
ST. PETERSBURG, FLORIDA 33716

| REV. No | DESCRIPTION | DATE | REV. No | DESCRIPTION | DATE |
|---|---|---|---|---|---|
| 1 | - | - | 3 | | |

SCALE -
DATE 9/9/96
DRAWING No 96 – 283

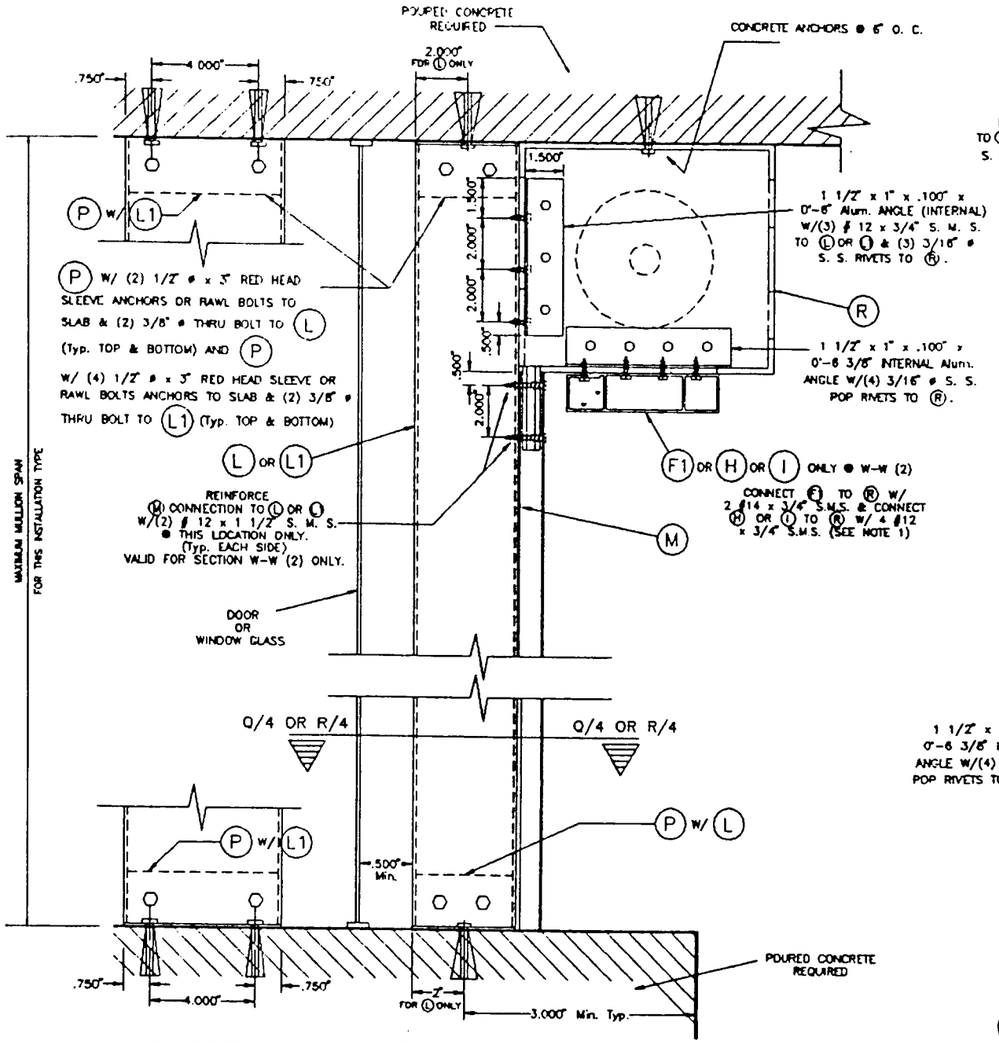


SECTION W – W (1) & W – W (2)

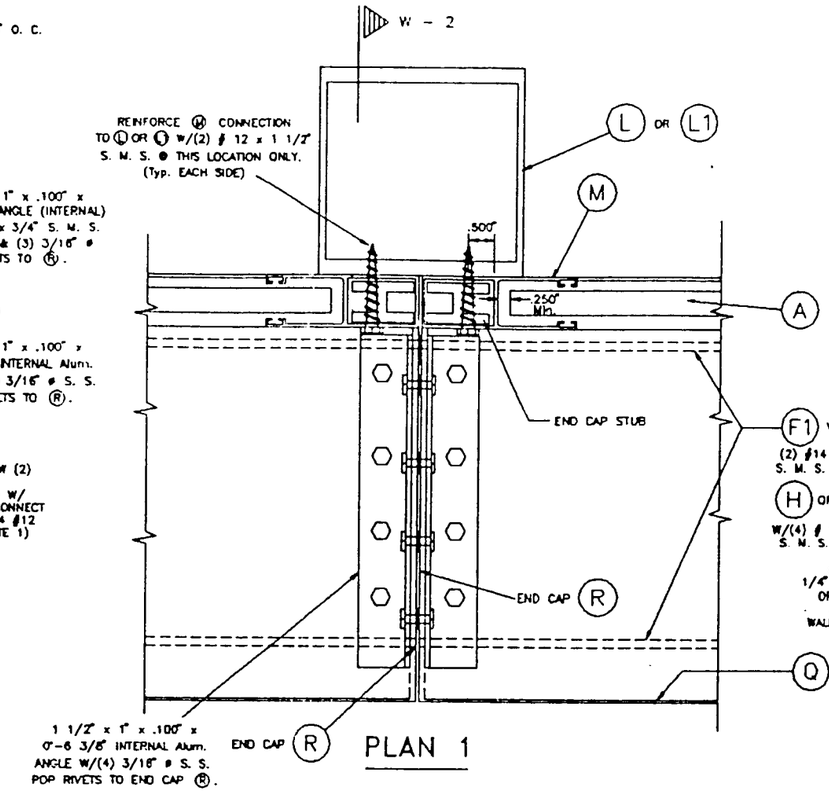


PLAN 1

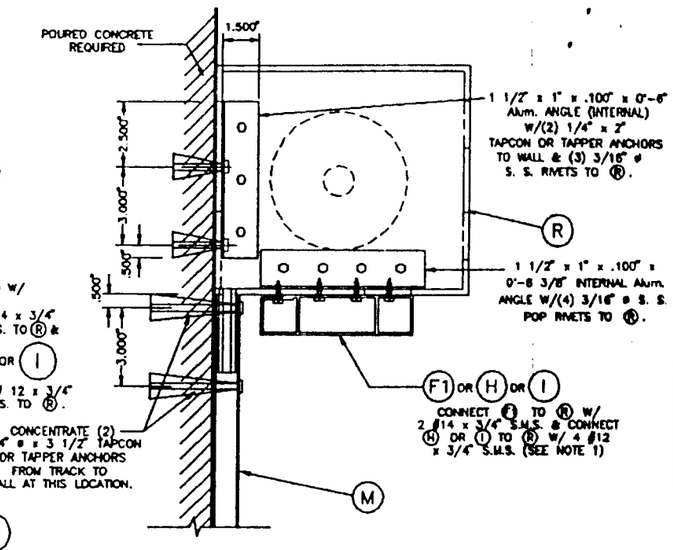


WALL MOUNTING :

SECTION W – W (4)

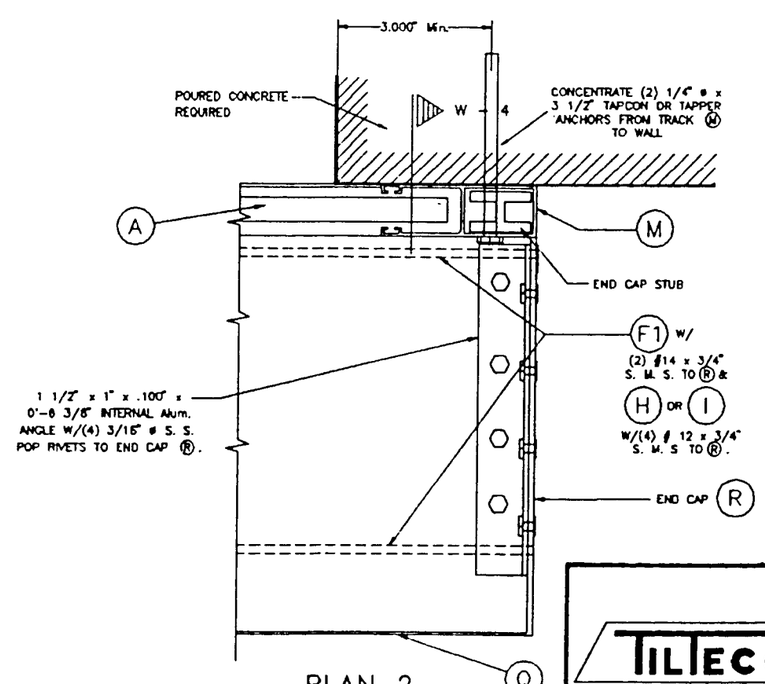


PLAN 2

NOTE 1: HEADERS (F), (H) OR (I) CONNECTION TO MULLION (L) OR (L1) OR WALL SHOWN ON SECTIONS W-W (1), W-W (2) & W-W (4), SHALL ONLY BE PERMITTED FOR DESIGN PRESSURE RATINGS UP TO 70 psf. FOR A STORM BAR SPAN (VERTICALLY) UP TO 8'-0", AND FOR A HEADER MAXIMUM SPAN OF 10'-0". FOR CONDITIONS EXCEEDING ABOVE MENTIONED, FRAMING SHOWN ON SECTIONS W-W (3) & W-W (5) INDICATED ON SHEET 8 OF 12 SHALL BE USED

PRODUCT REVISED
as complying with the Florida Buiding Code
Acceptance No C2-C424.C3
Expiration Date C2/19/96
By
Miami Dade Product Control Division

PRODUCT RENEWED
ACCEPTANCE No. 98-0113.04
EXPIRATION DATE FEBRUARY 19, 2001
By Manuel Perez
PRODUCT CONTROL DIVISION
BUILDING CODE COMPLIANCE OFFICE

PRODUCT RENEWED
ACCEPTANCE No. 00-1121.05
EXPIRATION DATE 02/19/2006
By Manuel Perez
PRODUCT CONTROL DIVISION
BUILDING CODE COMPLIANCE OFFICE

APPROVED AS COMPLYING WITH THE SOUTH FLORIDA BUILDING CODE
DATE OCTOBER 18 1996
BY Manuel Perez
PRODUCT CONTROL DIVISION
BUILDING CODE COMPLIANCE OFFICE
ACCEPTANCE NO. 96-0913.02

DADE COUNTY

Walter A. Tillit
8/10/96

TILTECO INC.
TILLIT TESTING & ENGINEERING COMPANY
6565 N.W. 36th St. Ste. 217, VIRGINIA GARDENS, Fl 33166
Phone : (305)871-1530 . Fax : (305)871-1531
WALTER A. TILLIT Jr., P. E.
FLORIDA Lic. # 44167

ROLL-UP SHUTTER

SHUTTER GUARD
10601 OAK STREET N. E
ST. PETERSBURG, FLORIDA 33716

| REV. No | DESCRIPTION | DATE | REV. No | DESCRIPTION | DATE |
|---|---|---|---|---|---|
| 1 | – | – | 3 | | |
| 2 | | | 4 | | |

SCALE –
DATE 8/9/96
DRAWING No 96 – 283
SHEET 7 OF 12

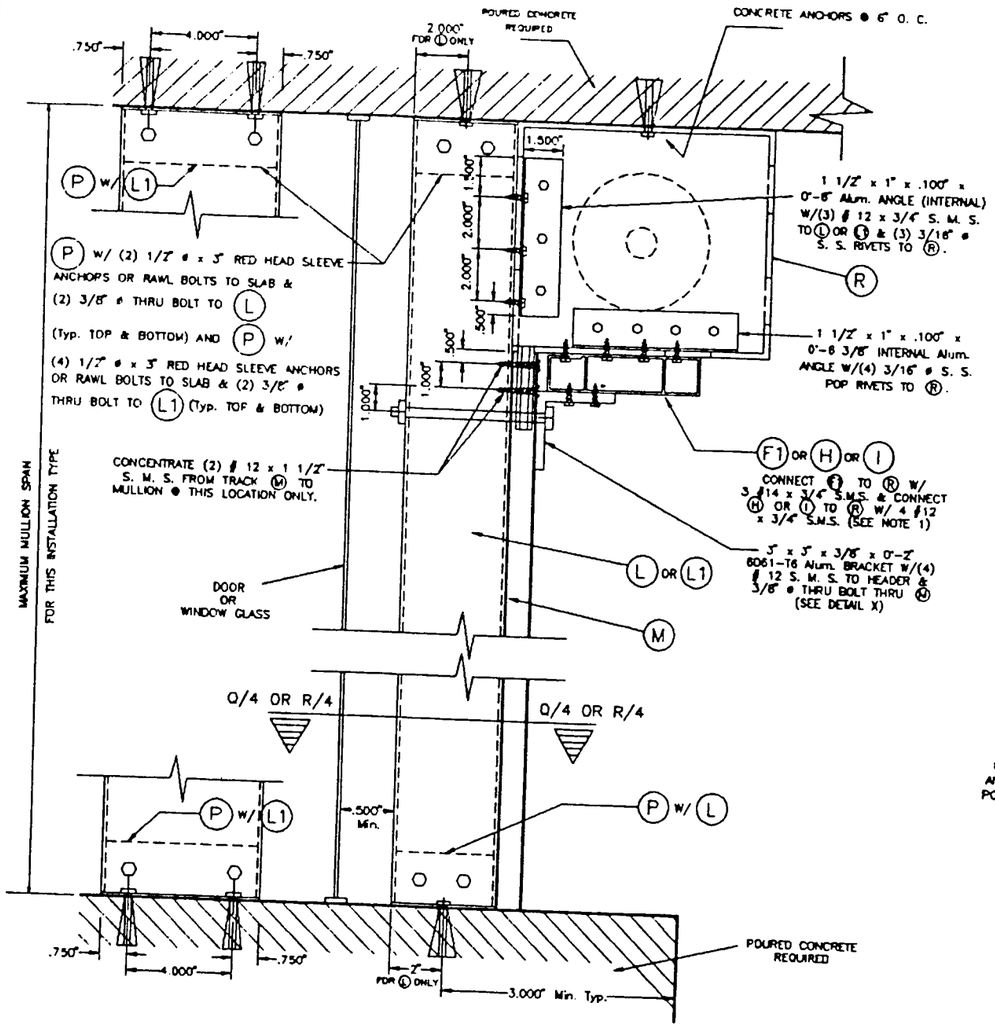


SECTION W – W (3)

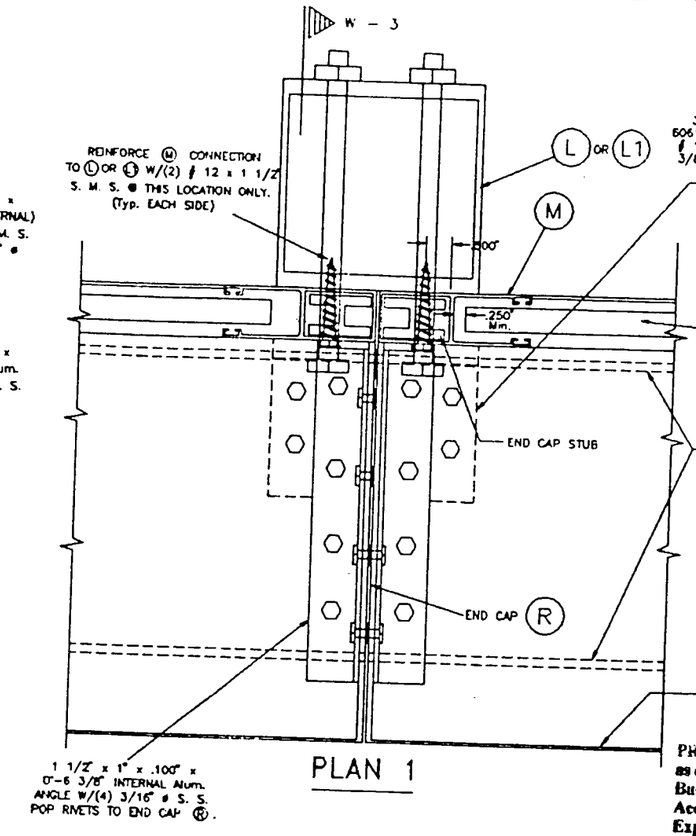


PLAN 1

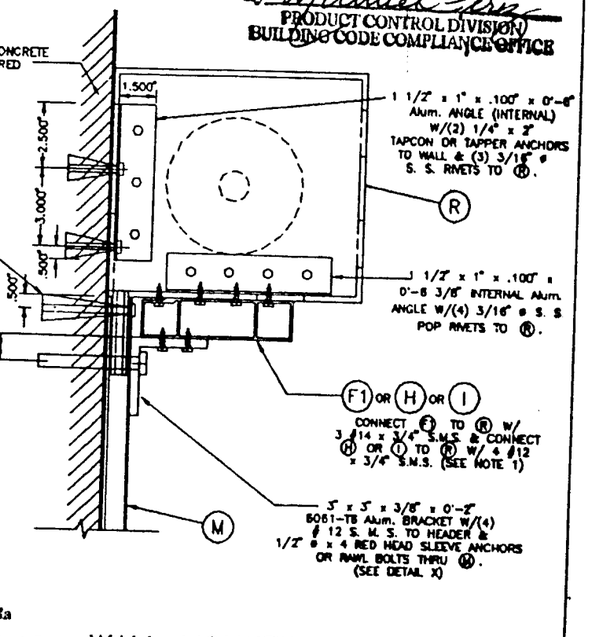


WALL MOUNTING :

SECTION W – W (5)

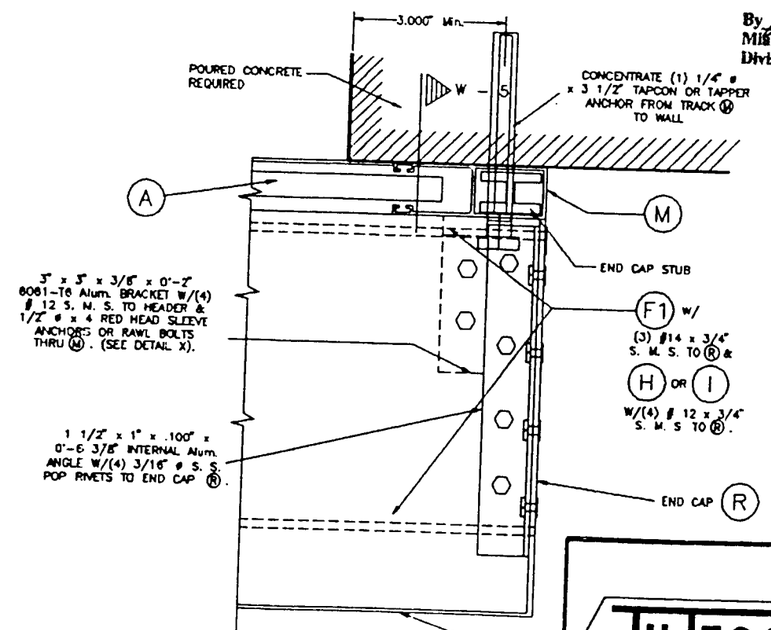


PLAN 2

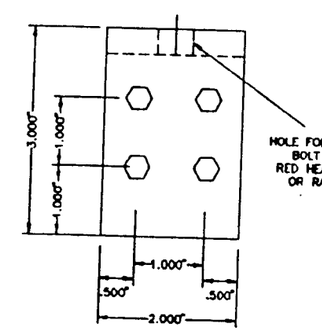


DETAIL X (PLAN)

**PRODUCT RENEWED**
ACCEPTANCE No. 00-1121.05
EXPIRATION DATE 02/19/2006
By Manuel Perez
PRODUCT CONTROL DIVISION
BUILDING CODE COMPLIANCE OFFICE

**PRODUCT REVISED**
as complying with the Florida Buiding Code
Acceptance No 02-0426.03
Expiration Date 02/19/06
By
Miami Dade Product Control Division

**PRODUCT RENEWED**
ACCEPTANCE No. 98-0113.04
EXPIRATION DATE FEBRUARY 19, 2001
By Manuel Perez
PRODUCT CONTROL DIVISION
BUILDING CODE COMPLIANCE OFFICE

APPROVED AS COMPLYING WITH THE SOUTH FLORIDA BUILDING CODE
DATE OCTOBER 10 1996
BY Manuel Perez
PRODUCT CONTROL DIVISION
BUILDING CODE COMPLIANCE OFFICE
ACCEPTANCE NO. 96-0913.02

DADE COUNTY

Walter A. Tillt
9/10/96

TILTECO INC.
TILLIT TESTING & ENGINEERING COMPANY
8585 N.W. 36th. St., Ste. 217, VIRGINIA GARDENS, FL 33166
Phone : (305)871-1530 . Fax : (305)871-1531
WALTER A. TILLIT Jr., P. E.
FLORIDA Lic. # 44167

ROLL-UP SHUTTER

SHUTTER GUARD
10801 OAK STREET N. E.
ST. PETERSBURG, FLORIDA 33716

| | |
|---|---|
| – | SCALE |
| 9/9/96 | DATE |
| 96 – 283 | DRAWING No |

| REV. No | DESCRIPTION | DATE | REV. No | DESCRIPTION | DATE |
|---|---|---|---|---|---|
| 1 | – | – | 3 | | |
| 2 | | | | | |

# SLAT PERFORMANCE CHART
## MAXIMUM NEGATIVE DESIGN PRESSURE RATING "W" (p. s. f.) AND CORRESPONDING MAXIMUM SLAT SPAN "L" FOR TYPE 1 SLAT
(USE NEGATIVE PRESSURE VALUES AS PER ASCE 7-88)

| SLAT TYPE 1 (US 60) / Max. DESIGN LOAD "W" (p.s.f.) | MAXIMUM SLAT SPAN | | MINIMUM SEPARATION TO GLASS | |
|---|---|---|---|---|
| | SINGLE & MULTIPLE UNIT * | SINGLE & MULTIPLE UNIT ** | SINGLE & MULTIPLE UNIT *** | SINGLE & MULTIPLE UNIT **** |
| 47.8 | 4'-8" | 5'-9" | 3 3/8" | 3" |
| 52.0 | 4'-8" | 5'-8" | 3 3/8" | 3" |
| 55.6 | 4'-8" | 5'-7" | 3 3/8" | 3" |
| 57.2 | 4'-8" | 5'-6" | 3 3/8" | 3" |
| 58.6 | 4'-8" | 5'-6" | 3 3/8" | 3" |
| 59.5 | 4'-8" | 5'-6" | 3 3/8" | 3" |
| 61.5 | 4'-8" | 5'-5" | 3 3/8" | 3" |
| 61.8 | 4'-8" | 5'-5" | 3 3/8" | 3" |
| 63.4 | 4'-8" | 5'-5" | 3 3/8" | 3" |
| 63.6 | 4'-8" | 5'-5" | 3 3/8" | 3" |
| 66.9 | 4'-8" | 5'-3" | 3 3/8" | 3" |
| 67.5 | 4'-8" | 5'-3" | 3 3/8" | 3" |
| 70.1 | 4'-8" | 5'-2" | 3 3/8" | 3" |
| 71.1 | 4'-8" | 5'-1" | 3 3/8" | 3" |

| SLAT TYPE 1 (US 60) / Max. DESIGN LOAD "W" (p.s.f.) | MAXIMUM SLAT SPAN | | MINIMUM SEPARATION TO GLASS | |
|---|---|---|---|---|
| | SINGLE & MULTIPLE UNIT * | SINGLE & MULTIPLE UNIT ** | SINGLE & MULTIPLE UNIT *** | SINGLE & MULTIPLE UNIT **** |
| 71.5 | 4'-8" | 5'-1" | 3 3/8" | 3" |
| 72.9 | 4'-8" | 5'-0" | 3 3/8" | 3" |
| 75.1 | 4'-8" | 5'-0" | 3 3/8" | 3" |
| 75.3 | 4'-8" | 4'-11" | 3 3/8" | 3" |
| 77.0 | 4'-8" | 4'-11" | 3 3/8" | 3" |
| 77.5 | 4'-8" | 4'-11" | 3 3/8" | 3" |
| 78.8 | 4'-8" | 4'-10" | 3 3/8" | 3" |
| 80.7 | 4'-8" | 4'-10" | 3 3/8" | 3" |
| 81.5 | 4'-8" | 4'-9" | 3 3/8" | 3" |
| 82.5 | 4'-8" | 4'-9" | 3 3/8" | 3" |
| 83.4 | 4'-8" | 4'-9" | 3 3/8" | 3" |
| 86.2 | 4'-8" | 4'-8" | 3 3/8" | 3" |
| 86.8 | 4'-7" | 4'-7" | 3 3/8" | 3" |
| 88.5 | 4'-7" | 4'-7" | 3 3/8" | 3" |
| 90.3 | 4'-6" | 4'-6" | 3 3/8" | 3" |

* SPANS VALID FOR INSTALLATIONS WITHIN THE FIRST 30'-0" ELEVATION OF BUILDING MEASURED AT BOTTOM OF SHUTTER.

** SPANS VALID FOR INSTALLATIONS LOCATED ABOVE THE FIRST 30'-0" ELEVATION OF BUILDING MEASURED AT BOTTOM OF SHUTTER.

*** MINIMUM SEPARARTION TO GLASS FOR SHUTTERS INSTALLED WITHIN THE FIRST 30'-0" ELEVATION OF BUILDING AND MAXIMUM SPAN.

**** MINIMUM SEPARATION TO GLASS FOR SHUTTERS INSTALLED ABOVE 30'-0" ELEVATION OF BUILDING, MEASURED AT BOTTOM OF SHUTTER.

NOTE: MINIMUM SEPARATION TO GLASS FOR SINGLE AND MULTIPLE UNITS SHALL BE MEASURED FROM SLAT TO GLASS.

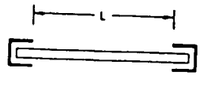


SINGLE SPAN

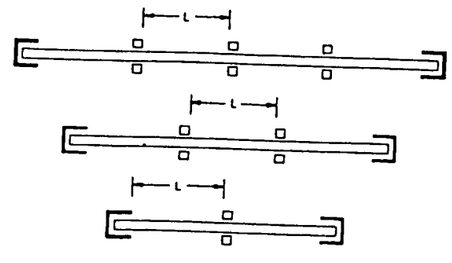


MULTIPLE SPAN

SPAN LAYOUT

PRODUCT REVISED
as complying with the Florida Building Code
Acceptance No. 02-0426.03
Expiration Date 02/19/06
By
Miami Dade Product Control Division

**PRODUCT RENEWED**
ACCEPTANCE No. 98-0113.04
EXPIRATION DATE FEBRUARY 19, 2001
By
PRODUCT CONTROL DIVISION
BUILDING CODE COMPLIANCE OFFICE

**PRODUCT RENEWED**
ACCEPTANCE No. 00-1121.05
EXPIRATION DATE 02/19/2006
By
PRODUCT CONTROL DIVISION
BUILDING CODE COMPLIANCE OFFICE

APPROVED AS COMPLYING WITH THE SOUTH FLORIDA BUILDING CODE
DATE OCTOBER 10 1996
BY
PRODUCT CONTROL DIVISION
BUILDING CODE COMPLIANCE OFFICE
ACCEPTANCE NO. 96-0913.02

Walter A. Tillit
9/10/96


TILTECO INC.
TILLIT TESTING & ENGINEERING COMPANY
8595 N.W. 36th. St., Ste. 217, VIRGINIA GARDENS, FL 33166
Phone : (305)871-1530 . Fax : (305)871-1531
WALTER A. TILLIT Jr., P. E.
FLORIDA Lic. # 44167


DADE COUNTY

ROLL-UP SHUTTER

SHUTTER GUARD
10801 OAK STREET N. E.
ST. PETERSBURG, FLORIDA 33716

| REV. No | DESCRIPTION | DATE | REV. No | DESCRIPTION | DATE |
|---|---|---|---|---|---|
| 1 | – | – | 3 | | |
| 2 | | | 4 | | |

SCALE –
DATE 9/9/96
DRAWING No 96 – 283
SHEET 8 OF 12

# STORM BAR LOADING CHART

## MAXIMUM NEGATIVE DESIGN PRESSURE RATING "W" (p. s. f.) AND CORRESPONDING MAXIMUM SPAN "L" FOR A GIVEN TYPE OF STORM BAR AND STORM BAR SPACING. (USE NEGATIVE PRESSURE VALUES AS PER ASCE 7-88)

| MAXIMUM DESIGN LOAD "W" (p.s.f.) | TYPE 1 STORM BAR PURLIN 3" | | | | TYPE 2 STORM BAR PURLIN 3" W/ 3" INSERT | | | | TYPE 3 STORM BAR PURLIN 4" | | | | TYPE 4 STORM BAR PURLIN 4" W/ 4" INSERT | | | |
|---|---|---|---|---|---|---|---|---|---|---|---|---|---|---|---|---|
| | STORM BAR SPACING • | | | | STORM BAR SPACING • | | | | STORM BAR SPACING • | | | | STORM BAR SPACING • | | | |
| | < 6'-0" | 5'-0" | 4'-0" | ≤ 3'-0" | < 6'-0" | 5'-0" | 4'-0" | ≤ 3'-0" | < 6'-0" | 5'-0" | 4'-0" | ≤ 3'-0" | < 6'-0" | 5'-0" | 4'-0" | ≤ 3'-0" |
| 47.8 | 6'-0" | 6'-4" | 6'-8" | 7'-2" | 7'-2" | 7'-6" | 7'-11" | 8'-6" | 8'-8" | 9'-0" | 9'-7" | 10'-3" | 9'-9" | 10'-2" | 10'-9" | 11'-7" |
| 52.0 | 5'-10" | 6'-2" | 6'-7" | 7'-0" | 7'-0" | 7'-4" | 7'-9" | 8'-4" | 8'-6" | 8'-10" | 9'-4" | 10'-1" | 9'-6" | 10'-0" | 10'-6" | 11'-4" |
| 55.6 | 5'-8" | 6'-1" | 6'-5" | 6'-11" | 6'-10" | 7'-2" | 7'-7" | 8'-2" | 8'-4" | 8'-9" | 9'-2" | 9'-11" | 9'-4" | 9'-10" | 10'-4" | 11'-2" |
| 57.2 | 5'-7" | 6'-0" | 6'-4" | 6'-10" | 6'-10" | 7'-2" | 7'-7" | 8'-1" | 8'-3" | 8'-8" | 9'-2" | 9'-10" | 9'-3" | 9'-9" | 10'-3" | 11'-1" |
| 58.6 | 5'-6" | 6'-0" | 4'-0" | 6'-10" | 6'-9" | 7'-1" | 7'-6" | 8'-2" | 8'-3" | 8'-7" | 9'-1" | 9'-9" | 9'-3" | 9'-8" | 10'-3" | 11'-0" |
| 59.5 | 5'-5" | 6'-0" | 6'-4" | 6'-10" | 6'-9" | 7'-0" | 7'-6" | 8'-0" | 8'-2" | 8'-7" | 9'-0" | 9'-9" | 9'-2" | 9'-8" | 10'-2" | 10'-11" |
| 61.5 | 5'-4" | 5'-10" | 6'-4" | 6'-9" | 6'-8" | 7'-0" | 7'-5" | 8'-0" | 8'-2" | 8'-6" | 9'-0" | 9'-8" | 9'-1" | 9'-7" | 10'-1" | 10'-10" |
| 61.8 | 5'-4" | 5'-10" | 6'-3" | 6'-9" | 6'-8" | 7'-0" | 7'-5" | 7'-11" | 8'-1" | 8'-6" | 9'-0" | 9'-8" | 9'-1" | 9'-6" | 10'-1" | 10'-10" |
| 63.4 | 5'-4" | 5'-9" | 6'-3" | 6'-9" | 6'-8" | 7'-11" | 7'-4" | 7'-11" | 8'-0" | 8'-5" | 8'-11" | 9'-7" | 9'-1" | 9'-6" | 10'-0" | 10'-9" |
| 63.6 | 5'-3" | 5'-9" | 6'-3" | 6'-8" | 6'-8" | 6'-11" | 7'-4" | 7'-11" | 8'-0" | 8'-5" | 8'-11" | 9'-7" | 9'-1" | 9'-6" | 10'-0" | 10'-9" |
| 66.9 | 5'-2" | 5'-7" | 6'-2" | 6'-7" | 6'-7" | 6'-10" | 7'-3" | 7'-10" | 8'-0" | 8'-4" | 8'-10" | 9'-6" | 8'-11" | 9'-4" | 9'-11" | 10'-7" |
| 67.5 | 5'-2" | 5'-7" | 6'-2" | 6'-7" | 6'-7" | 6'-10" | 7'-3" | 7'-10" | 7'-11" | 8'-4" | 8'-9" | 9'-5" | 8'-11" | 9'-4" | 9'-10" | 10'-7" |
| 70.1 | 5'-0" | 5'-6" | 6'-1" | 6'-6" | 6'-6" | 6'-9" | 7'-2" | 7'-8" | 7'-10" | 8'-3" | 8'-8" | 9'-4" | 8'-10" | 9'-3" | 9'-9" | 10'-6" |
| 71.1 | 5'-0" | 5'-6" | 6'-0" | 6'-6" | 6'-6" | 6'-9" | 7'-2" | 7'-8" | 7'-10" | 8'-2" | 8'-8" | 9'-4" | 8'-10" | 9'-3" | 9'-9" | 10'-6" |
| 71.5 | 5'-0" | 5'-5" | 6'-0" | 6'-6" | 6'-5" | 6'-9" | 7'-2" | 7'-8" | 7'-10" | 8'-2" | 8'-8" | 9'-4" | 8'-9" | 9'-2" | 9'-9" | 10'-5" |
| 72.9 | 4'-11" | 5'-5" | 6'-0" | 6'-5" | 6'-5" | 6'-9" | 7'-1" | 7'-8" | 7'-9" | 8'-2" | 8'-8" | 9'-3" | 8'-9" | 9'-2" | 9'-8" | 10'-5" |
| 75.1 | 4'-10" | 5'-4" | 5'-11" | 6'-5" | 6'-4" | 6'-8" | 7'-0" | 7'-7" | 7'-9" | 8'-1" | 8'-7" | 9'-2" | 8'-8" | 9'-1" | 9'-7" | 10'-4" |
| 75.3 | 4'-10" | 5'-4" | 5'-11" | 6'-5" | 6'-4" | 6'-8" | 7'-0" | 7'-7" | 7'-9" | 8'-1" | 8'-6" | 9'-2" | 8'-8" | 9'-1" | 9'-7" | 10'-4" |
| 77.0 | 4'-9" | 5'-3" | 5'-10" | 6'-4" | 6'-4" | 6'-7" | 7'-0" | 7'-6" | 7'-8" | 8'-0" | 8'-6" | 9'-2" | 8'-8" | 9'-0" | 9'-7" | 10'-3" |
| 77.5 | 4'-9" | 5'-3" | 5'-10" | 6'-4" | 6'-4" | 6'-7" | 7'-0" | 7'-6" | 7'-8" | 8'-0" | 8'-6" | 9'-1" | 8'-7" | 9'-0" | 9'-6" | 10'-3" |
| 78.8 | 4'-9" | 5'-2" | 5'-10" | 6'-3" | 6'-3" | 6'-7" | 7'-0" | 7'-5" | 7'-8" | 8'-0" | 8'-5" | 9'-1" | 8'-7" | 9'-0" | 9'-6" | 10'-2" |
| 80.7 | 4'-8" | 5'-2" | 5'-9" | 6'-3" | 6'-3" | 6'-6" | 6'-11" | 7'-5" | 7'-7" | 7'-11" | 8'-5" | 9'-0" | 8'-6" | 8'-11" | 9'-5" | 10'-2" |
| 81.5 | 4'-8" | 5'-1" | 5'-8" | 6'-4" | 6'-3" | 6'-6" | 6'-11" | 7'-5" | 7'-7" | 7'-11" | 8'-4" | 9'-0" | 8'-6" | 8'-11" | 9'-5" | 10'-1" |
| 82.5 | 4'-7" | 5'-1" | 5'-8" | 6'-3" | 6'-3" | 6'-6" | 6'-10" | 7'-5" | 7'-7" | 7'-11" | 8'-4" | 9'-0" | 8'-6" | 8'-10" | 9'-5" | 10'-1" |
| 83.4 | 4'-7" | 5'-0" | 5'-7" | 6'-3" | 6'-3" | 6'-6" | 6'-10" | 7'-4" | 7'-6" | 7'-11" | 8'-4" | 8'-11" | 8'-5" | 8'-10" | 9'-4" | 10'-1" |
| 86.2 | 4'-6" | 4'-11" | 5'-6" | 6'-2" | 6'-2" | 6'-5" | 6'-10" | 7'-4" | 7'-6" | 7'-10" | 8'-3" | 8'-10" | 8'-5" | 8'-9" | 9'-3" | 10'-0" |
| 86.8 | 4'-6" | 4'-11" | 5'-6" | 6'-2" | 6'-2" | 6'-5" | 6'-10" | 7'-4" | 7'-6" | 7'-10" | 8'-3" | 8'-10" | 8'-4" | 8'-9" | 9'-3" | 9'-11" |
| 88.5 | 4'-6" | 4'-11" | 5'-6" | 6'-2" | 6'-1" | 6'-5" | 6'-9" | 7'-3" | 7'-5" | 7'-9" | 8'-3" | 8'-10" | 8'-4" | 8'-9" | 9'-3" | 9'-11" |
| 90.3 | 4'-5" | 4'-10" | 5'-5" | 6'-2" | 6'-1" | 6'-4" | 6'-9" | 7'-3" | 7'-5" | 7'-9" | 8'-2" | 8'-10" | 8'-3" | 8'-8" | 9'-2" | 9'-10" |

• STORM BAR SPACING SHALL BE SUCH THAT MAXIMUM SLAT SPAN SHALL NOT BE EXCEEDED.

PRODUCT REVISED
as complying with the Florida Building Code
Acceptance No. 02-0426.03
Expiration Date 3/19/02
By
Miami Dade Product Control Division

PRODUCT RENEWED
ACCEPTANCE No. 00-1121.05
EXPIRATION DATE 02/19/2006
By
PRODUCT CONTROL DIVISION
BUILDING CODE COMPLIANCE OFFICE

PRODUCT RENEWED
ACCEPTANCE No. 98-0113.04
EXPIRATION DATE FEBRUARY 19, 2001
By
PRODUCT CONTROL DIVISION
BUILDING CODE COMPLIANCE OFFICE
APPROVED AS COMPLYING WITH THE SOUTH FLORIDA BUILDING CODE
DATE OCTOBER 10 1996
BY
PRODUCT CONTROL DIVISION
BUILDING CODE COMPLIANCE OFFICE
ACCEPTANCE NO. 96-0913.02

DADE COUNTY

Walter A. Tillit
9/10/96


TILTECO INC.
TILLIT TESTING & ENGINEERING COMPANY
8585 N.W. 36th St. Ste. 217, VIRGINIA GARDENS, Fl. 33166
Phone : (305)871-1530 . Fax : (305)871-1531
WALTER A. TILLIT Jr., P. E.
FLORIDA Lic # 44167


ROLL-UP SHUTTER

SHUTTER GUARD
10601 OAK STREET N. E
ST. PETERSBURG, FLORIDA 33716

| REV. No | DESCRIPTION | DATE | REV. No | DESCRIPTION | DATE |
|---|---|---|---|---|---|
| 1 | - | - | 3 | | |
| 2 | | | 4 | | |

SCALE -
DATE 9/9/96
DRAWING No 96 - 283
SHEET 10 OF 12

## HEADER LOADING CHART

## MAXIMUM NEGATIVE DESIGN PRESSURE RATING "W" (p. s. f.) AND CORRESPONDING MAXIMUM SPAN "L" FOR A GIVEN TYPE OF HEADER.

(USE NEGATIVE PRESSURE VALUES AS PER ASCE 7-88)

| MAXIMUM DESIGN LOAD "W" (p.s.f) | TYPE 1 HEADER HEADER STANDARD | | TYPE 1A HEADER 3 1/2" HEADER | | TYPE 2 HEADER HEADER FOR 10" SIDEFRAME (BRITTANY) | | TYPE 3 HEADER 7" HEADER | |
|---|---|---|---|---|---|---|---|---|
| | STORM BAR HEIGHT | | STORM BAR HEIGHT | | STORM BAR HEIGHT | | STORM BAR HEIGHT | |
| | ≤ 5'-0" | > 5' TO 8' | ≤ 5'-0" | > 5' TO 8' | ≤ 7'-0" | > 7' TO 10' | ≤ 8'-0" | > 8' TO 12' |
| 47.8 | 8'-3" | 6'-6" | 11'-4" | 9'-8" | 14'-2" | 12'-5" | 17'-0" | 15'-4" |
| 52.0 | 7'-11" | 6'-3" | 11'-1" | 9'-3" | 13'-10" | 11'-11" | 16'-8" | 14'-9" |
| 55.6 | 7'-7" | 6'-0" | 10'-11" | 8'-11" | 13'-8" | 11'-6" | 16'-5" | 14'-4" |
| 57.2 | 7'-6" | 5'-11" | 10'-10" | 8'-10" | 13'-6" | 11'-4" | 16'-3" | 14'-2" |
| 58.6 | 7'-5" | 5'-10" | 10'-9" | 8'-9" | 13'-5" | 11'-3" | 16'-2" | 13'-11" |
| 59.5 | 7'-4" | 5'-10" | 10'-9" | 8'-8" | 13'-4" | 11'-2" | 16'-1" | 14'-7" |
| 61.5 | 7'-3" | 5'-9" | 10'-8" | 8'-6" | 13'-1" | 10'-11" | 16'-0" | 13'-7" |
| 61.8 | 7'-3" | 5'-9" | 10'-7" | 8'-6" | 13'-0" | 10'-11" | 16'-0" | 13'-5" |
| 63.4 | 7'-2" | 5'-8" | 10'-7" | 8'-5" | 12'-11" | 10'-9" | 15'-10" | 13'-5" |
| 63.6 | 7'-2" | 5'-8" | 10'-7" | 8'-4" | 12'-11" | 10'-9" | 15'-10" | 13'-4" |
| 66.9 | 6'-11" | 5'-6" | 10'-4" | 8'-2" | 12'-6" | 10'-6" | 15'-8" | 13'-0" |
| 67.5 | 6'-11" | 5'-6" | 10'-3" | 8'-1" | 12'-6" | 10'-6" | 15'-7" | 13'-0" |
| 70.1 | 6'-10" | 5'-4" | 10'-1" | 8'-0" | 12'-3" | 10'-3" | 15'-6" | 12'-9" |
| 71.1 | 6'-9" | 5'-4" | 10'-0" | 7'-11" | 12'-2" | 10'-2" | 15'-5" | 12'-8" |
| 71.5 | 6'-9" | 5'-4" | 10'-0" | 7'-11" | 12'-2" | 10'-2" | 15'-5" | 12'-7" |
| 72.9 | 6'-8" | 5'-3" | 9'-11" | 7'-10" | 12'-0" | 10'-0" | 15'-4" | 12'-6" |
| 75.1 | 6'-7" | 5'-2" | 9'-9" | 7'-8" | 11'-10" | 9'-11" | 15'-0" | 12'-4" |
| 75.3 | 6'-7" | 5'-2" | 9'-9" | 7'-8" | 11'-10" | 9'-10" | 15'-0" | 12'-4" |
| 77.0 | 6'-6" | 5'-1" | 9'-8" | 7'-7" | 11'-8" | 9'-9" | 14'-11" | 12'-2" |
| 77.5 | 6'-6" | 5'-1" | 9'-7" | 7'-7" | 11'-8" | 9'-9" | 14'-10" | 12'-1" |
| 78.8 | 6'-5" | 5'-0" | 9'-6" | 7'-6" | 11'-7" | 9'-8" | 14'-9" | 12'-0" |
| 80.7 | 6'-4" | 5'-0" | 9'-5" | 7'-5" | 11'-5" | 9'-7" | 14'-7" | 11'-11" |
| 81.5 | 6'-4" | 5'-0" | 9'-4" | 7'-5" | 11'-4" | 9'-6" | 14'-6" | 11'-10" |
| 82.5 | 6'-3" | 4'-11" | 9'-4" | 7'-4" | 11'-4" | 9'-6" | 14'-4" | 11'-9" |
| 83.4 | 6'-3" | 4'-11" | 9'-3" | 7'-4" | 11'-3" | 9'-5" | 14'-4" | 11'-8" |
| 86.2 | 6'-1" | 4'-10" | 9'-1" | 7'-2" | 11'-0" | 9'-3" | 14'-1" | 11'-6" |
| 86.8 | 6'-1" | 4'-10" | 9'-1" | 7'-2" | 11'-0" | 9'-2" | 14'-0" | 11'-5" |
| 88.5 | 6'-0" | 4'-9" | 9'-0" | 7'-1" | 10'-11" | 9'-2" | 13'-11" | 11'-4" |
| 90.3 | 6'-0" | 4'-9" | 8'-11" | 7'-0" | 10'-10" | 9'-0" | 13'-9" | 11'-3" |

PRODUCT REVISED
as complying with the Florida Building Code
Acceptance No. 02-0426.03
Expiration Date 02/19/06
By
Miami Dade Product Control Division

**PRODUCT RENEWED**

ACCEPTANCE No. 98-0113.04
EXPIRATION DATE FEBRUARY 19, 2001
By
PRODUCT CONTROL DIVISION
BUILDING CODE COMPLIANCE OFFICE

PRODUCT RENEWED
ACCEPTANCE No. 00-1121.05
EXPIRATION DATE 02/19/2006
By
PRODUCT CONTROL DIVISION
BUILDING CODE COMPLIANCE OFFICE

APPROVED AS COMPLYING WITH THE SOUTH FLORIDA BUILDING CODE
DATE OCTOBER 10 1996
BY
PRODUCT CONTROL DIVISION
BUILDING CODE COMPLIANCE OFFICE
ACCEPTANCE NO. 96-0913.02

## MAXIMUM NEGATIVE DESIGN PRESSURE RATING "W" (p. s. f.) AND CORRESPONDING MAXIMUM ANCHOR SPACING (in.) SCHEDULE

| MAXIMUM DESIGN LOAD "W" (p.s.f.) | TO CONCRETE WALL | TO MASONRY WALL |
|---|---|---|
| FROM 47.8 TO 90.3 | 8" O. C. | 8" O. C. |

9/10/96

DADE COUNTY

TILTECO INC.
TILLIT TESTING & ENGINEERING COMPANY
8595 N.W. 36th. St., Ste. 217, VIRGINIA GARDENS, FL 33166
Phone : (305)871-1530 . Fax : (305)871-1531
WALTER A. TILLIT Jr., P. E.
FLORIDA Lic # 44167

ROLL-UP SHUTTER

SHUTTER GUARD
10801 OAK STREET N. E.
ST. PETERSBURG, FLORIDA 33716

| REV. No | DESCRIPTION | DATE | REV. No | DESCRIPTION | DATE |
|---|---|---|---|---|---|
| 1 | - | - | 3 | | |
| - | | | 4 | | |

SCALE -
DATE 9/9/96
DRAWING No 96 - 283
SHEET 11 OF 12

# MULLION LOADING CHART

## MAXIMUM NEGATIVE DESIGN PRESSURE RATING "W" (p. s. f.) AND CORRESPONDING MAXIMUM SPAN "M" FOR A GIVEN TYPE OF MULLION AND MULLION SPACING.

(USE NEGATIVE PRESSURE VALUES AS PER ASCE 7-88)

| MAXIMUM DESIGN LOAD "W" (p.s.f.) | TYPE 1 MULLION 3" x 2" RECT. TUBE | | | | | TYPE 2 MULLION 3" x 4" H. DUTY POST | | | | | TYPE 3 MULLION 3" x 6" H. DUTY POST | | | | |
|---|---|---|---|---|---|---|---|---|---|---|---|---|---|---|---|
| | MULLION SPACING | | | | | MULLION SPACING | | | | | MULLION SPACING | | | | |
| | 3' TOR LESS | > 3' TO 5' | > 5' TO 8' | > 8' TO 10' | >10' TO 12' | 3' OR LESS | > 3' TO 5' | > 5' TO 8' | > 8' TO 10' | >10' TO 12' | 3' OR LESS | > 3' TO 5' | > 5' TO 8' | > 8' TO 10' | >10' TO 12' |
| 47.8 | 6'-9" | 5'-8" | - | - | - | 11'-4" | 9'-7" | 9'-4" | 8'-8" | 8'-2" | 14'-10" | 12'-6" | 12'-4" | 11'-5" | 10'-9" |
| 52.0 | 6'-6" | 5'-6" | - | - | - | 11'-0" | 9'-3" | 9'-1" | 8'-5" | 7'-11" | 14'-5" | 12'-2" | 12'-0" | 11'-1" | 10'-5" |
| 55.6 | 6'-4" | 5'-5" | - | - | - | 10'-9" | 9'-0" | 8'-11" | 8'-3" | 7'-10" | 14'-2" | 11'-11" | 11'-8" | 10'-10" | 10'-3" |
| 57.2 | 6'-4" | 5'-4" | - | - | - | 10'-8" | 9'-0" | 8'-10" | 8'-2" | 7'-8" | 14'-0" | 11'-10" | 11'-7" | 10'-9" | 10'-1" |
| 58.6 | 6'-4" | 5'-3" | - | - | - | 10'-7" | 8'-11" | 8'-9" | 8'-1" | 7'-8" | 13'-11" | 11'-9" | 11'-6" | 10'-8" | 10'-0" |
| 59.5 | 6'-3" | 5'-3" | - | - | - | 10'-6" | 8'-10" | 8'-8" | 8'-0" | 7'-7" | 13'-10" | 11'-8" | 11'-5" | 10'-7" | 10'-0" |
| 61.5 | 6'-2" | 5'-2" | - | - | - | 10'-5" | 8'-9" | 8'-7" | 8'-0" | 7'-6" | 13'-8" | 11'-6" | 11'-4" | 10'-6" | 9'-11" |
| 61.8 | 6'-2" | 5'-2" | - | - | - | 10'-4" | 8'-9" | 8'-7" | 8'-0" | 7'-6" | 13'-8" | 11'-6" | 11'-3" | 10'-6" | 9'-10" |
| 63.4 | 6'-2" | 5'-2" | - | - | - | 10'-3" | 8'-8" | 8'-7" | 7'-11" | 7'-5" | 13'-6" | 11'-5" | 11'-2" | 10'-5" | 9'-9" |
| 63.6 | 6'-1" | 5'-2" | - | - | - | 10'-3" | 8'-8" | 8'-6" | 7'-11" | 7'-5" | 13'-6" | 11'-5" | 11'-2" | 10'-5" | 9'-9" |
| 66.9 | 6'-0" | 5'-1" | - | - | - | 10'-1" | 8'-6" | 8'-4" | 7'-9" | 7'-4" | 13'-3" | 11'-2" | 11'-0" | 10'-2" | 9'-7" |
| 67.5 | 6'-0" | 5'-0" | - | - | - | 10'-0" | 8'-5" | 8'-4" | 7'-9" | 7'-3" | 13'-3" | 11'-2" | 11'-0" | 10'-2" | 9'-7" |
| 70.1 | 5'-11" | 5'-0" | - | - | - | 10'-0" | 8'-5" | 8'-3" | 7'-8" | 7'-2" | 13'-1" | 11'-0" | 10'-10" | 10'-1" | 9'-5" |
| 71.1 | 5'-10" | 5'-0" | - | - | - | 9'-11" | 8'-4" | 8'-2" | 7'-7" | 7'-2" | 13'-0" | 11'-0" | 10'-9" | 10'-0" | 9'-5" |
| 71.5 | 5'-10" | 4'-11" | - | - | - | 9'-11" | 8'-4" | 8'-2" | 7'-7" | 7'-2" | 13'-0" | 10'-11" | 10'-9" | 10'-0" | 9'-5" |
| 72.9 | 5'-10" | 4'-11" | - | - | - | 9'-10" | 8'-4" | 8'-2" | 7'-7" | 7'-1" | 12'-11" | 10'-11" | 10'-8" | 9'-11" | 9'-4" |
| 75.1 | 5'-10" | 4'-10" | - | - | - | 9'-9" | 8'-2" | 8'-0" | 7'-6" | 7'-0" | 12'-9" | 10'-9" | 10'-7" | 9'-10" | 9'-3" |
| 75.3 | 5'-9" | 4'-10" | - | - | - | 9'-9" | 8'-2" | 8'-0" | 7'-6" | 7'-0" | 12'-9" | 10'-9" | 10'-7" | 9'-10" | 9'-3" |
| 77.0 | 5'-9" | 4'-10" | - | - | - | 9'-9" | 8'-2" | 8'-0" | 7'-5" | 7'-0" | 12'-8" | 10'-8" | 10'-6" | 9'-9" | 9'-2" |
| 77.5 | 5'-9" | 4'-10" | - | - | - | 9'-8" | 8'-2" | 8'-0" | 7'-5" | - | 12'-8" | 10'-8" | 10'-6" | 9'-9" | 9'-2" |
| 78.8 | 5'-8" | 4'-10" | - | - | - | 9'-7" | 8'-1" | 7'-11" | 7'-4" | - | 12'-7" | 10'-7" | 10'-5" | 9'-8" | 9'-1" |
| 80.7 | 5'-8" | 4'-9" | - | - | - | 9'-6" | 8'-0" | 7'-10" | 7'-4" | - | 12'-6" | 10'-6" | 10'-4" | 9'-7" | 9'-0" |
| 81.5 | 5'-7" | 4'-9" | - | - | - | 9'-6" | 8'-0" | 7'-10" | 7'-3" | - | 12'-5" | 10'-6" | 10'-4" | 9'-7" | 9'-0" |
| 82.5 | 5'-7" | 4'-9" | - | - | - | 9'-5" | 7'-11" | 7'-9" | 7'-3" | - | 12'-5" | 10'-5" | 10'-3" | 9'-6" | 8'-11" |
| 83.4 | 5'-6" | 4'-9" | - | - | - | 9'-5" | 7'-11" | 7'-8" | 7'-3" | - | 12'-4" | 10'-5" | 10'-3" | 9'-6" | 8'-11" |
| 86.2 | 5'-6" | 4'-8" | - | - | - | 9'-3" | 7'-10" | 7'-8" | 7'-2" | - | 12'-2" | 10'-4" | 10'-1" | 9'-5" | 8'-10" |
| 86.8 | 5'-6" | 4'-7" | - | - | - | 9'-3" | 7'-10" | 7'-8" | 7'-2" | - | 12'-2" | 10'-3" | 10'-1" | 9'-4" | 8'-10" |
| 88.5 | 5'-6" | 4'-7" | - | - | - | 9'-3" | 7'-10" | 7'-7" | 7'-1" | - | 12'-1" | 10'-2" | 10'-0" | 9'-4" | 8'-9" |
| 90.3 | 5'-5" | 4'-7" | - | - | - | 9'-2" | 7'-9" | 7'-7" | 7'-0" | - | 12'-0" | 10'-2" | 9'-11" | 9'-3" | 8'-8" |

PRODUCT REVISED
as complying with the Florida Building Code
Acceptance No. 02-0426.03
Expiration Date 02/19/06
By
Miami Dade Product Control Division

PRODUCT RENEWED
ACCEPTANCE No. 00-1121.05
EXPIRATION DATE 02/19/2006
By
PRODUCT CONTROL DIVISION
BUILDING CODE COMPLIANCE OFFICE

PRODUCT RENEWED
ACCEPTANCE No. 98-0113.04
EXPIRATION DATE FEBRUARY 19, 2001
By
PRODUCT CONTROL DIVISION
BUILDING CODE COMPLIANCE OFFICE

APPROVED AS COMPLYING WITH THE SOUTH FLORIDA BUILDING CODE
DATE OCTOBER 16 1996
BY
PRODUCT CONTROL DIVISION
BUILDING CODE COMPLIANCE OFFICE
ACCEPTANCE NO. 96-0913.02

DADE COUNTY

Walter A. Tillit
9/10/96

TILTECO INC.
TILLIT TESTING & ENGINEERING COMPANY
8565 N.W. 36th. St., Ste. 217, VIRGINIA GARDENS, FL 33166
Phone : (305)871-1530 . Fax : (305)871-1531
WALTER A. TILLIT Jr., P. E.
FLORIDA Lic. # 44167

ROLL-UP SHUTTER

SHUTTER GUARD
10601 OAK STREET N. E.
ST. PETERSBURG, FLORIDA 33716

| REV. No | DESCRIPTION | DATE | REV. No | DESCRIPTION | DATE |
|---|---|---|---|---|---|
| 1 | - | - | 3 | | |
| 2 | | | 4 | | |

SCALE -
DATE 8/9/96
DRAWING No 96 - 283
SHEET 12 OF 12