MIAMI-DADE

BUILDING CODE COMPLIANCE OFFICE (BCCO)
PRODUCT CONTROL DIVISION

MIAMI-DADE COUNTY, FLORIDA
METRO-DADE FLAGLER BUILDING
140 WEST FLAGLER STREET, SUITE 1603
MIAMI, FLORIDA 33130-1563
(305) 375-2901 FAX (305) 375-2908

NOTICE OF ACCEPTANCE (NOA)

Bernardo Shutter Corporation
915 South Dixie Highway Corporation
Pompano Beach, FL 33060

SCOPE:

This NOA is being issued under the applicable rules and regulations governing the use of construction materials. The documentation submitted has been reviewed by Miami-Dade County Product Control Division and accepted by the Board of Rules and Appeals (BORA) to be used in Miami Dade County and other areas where allowed by the Authority Having Jurisdiction (AHJ).

This NOA shall not be valid after the expiration date stated below. The Miami-Dade County Product Control Division (In Miami Dade County) and/or the AHJ (in areas other than Miami Dade County) reserve the right to have this product or material tested for quality assurance purposes. If this product or material fails to perform in the accepted manner, the manufacturer will incur the expense of such testing and the AHJ may immediately revoke, modify, or suspend the use of such product or material within their jurisdiction. BORA reserves the right to revoke this acceptance, if it is determined by Miami-Dade County Product Control Division that this product or material fails to meet the requirements of the applicable building code.

This product is approved as described herein, and has been designed to comply with the High Velocity Hurricane Zone of the Florida Building Code.

DESCRIPTION: Extruded Aluminum Accordion Shutter

APPROVAL DOCUMENT: Drawing No.95-100, titled "Bernardo Shutter Corporation", sheets 1 through 11 of 11, prepared, signed sealed by Gene S. Sanders, P.E., dated 08/14/01, bearing the Miami-Dade County Product Control Revision stamp with the Notice of Acceptance number and expiration date by the Miami-Dade County Product Control Division.

MISSILE IMPACT RATING: Large and Small Missile Impact

LABELING: Each unit shall bear a permanent label with the manufacturer's name or logo, city, state and following statement: "Miami-Dade County Product Control Approved", unless otherwise noted herein.

RENEWAL of this NOA shall be considered after a renewal application has been filed and there has been no change in the applicable building code negatively affecting the performance of this product.

TERMINATION of this NOA will occur after the expiration date or if there has been a revision or change in the materials, use, and/or manufacture of the product or process. Misuse of this NOA as an endorsement of any product, for sales, advertising or any other purposes shall automatically terminate this NOA. Failure to comply with any section of this NOA shall be cause for termination and removal of NOA.

ADVERTISEMENT: The NOA number preceded by the words Miami-Dade County, Florida, and followed by the expiration date may be displayed in advertising literature. If any portion of the NOA is displayed, then it shall be done in its entirety.

INSPECTION: A copy of this entire NOA shall be provided to the user by the manufacturer or its distributors and shall be available for inspection at the job site at the request of the Building Official.

This NOA **revises NOA #01-0709.08** and, consists of this page 1 as well as approval document mentioned above. The submitted documentation was reviewed by **Raul Rodriguez.**

PRODUCT CONTROL ACCEPTED

SHUTTER ENTERPRISES GROUP INC.

POMPANO BEACH, FLORIDA 33060

ACCORDION SHUTTER

PRODUCT RENEWED
ACCEPTANCE No. 01-0709.08
EXPIRATION DATE 09/07/2006
By Helmy A. Mak
PRODUCT CONTROL DIVISION
BUILDING CODE COMPLIANCE OFFICE

GENERAL NOTES

1.0 SHUTTER SYSTEM IS DESIGNED TO MEET THE REQUIREMENTS OF THE SOUTH FLORIDA BUILDING CODE. DADE COUNTY 1994 EDITION

1.1 DESIGN WIND PRESSURES SHALL BE DERIVED USING THE AMERICAN SOCIETY OF CIVIL ENGINEERS STANDARD ASCE 7-88 USING A FASTEST MILE WIND SPEED OF 110 MPH, COASTAL EXPOSURE C. THESE CHARTS SHALL BE USED FOR LOCATIONS WITHIN EXPOSURE D DEFINED AS 1500 FT. OF LARGE BODIES OF WATER (OR 10 TIMES THE BUILDING HEIGHT WHICHEVER IS GREATER).

2.0 ALUMINUM COMPONENTS ARE DESIGNED IN ACCORDANCE WITH THE "ALUMINUM CONSTRUCTION MANUAL".

3.0 THE ALUMINUM ALLOYS USED TO DERIVE THESE DESIGN CHARTS ARE AS SHOWN IN THE DRAWINGS.

4.0 STEEL SURFACES IN CONTACT WITH ALUMINUM COMPONENTS SHALL BE GALVANIZED OR HAVE ONE COAT OF ZINC CHROMATE PRIMER IN ACCORDANCE WITH FEDERAL SPEC TTP-645.

5.0 THE EMBEDMENT FOR ANCHORS SHOWN IN THESE DRAWINGS IS THE REQUIRED MINIMUM PENETRATION INTO THE BASE MATERIAL OF THE SUPPORTING STRUCTURE. MINIMUM EDGE DISTANCE (3 1/2") SHOWN IN THESE DRAWINGS INCLUDE A 1/2" ALLOWANCE FOR STUCCO.

6.0 BOLTS, NUTS AND WASHERS SHALL BE STAINLESS STEEL OR ALUMINUM ALLOY 2024-T4 OR 7075-T6 OR PLATED STEEL.

7.0 DEFLECTION DESIGN CRITERIA.

7.1 MULLIONS HAVE BEEN SIZED TO LIMIT THE DEFLECTION OF THE ELEMENTS TO ≤ L/180 AT THE DESIGN LOAD.

7.2 SLATS HAVE BEEN SIZED TO LIMIT THE DEFLECTION AT THE DESIGN LOAD TO BE ≤ L/30 FOR SUCTION AND THE LESSER OF L/30 OR 2 INCHES WHEN SUBJECTED TO POSITIVE PRESSURE.

7.3 SHUTTERS SHALL BE CONFIGURED TO HAVE NO LESS THAN THE MINIMUM CLEARANCE SHOWN IN THE DESIGN CURVES BETWEEN THE UNLOADED SLAT AND GLAZING. THE MINIMUM CLEARANCE IS THE SLAT DEFLECTION PLUS 1 INCH.

SEP 5 2001

TABLE OF CONTENTS

PAGE NO.	DESCRIPTION
1	GENERAL NOTES, TABLE OF CONTENTS
2	PLAN, SECTION, ELEVATION
3	COMPONENTS
4	4" ACCORDION SLAT
5	TRACK MOUNTING CONNECTIONS 1-2
6	TRACK MOUNTING CONNECTIONS 1A-2A
7	TRACK MOUNTING CONNECTIONS 3-4
8	TRACK MOUNTING CONNECTIONS 5-6
9	REMOVABLE TRACK 7
10	CORNER POST OPTIONS & END SLAT FASTENING
11	LOCK ASSEMBLY

PRODUCT MARKING

A LABEL SHALL BE PLACED ON THE FEMALE CENTER LOCK ABOVE THE LOCK ASSEMBLY, WITH THE FOLLOWING STATEMENT:

EXTRUDED ALUMINUM ACCORDION SHUTTER
DADE COUNTY PRODUCT CONTROL APPROVED
MANUFACTURED BY BERNARDO SHUTTER, CORP.

American Consulting Engineers Council Member
Supporting Excellence In Engineering

JENKINS & CHARLAND INCORPORATED Consulting Engineers
3559 N.W. 53rd Street
FORT LAUDERDALE, FL 33309
(305) 484-7777

TO THE BEST OF MY KNOWLEDGE AND ABILITY. THE COMPLETED STRUCTURE DEPICTED ON THESE PLANS COMPLIES WITH THE APPLICABLE MINIMUM BUILDING CODES.

PROF. ENGINEER
GENE S. SANDERS
FLA. PE # 26590

PRODUCT REVISED
as complying with the Florida Building Code
Acceptance No. 02-0426.05
Expiration Date 09/07/007
By
Miami Dade Product Control Division

BERNARDO SHUTTER CORPORATION
POMPANO BEACH, FLORIDA 33060

SCALE:	DRAWING NUMBER	DRAWN BY: VICKERY
DATE: 4-14-95	95-100	REVISED 8-14-01
		REVISED 6-5-95
		REVISED 6-17-
		REVISE
		PAGE NO. 1 OF

GENERAL NOTES & TABLE OF CONTENTS

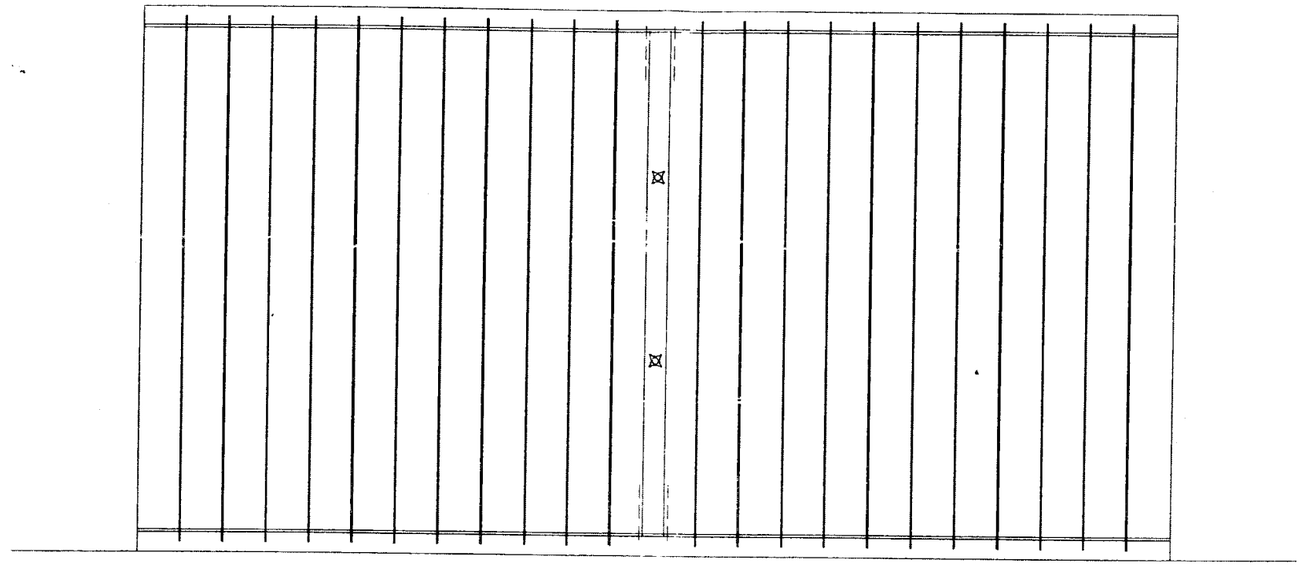

ELEVATION

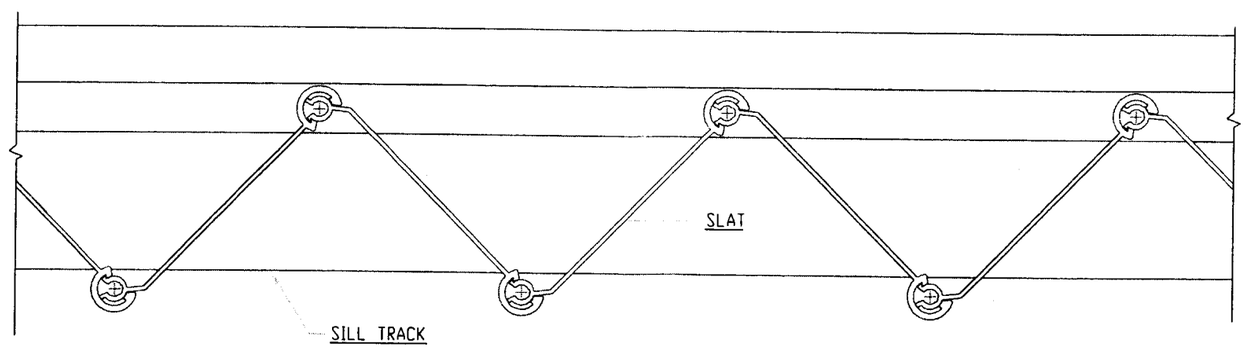

PLAN VIEW

PRODUCT RENEWED

ACCEPTANCE No. 01-0709.08

EXPIRATION DAT: 09/07/2006

By Helena A. Melo

PRODUCT CONTROL DIVISION
BUILDING CODE COMPLIANCE OFFICE

American Consulting Engineers Council Member
Supporting Excellence in Engineering

JENKINS & CHARLAND
INCORPORATED
Consulting Engineers
3559 N.W. 53rd Street
FORT LAUDERDALE, FL 33309
(305) 484-7777

TO THE BEST OF MY KNOWLEDGE AND ABILITY THE COMPLETED STRUCTURE DEPICTED ON THESE PLANS COMPLIES WITH THE APPLICABLE MINIMUM BUILDING CODES.

PROF. ENGINEER
GENE S. SANDERS
FLA. PE # 26590

SEP 5 2001

PRODUCT REVISED
as complying with the Florida Building Code
Acceptance No. 02-0426.05
Expiration Date 09/07/06
By
Miami Dade Product Control Division

BERNARDO SHUTTER CORPORATION
POMPANO BEACH, FLORIDA 33060

SCALE:	DRAWING NUMBER	DRAWN BY: VICKERY
DATE: 4-14-95	95-100	REVISED: 8-14-01
		REVISED: 6-5-95
		REVISED: 6-17-96
		REVISED: 11-18-96
		PAGE NUMBER 2 OF 11

PLAN & ELEVATION

COMPONENTS

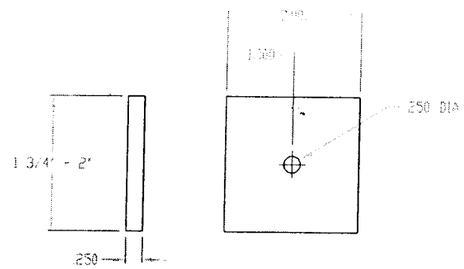

REINFORCING CLEAT
ALUM. 2" WIDE 1/4" THK.
ALLOY- 6061-T6

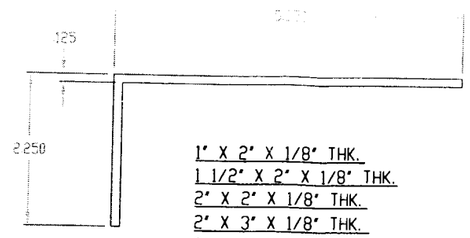

1" X 2" X 1/8" THK.
1 1/2" X 2" X 1/8" THK.
2" X 2" X 1/8" THK.
2" X 3" X 1/8" THK.
2" X 4" X 1/8" THK.
2 1/4" x 5 1/4"X 1/8" THK.

ALUMINUM ANGLE
ALLOY-6063-T5

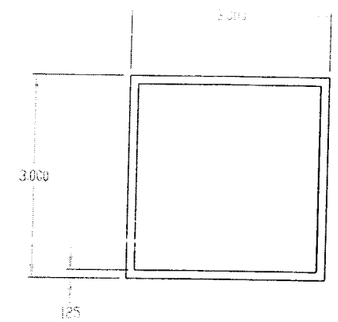

2" X 2" X 1/8" THK.
2" X 3" X 1/8" THK.
2" X 4" X 1/8" THK.
3" X 3" X 1/8" THK.
4" X 4" X 1/8" THK.

ALUMINUM TUBE
ALLOY-6063-T5

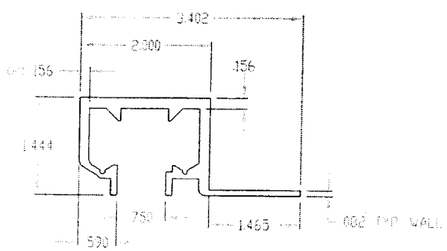

4" BLADE REGULAR TRACK
ALLOY-6063-T5

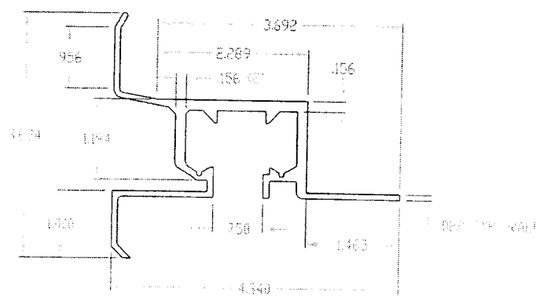

4" BLADE WALL MOUNT HEADER
ALLOY-6063-T5

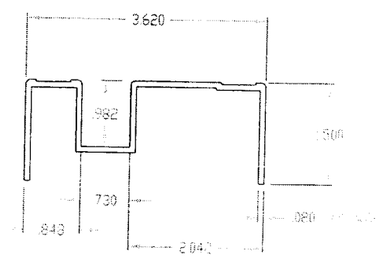

SILL TRACK
ALLOY-6063-T5

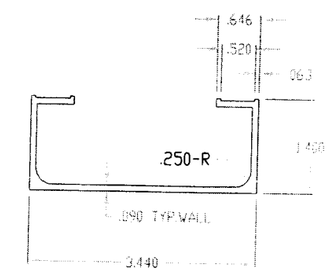

LEVELING CHANNEL
ALLOY-6063-T6

PRODUCT RENEWED
ACCEPTANCE No. 01-0709.08
EXPIRATION DATE 09/07/2006
By Helmy A. Malin
PRODUCT CONTROL DIVISION
BUILDING CODE COMPLIANCE OFFICE

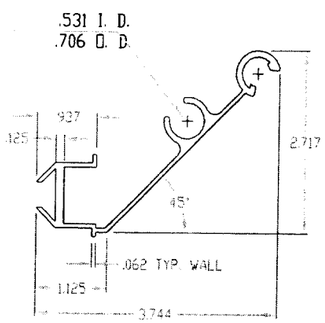

MALE CENTER LOCK
ALLOY-6063-T6

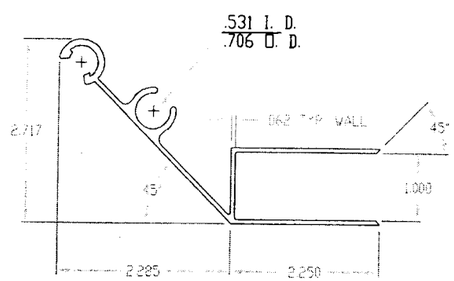

FEMALE CENTER LOCK
ALLOY-6063-T6

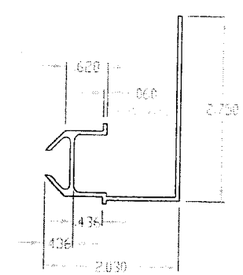

MALE SIDE LOCK
ALLOY-6063-T5

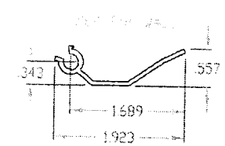

END SLAT
ALLOY-6063-T5

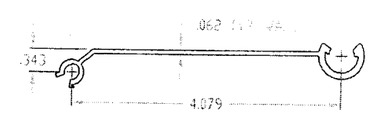

4" ACCORDION SLAT
ALLOY-6063-T6

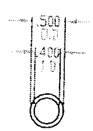

LOCK PIN
LENGTH VARIES
ALLOY-6063-T5

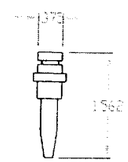

LOCK PIN INSERT
ALLOY-6063-T5

American Consulting Engineers Council Member
Supporting Excellence in Engineering

JENKINS & CHARLAND INCORPORATED
Consulting Engineers
3559 N.W. 53rd Street
FORT LAUDERDALE, FL 33309
(305) 484-7777

TO THE BEST OF MY KNOWLEDGE AND ABILITY THE COMPLETED STRUCTURE DEPICTED ON THESE PLANS COMPLIES WITH THE APPLICABLE MINIMUM BUILDING CODES

PROF. ENGINEER
GENE S. SANDERS
FLA. PE # 26590
SEP 5 2001

PRODUCT REVISED
as complying with the Florida Building Code
Acceptance No. 02-0426.05
Expiration Date 09/07/06
By
Miami Dade Product Control Division

BERNARDO SHUTTER CORPORATION
POMPANO BEACH, FLORIDA 33060

SCALE:	DRAWING NUMBER	REVISED: 8-14-01
DATE: 4-14-95	95-100	DRAWN BY: VICKERY
		REVISED: 6-5-95
		REVISED: 6-17-96
		REVISED: 11-18-96
COMPONENTS		PAGE NUMBER 3 OF 11

4" ACCORDION SLAT

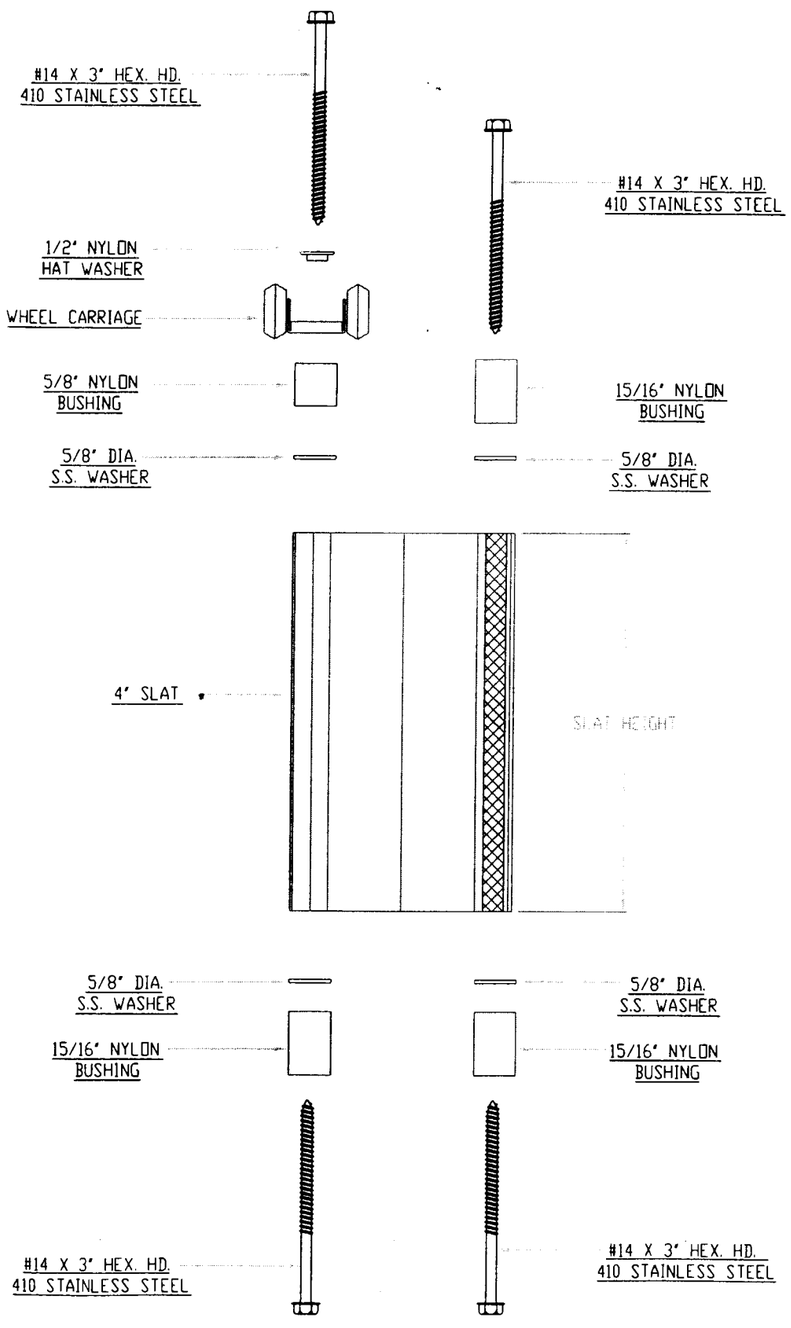

SLAT HEIGHT	DESIGN LOAD (PSF)
0 - 72"	±240
73" - 97"	±220
98" - 113"	±166
114" - 129"	±134
130" - 144"	±87

PRODUCT RENEWED
ACCEPTANCE No. 01-0709-08
EXPIRATION DATE 09/07/2006
By [signature]
PRODUCT CONTROL DIVISION
BUILDING CODE COMPLIANCE OFFICE

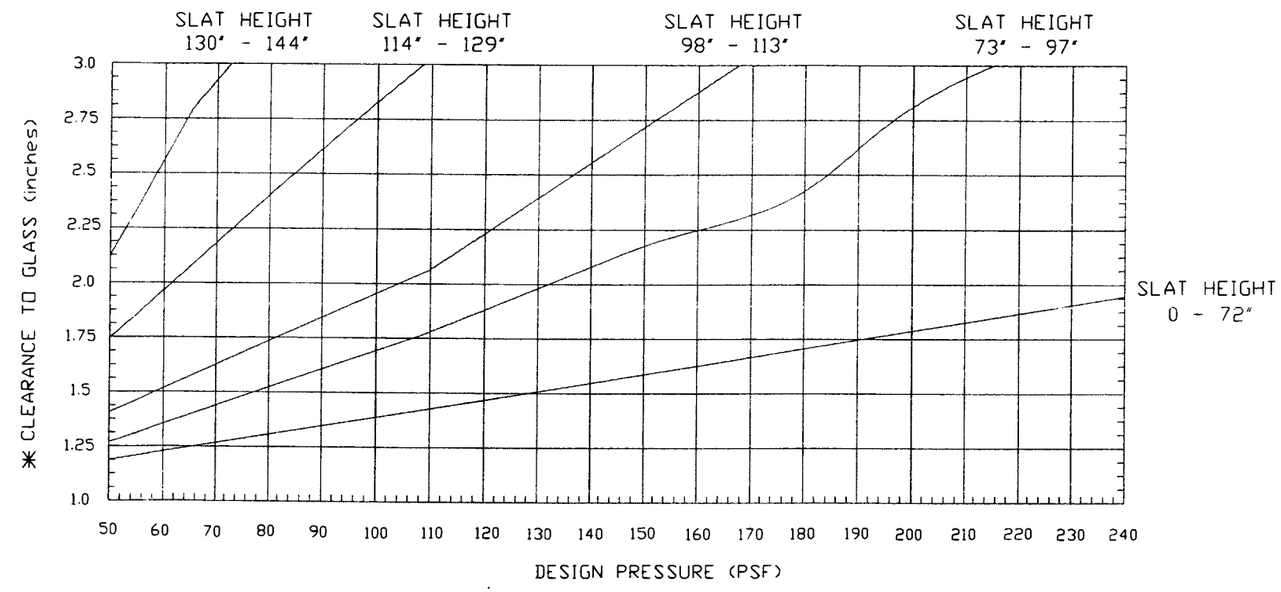

NOTE:

* CLEARANCE TO GLASS (inches)
INCLUDES THE 1" MINIMUM DISTANCE REQUIRED AT DESIGN LOAD.

0 -30' ELEVATION
MINIMUM CLEARANCE TO GLASS IS 3 1/2" ABOVE 30' REFER TO GRAPH ABOVE

American Consulting Engineers Council Member
Supporting Excellence in Engineering

JENKINS & CHARLAND INCORPORATED
3559 N.W. 53rd Street
FORT LAUDERDALE, FL 33309
(305) 484-7777

TO THE BEST OF MY KNOWLEDGE AND ABILITY, THE COMPLETED STRUCTURE DEPICTED ON THESE PLANS COMPLIES WITH THE APPLICABLE MINIMUM BUILDING CODES.

PROF. ENGINEER
GENE S. SANDERS
FLA. PE # 26590
SEP 5 2001

PRODUCT REVISED
as complying with the Florida Building Code
Acceptance No. 02-0426.05
Expiration Date 09/07/06
By [signature]
Miami Dade Product Control Division

BERNARDO SHUTTER CORPORATION
POMPANO BEACH, FLORIDA 33060

SCALE:	DRAWING NUMBER	DRAWN BY: VICKERY
DATE: 4-14-95	95-100	REVISED: 6-5-95
		REVISED: 6-17-96
		REVISED: 11-18-96
		PAGE NUMBER 4 OF 11

REVISED: 8-14-01

4" ACCORDIAN SLAT

TRACK MOUNTING CONNECTIONS

1 ANGLE BUILD-OUT HEADER

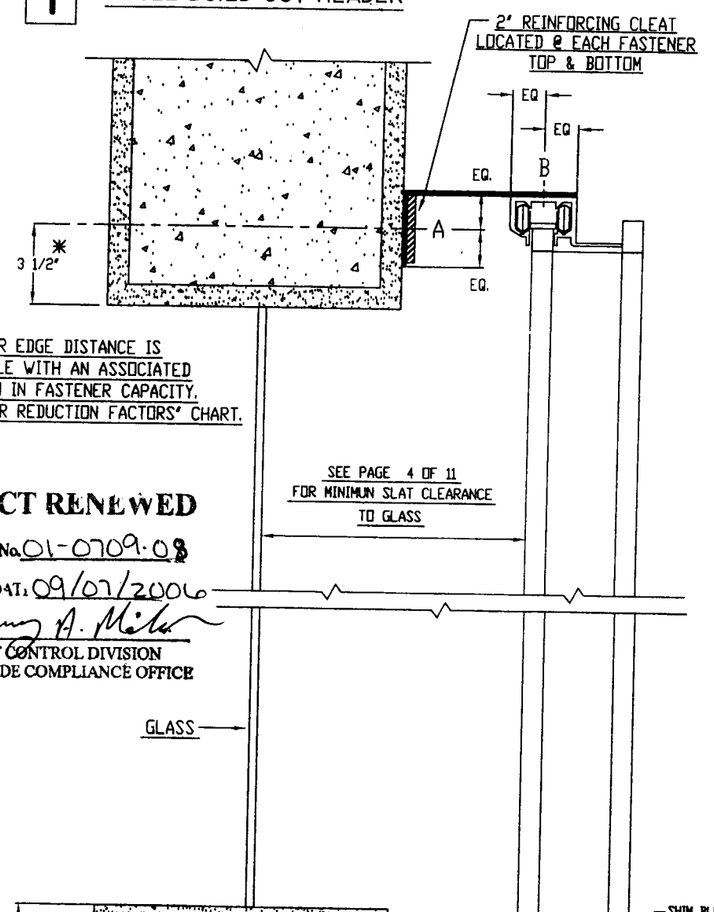

✳ SMALLER EDGE DISTANCE IS ACCEPTABLE WITH AN ASSOCIATED REDUCTION IN FASTENER CAPACITY. SEE "FASTENER REDUCTION FACTORS" CHART.

PRODUCT RENEWED
ACCEPTANCE No. 01-0709.03
EXPIRATION DAT: 09/07/2006
By Helmy A. Miler
PRODUCT CONTROL DIVISION
BUILDING CODE COMPLIANCE OFFICE

APPROVED FASTENERS

FASTENER "A"

MANUF.	TYPE	DIA.	IMBED.
RAWL	TAPPER	.25	1.25
RAWL	CALK-IN	.25	.875
RAMSET	TAPCON	.25	1.25
RAMSET	NON-DRILL	1/4-20	1.125
WOOD	S.S. SCR	#14	2"

FASTENER "B"

MANUF.	TYPE	DIA.	HEIGHT
BOLT & NUT	18-8 S.S. STEEL	1/4-20	.75

2 ANGLE BUILD-OUT SILL

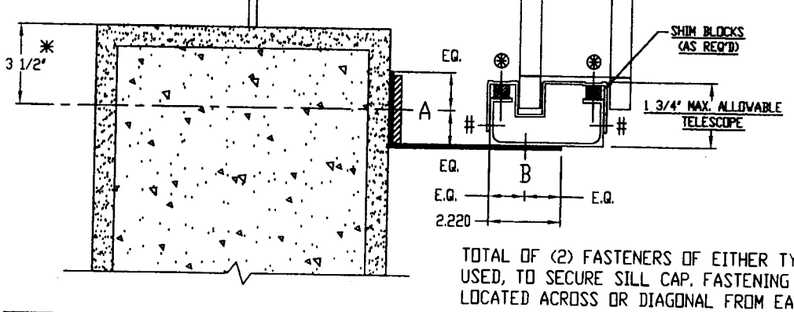

TOTAL OF (2) FASTENERS OF EITHER TYPE CAN BE USED, TO SECURE SILL CAP. FASTENING MUST BE LOCATED ACROSS OR DIAGONAL FROM EACH OTHER.

FASTENERS:
AD-66-ABC POP RIVET (16" O.C.)
⊛ #10 X 1" S.S.TRUSS HEAD (16" O.C.)

FASTENER SPACING IN MASONRY/CONCRETE

CHARTS ARE BASED ON TYPICAL EDGE DISTANCE OF 3 1/2" [12dia. + 1/2" FOR STUCCO ALLOWANCE (SA).]

SPACING VALUES FOR INTERMEDIATE SLAT HEIGHTS & WIND PRESSURES MAY BE INTERPOLATED.

MASONRY

SLAT HEIGHT	DESIGN WIND PRESSURE psf 40	60	80	100	150	200	240
	FASTENER "A" SPACING						
60	10.8	7.2	5.4	4.3	2.9	--	--
72	9.0	6.0	4.5	3.6	--	--	--
97	6.7	4.4	3.3	2.7	--	--	--
113	5.7	3.8	2.9	--	--	--	--
129	5.0	3.3	2.5	--	--	--	--
144	4.5	3.0	--	--	--	--	--

CONCRETE f'c3

SLAT HEIGHT	DESIGN WIND PRESSURE psf 40	60	80	100	150	200	240
	FASTENER "A" SPACING						
60	24.0	24.0	24.0	21.2	14.2	10.6	8.9
72	24.0	24.0	22.1	17.7	11.8	8.9	7.4
97	24.0	21.9	16.4	13.1	8.8	6.6	5.5
113	24.0	18.8	14.1	11.3	7.5	5.6	--
129	24.0	16.5	12.4	9.9	6.6	--	--
144	22.1	14.8	11.1	8.9	--	--	--

REDUCED EDGE DISTANCE FASTENER SPACING IN MASONRY/CONCRETE

CHARTS ARE BASED ON REDUCED EDGE DISTANCE OF 1 3/4" [6dia. + 1/2" FOR STUCCO ALLOWANCE (SA).]

MASONRY

SLAT HEIGHT	DESIGN WIND PRESSURE psf 40	60	80	100	150	200	240
	FASTENER "A" SPACING						
60	5.4	3.6	2.7	--	--	--	--
72	4.5	3.0	--	--	--	--	--
97	3.3	--	--	--	--	--	--
113	2.8	--	--	--	--	--	--
129	2.5	--	--	--	--	--	--
144	--	--	--	--	--	--	--

CONCRETE f'c3

SLAT HEIGHT	DESIGN WIND PRESSURE psf 40	60	80	100	150	200	240
	FASTENER "A" SPACING						
60	24.0	17.7	13.3	10.6	7.1	5.3	4.4
72	22.1	14.7	11.0	8.8	5.9	4.4	3.7
97	16.4	10.9	8.2	6.5	4.4	3.3	2.7
113	14.1	9.4	7.0	5.6	3.7	2.8	--
129	12.3	8.2	6.2	4.9	3.3	--	--
144	11.0	7.4	5.5	4.4	--	--	--

WOOD

SLAT HEIGHT	DESIGN WIND PRESSURE psf 40	60	80
	FASTENER "A" SPACING		
60	24.0	19.4	14.6
72	24.0	16.2	12.1
97	18.0	12.0	9.0
113	15.5	10.3	7.7
129	13.5	9.0	6.8
144	12.1	8.1	6.1

FASTENER "B"

SLAT HEIGHT	DESIGN WIND PRESSURE psf 40	60	80	100	150	200	240
	FASTENER "B" SPACING						
60	24.0	24.0	24.0	24.0	19.5	14.6	12.2
72	24.0	24.0	24.0	24.0	16.3	12.2	10.2
97	24.0	24.0	22.6	18.1	12.1	9.1	7.5
113	24.0	24.0	19.4	15.6	10.4	7.8	--
129	24.0	22.7	17.0	13.6	9.1	--	--
144	24.0	20.3	15.3	12.2	--	--	--

American Consulting Engineers Council Member
Supporting Excellence in Engineering

JENKINS & CHARLAND
3339 N.W. 53rd Street
FORT LAUDERDALE, FL 33309
(305) 484-7777

TO THE BEST OF MY KNOWLEDGE AND ABILITY, THE COMPLETED STRUCTURE REFLECTED ON THESE PLANS COMPLIES WITH THE APPLICABLE MINIMUM BUILDING CODES.

PROF. ENGINEER
GENE S. SANDERS
FLA. PE # 26590

SEP 5 2001

PRODUCT REVISED
as complying with the Florida Buiding Code
Acceptance No. 02-0426.05
Expiration Date 09/07/06
By
Miami Dade Product Control Division

BERNARDO SHUTTER CORPORATION
POMPANO BEACH, FLORIDA 33060

SCALE:
DATE: 4-14-95
DRAWING NUMBER 95-100
DRAWN BY: VICKERY
REVISED 8-14-01
REVISED 6-5-95
REVISED 6-17-96
REVISED 11-18-96
PAGE NUMBER 5 OF 11

TRACK MOUNTING CONNECTION

TRACK MOUNTING CONNECTIONS

1A ANGLE BUILD-OUT HEADER REVERSE

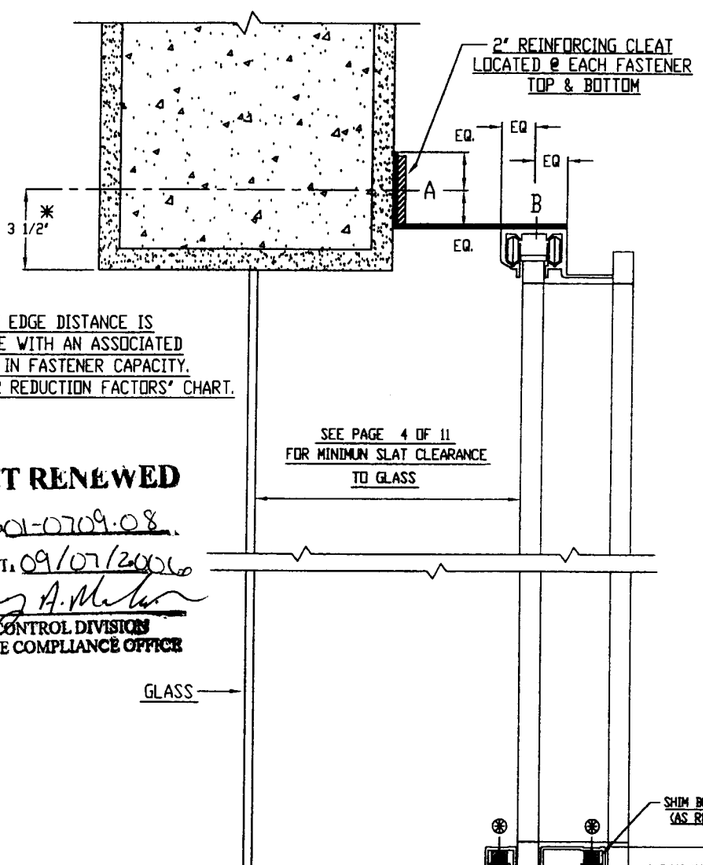

✱ SMALLER EDGE DISTANCE IS ACCEPTABLE WITH AN ASSOCIATED REDUCTION IN FASTENER CAPACITY. SEE 'FASTENER REDUCTION FACTORS' CHART.

PRODUCT RENEWED
ACCEPTANCE No. 01-0709.08
EXPIRATION DATE 09/07/2006
By Helmy A. Mahar
PRODUCT CONTROL DIVISION
BUILDING CODE COMPLIANCE OFFICE

APPROVED FASTENERS

FASTENER "A"

MANUF.	TYPE	DIA.	IMBED.
RAWL	TAPPER	.25	1.25
RAWL	CALK-IN	.25	.875
RAMSET	TAPCON	.25	1.25
RAMSET	NON-DRILL	1/4-20	1.125
WOOD	S.S. SCR	#14	2"

FASTENER "B"

MANUF.	TYPE	DIA.	HEIGHT
BOLT & NUT	18-8 S.S. STEEL	1/4-20	.75

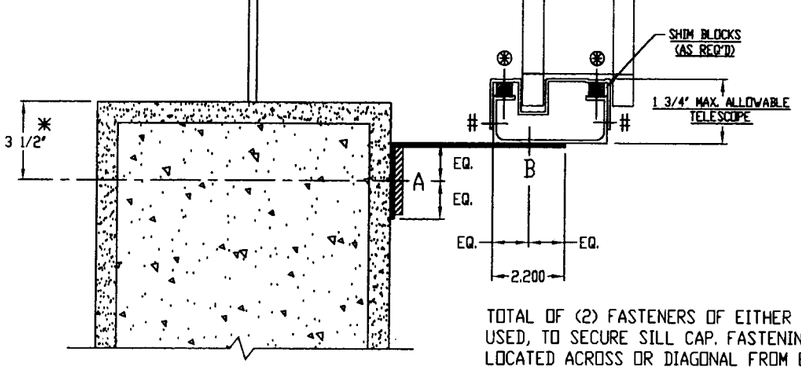

TOTAL OF (2) FASTENERS OF EITHER TYPE CAN BE USED, TO SECURE SILL CAP. FASTENING MUST BE LOCATED ACROSS OR DIAGONAL FROM EACH OTHER.

FASTENERS:
AD-66-ABC POP RIVET (16" O.C.)
⊛ #10 X 1" S.S.TRUSS HEAD (16" O.C.)

2A ANGLE BUILD-OUT SILL

FASTENER SPACING IN MASONRY/CONCRETE

CHARTS ARE BASED ON TYPICAL EDGE DISTANCE OF 3 1/2" [12dia. + 1/2" FOR STUCCO ALLOWANCE (SA).]

SPACING VALUES FOR INTERMEDIATE SLAT HEIGHTS & WIND PRESSURES MAY BE INTERPOLATED.

MASONRY

SLAT HEIGHT	DESIGN WIND PRESSURE psf 40	60	80	100	150	200	240
	FASTENER 'A' SPACING						
60	4.4	3.1	--	--	--	--	--
72	3.7	2.6	--	--	--	--	--
97	2.7	--	--	--	--	--	--
113	--	--	--	--	--	--	--
129	--	--	--	--	--	--	--
144	--	--	--	--	--	--	--

CONCRETE f'c3

SLAT HEIGHT	DESIGN WIND PRESSURE psf 40	60	80	100	150	200	240
	FASTENER 'A' SPACING						
60	21.9	15.2	11.6	9.4	6.4	4.8	4.1
72	18.3	12.7	9.7	7.9	5.3	4.0	3.4
97	13.6	9.4	7.2	5.8	4.0	3.0	2.5
113	11.6	8.1	6.2	5.0	3.4	2.6	--
129	10.2	7.1	5.4	4.4	3.0	--	--
144	9.1	6.3	4.9	3.9	--	--	--

REDUCED EDGE DISTANCE FASTENER SPACING IN CONCRETE

CHARTS ARE BASED ON REDUCED EDGE DISTANCE OF 1 3/4" [6dia. + 1/2" FOR STUCCO ALLOWANCE (SA).]

CONCRETE f'c3

SLAT HEIGHT	DESIGN WIND PRESSURE psf 40	60	80	100	150	200	240
	FASTENER 'A' SPACING						
60	10.9	7.6	5.8	4.7	3.2	--	--
72	9.1	6.3	4.8	3.8	2.6	--	--
97	6.8	4.7	3.6	2.9	--	--	--
113	5.8	4.0	3.1	2.5	--	--	--
129	5.1	3.5	2.7	--	--	--	--
144	4.5	3.1	--	--	--	--	--

SPECIAL CONDITION

2 1/4" X 5 1/4" X 1/8"
(REVERSED ANGLE BUILD-OUT)

MAXIMUM ALLOWABLE FASTENER SPACING IS LIMITED TO THE FOLLOWING:

HEIGHT	SPACING
0 - 112"	24"
113"	23.9
129"	20.9
144"	18.7

THESE LIMITS SHOULD BE APPLIED AFTER STANDARD SPACING HAS BEEN DETERMINED AND ANY FACTORING FOR REDUCED EDGE DISTANCE, IF APPLICABLE, HAS TAKEN PLACE.

WOOD

SLAT HEIGHT	DESIGN WIND PRESSURE psf 40	60	80
	FASTENER 'A' SPACING		
60	12.0	8.3	6.4
72	10.0	7.0	5.3
97	7.4	5.2	4.0
113	6.4	4.4	3.4
129	5.6	3.9	3.0
144	5.0	3.5	2.7

FASTENER "B"

SLAT HEIGHT	DESIGN WIND PRESSURE psf 40	60	80	100	150	200	240
	FASTENER 'B' SPACING						
60	24.0	24.0	24.0	24.0	19.5	14.6	12.2
72	24.0	24.0	24.0	24.0	16.3	12.2	10.2
97	24.0	24.0	22.6	18.1	12.1	9.1	7.5
113	24.0	24.0	19.4	15.6	10.4	7.8	--
129	24.0	22.7	17.0	13.6	9.1	--	--
144	24.0	20.3	15.3	12.2	--	--	--

American Consulting Engineers Council Member
Supporting Excellence in Engineering

JENKINS & CHARLAND
3529 N.W. 53rd Street
FORT LAUDERDALE, FL 33309
(305) 484-7777
TO THE BEST OF MY KNOWLEDGE AND ABILITY, THE COMPLETED STRUCTURE REFLECTED ON THESE PLANS COMPLIES WITH THE APPLICABLE MINIMUM BUILDING CODES.

PROF. ENGINEER
GENE S. SANDERS
FLA. PE # 26590

SEP 5 2001

PRODUCT REVISED
as complying with the Florida Building Code
Acceptance No. 02-0426.05
Expiration Date 09/07/06
By
Miami Dade Product Control Division

BERNARDO SHUTTER CORPORATION
POMPANO BEACH, FLORIDA 33060

SCALE:	DRAWING NUMBER	DRAWN BY: VICKERY
DATE: 4-14-95	95-100	REVISED 6-5-95
TRACK MOUNTING CONNECTION		REVISED 6-17-96
		REVISED 11-18-96
		PAGE NUMBER 6 OF 11

REVISED 8-14-01

TRACK MOUNTING CONNECTIONS

3 CEILING MOUNT

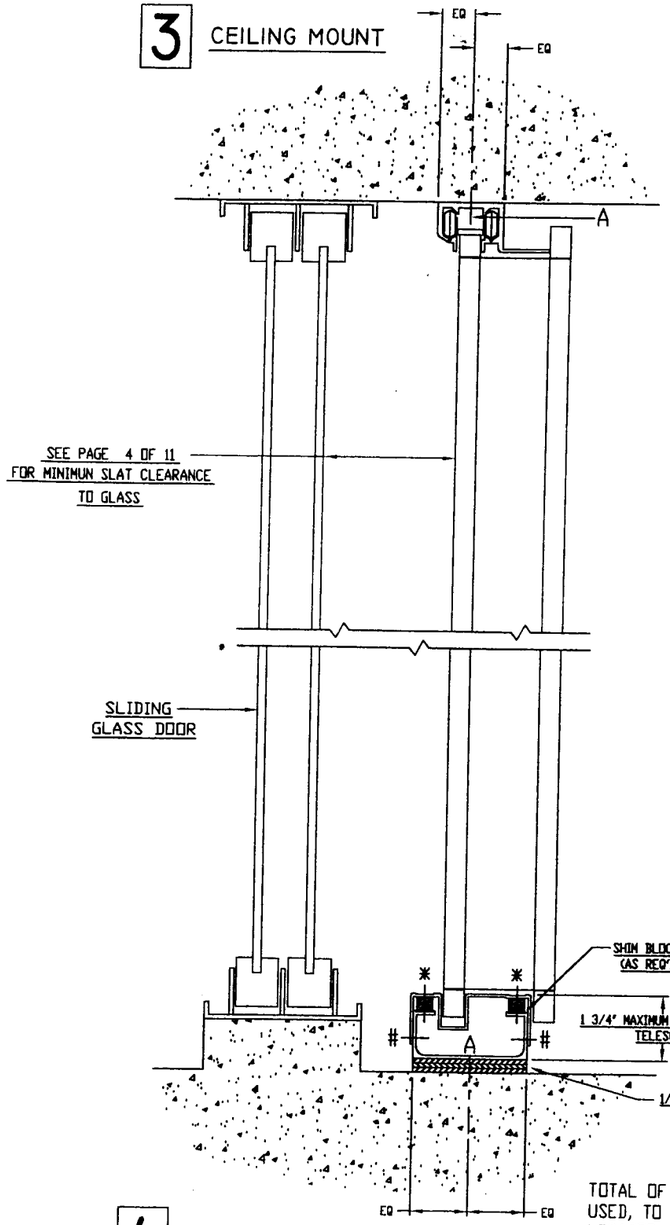

4 FLOOR MOUNT

TOTAL OF (2) FASTENERS OF EITHER TYPE CAN BE USED, TO SECURE SILL CAP. FASTENING MUST BE LOCATED ACROSS OR DIAGONAL FROM EACH OTHER.

FASTENERS:

AD-66-ABC POP RIVET (16" O.C.)

⊛ #10 X 1" S.S.TRUSS HEAD (16" O.C.)

APPROVED FASTENERS

FASTENER "A" & "B"

MANUF.	TYPE	DIA.	IMBED.
RAWL	TAPPER	.25	1.50
RAWL	CALK-IN	.25	.875
RAMSET	TAPCON	.25	1.50
RAMSET	NON-DRILL	1/4-20	1.125
WOOD	S.S. SCR	#14	2"

FASTENER SPACING IN MASONRY/CONCRETE

CHARTS ARE BASED ON TYPICAL EDGE DISTANCE OF 3 1/2" [12dia. + 1/2" FOR STUCCO ALLOWANCE (SA)]

SPACING VALUES FOR INTERMEDIATE SLAT HEIGHTS & WIND PRESSURES MAY BE INTERPOLATED.

MASONRY

SLAT HEIGHT (psf)	DESIGN WIND PRESSURE 40	60	80	100	150	200	240
	FASTENER "A" SPACING						
60	10.7	7.2	5.4	4.3	2.9	--	--
72	8.9	6.0	4.5	3.6	--	--	--
97	6.6	4.4	3.3	2.7	--	--	--
113	5.7	3.8	2.8	--	--	--	--
129	5.0	3.3	2.5	--	--	--	--
144	4.5	3.0	--	--	--	--	--

CONCRETE f'c3

SLAT HEIGHT (psf)	DESIGN WIND PRESSURE 40	60	80	100	150	200	240
	FASTENER "A" SPACING						
60	24.0	24.0	24.0	24.0	17.0	12.7	10.6
72	24.0	24.0	24.0	21.2	14.2	10.6	8.8
97	24.0	24.0	19.7	15.8	10.5	7.9	6.6
113	24.0	22.6	16.9	13.5	9.0	6.8	--
129	24.0	19.8	14.8	11.9	7.9	--	--
144	24.0	17.7	13.3	10.6	--	--	--

REDUCED EDGE DISTANCE FASTENER SPACING IN MASONRY/CONCRETE

CHARTS ARE BASED ON REDUCED EDGE DISTANCE OF 1 3/4" [6dia. + 1/2" FOR STUCCO ALLOWANCE (SA)]

MASONRY

SLAT HEIGHT (psf)	DESIGN WIND PRESSURE 40	60	80	100	150	200	240
	FASTENER "A" SPACING						
60	5.3	3.6	2.7	--	--	--	--
72	4.4	3.0	--	--	--	--	--
97	3.3	--	--	--	--	--	--
113	2.8	--	--	--	--	--	--
129	2.5	--	--	--	--	--	--
144	--	--	--	--	--	--	--

CONCRETE f'c3

SLAT HEIGHT (psf)	DESIGN WIND PRESSURE 40	60	80	100	150	200	240
	FASTENER "A" SPACING						
60	24.0	21.2	15.9	12.7	8.5	6.3	5.6
72	24.0	17.7	13.2	10.6	7.1	5.3	4.4
97	19.7	13.1	9.8	7.9	5.2	3.9	3.3
113	16.9	11.3	8.4	6.7	4.5	3.4	--
129	14.8	9.9	7.4	5.9	3.9	--	--
144	13.2	8.8	6.6	5.3	--	--	--

WOOD

SLAT HEIGHT (psf)	DESIGN WIND PRESSURE 40	60	80
	FASTENER "A" SPACING		
60	22.0	14.7	11.0
72	18.3	12.2	9.2
97	13.6	9.1	6.8
113	11.7	7.8	5.8
129	10.2	6.8	5.1
144	9.2	6.1	4.6

PRODUCT RENEWED

ACCEPTANCE No. 01-0709.08

EXPIRATION DAT. 09/07/2006

By Helmy A. Mola

PRODUCT CONTROL DIVISION
BUILDING CODE COMPLIANCE OFFICE

American Consulting Engineers Council Member
Supporting Excellence In Engineering

JENKINS & CHARLAND
2329 N.W. 33rd Street
FORT LAUDERDALE, FL 33309
(305) 484-7777
TO THE BEST OF MY KNOWLEDGE AND ABILITY, THE COMPLETED STRUCTURE REFLECTED ON THESE PLANS COMPLIES WITH THE APPLICABLE MINIMUM BUILDING CODES.

PROF. ENGINEER
GENE S. SANDERS
FLA. PE # 26590

SEP 5 2001

PRODUCT REVISED
as complying with the Florida Building Code
Acceptance No. 02-0426.05
Expiration Date 09/07/06
By
Miami Dade Product Control Division

BERNARDO SHUTTER CORPORATION
POMPANO BEACH, FLORIDA 33060

SCALE:
DATE: 4-14-95
DRAWING NUMBER 95-100
DRAWN BY: VICKERY
REVISED 8-14-01
REVISED 6-5-95
REVISED 6-17-96
REVISED 11-18-96
PAGE NUMBER 7 OF 11

TRACK MOUNTING CONNECTION 3 & 4

TRACK MOUNTING CONNECTIONS

5 FLUSH MOUNT TOP

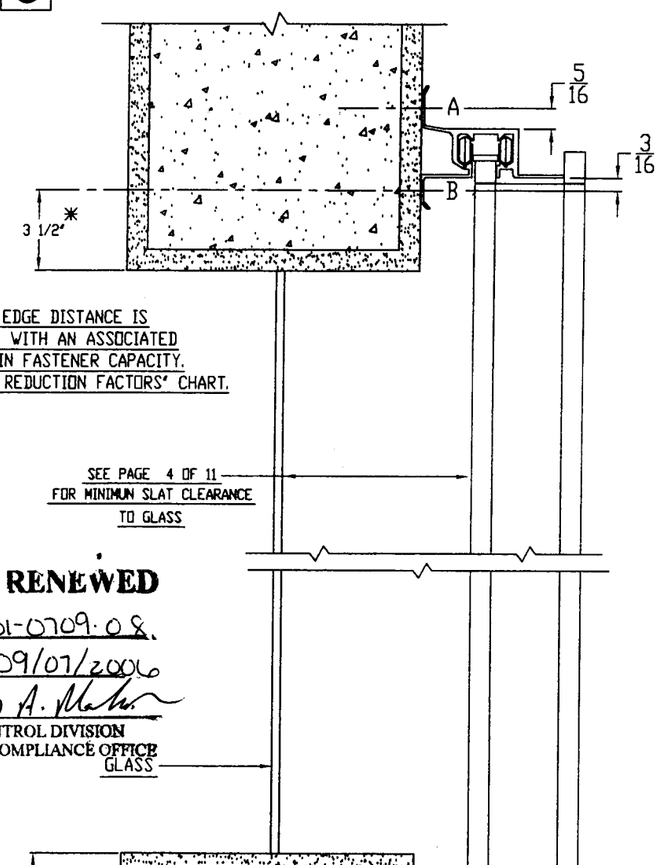

* SMALLER EDGE DISTANCE IS ACCEPTABLE WITH AN ASSOCIATED REDUCTION IN FASTENER CAPACITY. SEE 'FASTENER REDUCTION FACTORS' CHART.

SEE PAGE 4 OF 11 FOR MINIMUN SLAT CLEARANCE TO GLASS

GLASS

PRODUCT RENEWED

ACCEPTANCE No. 01-0709.08

EXPIRATION DATE 09/07/2006

By [signature]

PRODUCT CONTROL DIVISION
BUILDING CODE COMPLIANCE OFFICE

6 FLUSH MOUNT BOTTOM

APPROVED FASTENERS

FASTENER "A" & "B"

MANUF.	TYPE	DIA.	IMBED.
RAWL	TAPPER	.25	1.50
RAWL	CALK-IN	.25	.875
RAMSET	TAPCON	.25	1.50
RAMSET	NON-DRILL	1/4-20	1.125
WOOD	S.S. SCR	#14	2"

FASTENER SPACING IN MASONRY/CONCRETE

CHARTS ARE BASED ON TYPICAL EDGE DISTANCE OF 3 1/2" [12dia. + 1/2" FOR STUCCO ALLOWANCE (SA).]

SPACING VALUES FOR INTERMEDIATE SLAT HEIGHTS & WIND PRESSURES MAY BE INTERPOLATED.

MASONRY

SLAT HEIGHT	DESIGN WIND PRESSURE psf 40	60	80	100	150	200	240
	FASTENER 'A' SPACING						
60	24.0	24.0	24.0	24.0	21.1	15.9	13.3
72	24.0	24.0	24.0	24.0	17.6	13.3	11.1
97	24.0	24.0	24.0	19.6	13.1	9.9	8.3
113	24.0	24.0	20.9	16.8	11.3	8.5	--
129	24.0	24.0	18.4	14.8	9.9	--	--
144	24.0	21.8	16.5	13.2	--	--	--
	FASTENER 'B' SPACING						
60	23.4	15.7	11.8	9.5	6.3	4.8	4.0
72	19.5	13.1	9.7	7.9	5.3	4.0	3.3
97	14.6	9.8	7.3	5.9	3.9	3.0	2.5
113	12.5	8.4	6.3	5.1	3.4	2.5	--
129	11.0	7.4	5.5	4.4	3.0	--	--
144	9.9	6.6	5.0	4.0	--	--	--

CONCRETE f'c3

SLAT HEIGHT	DESIGN WIND PRESSURE psf 40	60	80	100	150	200	240
	FASTENER 'A' SPACING						
60	24.0	24.0	24.0	24.0	24.0	24.0	24.0
72	24.0	24.0	24.0	24.0	24.0	24.0	24.0
97	24.0	24.0	24.0	24.0	24.0	24.0	24.0
113	24.0	24.0	24.0	24.0	24.0	24.0	--
129	24.0	24.0	24.0	24.0	24.0	--	--
144	24.0	24.0	24.0	24.0	--	--	--
	FASTENER 'B' SPACING						
60	24.0	24.0	24.0	24.0	24.0	24.0	24.0
72	24.0	24.0	24.0	24.0	24.0	24.0	22.1
97	24.0	24.0	24.0	24.0	24.0	19.7	16.4
113	24.0	24.0	24.0	24.0	22.5	16.9	--
129	24.0	24.0	24.0	24.0	19.7	--	--
144	24.0	24.0	24.0	24.0	--	--	--

REDUCED EDGE DISTANCE FASTENER SPACING IN MASONRY/CONCRETE

CHARTS ARE BASED ON REDUCED EDGE DISTANCE OF 1 3/4" [6dia. + 1/2" FOR STUCCO ALLOWANCE (SA).]

MASONRY

SLAT HEIGHT	DESIGN WIND PRESSURE psf 40	60	80	100	150	200	240
	FASTENER 'A' SPACING						
60	24.0	24.0	19.4	15.6	10.5	7.9	6.6
72	24.0	21.4	16.0	13.1	8.8	6.6	5.5
97	23.5	16.0	12.1	9.8	6.5	4.9	4.1
113	20.3	13.8	10.4	8.4	5.6	4.2	--
129	17.8	12.1	9.2	7.4	4.9	--	--
144	16.0	10.9	8.2	6.6	--	--	--
	FASTENER 'B' SPACING						
60	11.7	7.8	5.9	4.7	3.1	--	--
72	9.7	6.5	4.8	3.9	2.6	--	--
97	7.3	4.9	3.6	2.9	--	--	--
113	6.2	4.2	3.1	2.5	--	--	--
129	5.5	3.7	2.7	--	--	--	--
144	4.9	3.3	2.5	--	--	--	--

CONCRETE f'c3

SLAT HEIGHT	DESIGN WIND PRESSURE psf 40	60	80	100	150	200	240
	FASTENER 'A' SPACING						
60	24.0	24.0	24.0	24.0	24.0	24.0	24.0
72	24.0	24.0	24.0	24.0	24.0	24.0	24.0
97	24.0	24.0	24.0	24.0	24.0	24.0	24.0
113	24.0	24.0	24.0	24.0	24.0	24.0	--
129	24.0	24.0	24.0	24.0	24.0	--	--
144	24.0	24.0	24.0	24.0	--	--	--
	FASTENER 'B' SPACING						
60	24.0	24.0	24.0	24.0	21.1	15.8	13.2
72	24.0	24.0	24.0	24.0	17.6	13.2	11.0
97	24.0	24.0	24.0	19.6	13.1	9.8	8.2
113	24.0	24.0	21.0	16.8	11.2	8.4	--
129	24.0	24.0	18.4	14.7	9.8	--	--
144	24.0	21.9	16.5	13.2	--	--	--

WOOD

SLAT HEIGHT	DESIGN WIND PRESSURE psf 40	60	80
	FASTENER 'A' SPACING		
60	24.0	24.0	24.0
72	24.0	24.0	24.0
97	24.0	24.0	24.0
113	24.0	24.0	24.0
129	24.0	24.0	24.0
144	24.0	24.0	24.0
	FASTENER 'B' SPACING		
60	24.0	24.0	24.0
72	24.0	24.0	24.0
97	24.0	24.0	19.5
113	24.0	22.1	16.7
129	24.0	19.4	14.7
144	24.0	17.3	13.1

American Consulting Engineers Council Member
Supporting Excellence In Engineering

JENKINS & CHARLAND
2339 N.W. 33rd Street
FORT LAUDERDALE, FL 33309
(305) 484-7777

TO THE BEST OF MY KNOWLEDGE AND ABILITY, THE COMPLETED STRUCTURE REFLECTED ON THESE PLANS COMPLIES WITH THE APPLICABLE MINIMUM BUILDING CODES.

PROF. ENGINEER
GENE S. SANDERS
FLA PE # 26590

SEP 5 2001

PRODUCT REVISED
as complying with the Florida Buiding Code
Acceptance No. 02-0426.05
Expiration Date 09/07/06
By [signature]
Miami Dade Product Control Division

BERNARDO SHUTTER CORPORATION
POMPANO BEACH, FLORIDA 33060

SCALE:	DRAWING NUMBER	DRAWN BY: VICKERY
DATE: 4-14-95	95-100	REVISED: 6-5-95
		REVISED: 6-17-96
		REVISED: 11-18-96
		REVISED: 8-14-01
		PAGE NUMBER 8 OF 11

TRACK MOUNTING CONNECTION 5 & 6

REMOVABLE TRACK

FASTENER SPACING IN CONCRETE

CHARTS ARE BASED ON TYPICAL EDGE DISTANCE OF 3 1/2"
[12dia. + 1/2" FOR STUCCO ALLOWANCE (SA).]

SPACING VALUES FOR INTERMEDIATE SLAT HEIGHTS & WIND PRESSURES MAY BE INTERPOLATED.

CONCRETE f'c3

SLAT HEIGHT	DESIGN WIND PRESSURE psf 40	60	80	100	150	200	240
	FASTENER "A" SPACING						
60	24.0	24.0	24.0	24.0	24.0	19.8	16.5
72	24.0	24.0	24.0	24.0	22.0	16.5	13.7
97	24.0	24.0	24.0	24.0	16.3	12.2	10.2
113	24.0	24.0	24.0	21.0	14.0	10.5	--
129	24.0	24.0	23.0	18.4	12.3	--	--
144	24.0	24.0	20.6	16.5	--	--	--

WOOD

SLAT HEIGHT	DESIGN WIND PRESSURE psf 40	60	80
	FASTENER "A" SPACING		
60	24.0	17.9	13.4
72	22.3	14.9	11.2
97	16.6*	11.1	8.3
113	14.2	9.5	7.1
129	12.5	8.3	6.2
144	11.2	7.4	5.6

REDUCED EDGE DISTANCE FASTENER SPACING IN CONCRETE

CHARTS ARE BASED ON REDUCED EDGE DISTANCE OF 1 3/4"
[6dia. + 1/2" FOR STUCCO ALLOWANCE (SA).]

CONCRETE f'c3

SLAT HEIGHT	DESIGN WIND PRESSURE psf 40	60	80	100	150	200	240
	FASTENER "A" SPACING						
60	24.0	24.0	24.0	19.8	13.2	9.9	8.2
72	24.0	24.0	20.6	16.5	11.0	8.2	6.8
97	24.0	20.4	15.3	12.2	8.1	6.1	5.1
113	24.0	17.5	13.1	10.5	7.0	5.2	--
129	23.0	15.3	23.0	9.2	6.1	--	--
144	20.6	13.7	10.3	8.2	--	--	--

APPROVED FASTENERS

FASTENER "A"

MANUF.	TYPE	DIA.	IMBED.
RAMSET	NON-DRILL	1/4-20	1.125
RAWL	CALK-IN	1/4-20	.875
	WOOD BUSHING	1/4-20	.875

7 REMOVABLE TRACK

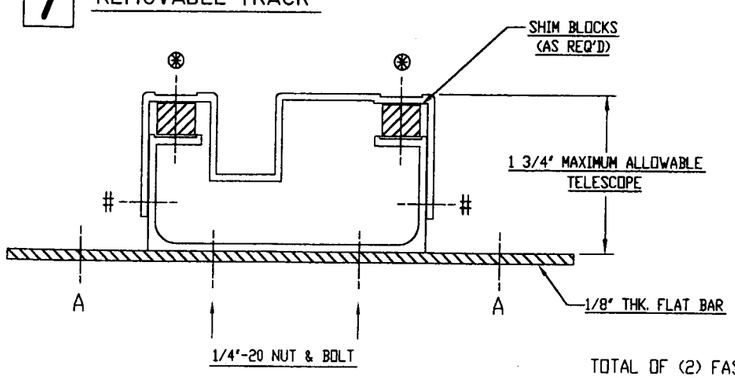

TOTAL OF (2) FASTENERS OF EITHER TYPE CAN BE USED, TO SECURE SILL CAP. FASTENING MUST BE LOCATED ACROSS OR DIAGONAL FROM EACH OTHER.

FASTENERS:
AD-66-ABC POP RIVET (16" O.C.)
⊛ #10 X 1" S.S.TRUSS HEAD (16" O.C.)

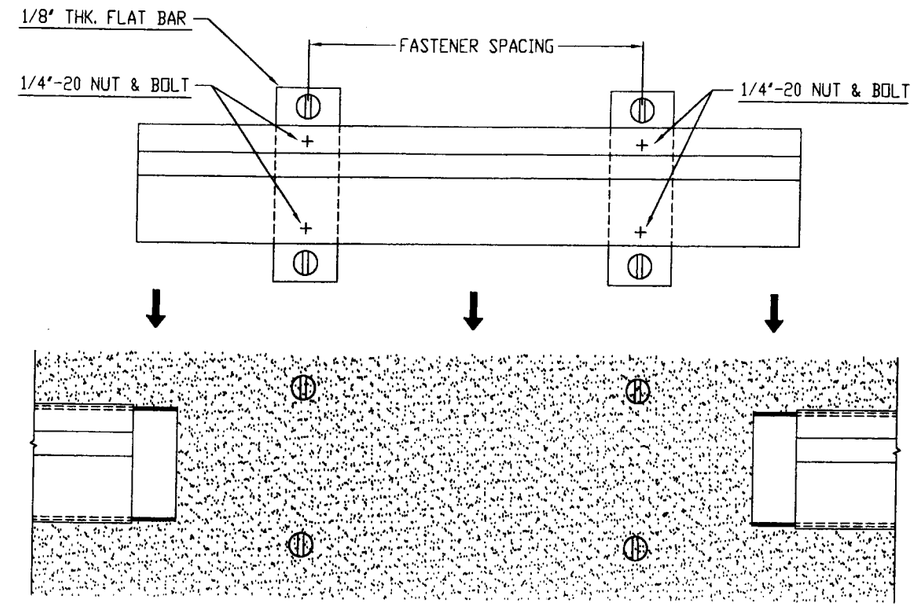

TOP VIEW

PRODUCT RENEWED
ACCEPTANCE No. 01-0709.08
EXPIRATION DAT. 09/07/2006
By
PRODUCT CONTROL DIVISION
BUILDING CODE COMPLIANCE OFFICE

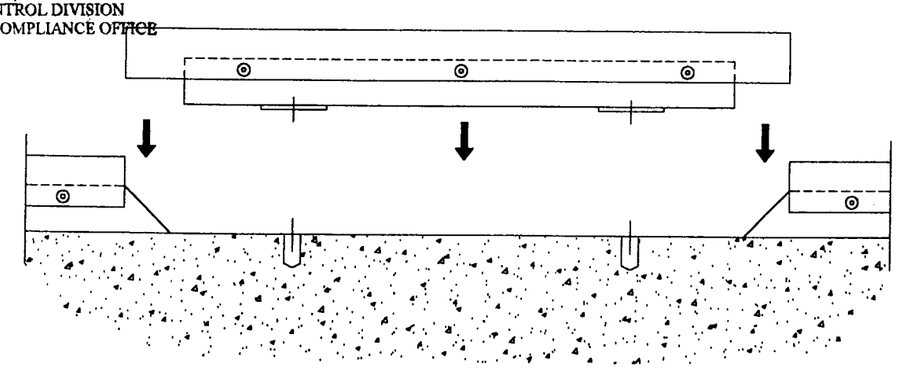

ELEVATION

American Consulting Engineers Council Member
Supporting Excellence in Engineering

JENKINS & CHARLAND
TO THE BEST OF MY KNOWLEDGE AND ABILITY, THE COMPLETED STRUCTURE REFLECTED ON THESE PLANS COMPLIES WITH THE APPLICABLE MINIMUM BUILDING CODES.

PROF. ENGINEER
GENE S. SANDERS
FLA. PE # 26590

SEP 5 2001

PRODUCT REVISED
as complying with the Florida Building Code
Acceptance No 02-0426.05
Expiration Date 09/07/06
By
Miami Dade Product Control Division

BERNARDO SHUTTER CORPORATION
POMPANO BEACH, FLORIDA 33060

SCALE:
DATE: 4-14-95
DRAWING NUMBER 95-100
DRAWN BY: VIDCERY
REVISED 8-14-01
REVISED 6-5-95
REVISED 6-17-96
REVISED 11-18-96
PAGE NUMBER 9 OF 11

REMOVABLE TRACK

CORNER MULLION OPTIONS & END SLAT FASTENING

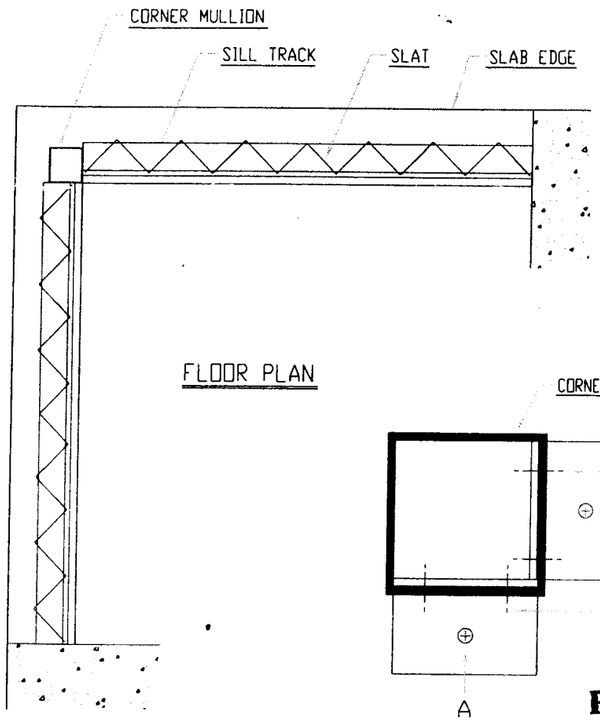

FLOOR PLAN

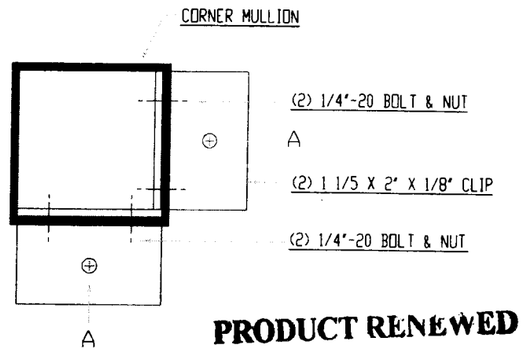

CORNER MULLION

PRODUCT RENEWED
ACCEPTANCE No. 01-0709.08
EXPIRATION DATE 09/07/2006
By Helmy A. Mehr
PRODUCT CONTROL DIVISION
BUILDING CODE COMPLIANCE OFFICE

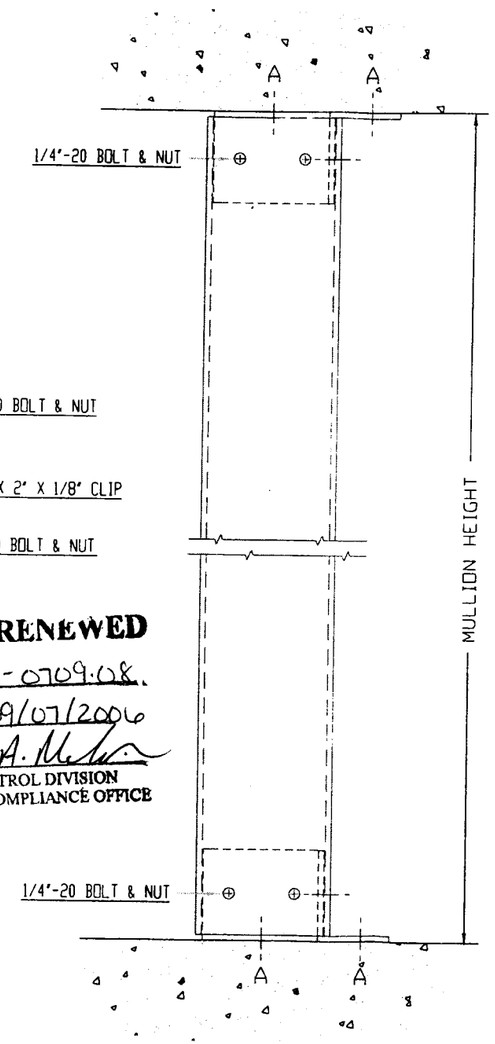

ELEVATION

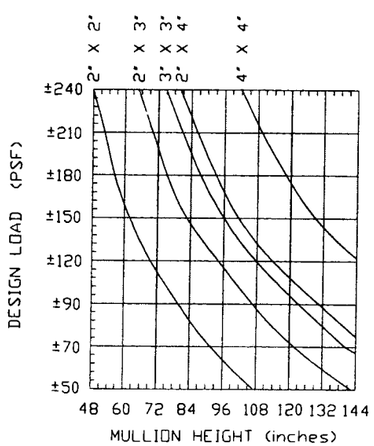

APPROVED FASTENERS

FASTENER "A"

MANUF.	TYPE	DIA.	IMBED.	MAT.
RAWL	TAPPER	.25	1.5	MASONRY
RAWL	CALK-IN	1/4"-20	.875	MASONRY
RAWL	LOK-BOLT	.25	1.125	MASONRY
BOLT & NUT	18-8 S.S. STEEL	1/4"-20	.75	ALUM.
	S.S.SCR	#14	2"	WOOD

EDGE DISTANCE FOR MASONRY AND CONCRETE (12X FASTENER DIA.) PLUS 1/2" FOR STUCCO

1

END SLAT FASTEN TO WALL

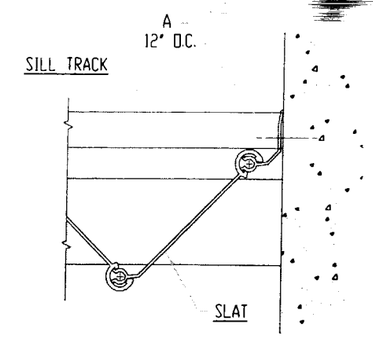

FASTENER "A"

MANUF.	TYPE	DIA.	IMBED.
RAWL	TAPPER	.25	1.5
RAWL	LOK-BOLT	.25	1.125
	WOOD S.S.SCR	#14	2"

2

END SLAT FASTEN TO ANGLE

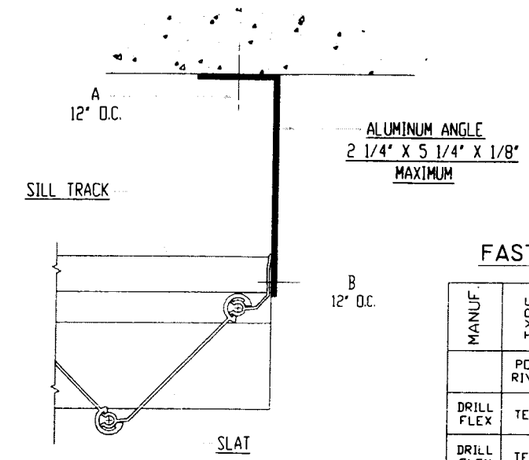

FASTENER "A"

MANUF.	TYPE	DIA.	IMBED.
RAWL	TAPPER	.25	1.5
RAWL	LOK-BOLT	.25	1.125
	WOOD S.S.SCR	#14	2"

FASTENER "B"

MANUF.	TYPE	DIA.	IMBED.
	POP-RIVIT	3/16"	.375
DRILL FLEX	TEKS	#12-14	.5
DRILL FLEX	TEKS	1/4"-14	.5
BOLT & NUT	18-8 S.S. STEEL	1/4"-20	.75

3

END SLAT FASTEN TO MULLION

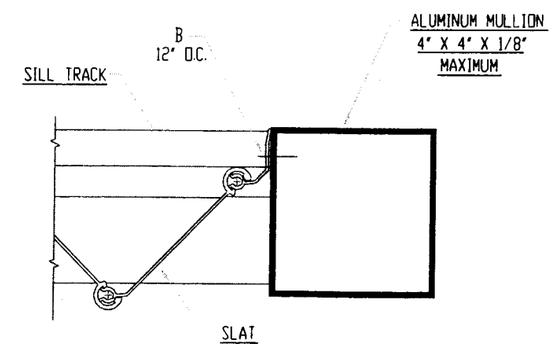

FASTENER "B"

MANUF.	TYPE	DIA.	IMBED.
	POP-RIVIT	3/16"	.375
DRILL FLEX	TEKS	#12-14	.5
DRILL FLEX	TEKS	1/4"-14	.5

American Consulting Engineers Council Member
Supporting Excellence in Engineering

JENKINS & CHARLAND
3559 N.W. 33rd Street
FORT LAUDERDALE, FL 33309
(305) 484-7777

TO THE BEST OF MY KNOWLEDGE AND ABILITY, THE COMPLETED STRUCTURE DEPICTED ON THESE PLANS COMPLIES WITH THE APPLICABLE MINIMUM BUILDING CODES

PROF. ENGINEER
GENE S. SANDERS
FLA. PE # 26590

SEP 5 2001

PRODUCT REVISED
as complying with the Florida Buiding Code
Acceptance No. 02-0426.05
Expiration Date 09/07/06
By
Miami Dade Product Control Division

BERNARDO SHUTTER CORPORATION
POMPANO BEACH, FLORIDA 33060

SCALE:	DRAWING NUMBER	DRAWN BY: VICKERY
DATE: 4-14-95	95-100	REVISED: 6-5-95
		REVISED: 6-17-96
		REVISED: 11-18-96
		PAGE NUMBER 10 OF 11

REVISED: 8-14-01

CORNER POST OPTIONS & FASTENING SCHEDULE

LOCK ASSEMBLY OPTIONS

LOCK ASSEMBLY

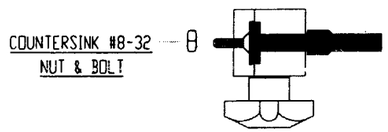

TOP VIEW

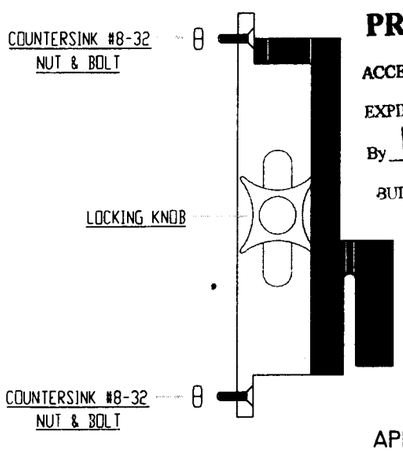

ELEVATION

PRODUCT RENEWED
ACCEPTANCE No. 01-0709.08
EXPIRATION DATE 09/07/2006
By [signature]
PRODUCT CONTROL DIVISION
BUILDING CODE COMPLIANCE OFFICE

LOCK REQUIREMENTS

SLAT HEIGHT	# OF LOCKS REQ'D
0 - 72"	1
73" - 97"	2
98" - 113"	2
114" - 129	3
130" - 144"	3

APPROVED FASTENERS

FASTENER "A"

MANUF.	TYPE	DIA.	IMBED.
RAWL	TAPPER	.25	1.5
RAWL	LOK-BOLT	.25	1.125
	WOOD S.S.SCR	#14	2"

FASTENER "B"

MANUF.	TYPE	DIA.	IMBED.
	POP-RIVIT	3/16"	.375
DRILL FLEX	TEKS	#12-14	.5
DRILL FLEX	TEKS	1/4"-14	.5

1

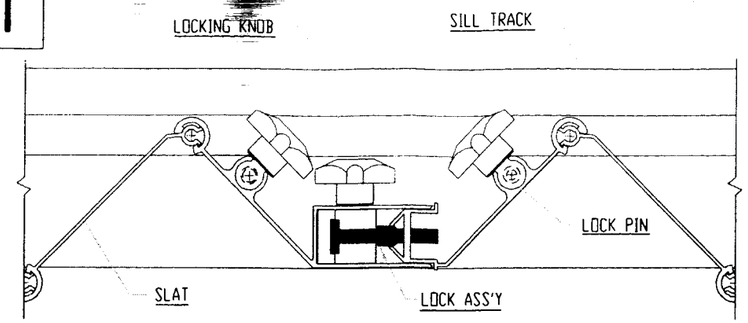

PLAN VIEW
INSIDE CONDITION

2

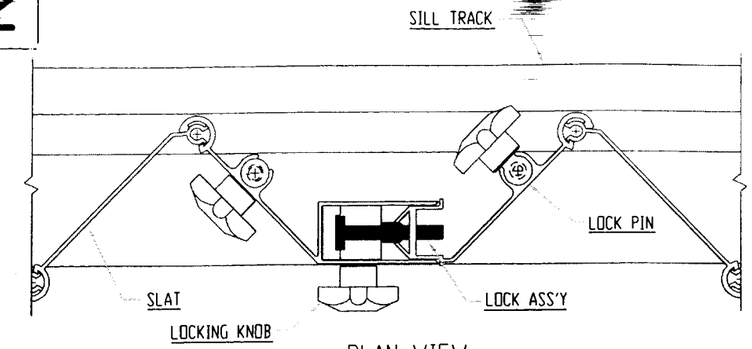

PLAN VIEW
OUTSIDE CONDITION

3

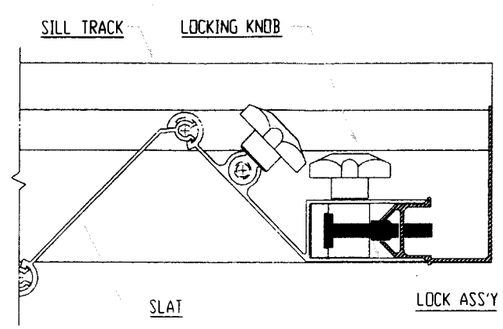

PLAN VIEW
MALE SIDE LOCK INSIDE CONDITION

4

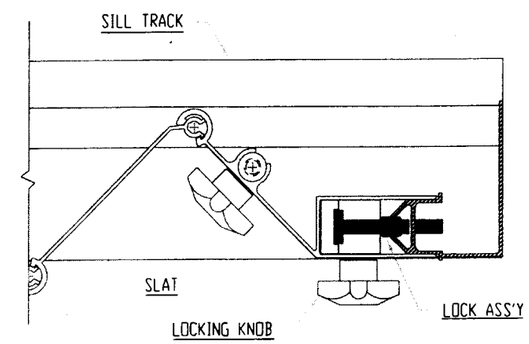

PLAN VIEW
MALE SIDE LOCK OUTSIDE CONDITION

A

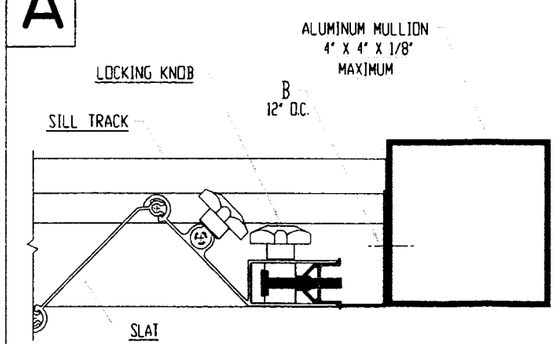

PLAN VIEW
MALE SIDE TO ALUM. MULLION

B

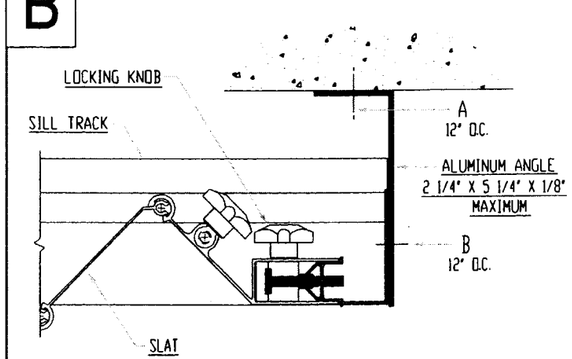

PLAN VIEW
MALE SIDE TO ALUM. ANGLE

C

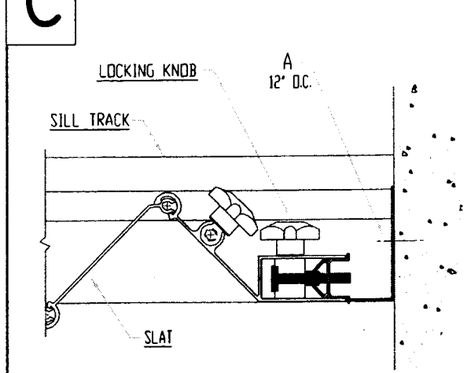

PLAN VIEW
MALE SIDE TO WALL

American Consulting Engineers Council Member
Supporting Excellence in Engineering

JENKINS & CHARLAND INCORPORATED
3559 N.W. 53rd Street
FORT LAUDERDALE, FL 33309
(305) 484-7777

TO THE BEST OF MY KNOWLEDGE AND ABILITY, THE COMPLETED STRUCTURE DEPICTED ON THESE PLANS COMPLIES WITH THE APPLICABLE MINIMUM BUILDING CODES.

PROF. ENGINEER
GENE S. SANDERS
FLA. PE # 26590
SEP 5 2001

PRODUCT REVISED
as complying with the Florida Building Code
Acceptance No 02-0426.05
Expiration Date 09/07/06
By [signature]
Miami Dade Product Control Division

BERNARDO SHUTTER CORPORATION
POMPANO BEACH, FLORIDA 33060

SCALE:	DRAWING NUMBER	DRAWN BY: VICKERY
DATE: 4-14-95	95-100	REVISED: 6-5-95
		REVISED: 6-17-96
		REVISED: 11-18-96
		PAGE NUMBER 11 OF 11

REVISED: 8-14-01

LOCK ASSEMBLY