MIAMI-DADE

BUILDING CODE COMPLIANCE OFFICE (BCCO)
PRODUCT CONTROL DIVISION

MIAMI-DADE COUNTY, FLORIDA
METRO-DADE FLAGLER BUILDING
140 WEST FLAGLER STREET, SUITE1603
MIAMI, FLORIDA 33130-1563
(305) 375-2901 FAX (305) 375-2908

NOTICE OF ACCEPTANCE (NOA)

Glasswall and Doors, Inc.
3945 NW 32 Avenue
Miami, FL 33142

SCOPE:

This NOA is being issued under the applicable rules and regulations governing the use of construction materials. The documentation submitted has been reviewed by Miami-Dade County Product Control Division and accepted by the Board of Rules and Appeals (BORA) to be used in Miami Dade County and other areas where allowed by the Authority Having Jurisdiction (AHJ).

This NOA shall not be valid after the expiration date stated below. The Miami-Dade County Product Control Division (In Miami Dade County) and/or the AHJ (in areas other than Miami Dade County) reserve the right to have this product or material tested for quality assurance purposes. If this product or material fails to perform in the accepted manner, the manufacturer will incur the expense of such testing and the AHJ may immediately revoke, modify, or suspend the use of such product or material within their jurisdiction. BORA reserves the right to revoke this acceptance, if it is determined by Miami-Dade County Product Control Division that this product or material fails to meet the requirements of the applicable building code.

This product is approved as described herein, and has been designed to comply with the High Velocity Hurricane Zone of the Florida Building Code.

DESCRIPTION: Series 100 Aluminum Sliding Glass Door – Small Missile Impact

APPROVAL DOCUMENT: Drawing No. **02-0158**, dated 02/11/02, with revision #2 dated 7/23/02, titled "Series: 100 Aluminum Sliding Glass Door Small Missile", sheets 1 through 7, prepared by Kelvyn A. Whitfield, Mechanical Engineer, signed and sealed by Kelvyn A. Whitfield, P.E., bearing the Miami-Dade County Product Control Approval stamp with the Notice of Acceptance number and approval date by the Miami-Dade County Product Control Division.

MISSILE IMPACT RATING: Small Missile Impact Resistant

LABELING: Each unit shall bear a permanent label with the manufacturer's name or logo, city, state and following statement: "Miami-Dade County Product Control Approved", unless otherwise noted herein.

RENEWAL of this NOA shall be considered after a renewal application has been filed and there has been no change in the applicable building code negatively affecting the performance of this product.

TERMINATION of this NOA will occur after the expiration date or if there has been a revision or change in the materials, use, and/or manufacture of the product or process. Misuse of this NOA as an endorsement of any product, for sales, advertising or any other purposes shall automatically terminate this NOA. Failure to comply with any section of this NOA shall be cause for termination and removal of NOA.

ADVERTISEMENT: The NOA number preceded by the words Miami-Dade County, Florida, and followed by the expiration date may be displayed in advertising literature. If any portion of the NOA is displayed, then it shall be done in its entirety.

INSPECTION: A copy of this entire NOA shall be provided to the user by the manufacturer or its distributors and shall be available for inspection at the job site at the request of the Building Official.

This NOA **revises NOA # 01-0402.03** and consists of this page 1 as well as approval document mentioned above.
The submitted documentation was reviewed by **Manuel Perez, P.E.**

PRODUCT CONTROL ACCEPTED

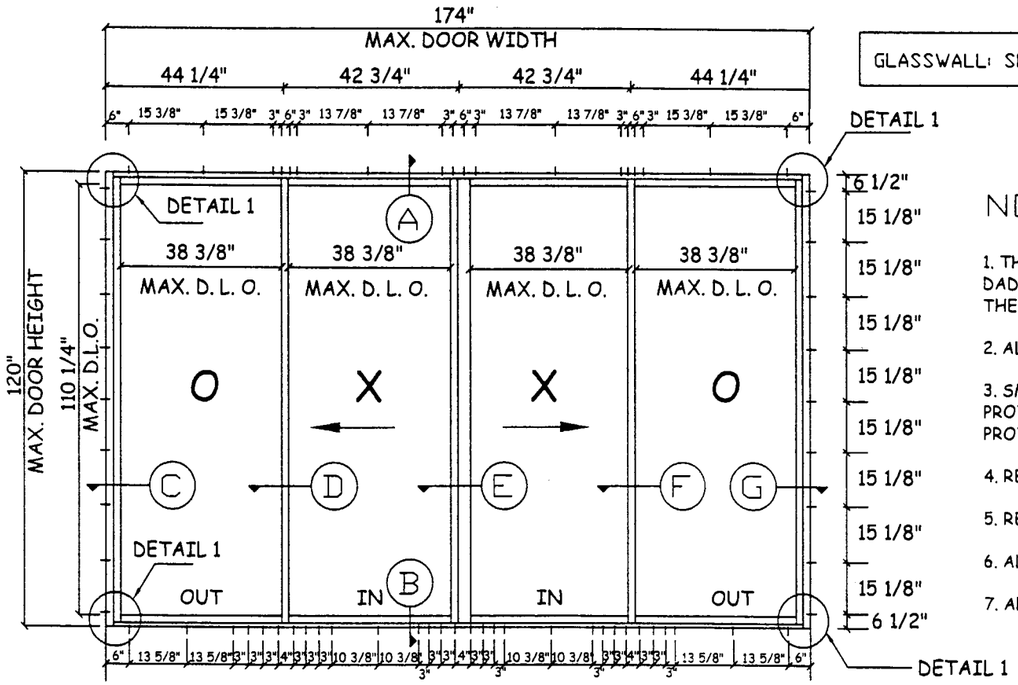

GLASSWALL: SERIES 100 SLIDING GLASS DOOR. BASED ON CONSTRUCTION TESTING CORPORATION No. 01-001.

NOTES

1. THIS SLIDING GLASS DOOR SYSTEM IS DESIGNED AND TESTED TO COMPLY WITH THE REQUIREMENTS OF THE 1994 DADE COUNTY EDITION OF THE SOUTH FLORIDA BUILDING CODE (S.F.B.C.) CHAPTER4. CHAPTER 23, CHAPTER 35, UNDER THE SPECIFIC CONDITION SHOWN ON THIS DRAWING.
2. ALL EXTRUSIONS ARE ALUMINUM, 6005-T5 ALLOY, WITH A MINIMUM Fy OF 35.000 P.S.I. U.O.N.
3. SMALL MISSILE IMPACT (TYPE 1 GLAZING): INSTALLATION UP TO 30FT ABOVE GRADE WILL REQUIRE A HURRICANE PROTECTION SYSTEM, BUT FOR INSTALLATION ABOVE 30FT ABOVE GRADE WILL NOT REQUIRE A HURRICANE PROTECTION SYSTEM.
4. REVISIONS BASED ON REPORT LABORATORY No. 3347. FENESTRATION TESTING LAB, INC.
5. REVISION OF SLIDING GLASS DOOR N.O.A. 01-0402.03.
6. ALL ANCHORS ARE 1/4" HILTI KWIK-CON II WITH 1 3/4" MIN. EMBEDMENT INTO CONCRETE BLOCK OR BETTER.
7. ALL ANCHOR SPACINGS ARE MAXIMUM DIMENSION AND TYPICAL FOR ALL CONFIGURATIONS.

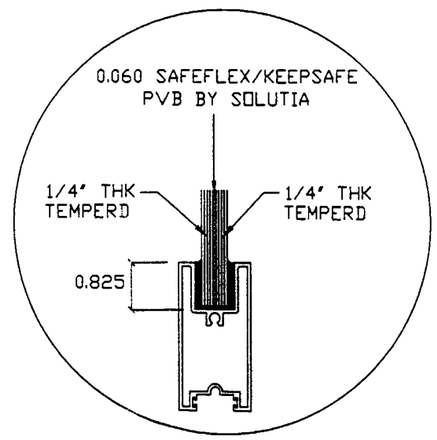

SMALL MISSILE GLAZING DETAIL
.590 LAMINATED GLASS

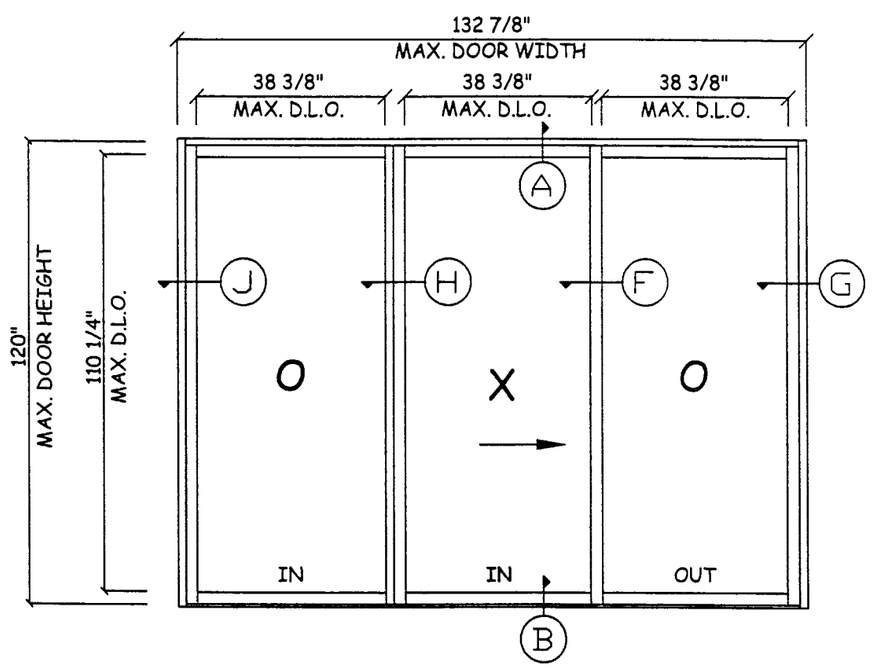

SMALL MISSILE

Design Load Capacity (P. S. F.)		
Positive	Negative	
110	110	With Item 28
100	100	Without Item 28

KELVYN A. WHITFIELD
MECHANICAL ENGINEER
1002 N.E 116 ST- MIAMI FL. 33161
TEL. (305) 659 1230
FAX. (305) 895 9976

GLASSWALL
3550 N.W. 49 St
MIAMI, FL. 33142
PHONE: (305) 638-5151

SERIES: 100 ALUMINUM SLIDING GLASS DOOR SMALL MISSILE

JOB NO.: 02-0158
DWG. NO.: 02-0158

REVISIONS DESCRIPTION

NO.	DATE	
1	5/25/02	AS PER DADE COUNTY
		REQUIREMENTS
2	7/23/02	AS PER DADE COUNTY
		REQUIREMENTS

DATE: 02/11/02
SCALE:
DWG. BY: D.M
SHEET 1 OF 7

KELVYN A. WHITFIELD
MECH. ENGINEER.
FLA. PE # 24140

7/23/02

Approved as complying with the Florida Buiding Code
Date AUG. 8, 2002
NOA# 02-0429.05
Miami Dade Product Control Division
By

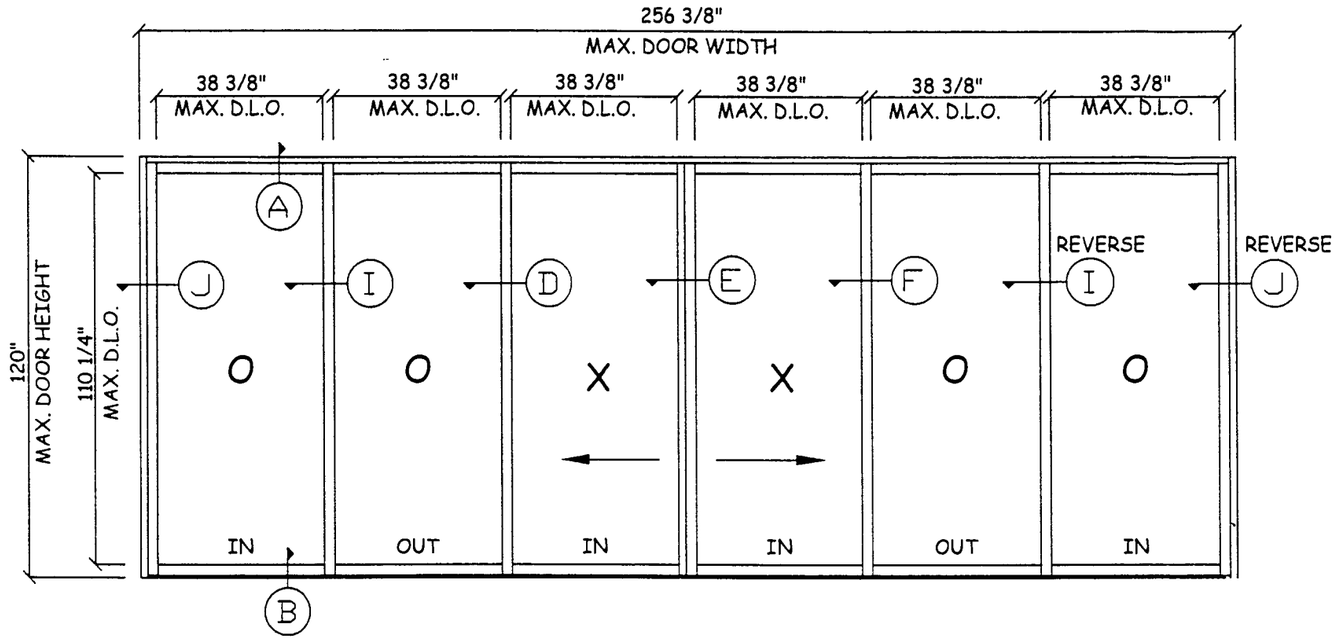

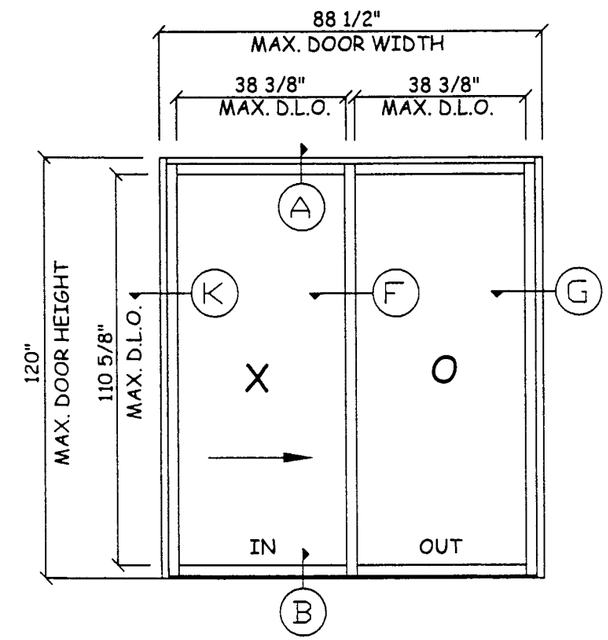

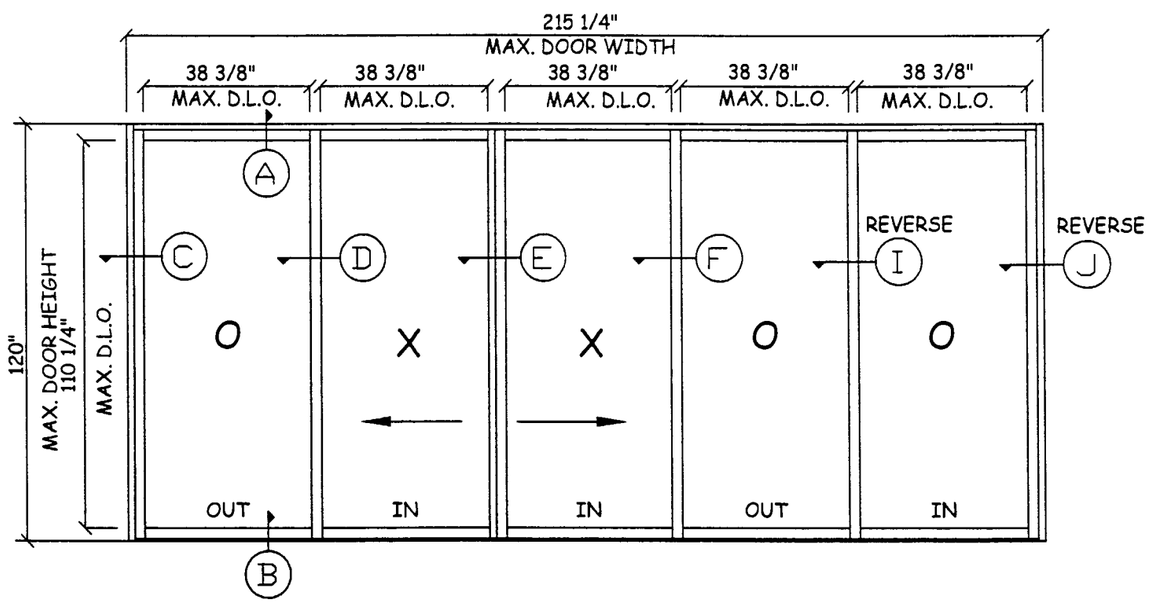

SMALL MISSILE

KELVYN A. WHITFIELD

MECHANICAL ENGINEER

1002 N.E 116 ST- MIAMI FL. 33161

TEL. (305) 659 1230

FAX. (305) 895 9976

GLASSWALL

3550 N.W. 49 St

MIAMI, FL. 33142

PHONE: (305) 638-5151

SERIES: 100 ALUMINUM
SLIDING GLASS DOOR
SMALL MISSILE

JOB NO.: 02-0158

DWG. NO.: 02-0158

REVISIONS DESCRIPTION

NO.	DATE	
1	5/25/02	AS PER DADE COUNTY
		REQUIREMENTS
2	7/23/02	AS PER DADE COUNTY
		REQUIREMENTS

DATE: 02/11/02

SCALE:

DWG. BY: D.M

SHEET 2 OF 7

KELVYN A. WHITFIELD
MECH. ENGINEER.
FLA. PE # 24140

7/23/02

Approved as complying with the
Florida Buiding Code
Date AUG. 8, 2002
NOA# 02-0429.05
Miami Dade Product Control
Division
By

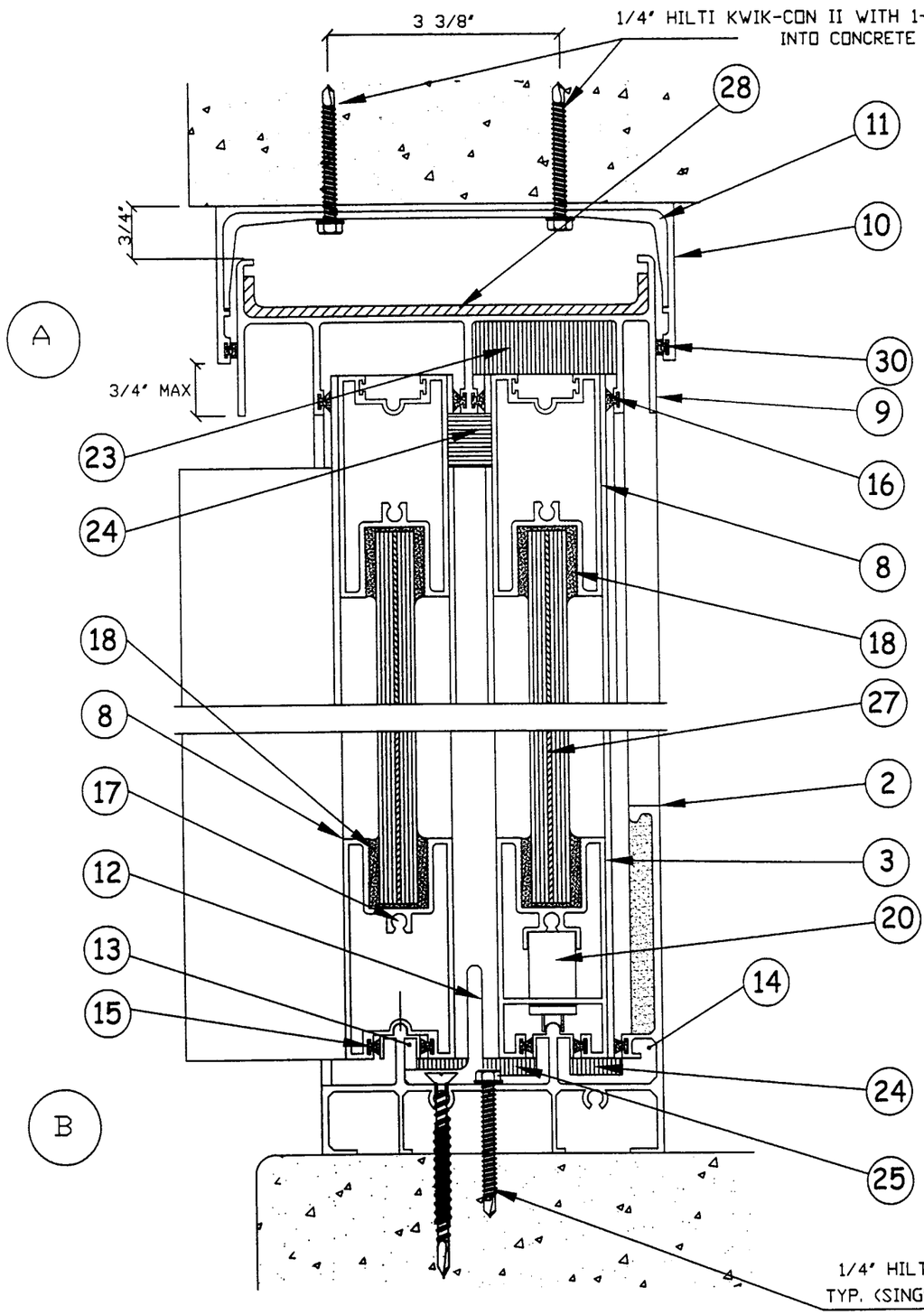

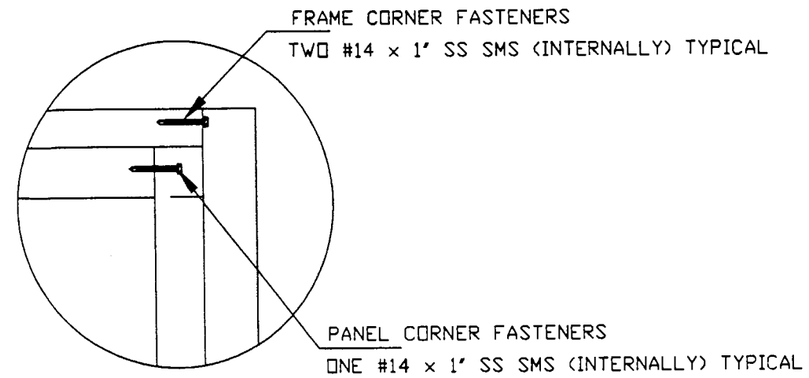

DETAIL 1

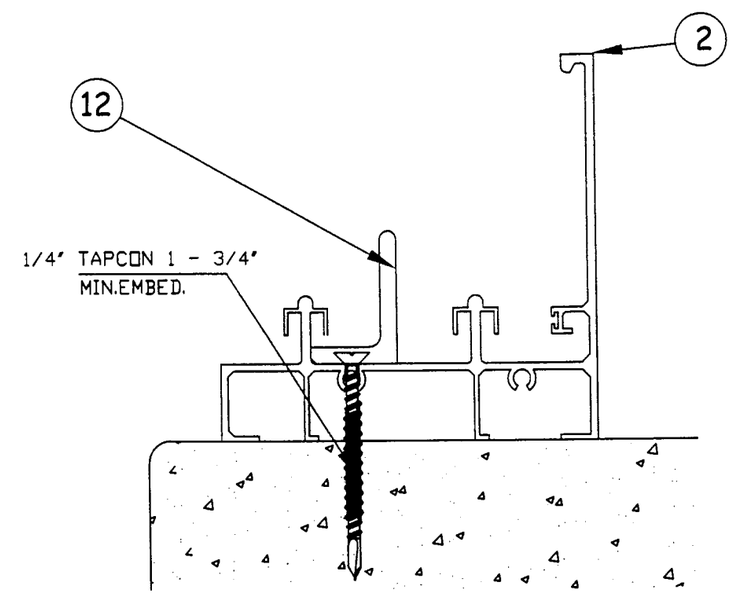

SMALL MISSILE

KELVYN A. WHITFIELD

MECHANICAL ENGINEER
1002 N.E 116 ST- MIAMI FL. 33161
TEL. (305) 659 1230
FAX. (305) 895 9976

GLASSWALL

3550 N.W. 49 St
MIAMI, FL. 33142
PHONE: (305) 638-5151

SERIES: 100 ALUMINUM
SLIDING GLASS DOOR
SMALL MISSILE

JOB NO.: 02-0158
DWG. NO.: 02-0158

REVISIONS DESCRIPTION

NO.	DATE	
1	5/20/02	AS PER DADE COUNTY
		REQUIREMENTS
2	7/23/02	AS PER DADE COUNTY
		REQUIREMENTS

DATE: 02/11/02

SCALE: N.T.S.

DWG. BY: D.M

SHEET 3 OF 7

KELVYN A. WHITFIELD
MECH. ENGINEER.
FLA. PE # 24140

7/23/02

Approved as complying with the
Florida Buiding Code
Date AUG. 8, 2002
NOA# 02-0429.05
Miami Dade Product Control
Division
By

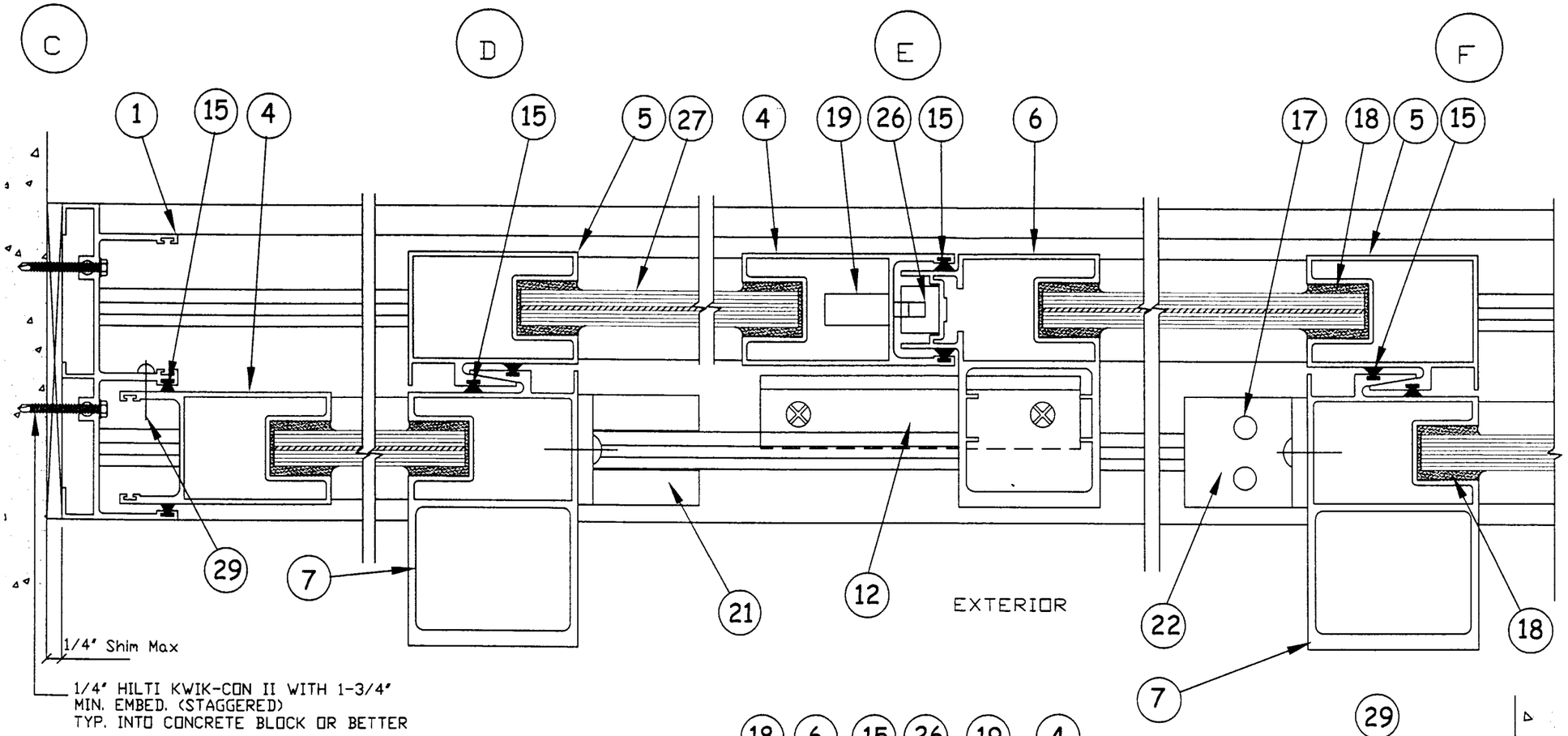

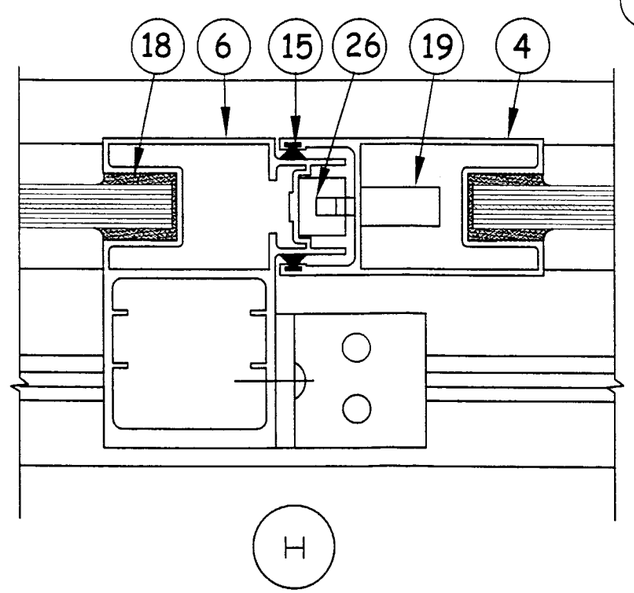

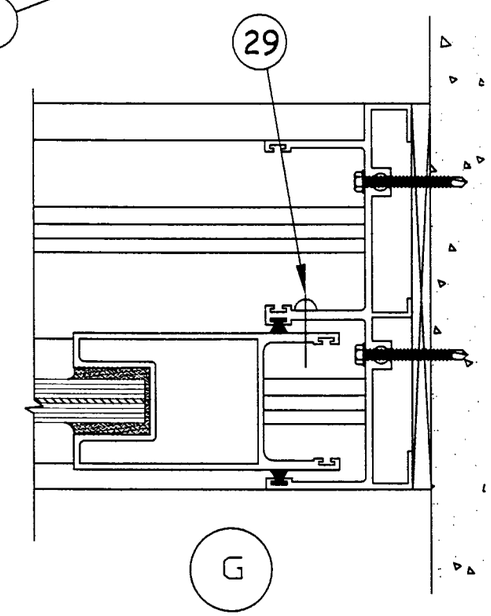

SMALL MISSILE

KELVYN A. WHITFIELD

MECHANICAL ENGINEER
1002 N.E 116 ST- MIAMI FL. 33161
TEL. (305) 659 1230
FAX. (305) 895 9976

GLASSWALL

3550 N.W. 49 St
MIAMI, FL. 33142
PHONE: (305) 638-5151

SERIES: 100 ALUMINUM
SLIDING GLASS DOOR
SMALL MISSILE

JOB NO.: 02-0158

DWG. NO.: 02-0158

REVISIONS DESCRIPTION

NO.	DATE	
1	5/20/02	AS PER DADE COUNTY
		REQUIREMENTS
2	7/23/02	AS PER DADE COUNTY
		REQUIREMENTS

DATE: 02/11/02

SCALE: N.T.S.

DWG. BY: D.M

SHEET 4 OF 7

KELVYN A. WHITFIELD
MECH. ENGINEER.
FLA. PE # 24140

7/23/02

Approved as complying with the Florida Buiding Code
Date AUG. 8, 2002
NOA# 02-0429.05
Miami Dade Product Control Division
By Manuel Perez

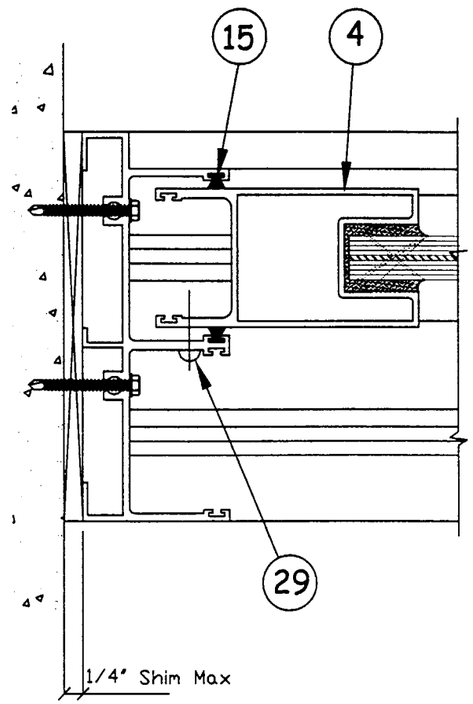

J

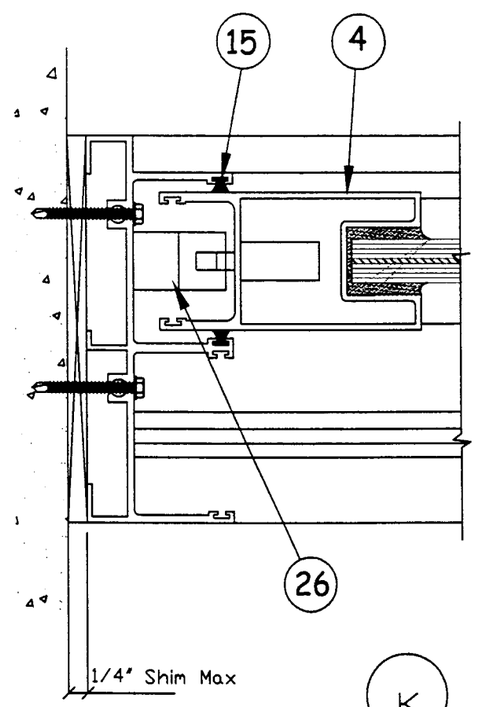

K

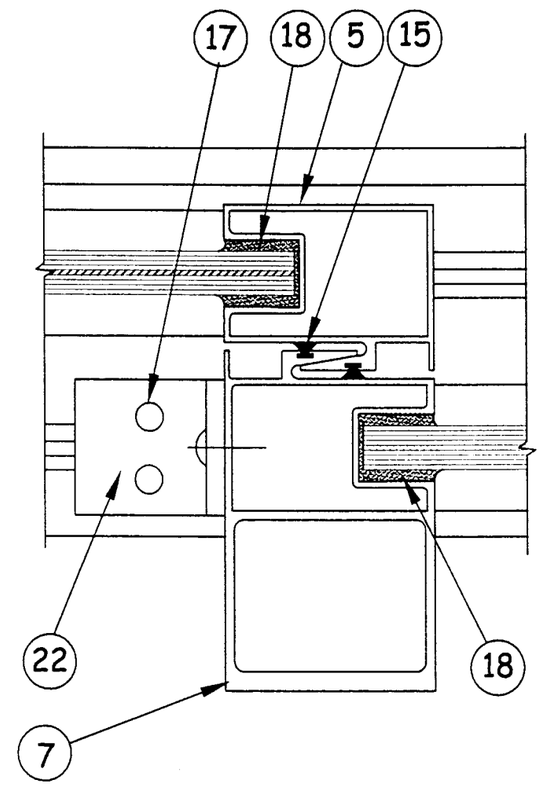

I

FIXED

SMALL MISSILE

KELVYN A. WHITFIELD

MECHANICAL ENGINEER
1002 N.E 116 ST- MIAMI FL. 33161
TEL. (305) 659 1230
FAX. (305) 895 9976

GLASSWALL

3550 N.W. 49 St
MIAMI, FL. 33142
PHONE: (305) 638-5151

SERIES: 100 ALUMINUM
SLIDING GLASS DOOR
SMALL MISSILE

JOB NO.: 02-0158

DWG. NO.: 02-0158

REVISIONS DESCRIPTION

NO.	DATE	
1	5/20/02	AS PER DADE COUNTY
		REQUIREMENTS
2	7/23/02	AS PER DADE COUNTY
		REQUIREMENTS

DATE: 02/11/02

SCALE: N.T.S.

DWG. BY: D.M

SHEET 5 OF 7

KELVYN A. WHITFIELD
MECH. ENGINEER.
FLA. PE # 24140

7/23/02

Approved as complying with the
Florida Buiding Code
Date AUG. 8, 2002
NOA# 02-0429.05
Miami Dade Product Control
Division
By

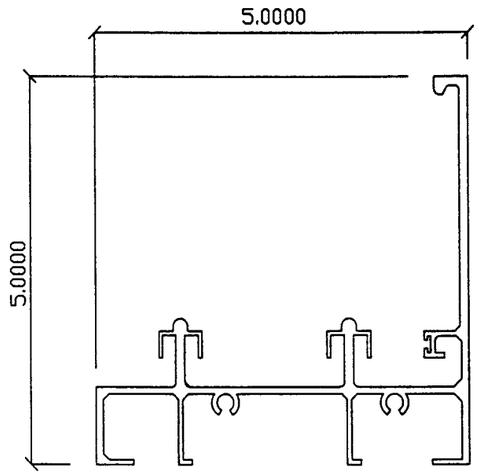

(2) Sill # 100-002
Material: Aluminum
HALF SCALE

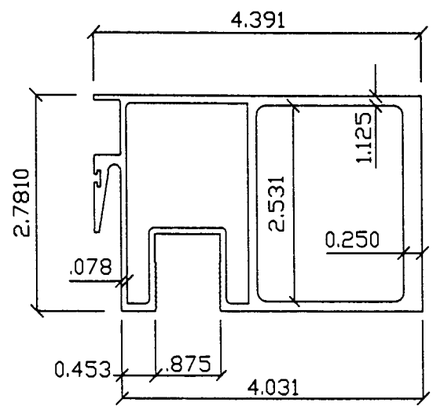

(7) Heavy Interlock # 100-007
HALF SCALE

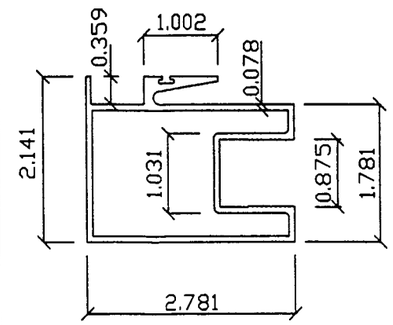

(5) Interlock # 100-005
HALF SCALE

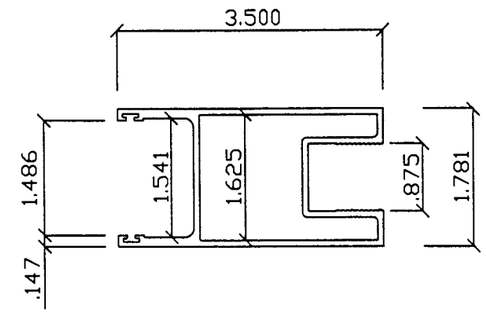

(4) Fixed & Lock Stile # 100-004
HALF SCALE

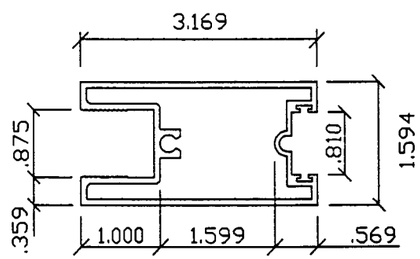

(8) Fixed Bottom # 100-008
HALF SCALE

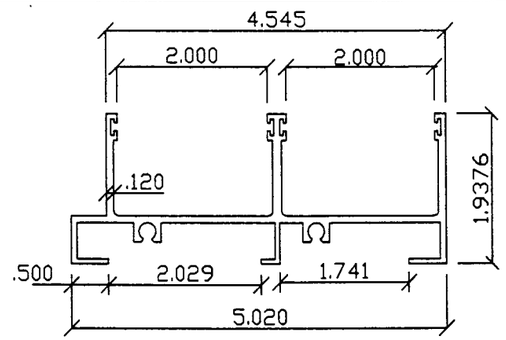

(1) Jamb # 100-001
HALF SCALE

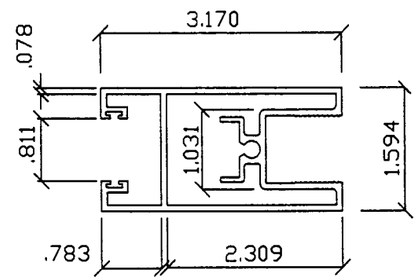

(3) Bottom Moving Panel # 100-003
HALF SCALE

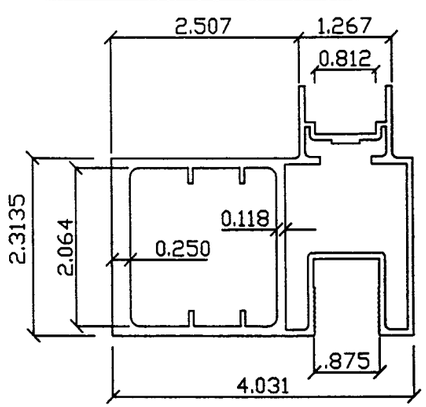

(6) Astragal # 100-006
HALF SCALE

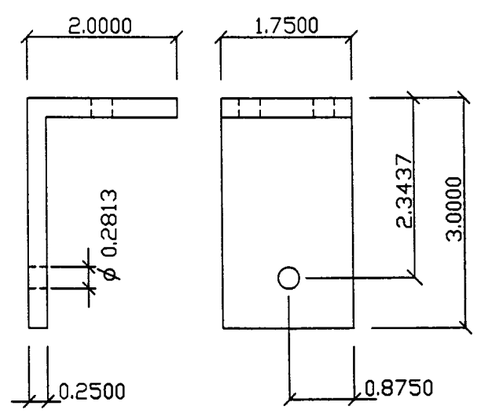

(22) AB-2 Aluminum Angle Top 6063-T6 HALF SCALE

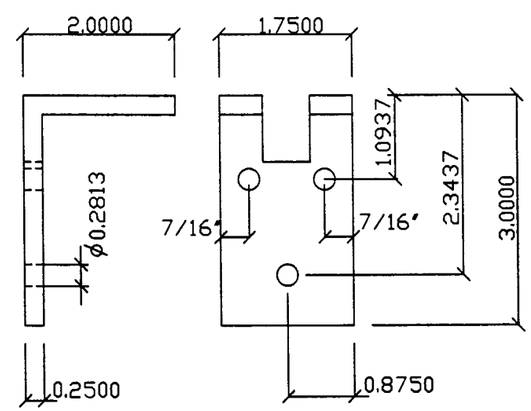

(21) AB-1 Aluminum Angle Bottom 6063-T6 HALF SCALE

KELVYN A. WHITFIELD
MECHANICAL ENGINEER
1002 N.E 116 ST- MIAMI FL. 33161
TEL. (305) 659 1230
FAX. (305) 895 9976

GLASSWALL
3550 N.W. 49 St
MIAMI, FL. 33142
PHONE: (305) 638-5151

SERIES: 100 ALUMINUM
SLIDING GLASS DOOR
SMALL MISSILE

JOB NO.: 02-0158
DWG. NO.: 02-0158

REVISIONS DESCRIPTION

NO.	DATE	
1	5/20/02	AS PER DADE COUNTY
		REQUIREMENTS
2	7/23/02	AS PER DADE COUNTY
		REQUIREMENTS

DATE: 02/11/02
SCALE: N.T.S.
DWG. BY: D.M
SHEET 6 OF 7

KELVYN A. WHITFIELD
MECH. ENGINEER.
FLA. PE # 24140

7/23/02

Approved as complying with the
Florida Building Code
Date AUG. 8, 2002
NOA# 02-0429.05
Miami Dade Product Control
Division
By Manuel Perez

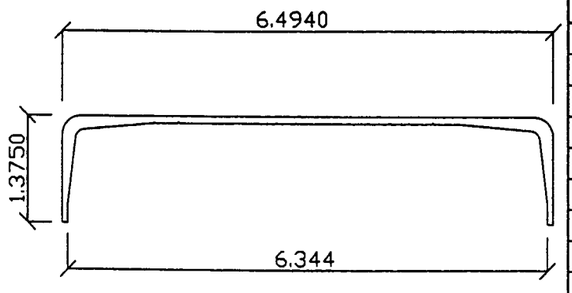

(11) Head Receptor Reinforcement # 100-010
HALF SCALE

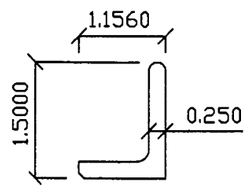

(12) Hurricane Clip # 100-012
HALF SCALE

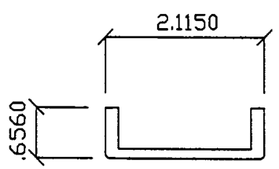

(13) Sill Chanel Clip # 100-013
HALF SCALE

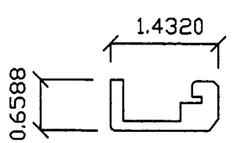

(14) Sill Chanel Clip II # 100-014
HALF SCALE

Item Number	Part Number	Part Name	Req/d Qty	Remarks
1	100-001	Jamb	2	Frame
2	100-002	Sill	1	Frame
3	100-003	Bottom moving panel	2	Panel
4	100-004	Fixed & Lock Stile	3	Panel
5	100-005	Interlock	2	Panel
6	100-006	Astragal	1	Panel
7	100-007	Heavy Interlock	2	Panel
8	100-008	Fix & Mov Top & Bot	6	Panel
9	100-009	Head	1	Frame
10	100-011	Head Receptor	1	Frame
11	100-010	H/R Reinforcement		Frame
12	100-012	Hurricane Clip	1	Only at OXXO (5 1/4" Long), OXXOO, OOXXOO attached to frame sill using two 1/4 Kwik-con.
13	100-013	Sill Chanel clip I	2	Frame
14	100-014	Sill Chanel clip II	3	Frame
15	568-61279	Fin Seal .270HT		Part #568-61279 - 00914-18701 Prototype Plastics
16	568-62379	Fin Seal .370HT		Part #568-62379 - 00914-18701 Prototype Plastics
17		Screw	6	# 14 x 1" SMS Stainless Steel frame & panel assembly
18	7P-687	Chanel glazed		Chanel glazed using a flexible vinyl glazing gasket
19	D-60C	Lock	1	Door & Window Hardware 3 Point Mortise Hook Lock
20	AR-50A	Wheel, SS	4/Panel	D & W Hardware (Attached with 2 #10 x 1/2" PH-PH-SMS-S/S
21	AB-1	Aluminum Angle Bot	2	Door & Window Hardware
22	AB-2	Aluminum Angle Top	2	Door & Window Hardware
23	P1000AFK(PC)2	Pad		Ultrafab
24	P6309AFK(PC).75	Pad		Ultrafab
25	P5009AFK(PC)1.75	Pad		Ultrafab
26	KP-60	Keeper	1	Door & Window Hardware
27		Glazing		9/16" Overall Lamin. glass 1/4 Temp./0.060" Interl. Saflex/Keepsafe by Solutia/1/4" Temp.
28	Break Metal	Reinforcing Chanel	3	At top of Interlocks, 3003 x 0.075" THK x 18" Lg (110 P.S.F Only) Bend Rad. 0.15".
29		Tie down	1	#10 x 3/4" LG. PH-PH SMS S-S (Only at bottom fixed panel)
30	7P-448	Receptor Gasket		Prototype plastic Ext. co. inc

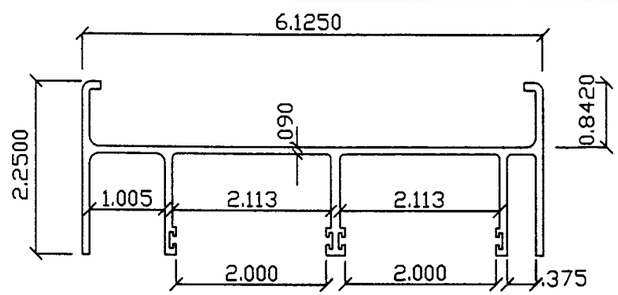

(9) Head # 100-009
HALF SCALE

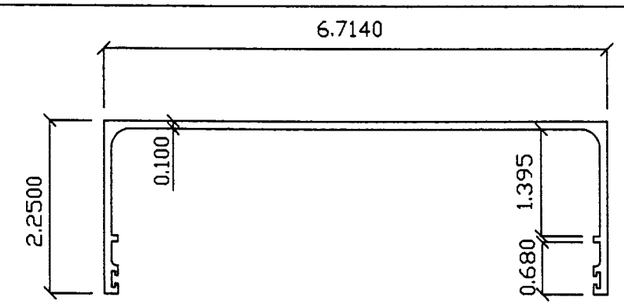

(10) Head Receptor # 100-011
HALF SCALE

KELVYN A. WHITFIELD
MECHANICAL ENGINEER
1002 N.E 116 ST- MIAMI FL. 33161
TEL. (305) 659 1230
FAX. (305) 895 9976

GLASSWALL
3945 N.W. 32 AVE
MIAMI, FL. 33142
PHONE: (305) 638-5151

SERIES: 100 ALUMINUM
SLIDING GLASS DOOR
SMALL MISSILE

JOB NO.: 02-0158
DWG. NO.: 02-0158

REVISIONS DESCRIPTION

NO.	DATE	
1	5/25/02	AS PER DADE COUNTY
		REQUIREMENTS
2	7/23/02	AS PER DADE COUNTY
		REQUIREMENTS

DATE: 02/11/02
SCALE:
DWG. BY: D.M
SHEET 7 OF 7

KELVYN A. WHITFIELD
MECH. ENGINEER.
FLA. PE # 24140

7/23/02

Approved as complying with the
Florida Buiding Code
Date AUG. 8 2002
NOA# 02-0424.05
Miami Dade Product Control
Division
By