MIAMI-DADE

BUILDING CODE COMPLIANCE OFFICE (BCCO)
PRODUCT CONTROL DIVISION

MIAMI-DADE COUNTY, FLORIDA
METRO-DADE FLAGLER BUILDING
140 WEST FLAGLER STREET, SUITE 1603
MIAMI, FLORIDA 33130-1563
(305) 375-2901 FAX (305) 375-2908

NOTICE OF ACCEPTANCE (NOA)

All Broward Hurricane Panel, Inc.
450 W. McNab Rd.
Ft. Lauderdale, FL 33309

SCOPE:
This NOA is being issued under the applicable rules and regulations governing the use of construction materials. The documentation submitted has been reviewed by Miami-Dade County Product Control Division and accepted by the Board of Rules and Appeals (BORA) to be used in Miami Dade County and other areas where allowed by the Authority Having Jurisdiction (AHJ).

This NOA shall not be valid after the expiration date stated below. The Miami-Dade County Product Control Division (In Miami Dade County) and/or the AHJ (in areas other than Miami Dade County) reserve the right to have this product or material tested for quality assurance purposes. If this product or material fails to perform in the accepted manner, the manufacturer will incur the expense of such testing and the AHJ may immediately revoke, modify, or suspend the use of such product or material within their jurisdiction. BORA reserves the right to revoke this acceptance, if it is determined by Miami-Dade County Product Control Division that this product or material fails to meet the requirements of the applicable building code.

This product is approved as described herein, and has been designed to comply with the High Velocity Hurricane Zone of the Florida Building Code.

DESCRIPTION: HT-100 Premier Aluminum Accordion Shutter

APPROVAL DOCUMENT: Drawing No. 99-817, titled "Premier Accordion Shutter", sheets 1 through 6, prepared, signed and sealed by V.J. Knezevich, P.E., dated 5/10/02, bearing the Miami-Dade County Product Control Revision stamp with the Notice of Acceptance number and expiration date by the Miami-Dade County Product Control Division.

MISSILE IMPACT RATING: Large and Small Missile Impact

LABELING: Each unit shall bear a permanent label with the manufacturer's name or logo, city, state and following statement: "Miami-Dade County Product Control Approved", unless otherwise noted herein.

RENEWAL of this NOA shall be considered after a renewal application has been filed and there has been no change in the applicable building code negatively affecting the performance of this product.

TERMINATION of this NOA will occur after the expiration date or if there has been a revision or change in the materials, use, and/or manufacture of the product or process. Misuse of this NOA as an endorsement of any product, for sales, advertising or any other purposes shall automatically terminate this NOA. Failure to comply with any section of this NOA shall be cause for termination and removal of NOA.

ADVERTISEMENT: The NOA number preceded by the words Miami-Dade County, Florida, and followed by the expiration date may be displayed in advertising literature. If any portion of the NOA is displayed, then it shall be done in its entirety.

INSPECTION: A copy of this entire NOA shall be provided to the user by the manufacturer or its distributors and shall be available for inspection at the job site at the request of the Building Official.
This NOA **revises NOA # 99-1129.04** and, consists of this page 1 as well as approval document mentioned above.
The submitted documentation was reviewed by **Raul Rodriguez.**

PRODUCT CONTROL ACCEPTED

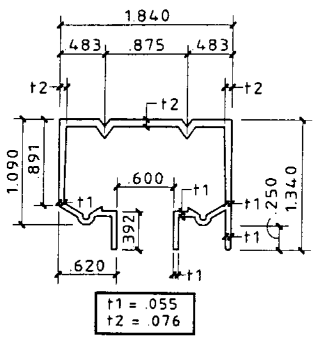

1 **HEADER-CLG. MOUNTED**
SCALE: HALF SIZE

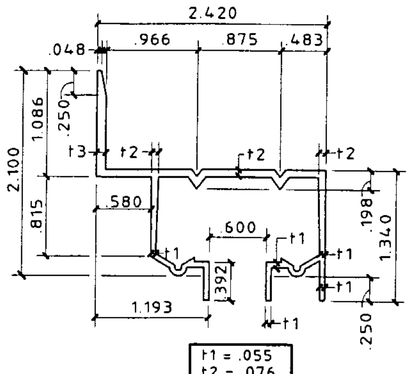

2 **HEADER-WALL MOUNTED**
SCALE: HALF SIZE

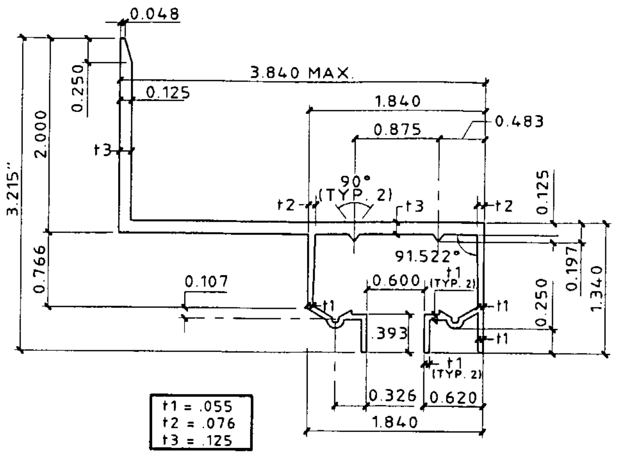

2a **BUILD-OUT WALL HEADER**
SCALE: HALF SIZE

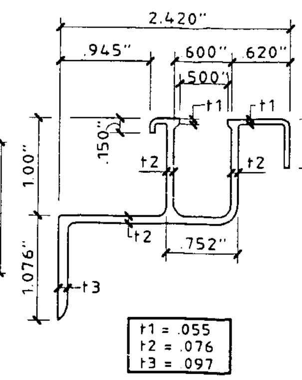

3 **SILL-WALL MOUNTED**
SCALE: HALF SIZE

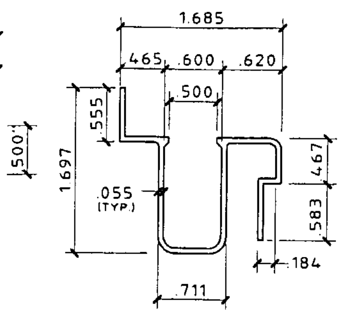

4 **ADJ. SILL-TOP**
SCALE: HALF SIZE

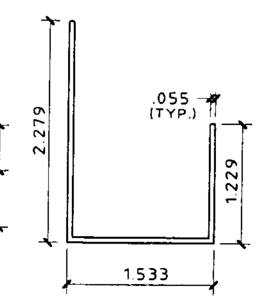

5 **ADJ. SILL-BOT.**
SCALE: HALF SIZE

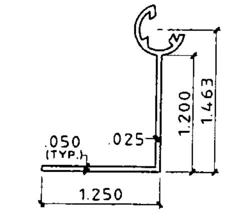

6a **90° END SLAT**
SCALE: HALF SIZE

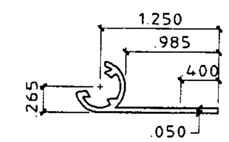

7 **FLAT END SLAT**
SCALE: HALF SIZE

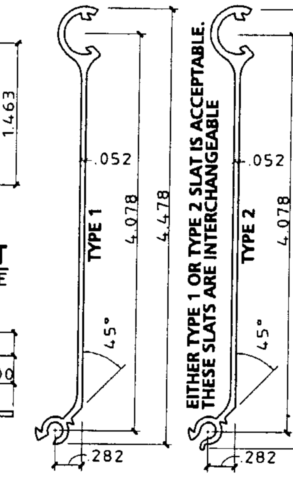

8 **TYP. SLATS**
SCALE: HALF SIZE

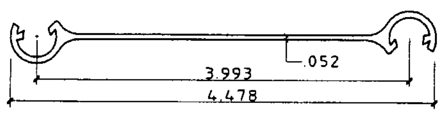

8a **ADAPTER SLAT**
SCALE: HALF SIZE

GENERAL NOTES:

1. THESE APPROVAL DOCUMENTS REPRESENT A SHUTTER SYSTEM ANALYZED WITH THE PROVISION SET FOR THE ISSUANCE OF A NOTICE OF ACCEPTANCE (NOA) BY MIAMI-DADE COUNTY PRODUCT CONTROL DIVISION FOR THE HIGH VELOCITY HURRICANE ZONE (HVHZ) OF THE FLORIDA BUILDING CODE.
2. TO VERIFY THAT THE ANCHORS AS TESTED, ARE NOT OVERSTRESSED IN THESE APPROVAL DOCUMENTS, A 33% INCREASE IN ALLOWABLE STRESS WAS USED IN THE FASTENER ANALYSIS.
3. DETERMINE THE POSITIVE AND NEGATIVE DESIGN LOADS TO USE WHEN REFERENCING THESE DOCUMENTS IN ACCORDANCE WITH THE GOVERNING CODE AND GOVERNING WIND VELOCITY. FOR WIND LOAD CALCULATIONS IN ACCORDANCE WITH ASCE 7-98, A DIRECTIONALITY FACTOR OF Kd =1.0 SHALL BE USED.
4. THESE APPROVAL DOCUMENTS ARE GENERIC AND DO NOT INCLUDE INFORMATION FOR SITE-SPECIFIC APPLICATION OF THIS SHUTTER SYSTEM.
5. THESE APPROVAL DOCUMENTS COMPLY WITH CHAPTER 61G15-23 OF THE FLORIDA ADMINISTRATIVE CODE.
6. THESE APPROVAL DOCUMENTS, ARE SUITABLE TO BE APPLIED BY THE CONTRACTOR PROVIDED THE CONTRACTOR DOES NOT DEVIATE FROM THE CONDITIONS DETAILED HEREIN AND THE CONTRACTOR VERIFIES THAT THE EXISTING STRUCTURE DOES NOT DEVIATE IN EITHER FORM OR MATERIAL FROM THE STRUCTURAL SUBSTRATES DETAILED HEREIN.
7. ANY MODIFICATIONS OR ADDITIONS TO THESE APPROVAL DOCUMENTS WILL VOID THE APPROVAL DOCUMENTS.
8. WHEN THE SITE CONDITIONS DEVIATE FROM THESE APPROVAL DOCUMENTS, THE BUILDING OFFICIAL MAY ELECT ONE OF THE FOLLOWING OPTIONS:
   A) REQUIRE THAT SITE SPECIFIC DOCUMENTS BE PREPARED, SIGNED, DATED AND SEALED BY A LICENSED ENGINEER OR REGISTERED ARCHITECT, WHICH DETAIL AND JUSTIFY THE DEVIATION. SAID DOCUMENTS SHALL BE SUBMITTED TO THE PRODUCT ENGINEER FOR REVIEW AS A CONDITION TO THE BUILDING OFFICIAL GRANTING HIS/HER APPROVAL.
   B) REQUIRE THAT A ONE-TIME SITE SPECIFIC APPROVAL BE APPLIED FOR AND SECURED FROM THE MIAMI-DADE COUNTY PRODUCT CONTROL DIVISION

   WHEN THE SITE CONDITION DEVIATIONS OCCUR WITHIN THE HIGH VELOCITY HURRICANE ZONE AREAS ONLY OPTION "B" SHALL BE ACCEPTED BY THE BUILDING OFFICIAL.
9. EACH SHUTTER ASSEMBLY SHALL BE PERMANENTLY LABELED AS FOLLOWS:
   BHPCO
   FORT LAUDERDALE, FLORIDA
   MIAMI-DADE COUNTY PRODUCT APPROVED
10. ALL SHUTTERS SHALL HAVE A LOCKING MECHANISM AT CENTER OR SIDE CLOSURE WITHIN 18" OF CENTER (VERT.). LOCKING MECHANISM SHALL BE LOCKED TO PROVIDE HURRICANE PROTECTION.
11. STORM SHUTTER EXTRUSIONS SHOWN SHALL BE 6063-T6 ALUMINUM ALLOY, U.O.N.
12. ALL SCREWS AND BOLTS TO BE 2024-T4 ALUMINUM ALLOY, STAINLESS STEEL, OR GALVANIZED STEEL WITH A MINIMUM TENSILE STRENGTH OF 33 K.S.I., U.O.N. POP RIVETS TO BE 3/16"Ø, 5052 ALUM. ALLOY, U.O.N.
13. TOP AND BOTTOM DETAILS MAY BE INTERCHANGED AS FIELD CONDITIONS REQUIRE.
14. FLOOR TRACKS MAY BE REMOVABLE AT NON-STACKING LOCATIONS. USE REMOVABLE ANCHORS SUCH AS POWERS CALK-IN ANCHORS.

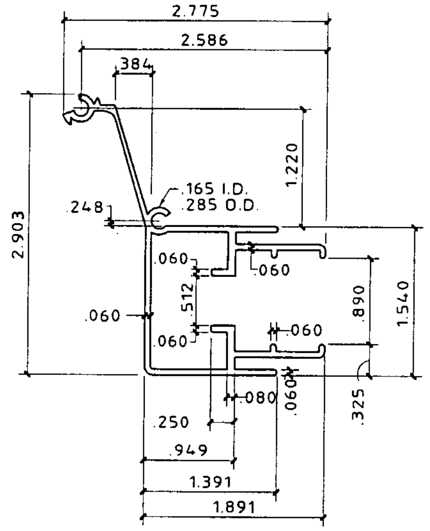

9 **CENTER MATE 1**
SCALE: HALF SIZE

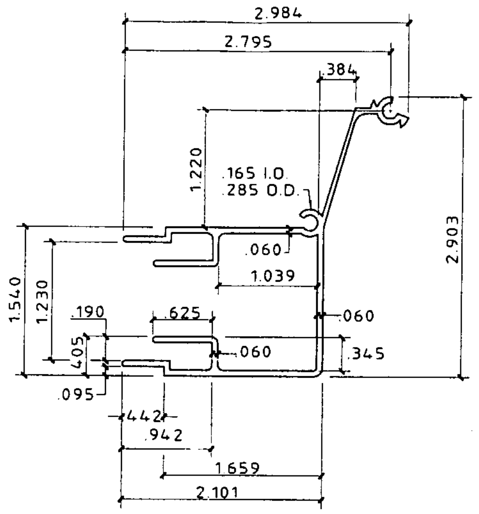

10 **CENTER MATE 2**
SCALE: HALF SIZE

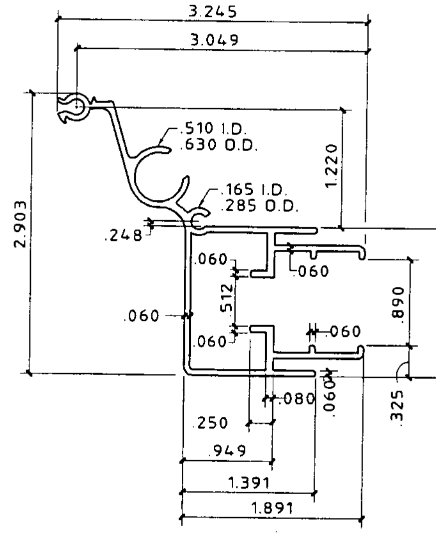

9a **CENTER MATE 1** (W/ LOCKING ROD)
SCALE: HALF SIZE

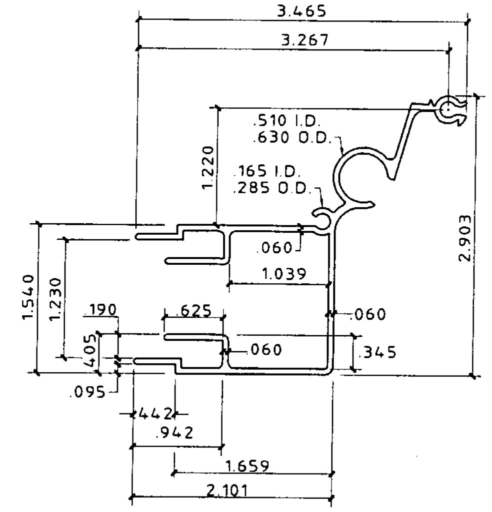

10a **CENTER MATE 2** (W/ LOCKING ROD)
SCALE: HALF SIZE

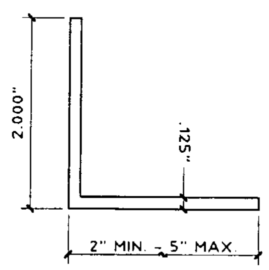

11 **ANGLE**
SCALE: HALF SIZE

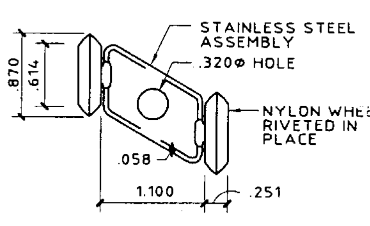

TYP. AT EVERY OTHER INSIDE JOINT AT TOP.

12 **ROLLER ASSEMBLY**
SCALE: HALF SIZE

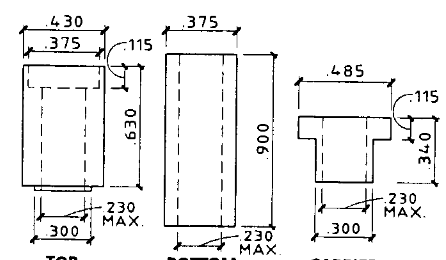

12a **BUSHINGS**
SCALE: FULL SIZE

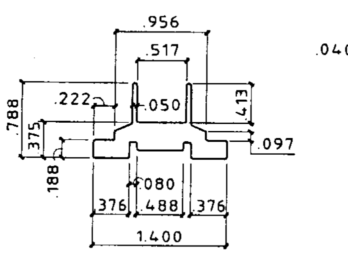

13 **INSERT**
SCALE: HALF SIZE

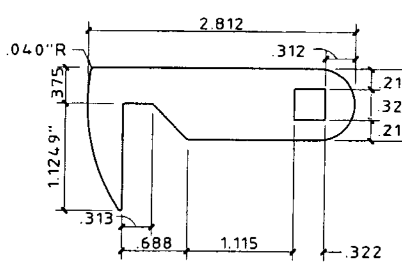

1/8" THICK STAINLESS STEEL

14 **LOCKING ARM**
SCALE: HALF SIZE

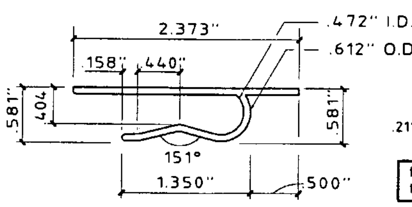

(OPTIONAL)

15 **LOCKING CLIP**
SCALE: HALF SIZE

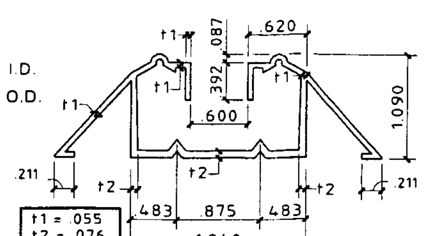

16 **WALKOVER SILL FLOOR MOUNTED**
SCALE: HALF SIZE

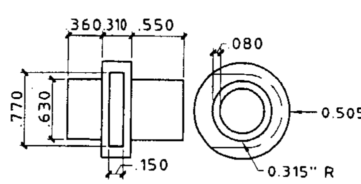

17 **LOCKING ARM ALIGNMENT BUSHING (NYLON)**
SCALE: HALF SIZE

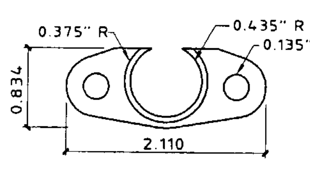

18 **INSIDE HANDLE SHIM (NYLON)**
SCALE: HALF SIZE

PRODUCT REVISED
as complying with the Florida Buiding Code
Acceptance No 02-0502.08
Expiration Date Jan 4 21, 2003
By
Miami Dade Product Control Division

KNEZEVICH & ASSOCIATES, INC.
CONSULTING ENGINEERS • PRODUCT TESTING
1260 N. UNIVERSITY DRIVE, SUITE 180 • FORT LAUDERDALE, FL 33322
TEL: (954) 382-2800 • FAX: (954) 382-2989 • FLORIDA COA #3205
WEBSITE: WWW.KNEZEVICH.COM • E-MAIL: KA@KNEZEVICH.COM

COPYRIGHT © 2002 KNEZEVICH & ASSOCIATES, INC.

HT100 LICENSED BY HI-TECH SHUTTER GROUP, INC.

PREMIER ACCORDION SHUTTER

450 West McNab Road
Ft. Lauderdale, FL 33309
1-800-HURRICANE

All Broward Hurricane Panel, Inc.

Roll-Up
SHADES & SHUTTERS

V.J. KNEZEVICH
PROFESSIONAL ENGINEER
FL License No: PE 0010983

MAY 10 2002

revisions

no	date	by	description
2	10/10/96		COUNTY COMMENTS
3	11/26/97	JWK	REVISE FASTENERS
4	01/14/98	JWK	FASTENER NOTES
5	04/30/98	JWK	SLAT 2/REV 2,4 DESC.
6	06/10/99	VJK	CENTER MATES/FASTENERS
7	04/02/02	VJK	FBC2001 GENERAL NOTES
8	05/10/02	WAS	GENERAL NOTES

HTSG I.D. # 05100296168D

date 07/23/1996	
scale AS NOTED	drawn by MCR
design by VJK	checked by VJK
drawing no. 99-817	

sheet 1 of 6

Print Information: J:\CADD\Associations\Hi-Tech\ALL-BWD\99-817\R8-sub\99-817-01.dwg AVazquez 05/13/2002 09:23:40am

05/10/02 15:21

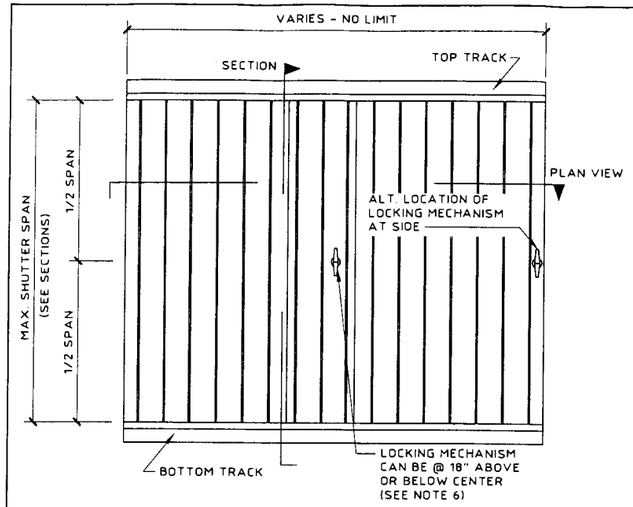

TYPICAL ELEVATION
N.T.S.

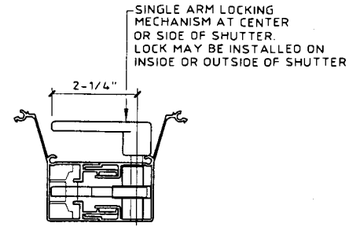

SINGLE ARM LOCK
N.T.S.

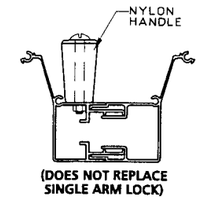

OPTIONAL CLOSER HANDLE
N.T.S.

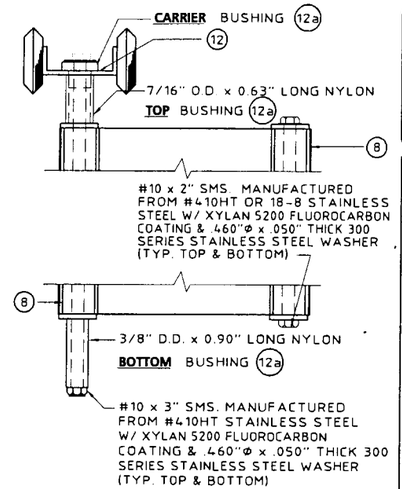

SCREW BUSHING & ROLLER/ BUSHING ASSEMBLY
SCALE: HALF SIZE

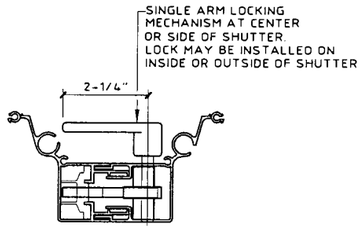

SINGLE ARM LOCK
N.T.S.

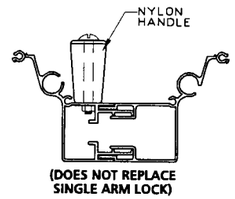

OPTIONAL CLOSER HANDLE
N.T.S.

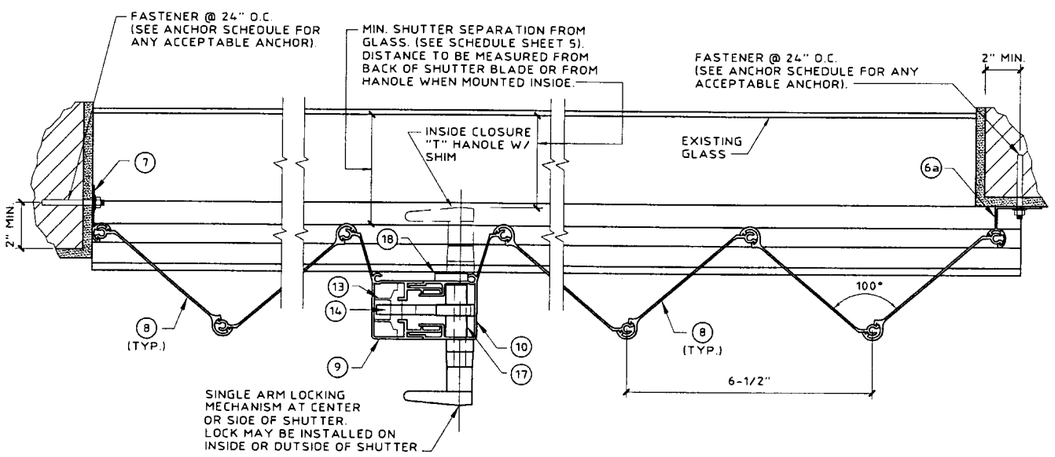

TYPICAL PLAN VIEW
SCALE: 3" = 1'-0"

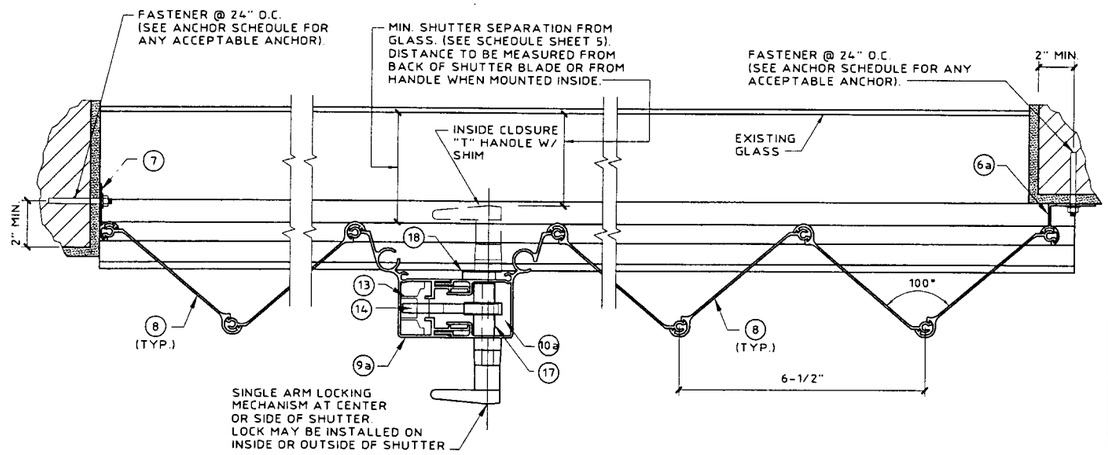

OPTIONAL PLAN VIEW
SCALE: 3" = 1'-0"

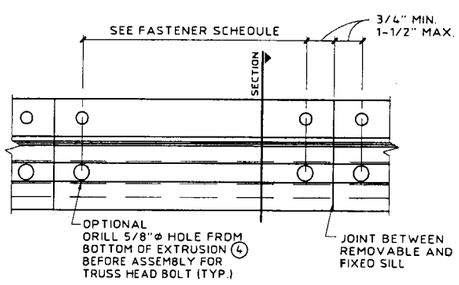

PLAN VIEW

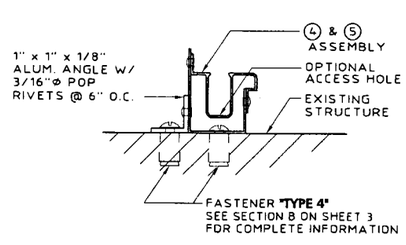

SECTION

REMOVABLE FLOOR TRACK DETAIL
SCALE : 3"= 1'- 0"

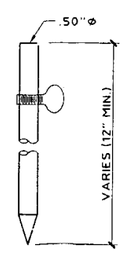

USED WITH PIECES (9a) AND (10a)

LOCKING PIN
SCALE: 1-1/2" = 1'-0"

PRODUCT REVISED
as complying with the Florida Buiding Code
Aceceptance No 02-0502.08
Expiration Date January 07, 2003
By
Miami Dade Product Control Division

KNEZEVICH & ASSOCIATES, INC.
CONSULTING ENGINEERS • PRODUCT TESTING
1260 N. UNIVERSITY DRIVE, SUITE 180 • FORT LAUDERDALE, FL 33322
TEL: (954) 382-2800 • FAX: (954) 382-2989 • FLORIDA COA #3205
WEBSITE: WWW.KNEZEVICH.COM • E-MAIL: KA@KNEZEVICH.COM

COPYRIGHT © 2002 KNEZEVICH & ASSOCIATES, INC
HT100 LICENSED BY HI-TECH SHUTTER GROUP, INC.

PREMIER ACCORDION SHUTTER
450 West McNab Road Pompano Beach, FL 33069 1-800-HURRICANE
ALL BROWARD COUNTY HURRICANE PANEL, INC.
Wind-Up SHADES & SHUTTERS

V.J. KNEZEVICH
PROFESSIONAL ENGINEER
FL License No: PE 0010983
MAY 10 2002

revisions

no	date	by	description
2	10/10/96		COUNTY COMMENTS
3	11/26/97	JWK	REVISE FASTENERS
4	01/14/98	JWK	FASTENER NOTES
5	06/30/98	JWK	SLAT 2/REV 2.2 DESC
6	06/10/99	VJK	CENTER MATES/FASTENERS
7	04/02/02	VJK	FBC2001 GENERAL NOTES
8	05/10/02	HAS	GENERAL NOTES

HTSG I.D. # 05100296168D

date 07/23/1996
scale AS NOTED
drawn by MCR
design by VJK
checked by VJK
drawing no. 99-817
sheet 2 of 6

Print Information: J:\CADD\Associations\Hi-Tech\ALL-BWD\99-817\R8-sub\99-817-02.dwg AVazquez 05/13/2002 09:24:05am

05/10/02 15:21

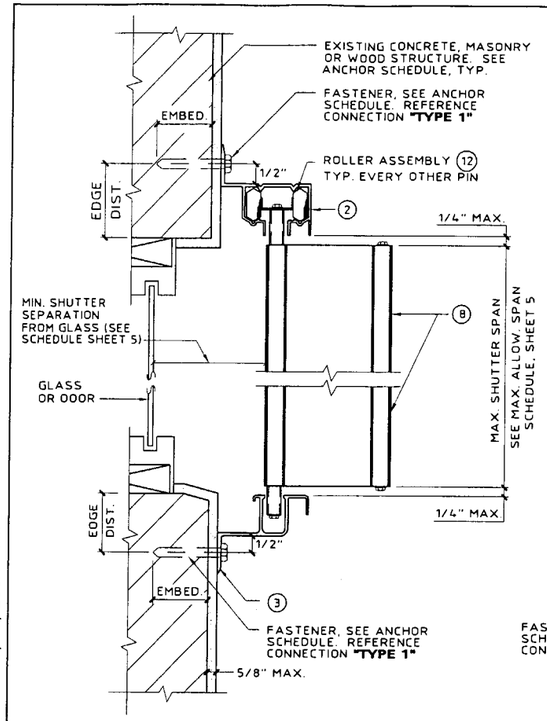

(A) WALL MOUNT SECTION
SCALE: 3" = 1'-0"

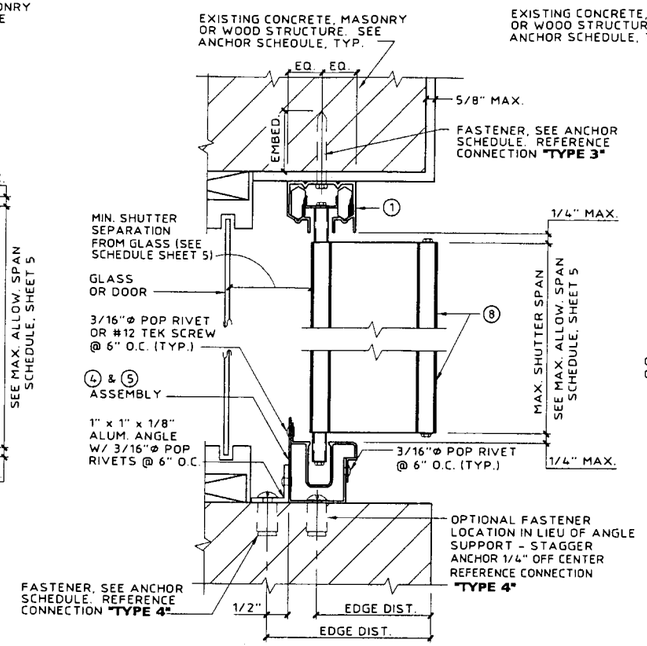

(B) CEILING/INSIDE MOUNT SECTION
SCALE: 3" = 1'-0"

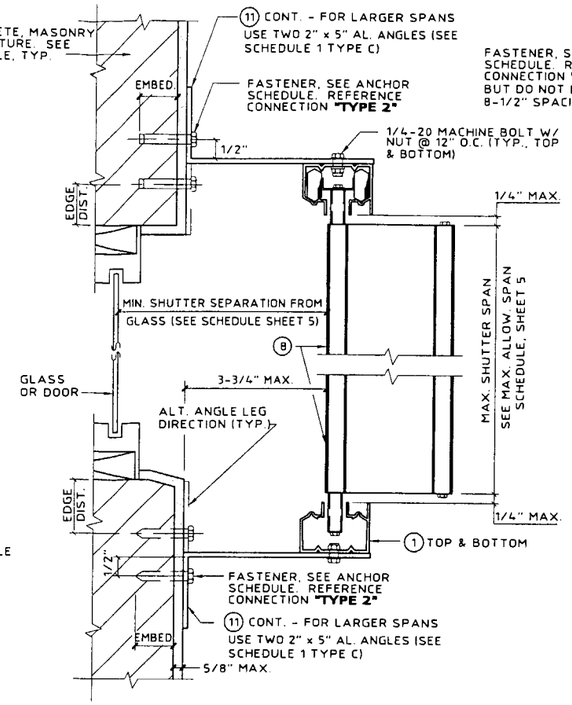

(C) BUILD-OUT MOUNT SECTION
SCALE: 3" = 1'-0"

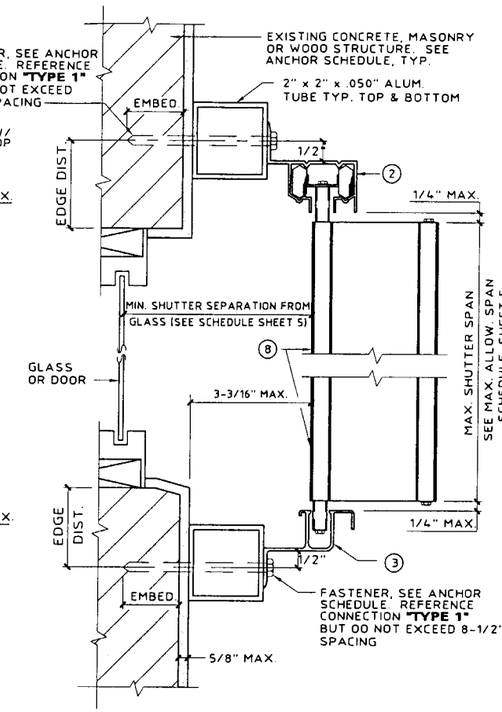

(D) BUILD-OUT MOUNT SECTION
SCALE: 3" = 1'-0"

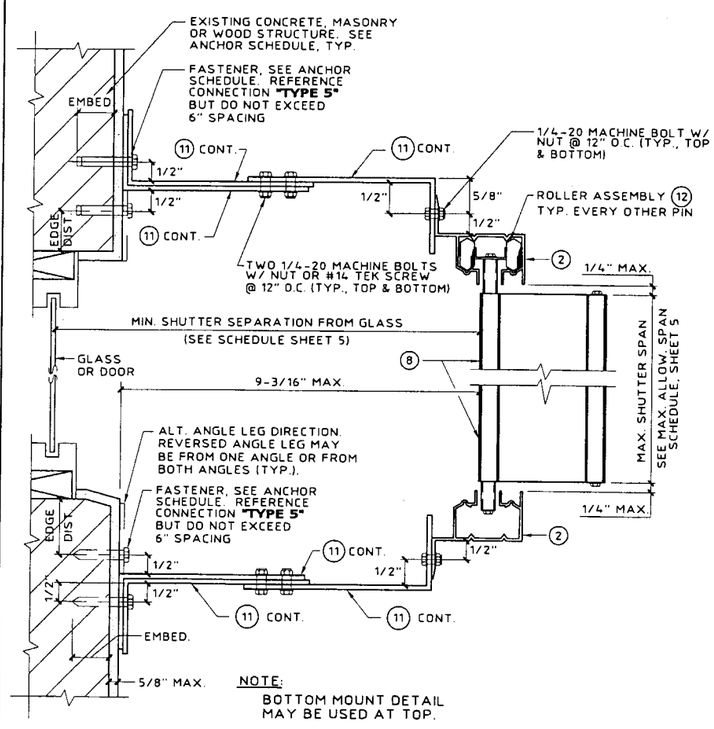

(E) BUILD-OUT MOUNT SECTION
SCALE: 3" = 1'-0"

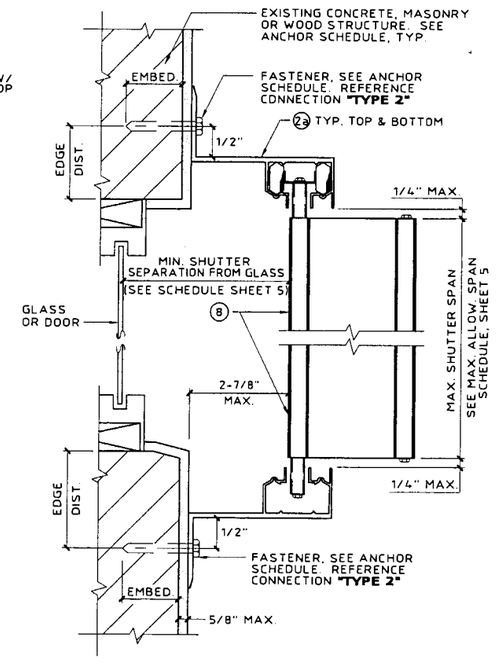

(F) BUILD-OUT MOUNT SECTION
SCALE: 3" = 1'-0"

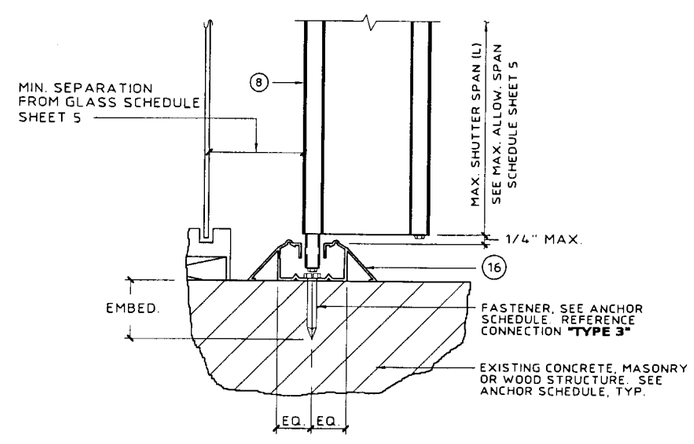

(G) FLOOR MOUNT SECTION
SCALE: 3" = 1'-0"

PRODUCT REVISED
as complying with the Florida Building Code
Acceptance No 02-0502.08
Expiration Date January 27, 2003
By
Miami Dade Product Control Division

KNEZEVICH & ASSOCIATES, INC.
CONSULTING ENGINEERS • PRODUCT TESTING
1260 N. UNIVERSITY DRIVE, SUITE 180 • FORT LAUDERDALE, FL 33322
TEL: (954) 382-2800 • FAX: (954) 382-2989 • FLORIDA COA #3205
WEBSITE: WWW.KNEZEVICH.COM • E-MAIL: KA@KNEZEVICH.COM

COPYRIGHT © 2002 KNEZEVICH & ASSOCIATES, INC

HT100 LICENSED BY HI-TECH SHUTTER GROUP, INC.

PREMIER ACCORDION SHUTTER
450 West McNab Road Ft. Lauderdale, FL 33309 1-800-HURRICANE
ALL BROWARD
HURRICANE PANEL, INC.
SHADES & SHUTTERS

V.J. KNEZEVICH
PROFESSIONAL ENGINEER
FL License No: PE 0010983
MAY 1 0 2002

revisions

no	date	by	description
2	10/10/96		COUNTY COMMENTS
3	11/26/97	JWK	REVISE FASTENERS
4	01/14/98	JWK	FASTENER NOTES
5	06/30/98	JWK	SLAT 2/REV 2.4 DESC.
6	06/09/99	VJK	CENTER MATES/FASTENERS
7	06/02/02	VJK	FBC2001-GENERAL NOTES
8	05/10/02	MAS	GENERAL NOTES

HTSG I.D. # 051002961168D

date 07/23/1996	
scale AS NOTED	drawn by MCR
design by VJK	checked by VJK

drawing no. 99-817
sheet 3 of 6

Print Information: J:\CADD\Associations\Hi-Tech\ALL-BWD\99-817\R8-sub\99-817-03.dwg AVazquez 05/13/2002 09:24:43am
05/10/02 15:21

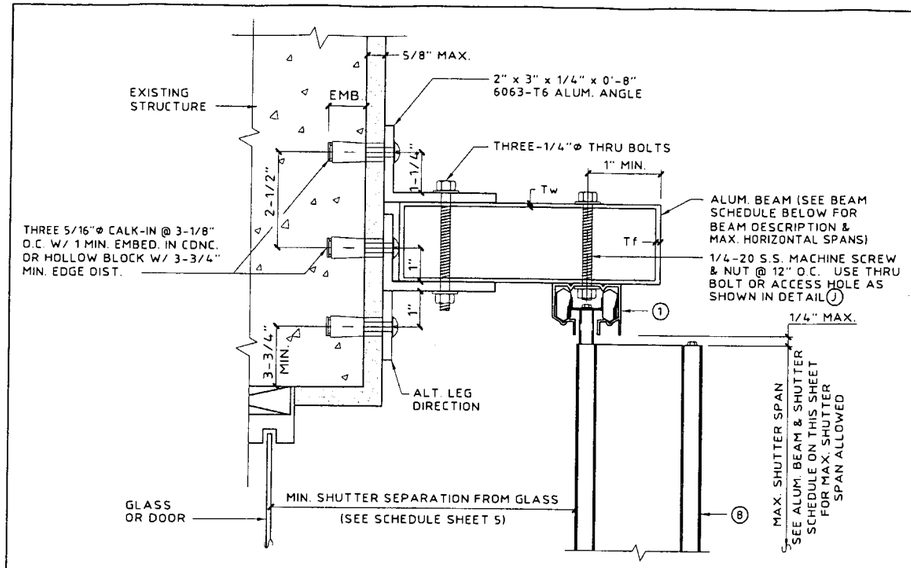

(MAX. DESIGN LOAD ± 72 PSF)

H TOP SUPPORT BEAM DETAIL
SCALE: 3" = 1'-0"

ALUM. BEAM & SHUTTER SCHEDULE		
DESCRIPTION	SHUTTER SPAN	BEAM SPAN
2" x 5" Tw = .125" Tf = .125"	5'-0"	9'-5"
	8'-0"	8'-1"
	10'-0"	7'-6"
2" x 8" Tw = .072" Tf = .224"	5'-0"	14'-0"
	8'-0"	12'-0"
	10'-0"	11'-1"
2" x 9" Tw = .072" Tf = .224"	5'-0"	15'-5"
	8'-0"	13'-2"
	10'-0"	12'-3"

NOTE:
1. USE BEAM SCHEDULE FOR DETAILS H AND J.
2. SHUTTER SPAN TO BE LIMITED TO THOSE SHOWN IN TABLE, SHEET 5.
3. BEAM SPAN SHALL BE CONSIDERED AS THE DISTANCE FROM ℄ OF SUPPORT TO ℄ OF SUPPORT.

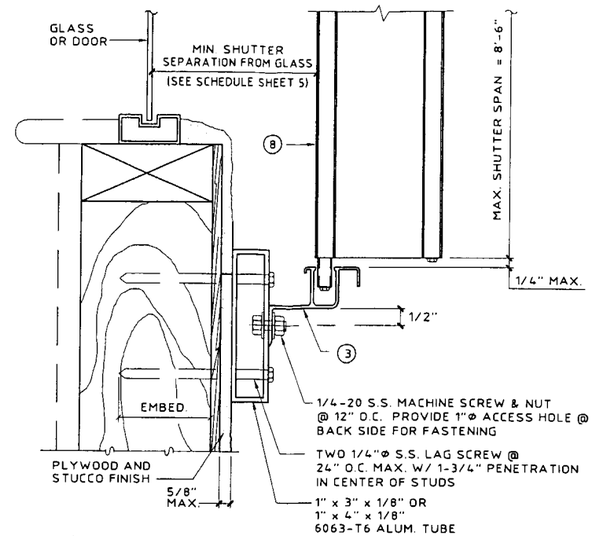

(MAX. DESIGN LOAD ± 72 PSF)

I WALL MOUNT SECTION - USING ALUM. TUBE
SCALE: 3" = 1'-0"

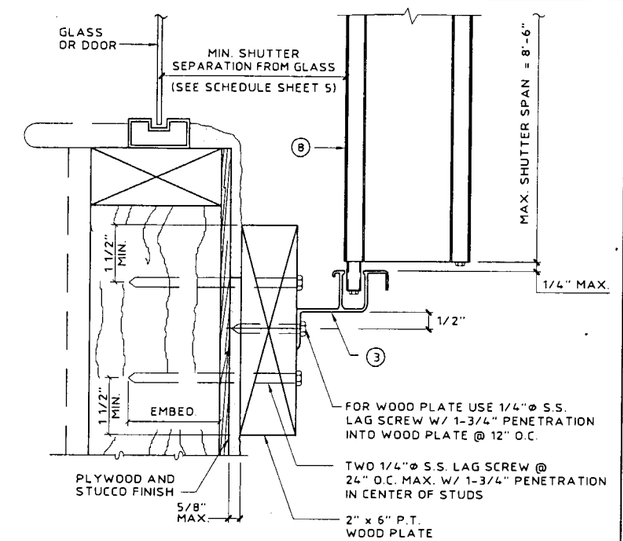

(MAX. DESIGN LOAD ± 72 PSF)

K WALL MOUNT SECTION - USING 2" x 6" WOOD PLATE
SCALE: 3" = 1'-0"

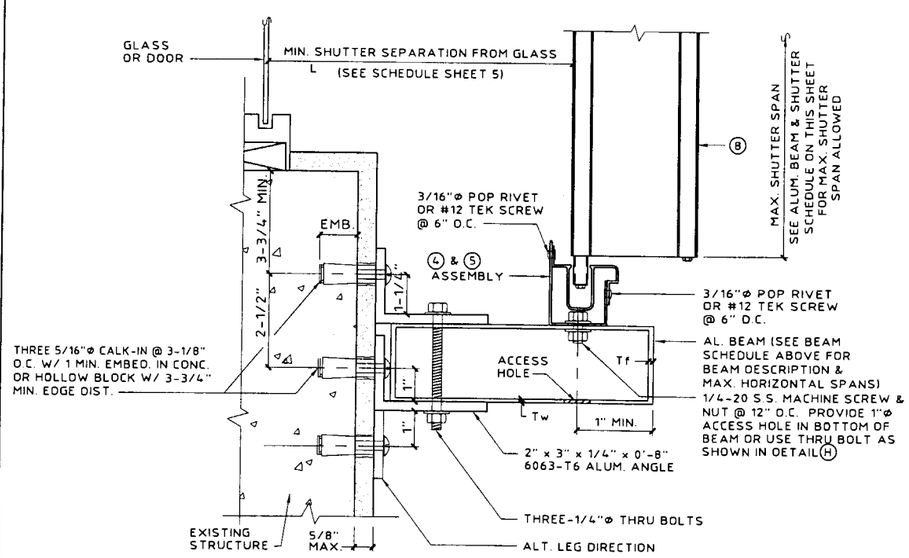

(MAX. DESIGN LOAD ± 72 PSF)

J BOTTOM SUPPORT BEAM DETAIL
SCALE: 3" = 1'-0"

PRODUCT REVISED
as complying with the Florida Buiding Code
Acceptance No 02-0502.08
Expiration Date Tuesday 27 2003
By
Miami Dade Product Control Division

KNEZEVICH & ASSOCIATES, INC.
CONSULTING ENGINEERS • PRODUCT TESTING
1260 N. UNIVERSITY DRIVE, SUITE 180 • FORT LAUDERDALE, FL 33322
TEL: (954) 382-2800 • FAX: (954) 382-2989 • FLORIDA COA #3205
WEBSITE: WWW.KNEZEVICH.COM • E-MAIL: KA@KNEZEVICH.COM

COPYRIGHT © 2002 KNEZEVICH & ASSOCIATES, INC

HT100 LICENSED BY HI-TECH SHUTTER GROUP, INC.

PREMIER ACCORDION SHUTTER
450 West McNab Road Ft. Lauderdale, FL 33309 1-800-HURRICANE
ALL BROWARD COUNTY
HURRICANE Wind-Up PANEL, INC.
SHADES & SHUTTERS

V.J. KNEZEVICH
PROFESSIONAL ENGINEER
FL License No: PE0010983
MAY 10 2002

revisions			
no	date	by	description
2	10/10/96		COUNTY COMMENTS
3	11/26/97	JWK	REVISE FASTENERS
4	01/14/98	JWK	FASTENER NOTES
5	04/30/98	JWK	SLAT 2/REV 2.4 DESC.
6	06/10/99	VJK	CENTER MATES/FASTENERS
7	06/02/02	VJK	FBC2001 GENERAL NOTES
8	05/10/02	MAS	GENERAL NOTES

HTSG I.D. # 05100296168D

date 07/23/1996	
scale AS NOTED	drawn by MCR
design by VJK	checked by VJK
drawing no. 99-817	
sheet 4 of 6	

Print Information: J:\CADD\Associations\Hi-Tech\ALL-BWD\99-817\R8-sub\99-817-04.dwg AVazquez 05/13/2002 09:24:56am
05/10/02 15:21

TABLE 1

MAXIMUM ALLOWABLE SPAN SCHEDULE

NEG. DESIGN LOAD (PSF)	TYPE A ALL MOUNTING CONDITIONS EXCEPT Ⓒ Ⓔ Ⓕ (FT - IN)	TYPE B DETAIL Ⓕ OR DETAIL Ⓒ W/ SINGLE ANGLE REQUIRED 3-3/4" MAX. B.O. (FT - IN)	TYPE C DETAIL Ⓒ DOUBLE ANGLE REQUIRED 3-3/4" MAX. B.O. (FT - IN)	TYPE D DETAIL Ⓔ 9-3/16" MAX. B.O. (FT - IN)
30.0	13 - 1	12 - 4	13 - 1	12 - 7
38.0	13 - 1	11 - 0	13 - 1	11 - 2
40.0	12 - 11	10 - 8	12 - 5	10 - 11
48.0	12 - 4	9 - 9	10 - 4	10 - 0
52.0	12 - 1	9 - 4	9 - 7	9 - 7
56.0	11 - 11	9 - 0	9 - 0	9 - 3
61.5	11 - 7	8 - 7	8 - 7	8 - 10
63.3	11 - 6	8 - 6	8 - 6	8 - 8
66.8	10 - 11	8 - 3	8 - 3	8 - 5
67.5	10 - 9	8 - 3	8 - 3	8 - 5
71.2	10 - 3	8 - 0	8 - 0	8 - 2
75.0	9 - 8	7 - 8	7 - 8	8 - 0
81.4	8 - 11	7 - 0	7 - 0	7 - 4
86.8	8 - 5	6 - 7	6 - 7	6 - 10
91.4	8 - 0	6 - 3	6 - 3	6 - 6
100.0	7 - 3	5 - 9	5 - 9	6 - 0
110.0	6 - 7	5 - 2	5 - 2	5 - 5
120.0	6 - 1	4 - 9	4 - 9	5 - 0
130.0	5 - 7	4 - 5	4 - 5	4 - 7
140.0	5 - 2	4 - 1	4 - 1	4 - 3
150.0	4 - 10	3 - 10	3 - 10	4 - 0
160.0	4 - 6	3 - 7	3 - 7	3 - 9
170.0	4 - 3	3 - 4	3 - 4	3 - 6
180.0	4 - 0	3 - 2	3 - 2	3 - 4
190.0	3 - 10	3 - 0	3 - 0	3 - 1
200.0	3 - 7	2 - 10	2 - 10	3 - 0
210.0	3 - 5	2 - 8	2 - 8	2 - 10

NOTES:

1. REFERENCE APPROPRIATE COLUMN IN TABLE 1 BASED ON MOUNTING CONDITION IN FIELD.
2. FOR DESIGN LOADS BETWEEN TABULATED VALUES, USE NEXT HIGHER LOAD OR LINEAR INTERPOLATION MAY BE USED TO DETERMINE ALLOWABLE SPANS.
3. ENTER TABLE 1 WITH NEGATIVE DESIGN LOAD TO DETERMINE MAX. SHUTTER SPAN.
4. ENTER TABLE 2 WITH POSITIVE DESIGN LOAD TO DETERMINE MIN. SHUTTER SEPARATION FROM GLASS.

TABLE 2

MINIMUM SHUTTER SEPARATION FROM GLASS (IN)

POSITIVE DESIGN LOAD (W) (PSF)	ACTUAL SPAN (FT - IN)	MIN. SEPARATION FROM GLASS FOR INSTALLATIONS LESS THAN 30' ABOVE GRADE (INCHES)	MIN. SEPARATION FROM GLASS FOR INSTALLATIONS GREATER THAN 30' ABOVE GRADE (INCHES)
30.0	5 - 0	2-7/8	1-1/2
	7 - 0	2-7/8	1-5/8
	8 - 0	2-7/8	1-5/8
	11 - 0	3	2-1/8
	13 - 1	3-3/4	2-3/4
40.0	5 - 0	2-7/8	1-1/2
	7 - 0	2-7/8	1-5/8
	8 - 0	2-7/8	1-5/8
	11 - 0	3	2-1/4
	12 - 11	3-3/4	3
50.0	5 - 0	2-7/8	1-1/2
	7 - 0	2-7/8	1-5/8
	8 - 0	2-7/8	1-3/4
	11 - 0	3	2-1/2
	12 - 2	3-3/4	3
60.0	5 - 0	2-7/8	1-1/2
	7 - 0	2-7/8	1-5/8
	8 - 0	2-7/8	1-3/4
	11 - 0	3	1-3/4
	11 - 8	3-3/4	3
70.0	5 - 0	2-7/8	1-1/2
	7 - 0	2-7/8	1-5/8
	8 - 0	2-7/8	1-7/8
	9 - 6	3	2-1/4
	10 - 4	3	2-5/8
80.0	5 - 0	2-7/8	1-1/2
	7 - 0	2-7/8	1-3/4
	8 - 0	2-7/8	1-7/8
	11 - 0	3-1/8	3-1/8
	12 - 1	4	4
90.0	5 - 0	2-7/8	1-1/2
	7 - 0	2-7/8	1-3/4
	8 - 0	2-7/8	2
	11 - 0	3-3/8	3-3/8
	11 - 6	3-7/8	4
100.0	5 - 0	2-7/8	1-1/2
	7 - 0	2-7/8	1-3/4
	8 - 0	2-7/8	2
	9 - 0	3	2-3/4
	10 - 3	3	3

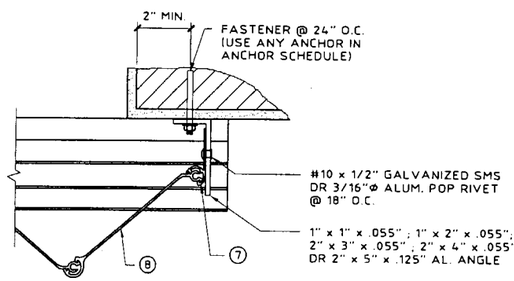

L ALT. CLOSURE DETAIL
SCALE: 3" = 1'-0"

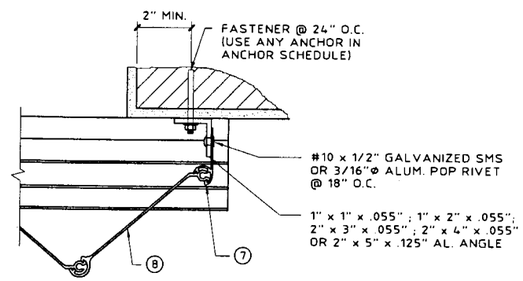

M ALT. CLOSURE DETAIL
SCALE: 3" = 1'-0"

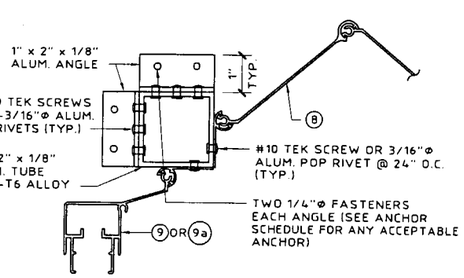

NOTE:
EITHER CONDITION MAY BE TYPICAL FOR EITHER SIDE

N CORNER CLOSURE DETAIL
SCALE: 3" = 1'-0"

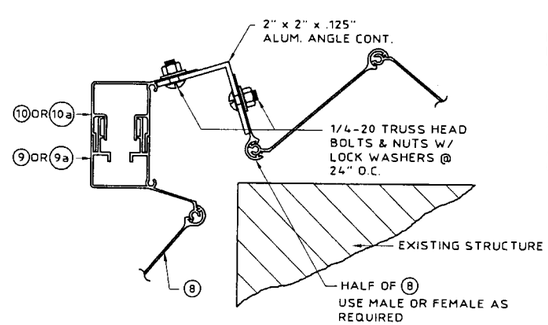

P ALT. CORNER CLOSURE DETAIL
SCALE: 3" = 1'-0"

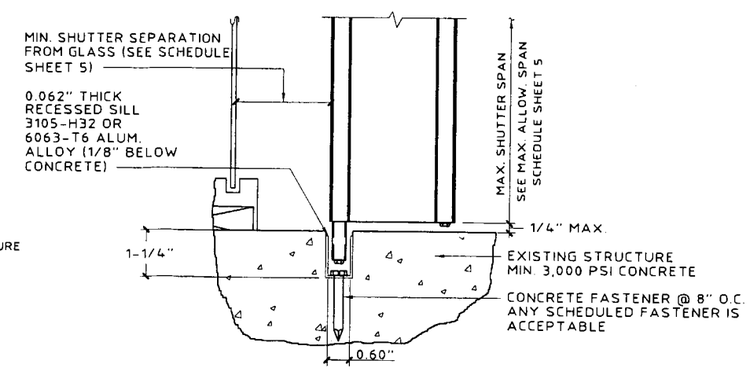

Q ALTERNATE FLOOR MOUNT DETAIL
SCALE: 3" = 1'-0"

PRODUCT REVISED
as complying with the Florida Buiding Code
Acceptance No 02-0502.08
Expiration Date January 27, 2005
By
Miami Dade Product Control Division

KNEZEVICH & ASSOCIATES, INC.
CONSULTING ENGINEERS • PRODUCT TESTING
1260 N. UNIVERSITY DRIVE, SUITE 180 • FORT LAUDERDALE, FL 33322
TEL: (954) 382-2800 • FAX: (954) 382-2989 • FLORIDA COA #3205
WEBSITE: WWW.KNEZEVICH.COM • E-MAIL: KA@KNEZEVICH.COM

COPYRIGHT © 2002 KNEZEVICH & ASSOCIATES, INC

HT100 LICENSED BY HI-TECH SHUTTER GROUP, INC.

PREMIER ACCORDION SHUTTER
450 West McNab Road Ft. Lauderdale, FL 33309 1-800-HURRICANE
ALL BROWARD HURRICANE Wind-Up PANEL, INC.
SHADES & SHUTTERS

V.J. KNEZEVICH
PROFESSIONAL ENGINEER
FL License No: PE 0010983

MAY 1 0 2002

revisions

no	date	by	description
2	10/10/96		COUNTY COMMENTS
3	11/26/97	JWK	REVISE FASTENERS
4	01/14/98	JWK	FASTENER NOTES
5	04/30/98	JWK	SLAT 2/REV.2,4 DESC.
6	06/10/99	VJK	CENTER MATES/FASTENERS
7	04/02/02	VJK	FBC2001 GENERAL NOTES
8	05/10/02	VAS	GENERAL NOTES

HTSG I.D. # 051002961 68D

date 07/23/1996
scale AS NOTED
drawn by MCR
design by VJK
checked by VJK
drawing no. 99-817
sheet 5 of 6

Print Information: J:\CADD\Associations\Hi-Tech\ALL-BWD\99-817\R8-sub\99-817-05.dwg AVazquez 05/13/2002 09:25:12am
05/10/02 15:21

ANCHOR SCHEDULE

FASTENER MAXIMUM SPACING (INCHES) REQUIRED FOR VARIOUS DESIGN LOADS AND SPANS

EXISTING STRUCTURE	ANCHOR TYPE	LOAD (W) PSF MAX. (SEE NOTE 1)	MIN. 2" EDGE DISTANCE																				MIN. 3" EDGE DISTANCE																	
			SPANS UP TO 5'-8" (SEE NOTE 1)					SPANS UP TO 8'-0" (SEE NOTE 1)					SPANS UP TO 9'-0" (SEE NOTE 1)					SPANS UP TO 13'-1" (SEE NOTE 1)					SPANS UP TO 5'-8" (SEE NOTE 1)					SPANS UP TO 8'-0" (SEE NOTE 1)					SPANS UP TO 9'-0" (SEE NOTE 1)					SPANS UP TO 13'-1" (SEE NOTE 1)				
			CONNECTION TYPE					CONNECTION TYPE					CONNECTION TYPE					CONNECTION TYPE					CONNECTION TYPE					CONNECTION TYPE					CONNECTION TYPE					CONNECTION TYPE				
			1	2	3	4	5	1	2	3	4	5	1	2	3	4	5	1	2	3	4	5	1	2	3	4	5	1	2	3	4	5	1	2	3	4	5	1	2	3	4	5
CONCRETE	1/4"Ø ITW TAPCON W/ 1-1/4" MIN. EMBEDMENT (MIN. 3,100 P.S.I. CONCRETE)	48.0	12	12	12	7	9	12	12	10	5	7	12	12	9	4	6	6	12	6	3	4	12	12	12	8	11	12	12	12	5	7	12	12	11	5	7	7	12	8	3	4
		62.0	12	12	11	5	7	12	12	8	3	5	9	12	7	3	4	4	11	5		3	12	12	12	6	8	12	12	10	4	6	10	12	9	4	5	4	12	7	3	4
		72.0	12	12	10	4	6	8	12	7	3	4	5	12	6	3	4	4	11	5		3	12	12	12	5	7	9	12	8	3	5	6	12	7	3	4	4	12	7	3	4
		92.0	11	12	7	3	5	4	11	5		3	4	11	5		3	4	11	5		3	12	12	9	4	5	4	12	7	3	4	4	12	7	3	4	4	12	7	3	4
		210.0	4	11	5		3	4	11	5		3	4	11	5		3	4	11	5		3	4	12	7	3	4	4	12	7	3	4	4	12	7	3	4	4	12	7	3	4
	* * 1/4"Ø ELCO MALE/ FEMALE "PANELMATE" W/ 1-1/4 MIN. EMBEDMENT & 1/4-20 MACHINE SCREW WITH NUT (MIN. 3,000 P.S.I. CONCRETE)	48.0	12	12	11	5	7	12	12	8	3	5	12	12	7	3	5	5	10	4		3	12	12	12	6	8	12	12	9	4	5	12	12	8	3	5	5	10	5		3
		62.0	12	12	8	4	6	11	12	6	3	4	7	11	5		3	3	8	4			12	12	10	4	6	12	12	7	3	4	7	11	6		4	3	9	4		3
		72.0	12	12	7	3	5	6	11	5		3	4	9	4		3	3	8	4			12	12	8	4	5	6	11	6		3	4	10	5		3	3	9	4		3
		92.0	9	12	5		4	3	8	4			3	8	4			3	8	4			9	12	6	3	4	3	9	4		3	3	9	4		3	3	9	4		3
		210.0	3	8	4			3	8	4			3	8	4			3	8	4			3	9	4		3	3	9	4		3	3	9	4		3	3	9	4		3
	* 1/4"Ø POWERS CALK-IN W/ 7/8" EMBEDMENT & 1/4-20 STAINLESS STEEL MACHINE SCREW (MIN. 3,000 P.S.I. CONCRETE)	48.0	12	12	12	9	12	12	12	11	6	11	12	12	10	6	10	10	12	7	4	7	12	12	12	12	12	12	12	12	9	12	12	12	12	8	12	12	12	11	6	8
		62.0	12	12	12	7	12	12	12	9	5	9	12	12	8	4	8	7	12	6	3	6	12	12	12	10	12	12	12	12	7	11	12	12	12	6	10	9	12	10	5	7
		72.0	12	12	11	6	11	12	12	7	4	7	9	12	7	4	6	7	12	6	3	6	12	12	12	9	12	12	12	12	6	9	12	12	11	5	8	9	12	10	5	7
		92.0	12	12	8	5	8	7	12	6	3	6	7	12	6	3	6	7	12	6	3	6	12	12	12	7	10	9	12	10	5	7	9	12	10	5	7	9	12	10	5	7
		210.0	7	12	6	3	6	7	12	6	3	6	7	12	6	3	6	7	12	6	3	6	9	12	10	5	7	9	12	10	5	7	9	12	10	5	7	9	12	10	5	7
	1/4"Ø POWERS ZAMAC NAIL-IN W/ 1-1/8" MIN. EMBEDMENT (MIN. 3,000 P.S.I. CONCRETE)	48.0	12	12	12	5	8	12	12	9	4	5	12	12	8	3	5	5	10	5		3	12	12	12	7	9	12	12	11	4	6	12	12	10	4	5	5	11	6	3	3
		62.0	12	12	10	4	6	12	12	7	3	4	7	11	6		3	3	9	4		3	12	12	12	5	7	12	12	8	3	5	8	12	7	3	4	3	10	5		3
		72.0	12	12	8	3	5	6	11	6		3	4	10	5		3	3	9	4		3	12	12	10	4	6	7	12	7	3	4	5	11	6		3	3	10	5		3
		92.0	9	12	6	3	4	3	9	4		3	3	9	4		3	3	9	4		3	10	12	8	3	4	3	10	5		3	3	10	5		3	3	10	5		3
		210.0	3	9	4		3	3	9	4		3	3	9	4		3	3	9	4		3	3	10	5		3	3	10	5		3	3	10	5		3	3	10	5		3
HOLLOW CONCRETE BLOCK	1/4"Ø ITW TAPCON W/ 1-1/4" MIN. EMBEDMENT	48.0	12	12	9	4	5	11	11	6		3	10	10	5		3	3	6	3			12	12	11	4	6	12	12	7	3	4	11	11	6		3	3	7	4		
		62.0	12	12	6	3	4	8	8	4			4	7	4				5	3			12	12	8	3	4	9	9	6		3	5	8	5				6	4		
		72.0	10	10	6		3	4	7	4			3	6	3				5	3			12	12	7	3	4	4	8	5			3	7	4				6	4		
		92.0	6	8	4				5	3				5	3				5	3			7	9	5		3		6	4				6	4				6	4		
		210.0		5	3				5	3				5	3				5	3				6	4				6	4				6	4				6	4		
	* * 1/4"Ø ELCO MALE/ FEMALE "PANELMATE" W/ 1-1/4 MIN. EMBEDMENT & 1/4-20 MACHINE SCREW WITH NUT	48.0	12	12	11	5	7	12	12	8	3	5	12	12	7	3	5	5	10	4		3	12	12	12	6	8	12	12	9	4	5	12	12	8	3	5	5	10	5		3
		62.0	12	12	8	4	6	11	12	6	3	4	7	11	5		3	3	8	4			12	12	10	4	6	12	12	7	3	4	7	11	6		4	3	9	4		3
		72.0	12	12	7	3	5	6	11	5		3	4	9	4		3	3	8	4			12	12	8	4	5	6	11	6		3	4	10	5		3	3	9	4		3
		92.0	9	12	5		4	3	8	4			3	8	4			3	8	4			9	12	6	3	4	3	9	4		3	3	9	4		3	3	9	4		3
		210.0	3	8	4			3	8	4			3	8	4			3	8	4			3	9	4		3	3	9	4		3	3	9	4		3	3	9	4		3
	* 1/4"Ø POWERS CALK-IN W/ 7/8" EMBEDMENT & 1/4-20 STAINLESS STEEL MACHINE SCREW	48.0	12	12	9	4	6	12	12	6	3	4	12	12	6	3	4	4	8	4		3	12	12	12	6	8	12	12	10	4	6	12	12	9	4	5	5	11	6		3
		62.0	12	12	7	3	5	10	11	5		3	6	10	4		3	3	7	3			12	12	11	5	6	12	12	8	3	4	7	12	7	3	4	3	9	5		3
		72.0	12	12	6	3	4	5	9	4		3	4	8	4			3	7	3			12	12	10	4	5	7	12	7	3	4	5	10	6		3	3	9	5		3
		92.0	8	10	5		3	3	7	3			3	7	3			3	7	3			10	12	7	3	4	3	9	5		3	3	9	5		3	3	9	5		3
		210.0	3	7	3			3	7	3			3	7	3			3	7	3			3	9	5		3	3	9	5		3	3	9	5		3	3	9	5		3
	1/4"Ø POWERS ZAMAC NAIL-IN W/ 1-1/8" MIN. EMBEDMENT	48.0	12	12	9	4	5	10	10	6		3	9	9	6		3	3	6	4			12	12	11	4	5	12	12	8	3	4	10	10	7		3	3	7	4		
		62.0	11	11	7	3	4	7	8	5			4	7	4				5	3			12	12	8	3	4	8	9	6		3	5	8	5				6	4		
		72.0	10	10	6		3	4	7	4				6	4				5	3			11	11	7	3	3	4	8	5			3	7	4				6	4		
		92.0	6	8	4				5	3				5	3				5	3			6	9	6		3		6	4				6	4				6	4		
		210.0		5	3				5	3				5	3				5	3				6	4				6	4				6	4				6	4		

ANCHOR SCHEDULE

FASTENER MAXIMUM SPACING (INCHES) REQUIRED FOR VARIOUS DESIGN LOADS AND SPANS

EXISTING STRUCTURE	ANCHOR TYPE	LOAD (W) PSF MAX. (SEE NOTE 1)	MIN. 3/4" EDGE DISTANCE																																					
			SPANS UP TO 5'-8" (SEE NOTE 1)					SPANS UP TO 8'-0" (SEE NOTE 1)					SPANS UP TO 9'-0" (SEE NOTE 1)					SPANS UP TO 13'-1" (SEE NOTE 1)																				
			CONNECTION TYPE					CONNECTION TYPE					CONNECTION TYPE					CONNECTION TYPE																				
			1	2	3	4	5	1	2	3	4	5	1	2	3	4	5	1	2	3	4	5																		
WOOD	1/4"Ø WOOD LAG W/ 1-3/4" MIN. THREAD PENETRATION SHEAR PARALLEL OR PERP. TO WOOD GRAIN	48.0	12	12	11	7	12	12	12	8	5	11	12	12	7	4	10	10	12	4	3	7																		
		62.0	12	12	8	5	12	12	12	6	4	8	12	12	5	3	7	7	12	4		6																		
		72.0	12	12	7	5	10	12	12	5	3	7	9	12	4	3	6	7	12	4		6																		
		92.0	12	12	5	3	8	7	12	4		6	7	12	4		6	7	12	4		6																		
		210.0	7	12	4		6	7	12	4		6	7	12	4		6	7	12	4		6																		

ANCHOR NOTES:

1. **SPANS AND LOADS SHOWN HERE ARE FOR DETERMINING ANCHOR SPACING ONLY. ALLOWABLE STORM SHUTTER SPANS FOR SPECIFIC LOADS MUST BE LIMITED TO THOSE SHOWN IN TABLE 1, SHEET 5.**
2. ENTER ANCHOR SCHEDULE BASED ON THE EXISTING STRUCTURE MATERIAL, ANCHOR TYPE AND EDGE DISTANCE. SELECT DESIGN LOAD GREATER THAN OR EQUAL TO NEGATIVE DESIGN LOAD ON SHUTTER AND SELECT SPAN GREATER THAN OR EQUAL TO SHUTTER SPAN.
3. EXISTING STRUCTURE MAY BE CONCRETE, HOLLOW BLOCK OR WOOD FRAMING. REFERENCE ANCHOR SCHEDULE FOR PROPER ANCHOR TYPE BASED ON TYPE OF EXISTING STRUCTURE AND APPROPRIATE CONNECTION TYPE. SEE MOUNTING SECTION DETAILS FOR IDENTIFICATION OF CONNECTION TYPE.
4. ANCHORS SHALL BE INSTALLED IN ACCORDANCE WITH MANUFACTURERS' RECOMMENDATIONS.
5. MINIMUM EMBEDMENT AND EDGE DISTANCE EXCLUDES WALL FINISH OR STUCCO.
6. WHERE EXISTING STRUCTURE IS WOOD FRAMING, WOOD FRAMING CONDITIONS VARY. FIELD VERIFY THAT FASTENERS ARE INTO ADEQUATE WOOD FRAMING MEMBERS, NOT PLYWOOD. FASTENING TO PLYWOOD IS ACCEPTABLE ONLY FOR SIDE CLOSURE PIECES.
7. WHERE LAG SCREWS FASTEN TO NARROW FACE OF STUD FRAMING, FASTENER SHALL BE LOCATED IN CENTER OF NOMINAL 2" x 4" (MIN.) WOOD STUD. 3/4" EDGE DISTANCE IS ACCEPTABLE FOR WOOD FRAMING. WOOD STUD SHALL BE "SOUTHERN PINE" G=0.55 OR GREATER DENSITY. LAG SCREWS SHALL HAVE PHILLIPS PAN HEAD OR HEX HEAD.
8. MACHINE SCREWS SHALL HAVE MINIMUM OF 1/2" ENGAGEMENT OF THREADS IN BASE ANCHOR AND MAY HAVE EITHER A PAN HEAD, TRUSS HEAD, OR WAFER HEAD (SIDEWALK BOLT), U.O.N.
9. DESIGNATES ANCHOR CONDITIONS WHICH ARE NOT ACCEPTABLE USES.
10. * DESIGNATES ANCHORS WHICH ARE REMOVABLE BY REMOVING MACHINE SCREW, NUT OR WASHERED WINGNUT.
11. FOR BUILD-OUT MOUNT SECTION (D) ANCHOR SPACING SHALL NOT EXCEED 8-1/2" O.C.
12. FOR BUILD-OUT MOUNT SECTION (E) ANCHOR SPACING SHALL NOT EXCEED 6" O.C.

PRODUCT REVISED
as complying with the Florida Buiding Code
Acceptance No 02-0502.08
Expiration Date January 27, 2003
By
Miami Dade Product Control Division

KNEZEVICH & ASSOCIATES, INC.
CONSULTING ENGINEERS • PRODUCT TESTING
1260 N. UNIVERSITY DRIVE, SUITE 180 • FORT LAUDERDALE, FL 33322
TEL: (954) 382-2800 • FAX: (954) 382-2989 • FLORIDA COA #3205
WEBSITE: WWW.KNEZEVICH.COM • E-MAIL: KA@KNEZEVICH.COM

COPYRIGHT © 2002 KNEZEVICH & ASSOCIATES, INC

HTTOO LICENSED BY HI-TECH SHUTTER GROUP, INC.

PREMIER ACCORDION SHUTTER
450 West McNab Road Ft. Lauderdale, FL 33309 1-800-HURRICANE
ALL BROWARD HURRICANE PANEL, INC.
Wind-Up SHADES & SHUTTERS INC.

V.J. KNEZEVICH
PROFESSIONAL ENGINEER
FL License No: PE 0810983
MAY 1 0 2002

revisions			
no	date	by	description
2	10/10/96		COUNTY COMMENTS
3	11/26/97	JWK	REVISE FASTENERS
4	01/16/98	JWK	FASTENER NOTES
5	06/30/98	JWK	SLAT 2/REV 2.4 DESC.
6	06/10/99	VJK	CENTER MATES/FASTENERS
7	04/02/02	VJK	FBC2001 GENERAL NOTES
8	05/10/02	MAS	GENERAL NOTES

HTSG I.D. # 051002961680

date 07/23/1996	
scale AS NOTED	drawn by MCR
design by VJK	checked by VJK
drawing no. 99-817	
sheet 6 of 6	