MIAMI-DADE

BUILDING CODE COMPLIANCE OFFICE (BCCO)
PRODUCT CONTROL DIVISION

MIAMI-DADE COUNTY, FLORIDA
METRO-DADE FLAGLER BUILDING
140 WEST FLAGLER STREET, SUITE 1603
MIAMI, FLORIDA 33130-1563
(305) 375-2901 FAX (305) 375-2908

NOTICE OF ACCEPTANCE (NOA)

ShutterPro Hurricane Shutters, Inc.
4343 S. Ridgewood Avenue
Port Orange, FL 32127

SCOPE:
This NOA is being issued under the applicable rules and regulations governing the use of construction materials. The documentation submitted has been reviewed by Miami-Dade County Product Control Division and accepted by the Board of Rules and Appeals (BORA) to be used in Miami Dade County and other areas where allowed by the Authority Having Jurisdiction (AHJ).

This NOA shall not be valid after the expiration date stated below. The Miami-Dade County Product Control Division (In Miami Dade County) and/or the AHJ (in areas other than Miami Dade County) reserve the right to have this product or material tested for quality assurance purposes. If this product or material fails to perform in the accepted manner, the manufacturer will incur the expense of such testing and the AHJ may immediately revoke, modify, or suspend the use of such product or material within their jurisdiction. BORA reserves the right to revoke this acceptance, if it is determined by Miami-Dade County Product Control Division that this product or material fails to meet the requirements of the applicable building code.

This product is approved as described herein, and has been designed to comply with the High Velocity Hurricane Zone of the Florida Building Code.

DESCRIPTION: 60mm Roll-Up Shutter

APPROVAL DOCUMENT: Drawing No. 01-267, titled "ASSA/60mm Bertha Roll-Up", sheets 1 through 14, prepared, signed and sealed by Walter Tillit, P.E., dated 9/25/01, bearing the Miami-Dade County Product Control Revision stamp with the Notice of Acceptance number and expiration date by the Miami-Dade County Product Control Division.

MISSILE IMPACT RATING: Large and Small Missile Impact

LABELING: Each unit shall bear a permanent label with the manufacturer's name or logo, city, state and following statement: "Miami-Dade County Product Control Approved", unless otherwise noted herein.

RENEWAL of this NOA shall be considered after a renewal application has been filed and there has been no change in the applicable building code negatively affecting the performance of this product.

TERMINATION of this NOA will occur after the expiration date or if there has been a revision or change in the materials, use, and/or manufacture of the product or process. Misuse of this NOA as an endorsement of any product, for sales, advertising or any other purposes shall automatically terminate this NOA. Failure to comply with any section of this NOA shall be cause for termination and removal of NOA.

ADVERTISEMENT: The NOA number preceded by the words Miami-Dade County, Florida, and followed by the expiration date may be displayed in advertising literature. If any portion of the NOA is displayed, then it shall be done in its entirety.

INSPECTION: A copy of this entire NOA shall be provided to the user by the manufacturer or its distributors and shall be available for inspection at the job site at the request of the Building Official.
This NOA **revises NOA # 01-1002.02** and, consists of this page 1 as well as approval document mentioned above.
The submitted documentation was reviewed by **Raul Rodriguez.**

PRODUCT CONTROL ACCEPTED

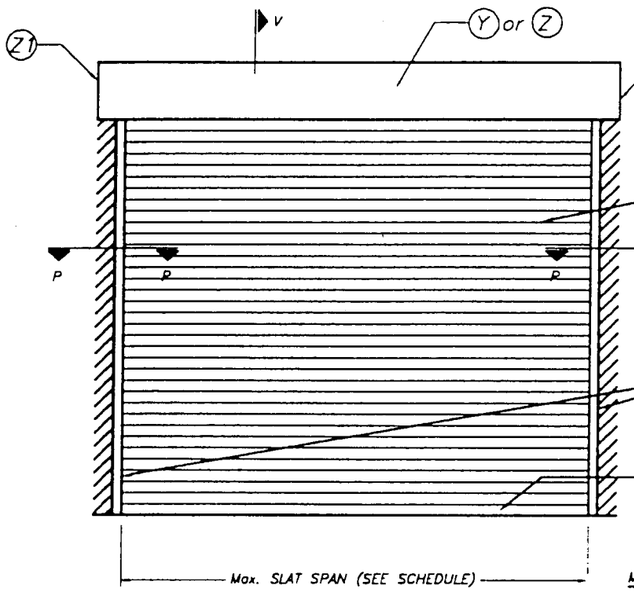

TYPICAL SINGLE UNIT ELEVATION (NO STORM BARS REQUIRED)

NOTE: SEE SHEET 2 & 3 OF 14 FOR COMPONENTS NOMENCLATURE.

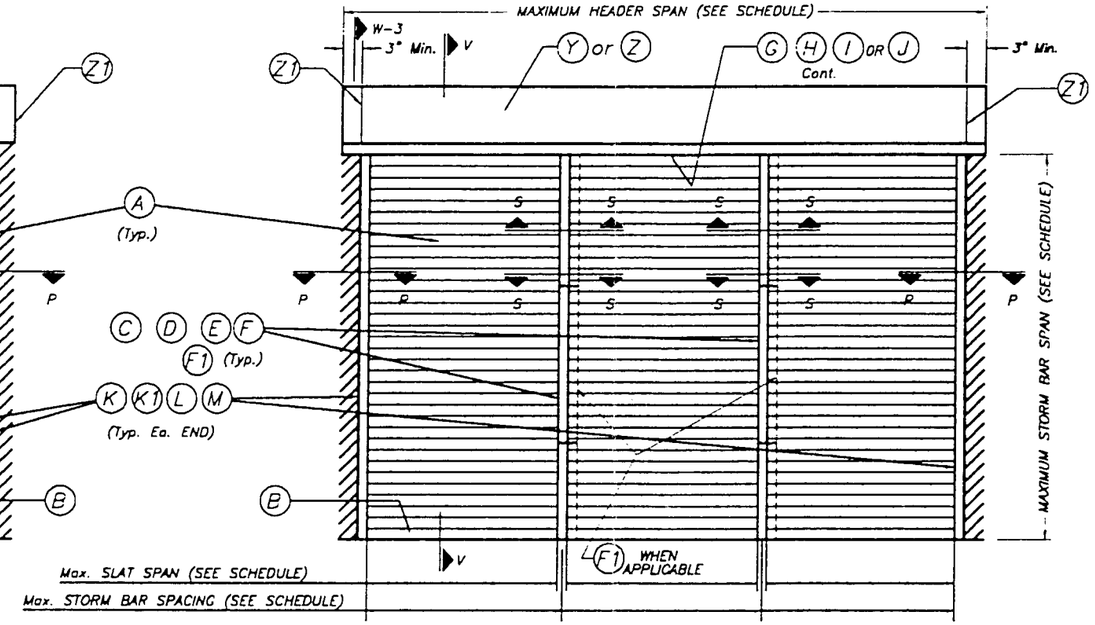

TYPICAL MULTIPLE UNIT ELEVATION (STORM BARS REQUIRED)

NOTE: SEE SHEET 2 & 3 OF 14 FOR COMPONENTS NOMENCLATURE.

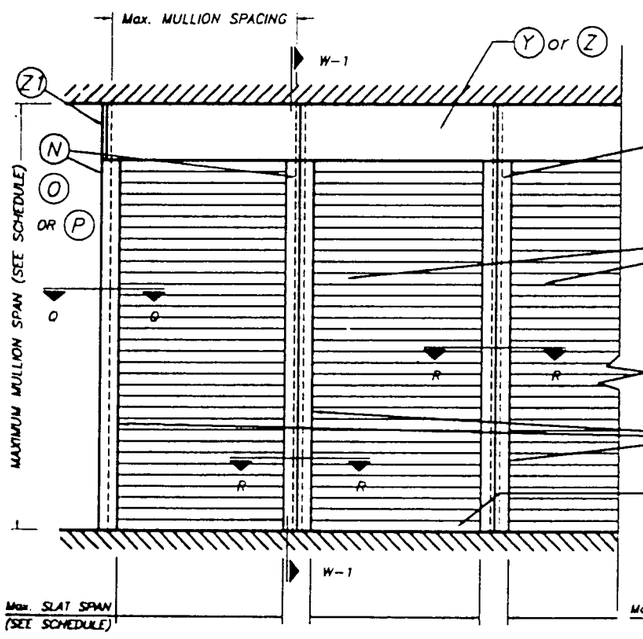

TYPICAL CONSECUTIVE SINGLE UNIT ELEVATION (NO STORM BARS REQUIRED)

NOTE: SEE SHEET 2 & 3 OF 14 FOR COMPONENTS NOMENCLATURE.

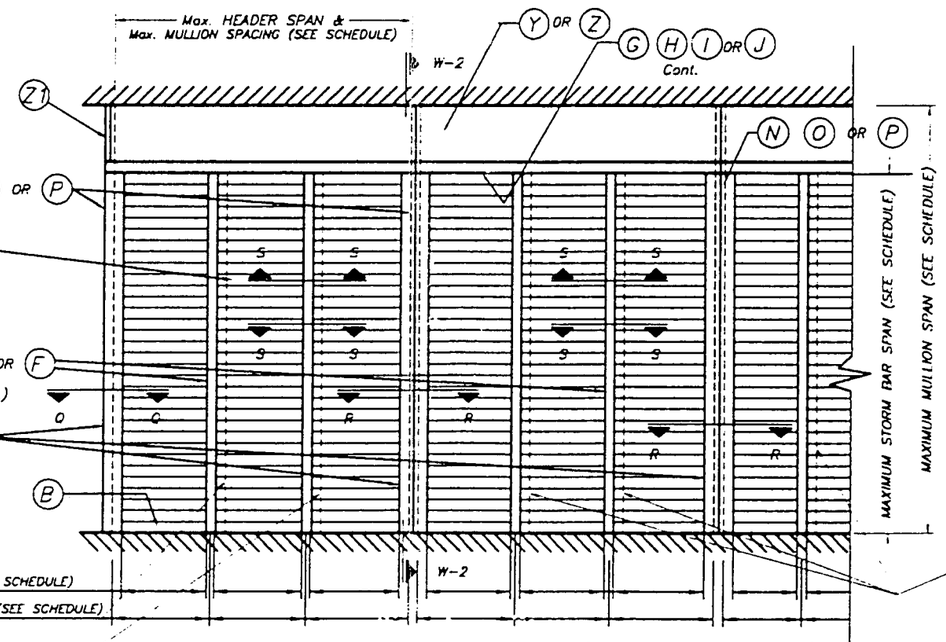

TYPICAL CONSECUTIVE MULTIPLE UNIT ELEVATION (STORM BARS REQUIRED)

NOTE: SEE SHEET 2 & 3 OF 14 FOR COMPONENTS NOMENCLATURE.

F1 WHEN APPLICABLE

NOTE:
SEE SECTIONS ON
SHEETS 4 THRU 7.

GENERAL NOTES:

1. ROLL-UP SHUTTER HAS BEEN DESIGNED IN ACCORDANCE WITH THE 1994 MIAMI-DADE COUNTY EDITION OF THE SOUTH FLORIDA BUILDING CODE.
   DESIGN WIND LOADS SHALL BE AS PER SECTION 8 OF ASCE 7-88, WITH 110 m.p.h. BASIC WIND SPEED.
   ROLL-UP SHUTTER'S ADEQUACY FOR IMPACT AND FATIGUE RESISTANCE HAS BEEN VERIFIED IN ACCORDANCE WITH SECTIONS 2315 & 2314 RESPECTIVELY OF THE ABOVE MENTIONED CODE, AS PER FENESTRATION TESTING LAB. REPORTS # 2751 & 2780.
2. ALL ALUMINUM EXTRUSIONS SHALL BE 6063-T6 ALLOY (UNLESS OTHERWISE NOTED).
3. ALL SCREWS TO BE STAINLESS STEEL 304 OR 316 SERIES W/50 ksi YIELD POINT AND 90 ksi TENSILE STRENGTH.
4. BOLTS TO BE 2024-T4 ALUMINUM ALLOY, GALVANIZED OR STAINLESS STEEL WITH 36 ksi MINIMUM YIELD POINT.
5. STORM BARS AT FLOOR OR CEILING MOUNTING INSTALLATIONS MAY BE REMOVABLE AT NON HURRICANE CONDITIONS. HOWEVER, EACH STORM BAR SHALL BEAR A PERMANENT LABEL IN A VISIBLE PLACE WITH A WARNING NOTE INSTRUCTING THE TENANT OR OWNER THAT STORM BARS MUST BE INSTALLED WITH CORRESPONDING HARDWARE DURING PERIODS OF HURRICANE WARNING AND THAT ROLL UP SHUTTERS WILL NOT OFFER HURRICANE PROTECTION UNLESS ALL STORM BARS ARE INSTALLED AS DIRECTED.
6. REMOVABLE STORM BARS SHALL BE STORED IN A CONSPICUOUS PLACE WITH EASY AND IMMEDIATE ACCESS SO THAT THEY CAN BE REACHED AND INSTALLED ANY TIME (HURRICANE CONDITIONS OR NOT) SLATS ARE ROLLED DOWN. THE EFFECT OF THE SLATS ROLLED DOWN WITHOUT STORM BARS IS: THOSE SLATS WILL SLIP OUT OF TRACK DUE TO THE DEFLECTION CAUSED BY WIND FORCES.
7. ANCHORS TO WALL FOR SIDE RAILS & BOX CONNECTION SHALL BE AS FOLLOWS: (UNLESS OTHERWISE NOTED)
   (A) TO EXISTING POURED CONCRETE:
   -1/4" ø TAPCON ANCHORS AS MANUFACTURED BY I.T.W./BUILDEX OR ELCO TEXTRON.
   NOTES:
   A.1) MINIMUM EMBEDMENT OF TAPCON ANCHORS INTO POURED CONCRETE SHALL BE 1 3/4". NO EMBEDMENT INTO STUCCO SHALL BE CONSIDERED AS PART OF THE REQUIRED EMBEDMENT.
   A.2) IN CASE THAT PRECAST STONE, PRECAST CONCRETE PANELS, OR PAVERS BE FOUND ON THE EXISTING WALL OR FLOOR, ANCHORS SHALL BE LONG ENOUGH TO REACH THE MAIN STRUCTURE BEHIND SUCH PANELS.
   (B) TO EXISTING CONCRETE BLOCK WALL:
   -1/4" ø TAPCON ANCHORS, AS MANUFACTURED BY I.T.W./BUILDEX OR ELCO TEXTRON.
   NOTES:
   B.1) MINIMUM EMBEDMENT OF TAPCON ANCHORS, INTO THE CONCRETE BLOCK UNIT SHALL BE 1 1/4".
   B.2) IN CASE THAT PRECAST STONE OR PRECAST CONCRETE PANELS BE FOUND ON THE EXISTING WALL, ANCHORS SHALL BE LONG ENOUGH TO REACH THE MAIN STRUCTURE BEHIND SUCH PANELS.
   (C) ANCHORS SHALL BE INSTALLED FOLLOWING ALL OF THE RECOMMENDATIONS AND SPECIFICATIONS OF THE ANCHOR'S MANUFACTURER.
   (D) ANCHORS REQUIRED FOR STORM BARS, HEADERS & MULLION CONNECTIONS SHALL BE AS SPECIFIED ON APPLICABLE SECTIONS SHOWN ON SHEETS 5, 5A, 6, & 7 OF 14 RESPECTIVELY.
   POWER BOLTS & CALK-IN ANCHORS TO BE AS MANUFACTURED BY POWERS RAWL FASTENING, INC.
   MINIMUM EDGE DISTANCE AND SPACING FOR ABOVE MENTIONED ANCHORS SHALL BE AS INDICATED BELOW OR AT ABOVE MENTIONED SHEETS, WHICHEVER IS LARGER (MORE CRITICAL).

ANCHOR	SPACING	EDGE DISTANCE
3/8"ø POWER BOLT	3 3/4"	4 1/2"
1/4"ø CALK-IN	2 1/2"	3"
1/4"ø TAPCON	3"	2 1/2"

8. IT SHALL BE THE RESPONSIBILITY OF THE CONTRACTOR TO VERIFY THE SOUNDNESS OF THE STRUCTURE WHERE SHUTTER IS TO BE ATTACHED TO INSURE PROPER ANCHORAGE.
9. SHUTTER MANUFACTURER'S STAMP SHALL BE PLACED ON THE EXPOSED SURFACE OF THE SIDE RAIL APPROXIMATELY 4" ABOVE THE BOTTOM OF SUCH RAIL.
   STAMP SHALL READ AS FOLLOWS:
   SHUTTERPRO HURRICANE SHUTTERS INC.
   PORT ORANGE, FL. 32119
   MIAMI-DADE COUNTY PRODUCT CONTROL APPROVED.
10. ROLL-UP MECHANISM NOT PART OF THIS APPROVAL.

APPROVED AS COMPLYING WITH THE
SOUTH FLORIDA BUILDING CODE
DATE DEC 06 2001
BY
PRODUCT CONTROL DIVISION
BUILDING CODE COMPLIANCE OFFICE
ACCEPTANCE NO. 01-1002.02

PRODUCT REVISED
as complying with the Florida
Building Code
Acceptance No. 01-0502.11
Expiration Date DECEMBER 31, 2006
By Miami Dade Product Control Division

MIAMI-DADE COUNTY

9/25/01

TILTECO INC.
TILLIT TESTING & ENGINEERING COMPANY
8585 N.W. 38th. St., Ste. 317 - VIRGINIA GARDENS, FL 33166
Phone : (305)871-1530 . Fax : (305)871-1531
EB 0006719
WALTER A. TILLIT Jr., P. E.
FLORIDA Lic. # 44167

ASSA/60mm BERTHA ROLL-UP

SHUTTERPRO HURRICANE SHUTTERS INC.
(ASSA # 253)
4491 S. RIDGEWOOD AVE.
PORT ORANGE, FL. 32119

REV. No	DESCRIPTION	DATE	REV. No	DESCRIPTION	DATE
1	-	-	3		
2	-	-	4		

AS SHOWN
SCALE

9/24/01
DATE

01-267
DRAWING No

SHEET 1 OF 14

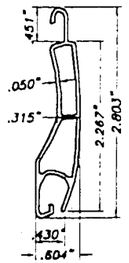

(A) TYPE 1 SLAT:
EXTRUDED ALUMINUM SLAT
6063-T6 ALUMINUM ALLOY
SCALE: 1/2" = 1"

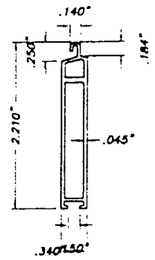

(B) TYPE 2 SLAT:
EXTRUDED ALUMINUM BOTTOM SLAT
6063-T6 ALUMINUM ALLOY
SCALE: 1/2" = 1"

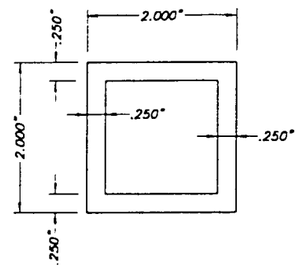

(C) TYPE 1 STORM BAR:
2" EXTRUDED STORM BAR
6063-T6 ALUMINUM ALLOY
SCALE: 1/2" = 1"

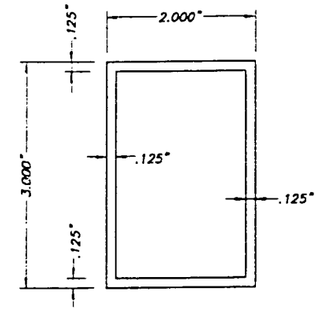

(D) TYPE 2 STORM BAR:
3" EXTRUDED STORM BAR
6063-T6 ALUMINUM ALLOY
SCALE: 1/2" = 1"

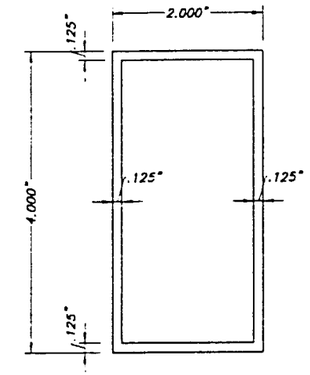

(E) TYPE 3 STORM BAR:
4" EXTRUDED STORM BAR
6063-T6 ALUMINUM ALLOY
SCALE: 1/2" = 1"

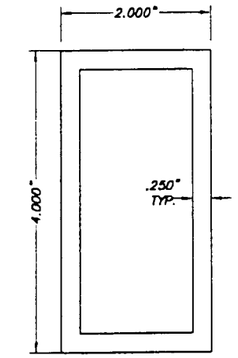

(F) TYPE 4 STORM BAR:
4" HEAVY EXTRUDED STORM BAR
6063-T6 ALUMINUM ALLOY
SCALE: 1/2" = 1"

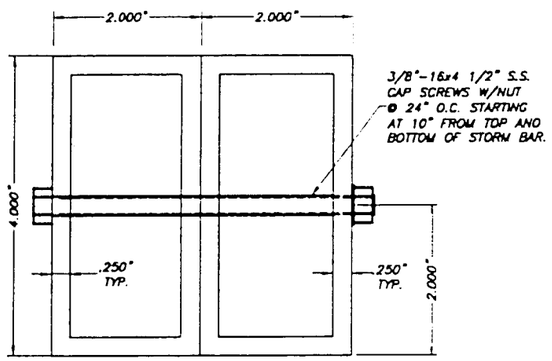

(F1) TYPE 5 STORM BAR:
4" HEAVY EXTRUDED STORM BAR
6063-T6 ALUMINUM ALLOY
SCALE: 1/2" = 1"

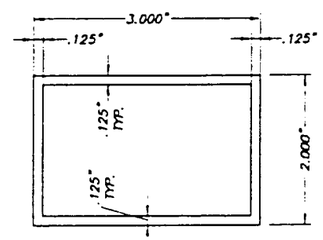

(G) HEADER TYPE 1:
6063-T6 ALUMINUM ALLOY
SCALE: 1/2" = 1"

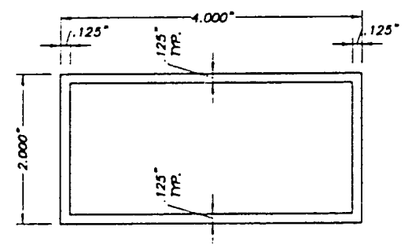

(H) HEADER TYPE 2:
6063-T6 ALUMINUM ALLOY
SCALE: 1/2" = 1"

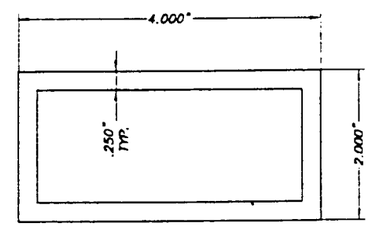

(I) HEADER TYPE 3:
6063-T6 ALUMINUM ALLOY
SCALE: 1/2" = 1"

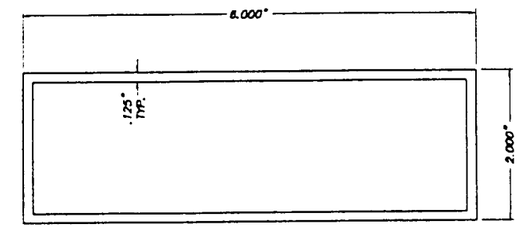

(J) HEADER TYPE 4:
6063-T6 ALUMINUM ALLOY
SCALE: 1/2" = 1"

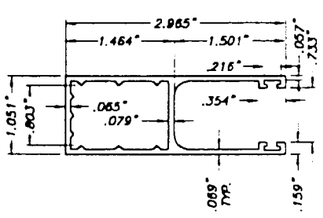

(K) TYPE 1 SIDE RAIL:
6063-T6 Alum. ALLOY
SCALE: 1/2" = 1"

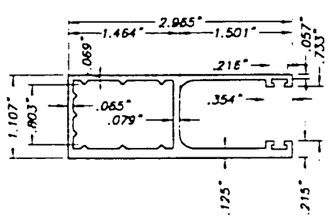

(K1) TYPE 2 SIDE RAILS:
6063-T6 Alum. ALLOY
SCALE: 1/2" = 1"

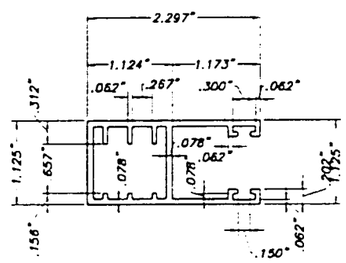

(L) TYPE 3 SIDE RAIL:
6063-T6 Alum. ALLOY
SCALE: 1/2" = 1"

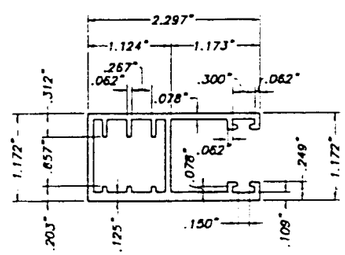

(M) TYPE 4 SIDE RAIL:
6063-T6 Alum. ALLOY
SCALE: 1/2" = 1"

PRODUCT REVISED
as complying with the Florida
Building Code
Acceptance No 02-0502.11
Expiration Date December 6, 2006
By
Miami Dade Product Control
Division

APPROVED AS COMPLYING WITH THE
SOUTH FLORIDA BUILDING CODE
DATE DEC 06 2001
BY
PRODUCT CONTROL DIVISION
BUILDING CODE COMPLIANCE OFFICE
ACCEPTANCE NO. 01-1002.02
MIAMI-DADE COUNTY

9/25/01

TILTECO INC.
TILLIT TESTING & ENGINEERING COMPANY
8585 N.W. 30th. St., Ste. 217 - VIRGINIA GARDENS, FL 33166
Phone : (305)871-1530 . Fax : (305)871-1531
EB 0006719
WALTER A. TILLIT Jr., P. E.
FLORIDA Lic. # 44167

ASSA/60mm BERTHA ROLL-UP

SHUTTERPRO HURRICANE SHUTTERS INC.
(ASSA # 253)
4491 S. RIDGEWOOD AVE.
PORT ORANGE, FL. 32119

REV. No	DESCRIPTION	DATE	REV. No	DESCRIPTION	DATE
1	-	-	3		
2	-	-	4		

AS SHOWN
SCALE
9/24/01
DATE
01-267
DRAWING No
SHEET 2 OF 14

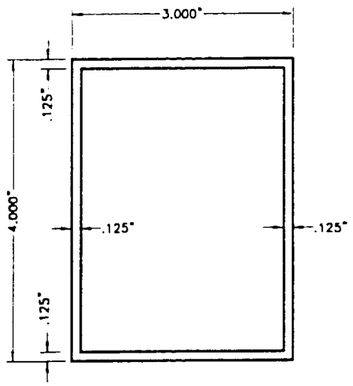

(N) TYPE 1 MULLION:
4" EXTRUDED MULLION
6063-T6 ALUMINUM ALLOY
SCALE: 1/2" = 1"

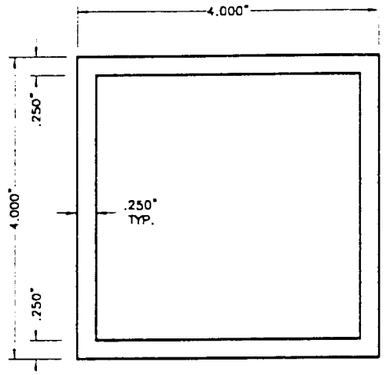

(O) TYPE 2 MULLION:
4" EXTRUDED MULLION
6063-T6 ALUMINUM ALLOY
SCALE: 1/2" = 1"

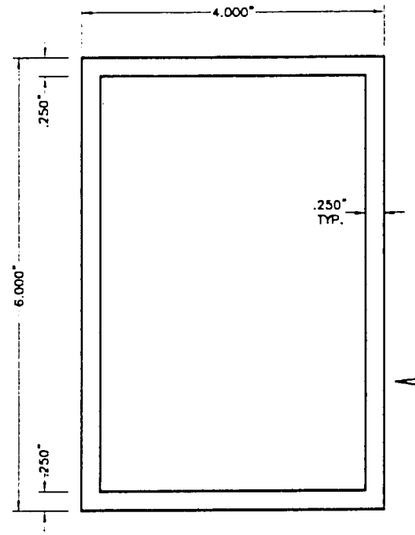

(P) TYPE 3 MULLION:
6" EXTRUDED MULLION
6063-T6 ALUMINUM ALLOY
SCALE: 1/2" = 1"

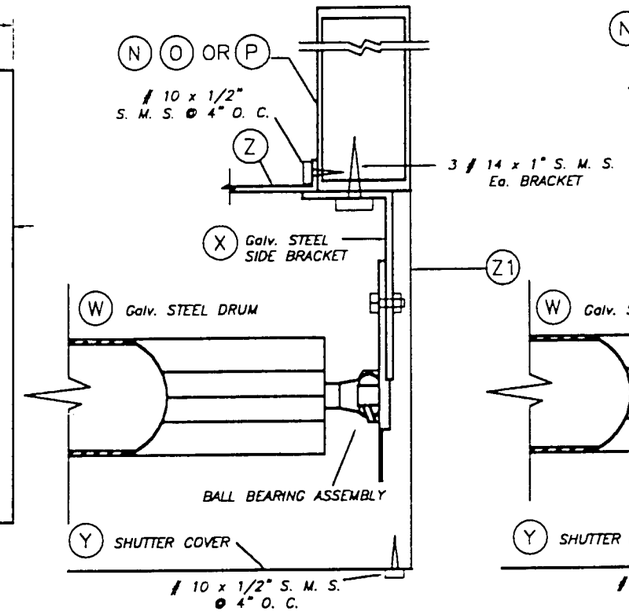

BRACKET DETAIL 1A

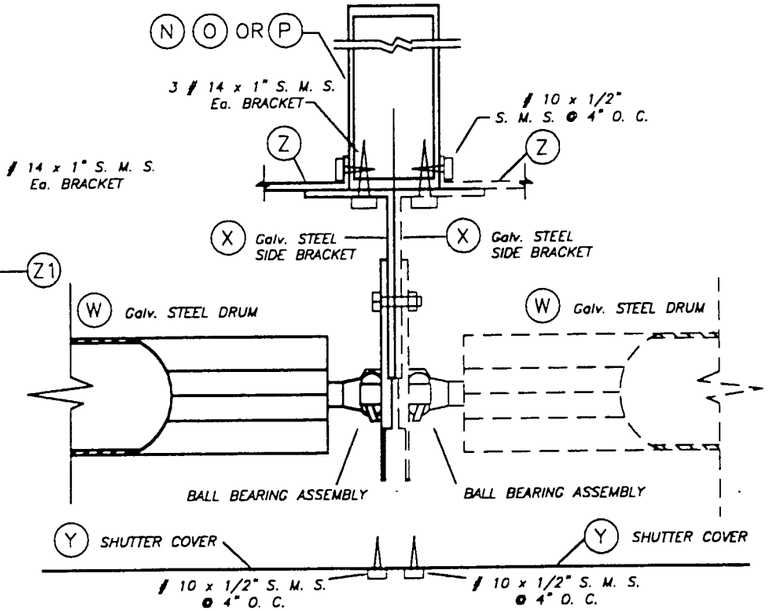

BRACKET DETAIL 2

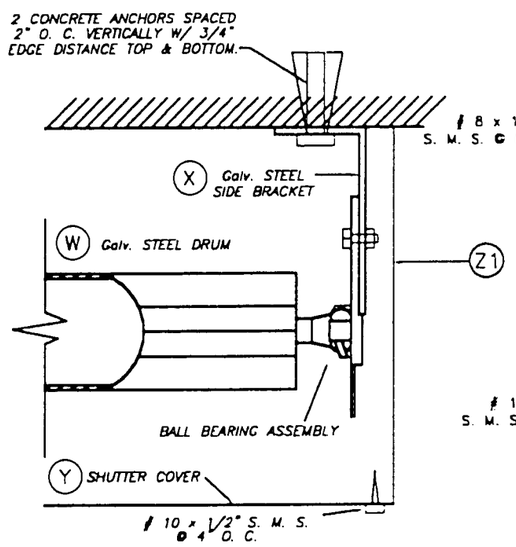

BRACKET DETAIL 1

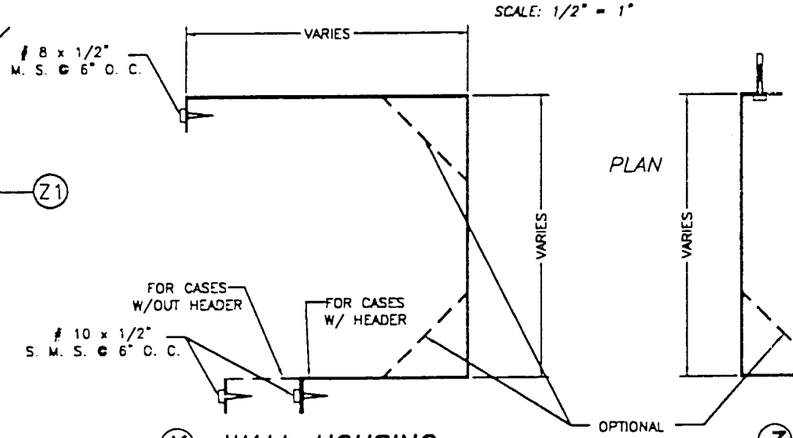

(Y) WALL HOUSING
SCALE: 3/16" = 1"
3105-H14 ALUMINUM ALLOY
THICKNESS: .032"

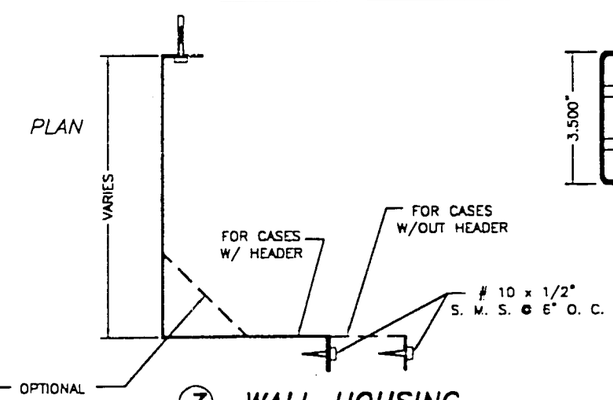

(Z) WALL HOUSING
SCALE: 3/16" = 1"
3105-H14 ALUMINUM ALLOY
THICKNESS: .032"

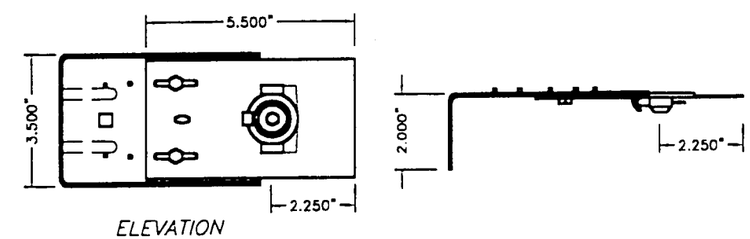

(X) SIDE BRACKET SCALE: 1/4" = 1"
1010 ELITE ROLLED STEEL F. E.
P. O. 1 Z 200 DESIGNATION
Ftu= 410 NW/MM2. % OF STRETCH
MINIMAL ON TEST. BAR OF 80 MM: 24 %
G-90 GALVANIZED COATING Thk.: .060"

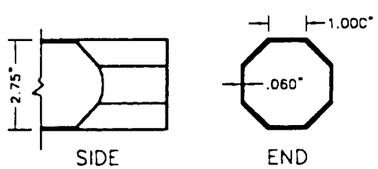

(W) DRUM SCALE: 1/4" = 1"
1010 ELITE ROLLED STEEL F. E.
P. O. 1 Z 200 DESIGNATION
Ftu= 410 NW/MM2. % OF STRETCH
MINIMAL ON TEST. BAR OF 80 MM. 24 %
G-90 GALVANIZED COATING Thk.: .060"

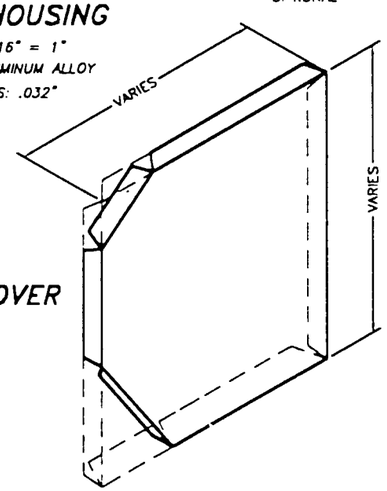

(Z1) SHUTTER SIDE COVER
SCALE: 3/16" = 1"
3105-H14 ALUMINUM ALLOY
THICKNESS: .032"

PRODUCT REVISED
as complying with the Florida Building Code
Acceptance No 02-0502.11
Expiration Date December 6, 2006
By
Miami Dade Product Control Division

APPROVED AS COMPLYING WITH THE SOUTH FLORIDA BUILDING CODE
DATE DEC 06 2001
BY
PRODUCT CONTROL DIVISION
BUILDING CODE COMPLIANCE OFFICE
ACCEPTANCE NO. 01-1002.02

MIAMI-DADE COUNTY

9/25/01

TILTECO INC.
TILLIT TESTING & ENGINEERING COMPANY
8385 N.W. 36th. St., Ste. 217 - VIRGINIA GARDENS, FL 33166
Phone : (305)871-1530 . Fax : (305)871-1531
EB 0006719
WALTER A. TILLIT Jr., P. E.
FLORIDA Lic. # 44167

ASSA/60mm BERTHA ROLL-UP

SHUTTERPRO HURRICANE SHUTTERS INC.
(ASSA # 253)
4491 S. RIDGEWOOD AVE.
PORT ORANGE, FL. 32119

REV. No	DESCRIPTION	DATE	REV. No	DESCRIPTION	DATE
1	-	-	3		
2	-	-	4		

AS SHOWN
SCALE
9/24/01
DATE
01-267
DRAWING No
SHEET 3 OF 14

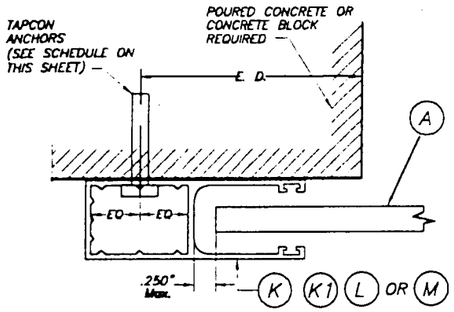

SECTION P – P (1) : WALL MOUNT

SCALE: 1/2" = 1"

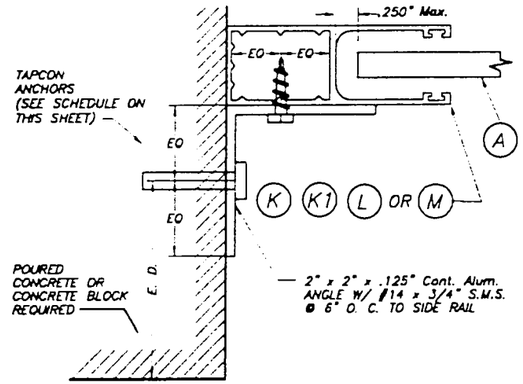

SECTION P – P (2) : SIDE WALL MOUNT

SCALE: 1/2" = 1"

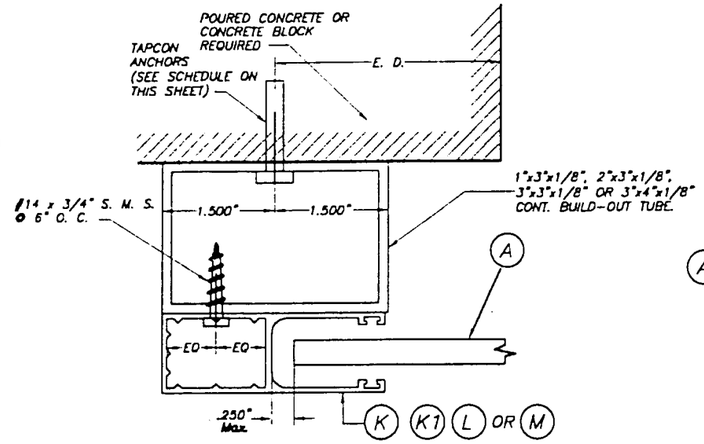

SECTION P – P (3) : BUILD-OUT MOUNT

SCALE: 1/2" = 1"

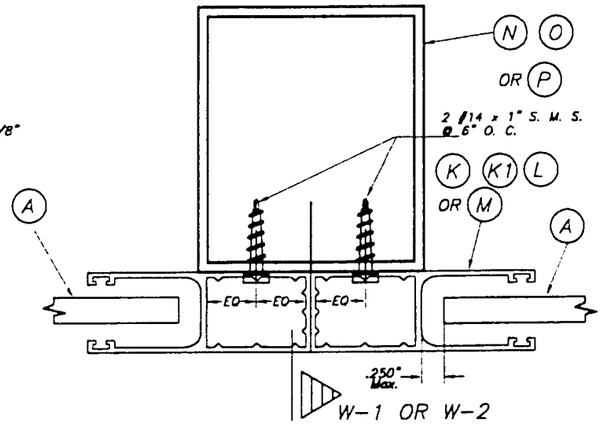

SECTION R – R : MULLION MOUNT (FACE MOUNT)

SCALE: 1/2" = 1"

SIDE RAIL ANCHOR SCHEDULE

MAXIMUM DESIGN PRESSURE RATING "W" (p. s. f.) AND CORRESPONDING MAXIMUM ANCHOR SPACING(In) * FOR SIDE RAILS (K), (K1), (L) & (M) CONNECTION TO C. B. S.

(USE NEGATIVE PRESSURE VALUES AS PER ASCE 7-88)

MAXIMUM DESIGN LOAD "W" (p.s.f.)	SIDE RAIL (K)			SIDE RAIL (K1)			SIDE RAIL (L)			SIDE RAIL (M)		
	WALL MOUNT	INSIDE MOUNT	BUILD-OUT MOUNT	WALL MOUNT	INSIDE MOUNT	BUILD-OUT MOUNT	WALL MOUNT	INSIDE MOUNT	BUILD-OUT MOUNT	WALL MOUNT	INSIDE MOUNT	BUILD-OUT MOUNT
80 OR LESS	6"	4"	6"	6"	4	6"	6"	5"	6"	6"	5"	6"
	6"	6"	6"	6"	6"	6"	6"	6"	6"	6"	6"	6"
>80 TO 150	3 1/2"	2 1/2"	5"	3 1/2"	2 1/2"	5 1/2"	5"	3 1/2"	6"	5"	3 1/2"	6"
	6"	6"	6"	6"	6"	6"	6"	6"	6"	6"	6"	6"
>150 TO 225	2 1/2"	–	4"	2 1/2"	–	4"	3"	2 1/2"	5"	3"	2 1/2"	5"
	6"	5 1/2"	6"	6"	6"	6"	6"	6"	6"	6"	6"	6"

MASONRY
POURED CONCRETE

SUBSTRATE LEGEND

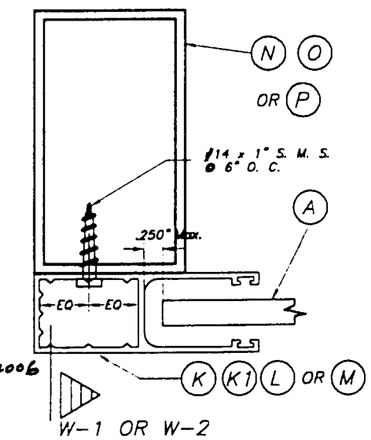

SECTION Q – Q : MULLION MOUNT (FACE MOUNT)

SCALE: 1/2" = 1"

PRODUCT REVISED
as complying with the Florida Building Code
Acceptance No. 02-0508.11
Expiration Date ~~December 6~~ 2006
By
Miami Dade Product Control Division

* MAXIMUM ANCHOR SPACING (In.) AT SIDE RAILS VERSUS EDGE DISTANCE = E. D.

MAXIMUM SIDE RAILS ANCHOR SPACINGS SHOWN ON THIS SHEET ARE VALID FOR 3 1/2" EDGE DISTANCE.
FOR E. D. LESS THAN 3 1/2", REDUCE ANCHOR SPACING BY MULTIPLYING SPACINGS SHOWN ON ABOVE INDICATED SCHEDULE BY THE FOLLOWING FACTORS.

ACTUAL E. D.= EDGE DISTANCE	FACTOR
3"	.86
2 1/2"	.71
2"	.50

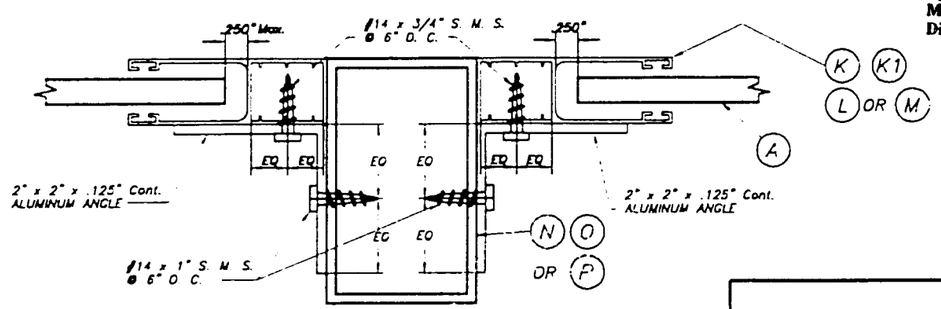

SECTION R – R : MULLION MOUNT (INSIDE MOUNT)

SCALE: 1/2" = 1"

APPROVED AS COMPLYING WITH THE SOUTH FLORIDA BUILDING CODE
DATE DEC 06 2001
BY
PRODUCT CONTROL DIVISION
BUILDING CODE COMPLIANCE OFFICE
ACCEPTANCE NO. 01-1002.02

MIAMI-DADE COUNTY

9/25/01

TILTECO INC.
TILLIT TESTING & ENGINEERING COMPANY
8585 N.W. 38th. St., Ste. 217 – VIRGINIA GARDENS, FL 33166
Phone : (305)871-1530 . Fax : (305)871-1531
EB 0006719
WALTER A. TILLIT Jr., P. E.
FLORIDA Lic. # 44167

ASSA/60mm BERTHA ROLL-UP

SHUTTERPRO HURRICANE SHUTTERS INC.
(ASSA # 253)
4491 S. RIDGEWOOD AVE.
PORT ORANGE, FL. 32119

REV. No	DESCRIPTION	DATE	REV. No	DESCRIPTION	DATE
1	–	–	3		
2	–	–	4		

AS SHOWN SCALE

9/24/01 DATE

01-267 DRAWING No

SHEET 4 OF 14

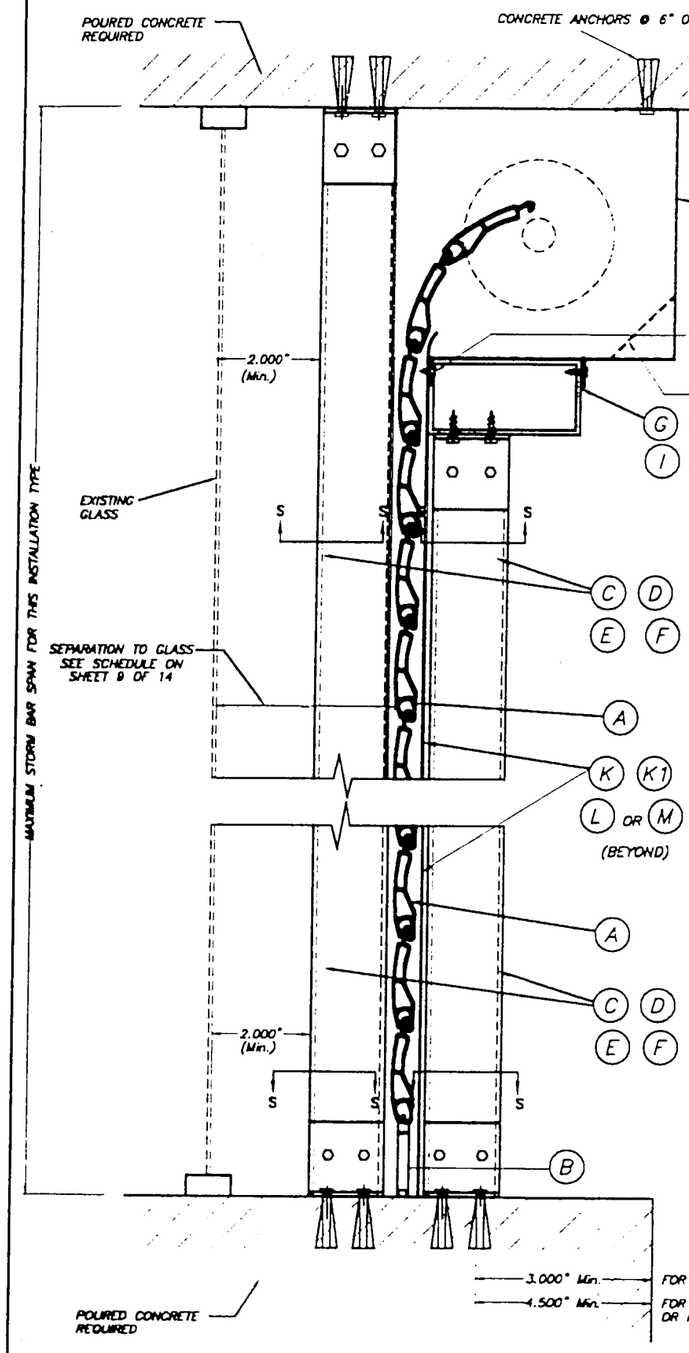

CEILING & FLOOR MOUNTING INSTALLATION W/ FIXED OR REMOVABLE STORM BARS W/CONCRETE ANCHORS

(SEE SECTION "S" FOR ANCHOR TYPE REQUIREMENT)

SCALE : 1/4" = 1"

SINGLE SPAN SECTIONS AND DETAILS ARE SIMILAR TO ABOVE SHOWN WITHOUT STORM BAR & HEADERS.

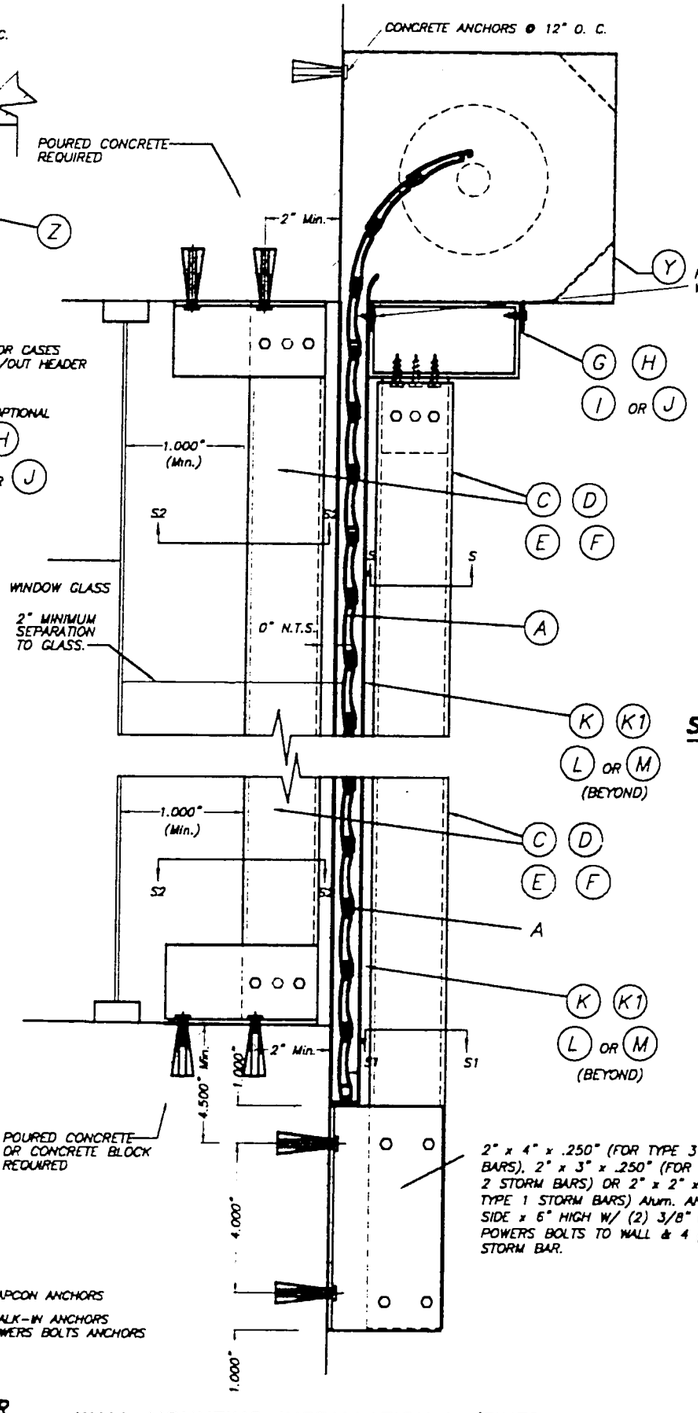

WALL MOUNTING INSTALLATION W/FIXED STORM BARS W/CONCRETE ANCHORS

SCALE : 1/4" = 1"

SECTIONS V – V

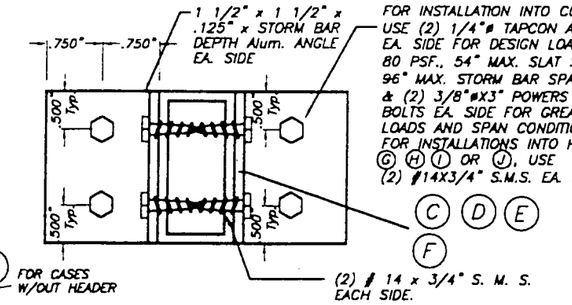

SECTION S – S (FOR FIXED STORM BAR)

SCALE : 1/2" = 1"

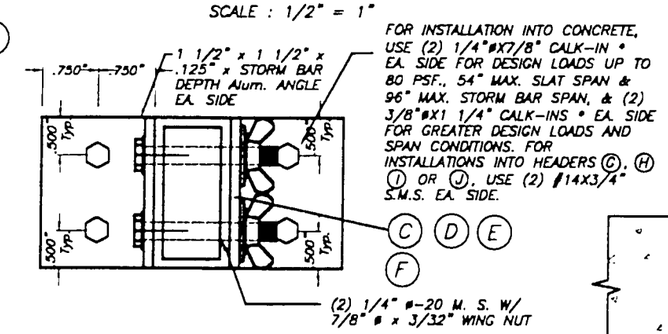

SECTION S – S (FOR REMOVABLE STORM BAR)

SCALE : 1/2" = 1"

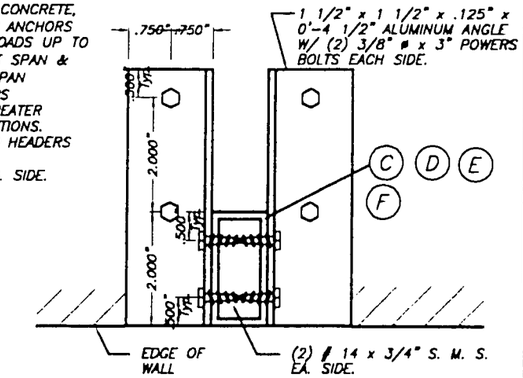

SECTION S2 – S2

SCALE : 1/4" = 1"

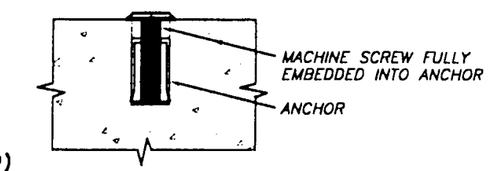

DETAIL A

SCALE : 1/2" = 1"

* 1/4" ø-20 OR 3/8" ø-16 MACHINE SCREWS USED JOINTLY W/ 1/4" ø x 7/8" OR 3/8" ø x 1 1/4" CALK-IN ANCHORS RESPECTIVELY SHALL BE LEFT TOGETHER W/ ANCHORS AT THE TIME STORM BARS ARE REMOVED. (SEE DET. A).

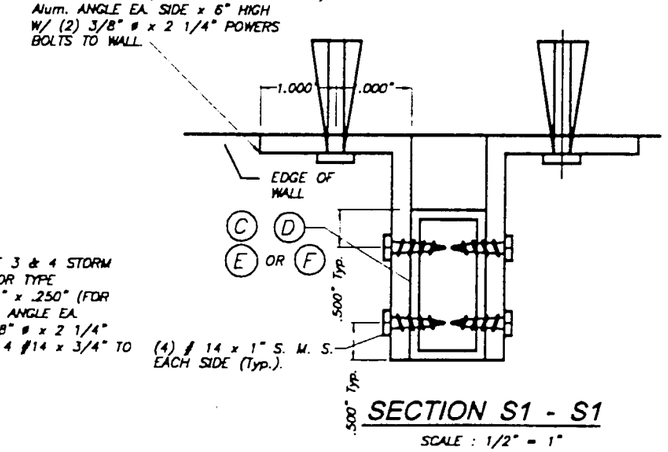

SECTION S1 - S1

SCALE : 1/2" = 1"

PRODUCT REVISED
as complying with the Florida Building Code
Acceptance No 02-0502.11
Expiration Date December 6, 2006
By
Miami Dade Product Control Division

APPROVED AS COMPLYING WITH THE SOUTH FLORIDA BUILDING CODE
DATE DEC 06 2001
BY
PRODUCT CONTROL DIVISION
BUILDING CODE COMPLIANCE OFFICE
ACCEPTANCE NO. 01-1002.02

MIAMI–DADE COUNTY

9/25/01

TILTECO INC.
TILLIT TESTING & ENGINEERING COMPANY
8585 N.W. 38th St., Ste. 217 – VIRGINIA GARDENS, FL 33166
Phone : (305)871-1530 . Fax : (305)871-1531
EB 0006719
WALTER A. TILLIT Jr., P. E.
FLORIDA Lic. # 44187

ASSA/60mm BERTHA ROLL-UP

SHUTTERPRO HURRICANE SHUTTERS INC.
(ASSA # 253)
4491 S. RIDGEWOOD AVE.
PORT ORANGE, FL. 32119

REV. No	DESCRIPTION	DATE	REV. No	DESCRIPTION	DATE
1	–	–	4		
2	–	–	4		

AS SHOWN SCALE
9/24/01 DATE
01-267 DRAWING No
SHEET 5 OF 14

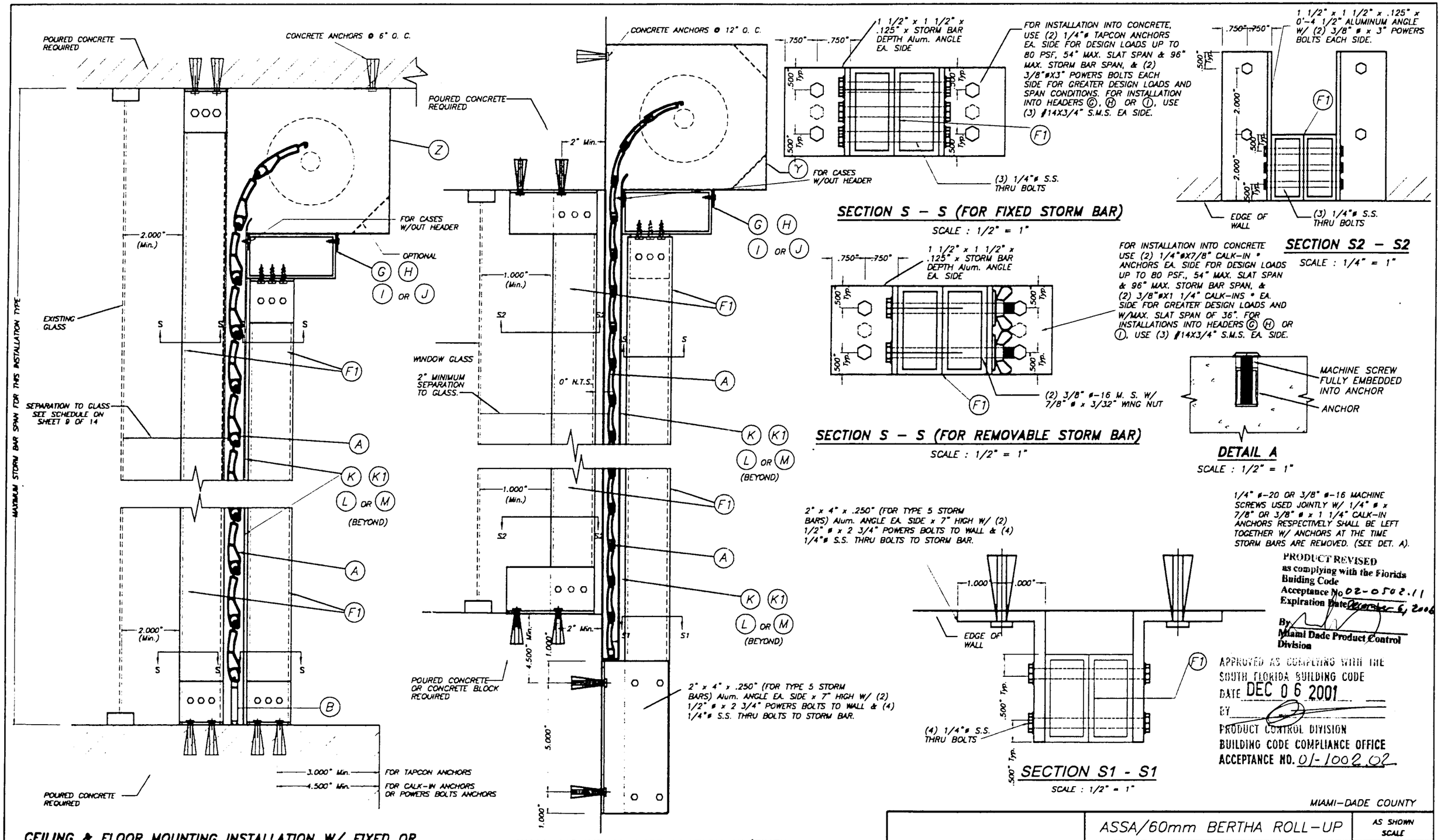

PRODUCT REVISED
as complying with the Florida Building Code
Acceptance No. 02-0502.11
Expiration Date December 6, 2006
By
Miami Dade Product Control Division

APPROVED AS COMPLYING WITH THE SOUTH FLORIDA BUILDING CODE
DATE DEC 06 2001
BY
PRODUCT CONTROL DIVISION
BUILDING CODE COMPLIANCE OFFICE
ACCEPTANCE NO. 01-1002.02

MIAMI-DADE COUNTY

TILTECO INC.
TILLIT TESTING & ENGINEERING COMPANY
8380 N.W. 36th St., Ste. 217 - VIRGINIA GARDENS, FL 33166
Phone : (305)871-1530 . Fax : (305)871-1531
EB 0006719
WALTER A. TILLIT Jr., P. E.
FLORIDA Lic. # 44167

9/25/01

ASSA/60mm BERTHA ROLL-UP			AS SHOWN SCALE
SHUTTERPRO HURRICANE SHUTTERS INC. (ASSA # 253) 4491 S. RIDGEWOOD AVE. PORT ORANGE, FL. 32119			9/24/01 DATE
			01-267 DRAWING No
REV. No	DESCRIPTION	DATE	SHEET 5A OF 14
1	-	-	
2	-	-	
3			
4			

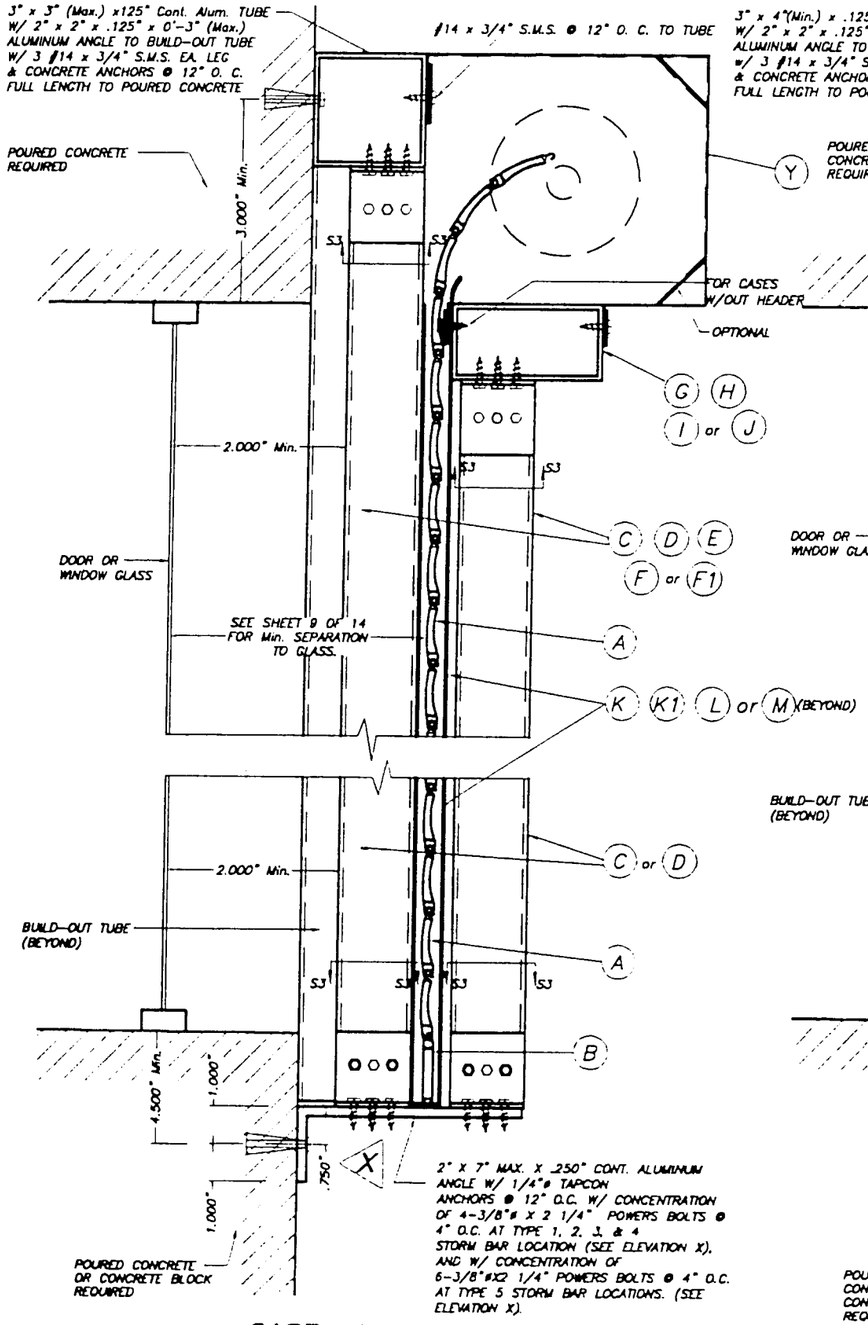

CASE I

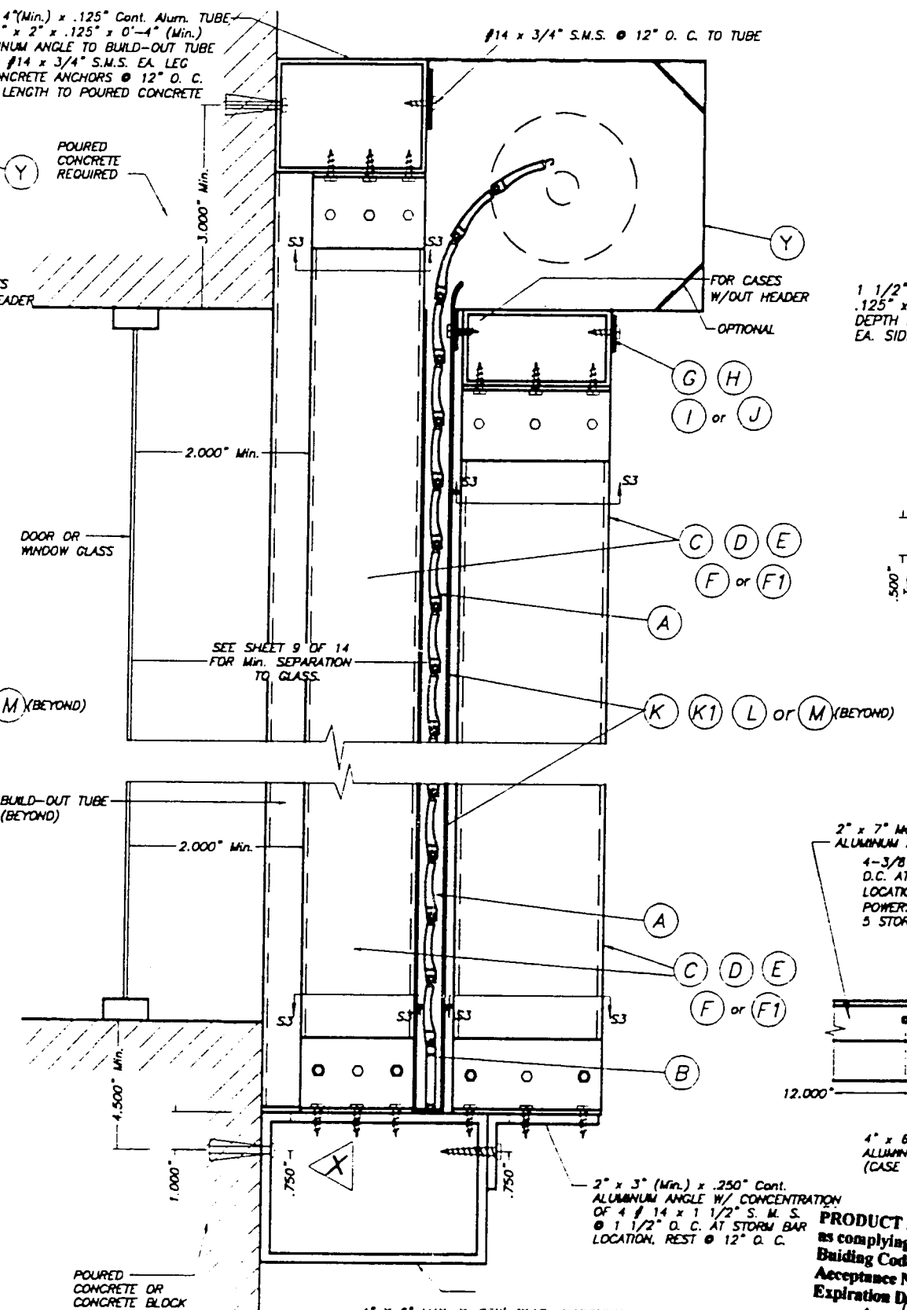

CASE II

FIXED STORM BAR CONNECTION AT BUILD-OUT INSTALLATIONS W/SHEET METAL SCREWS

SCALE : 1/4" = 1"

NOTE:
SINGLE SPAN SECTIONS AND DETAILS ARE SIMILAR TO ABOVE SHOWN WITHOUT STORM BAR & HEADERS.

SECTIONS V – V

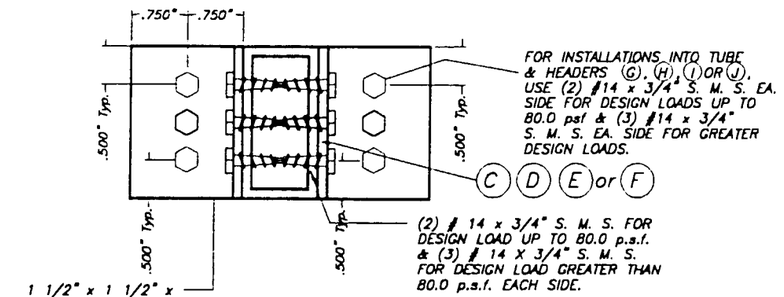

SECTION S3 – S3

SCALE : 1/2" = 1"

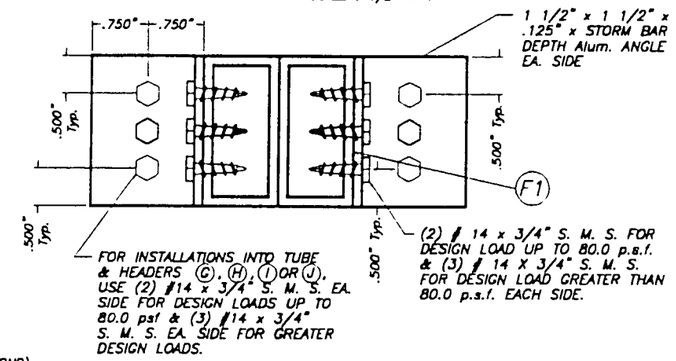

SECTION S3 – S3

SCALE : 1/2" = 1"

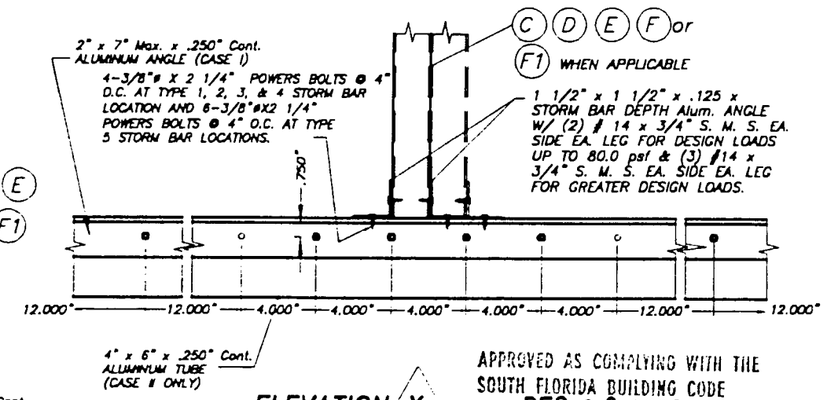

ELEVATION X

SCALE : 1/8" = 1"

PRODUCT REVISED
as complying with the Florida Building Code
Acceptance No 02-0562.11
Expiration Date December 6, 2006
By
Miami Dade Product Control Division

APPROVED AS COMPLYING WITH THE SOUTH FLORIDA BUILDING CODE
DATE DEC 06 2001
BY
PRODUCT CONTROL DIVISION
BUILDING CODE COMPLIANCE OFFICE
ACCEPTANCE NO. 01-1002.02

MIAMI-DADE COUNTY

TILTECO INC.
TILLIT TESTING & ENGINEERING COMPANY
8585 N.W. 36th St., Ste. 217 – VIRGINIA GARDENS, FL 33166
Phone : (305)871-1530 : Fax : (305)871-1531
EB 0006719
WALTER A. TILLIT Jr., P. E.
FLORIDA Lic. # 44167

9/25/01

ASSA/60mm BERTHA ROLL-UP	AS SHOWN SCALE
SHUTTERPRO HURRICANE SHUTTERS INC. (ASSA # 253) 4491 S. RIDGEWOOD AVE. PORT ORANGE, FL. 32119	9/24/01 DATE
	01-267 DRAWING No
	SHEET 6 OF 14

REV. No	DESCRIPTION	DATE	REV. No	DESCRIPTION	DATE
1	–	–	3		
2	–	–	4		

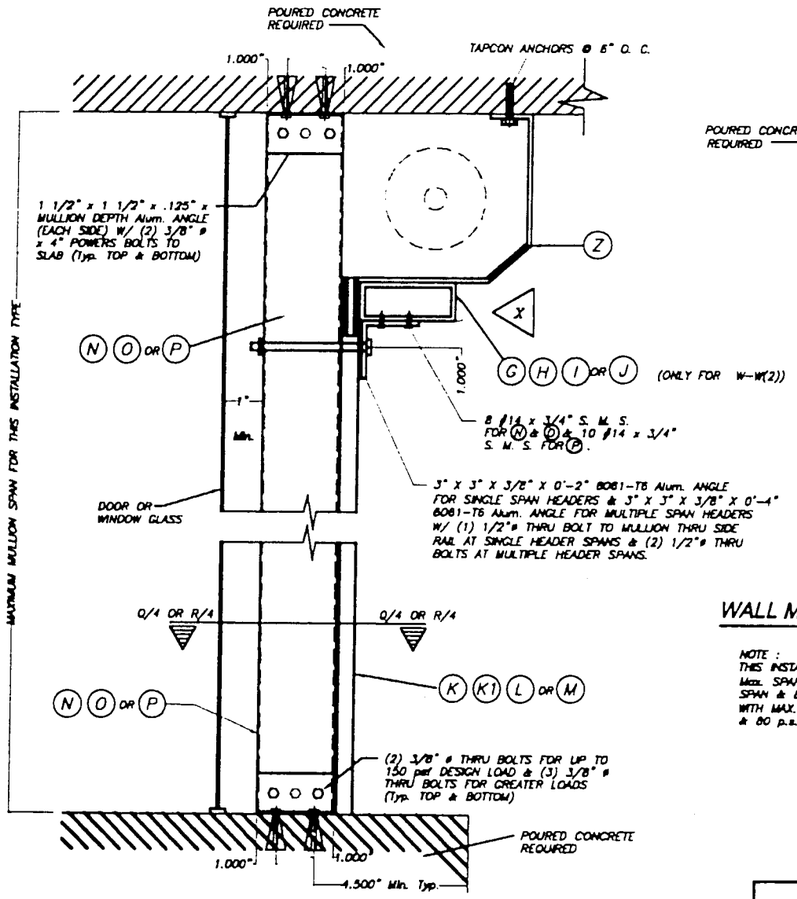

FLOOR/CEILING MOUNTING : SECTION W-W (1), W/O HEADER SECTION W-W (2), W/HEADER

SCALE : 1/8" = 1"

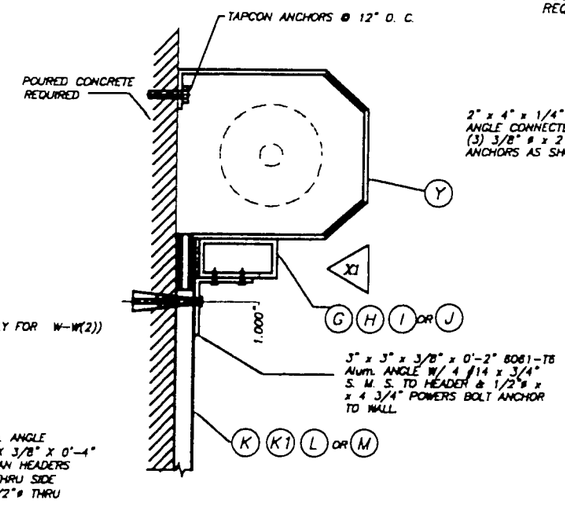

WALL MOUNTING : SECTION W-W (3)

SCALE : 1/8" = 1"

NOTE :
THIS INSTALLATION IS ONLY VALID FOR STORM BARS WITH Max. SPAN = 8'-0", HEADERS WITH 12'-0" Max. SINGLE SPAN & 80 p.s.f. MAXIMUM DESIGN LOAD. OR STORM BARS WITH MAX. SPAN = 8'-0", HEADERS WITH 15'-0" SINGLE & 80 p.s.f. MAXIMUM DESIGN LOAD.

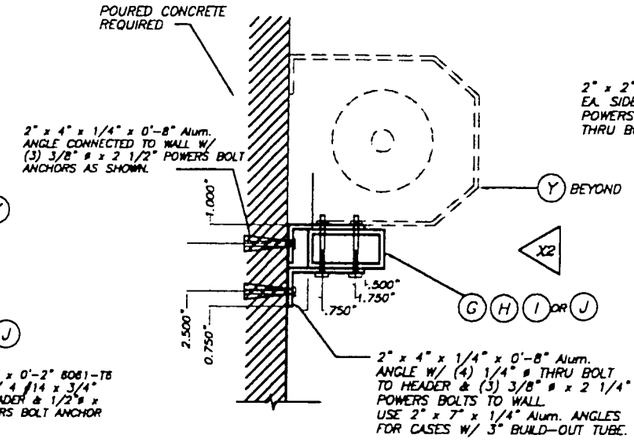

WALL MOUNTING : SECTION W-W(3)

SCALE : 1/8" = 1"

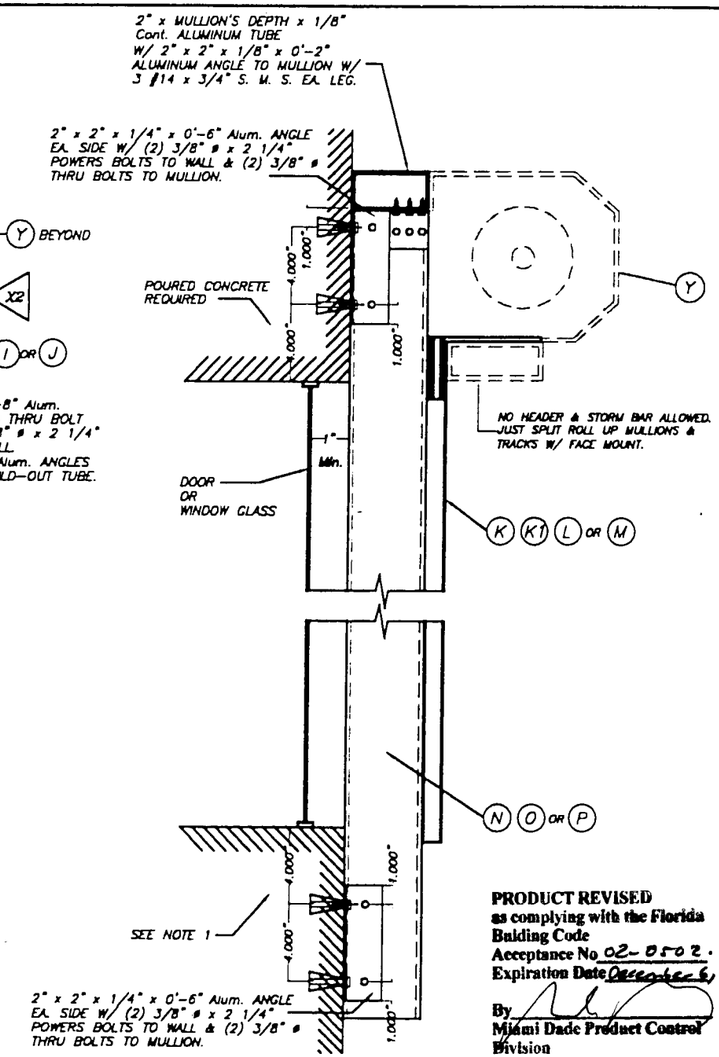

PRODUCT REVISED
as complying with the Florida Building Code
Acceptance No 02-0502.11
Expiration Date December 6, 2002
By
Miami Dade Product Control Division

WALL MOUNTING : MULLION CONNECTION AT TOP & BOTTOM : SECTION W-W (1)

SCALE : 1/8" = 1"

NOTE 1 :
EXISTING WALL MAY BE POURED CONCRETE OR CONCRETE BLOCK FOR DESIGN LOADS UP TO 150.0 psf AND SHALL BE POURED CONCRETE OR CONCRETE FILLED BLOCKS FOR GREATER LOADS.

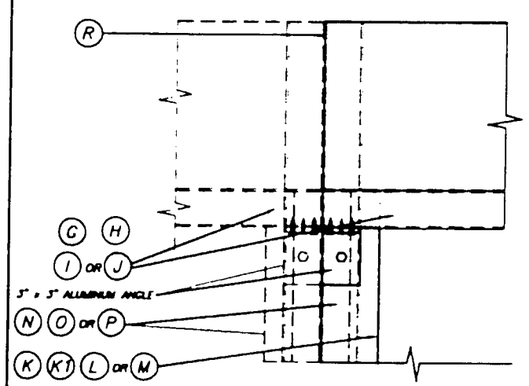

ELEVATION X

SCALE : 1/8" = 1"

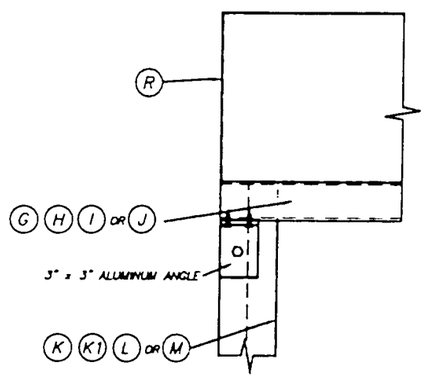

ELEVATION X1

SCALE : 1/8" = 1"

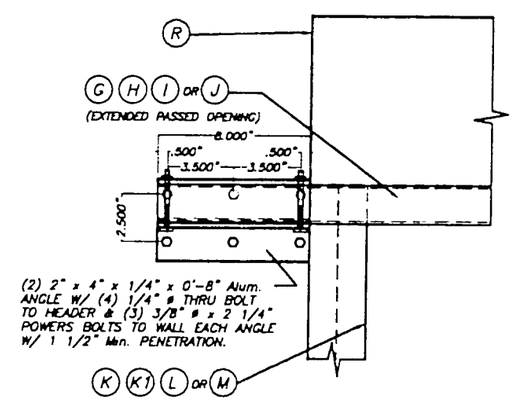

ELEVATION X2

SCALE : 1/8" = 1"

TYPICAL HEADER CONNECTION AT ENDS: SECTIONS W-W

9/25/01

APPROVED AS COMPLYING WITH THE SOUTH FLORIDA BUILDING CODE
DATE DEC 0 6 2001
BY
PRODUCT CONTROL DIVISION
BUILDING CODE COMPLIANCE OFFICE
ACCEPTANCE NO. 01-1002.02
MIAMI-DADE COUNTY

TILLECO INC.
TILLIT TESTING & ENGINEERING COMPANY
6395 N.W. 30th. St., Ste. 217 - VIRGINIA GARDENS, FL 33166
Phone : (305)871-1530 . Fax : (305)871-1531
EB 0006719
WALTER A. TILLIT Jr., P. E.
FLORIDA Lic. # 44167

ASSA/60mm BERTHA ROLL-UP

SHUTTERPRO HURRICANE SHUTTERS INC.
(ASSA # 253)
4491 S. RIDGEWOOD AVE.
PORT ORANGE, FL. 32119

REV. No	DESCRIPTION	DATE	REV. No	DESCRIPTION	DATE
1	-	-	3		
2	-	-	4		

AS SHOWN
SCALE
9/24/01
DATE
01-267
DRAWING No
SHEET 7 OF 14

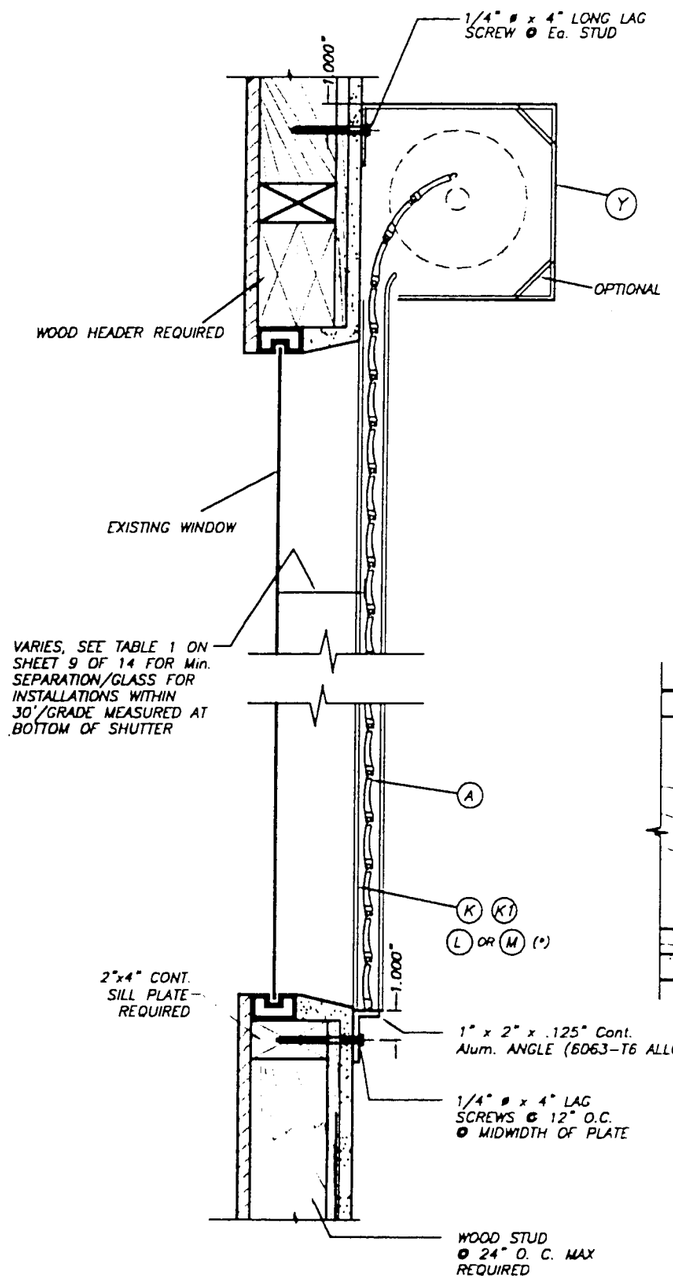

WALL MOUNTING INSTALLATION

SINGLE SPAN CONDITION

N. T. S.

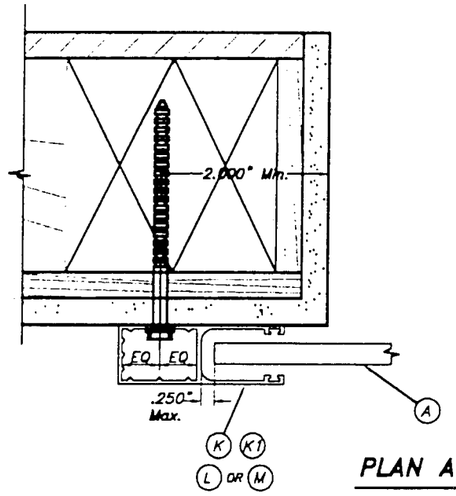

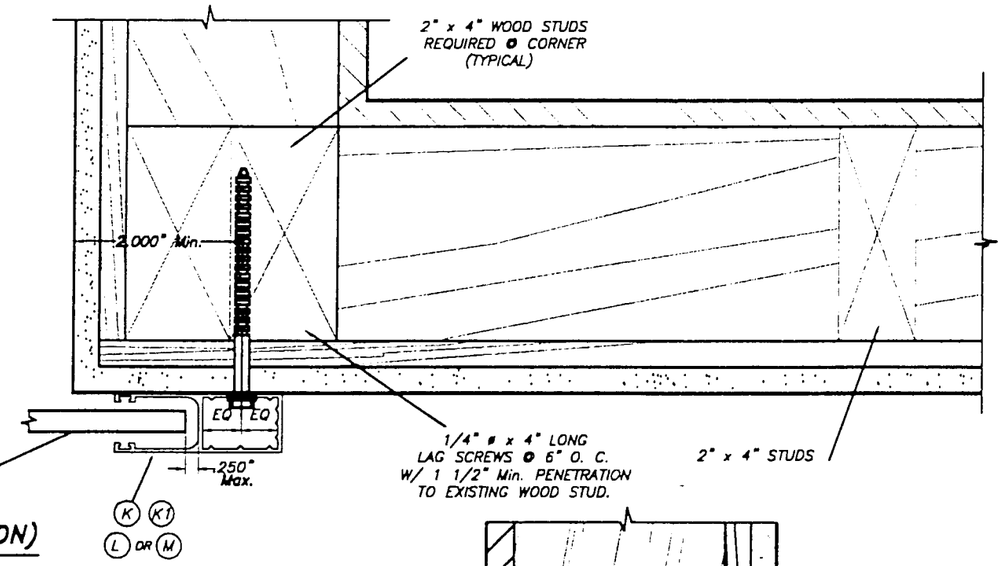

PLAN A (SECTION)

WALL MOUNT

SCALE : 3/8" = 1"

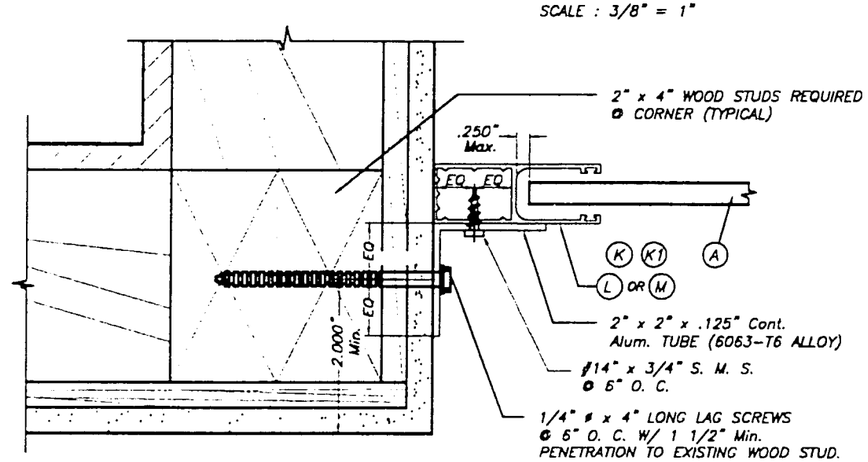

PLAN B (SECTION)

INSIDE MOUNT

SCALE : 3/8" = 1"

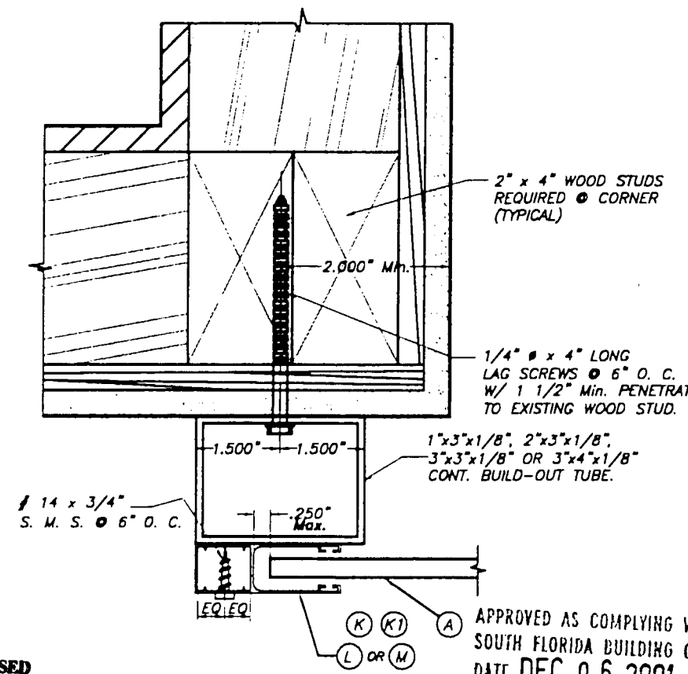

PLAN C (SECTION)

BUILD-OUT

SCALE : 3/8" = 1"

PRODUCT REVISED
as complying with the Florida Building Code
Acceptance No 02-0502.01
Expiration Date December 6, 2006
By Miami-Dade Product Control Division

APPROVED AS COMPLYING WITH THE SOUTH FLORIDA BUILDING CODE
DATE DEC 06 2001
BY
PRODUCT CONTROL DIVISION
BUILDING CODE COMPLIANCE OFFICE
ACCEPTANCE NO. 01-1002.02

MIAMI-DADE COUNTY

NOTES:

1. INSTALLATIONS ARE ONLY VALID FOR BUILDINGS WITH DESIGN LOADS UP TO 75.0 psf.
2. FOR NEW FRAME CONSTRUCTION: WOOD MEMBER TO BE SOUTHERN PINE No. 2 W/ SPECIFIC DENSITY OF 0.55 OR EQUAL.
3. MINIMUM PENETRATION OF LAG SCREWS INTO WOOD MEMBER TO BE 1 1/2".

9/25/01

TILTECO INC.
TILLIT TESTING & ENGINEERING COMPANY
8380 N.E. 38th. St. Ste. 217 - VIRGINIA GARDENS, FL 33166
Phone : (305)871-1530 . Fax : (305)871-1531
EB 0006719
WALTER A. TILLIT Jr., P. E.
FLORIDA Lic. # 44167

ASSA/60mm BERTHA ROLL-UP

SHUTTERPRO HURRICANE SHUTTERS INC.
(ASSA # 253)
4491 S. RIDGEWOOD AVE.
PORT ORANGE, FL 32119

REV. No	DESCRIPTION	DATE	REV. No	DESCRIPTION	DATE
1	-	-	3		
2	-	-	4		

AS SHOWN
SCALE

9/24/01
DATE

01-267
DRAWING No

SHEET 8 OF 14

SLAT PERFORMANCE CHART
MAXIMUM NEGATIVE DESIGN PRESSURE RATING "W" (p. s. f.) AND CORRESPONDING MAXIMUM SLAT SPAN "L" FOR TYPE 1 SLAT

(USE NEGATIVE PRESSURE VALUES AS PER ASCE 7-88)

SLAT TYPE / Max. DESIGN LOAD "W" (p.s.f.)	MAXIMUM SLAT SPAN	MINIMUM SEPARATION TO GLASS	
	SINGLE & MULTIPLE UNIT *	SINGLE & MULTIPLE UNIT **	SINGLE & MULTIPLE UNIT ***
40.0	6'-5"	4 3/8"	3 5/8"
45.0	6'-2"	4"	3 1/2"
50.0	5'-11"	4"	3 3/8"
55.0	5'-9"	4"	3 3/8"
60.0	5'-7"	4"	3 1/4"
65.0	5'-5"	4"	3 1/4"
70.0	5'-4'	4"	3 1/8"
75.0	5'-2"	4"	3 1/8"
80.0	5'-1"	4"	3"
85.0	5'-0"	4"	3"
90.0	4'-11"	4"	3"
95.0	4'-10"	4"	3"
100.0	4'-9"	4"	3"
105.0	4'-8"	4"	3"
110.0	4'-7"	4"	2 7/8"
115.0	4'-6"	2 7/8"	2 7/8"
120.0	4'-5"	2 7/8"	2 7/8"
125.0	4'-5"	2 7/8"	2 7/8"
130.0	4'-4"	2 3/4"	2 3/4"
135.0	4'-3"	2 3/4"	2 3/4"
140.0	4'-3"	2 3/4"	2 3/4"
145.0	4'-2"	2 3/4"	2 3/4"
150.0	4'-1"	2 3/4"	2 3/4"
155.0	4'-1"	2 3/4"	2 3/4"
160.0	4'-0"	2 5/8"	2 5/8"
165.0	4'-0"	2 5/8"	2 5/8"
170.0	3'-11"	2 5/8"	2 5/8"
175.0	3'-11"	2 5/8"	2 5/8"
180.0	3'-11"	2 5/8"	2 5/8"
185.0	3'-10"	2 5/8"	2 5/8"
190.0	3'-10"	2 5/8"	2 5/8"
195.0	3'-9"	2 1/2"	2 1/2"
200.0	3'-9"	2 1/2"	2 1/2"
205.0	3'-8"	2 1/2"	2 1/2"
210.0	3'-8"	2 1/2"	2 1/2"
215.0	3'-7"	2 1/2"	2 1/2"
220.0	3'-7"	2 1/2"	2 1/2"
225.0	3'-6"	2 1/2"	2 1/2"

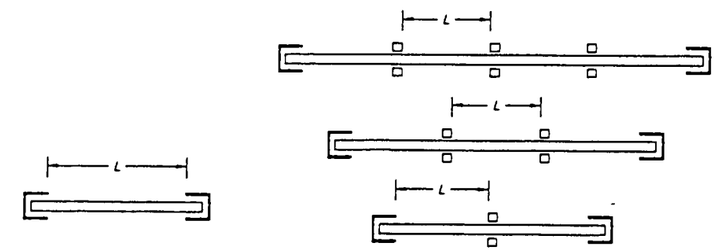

SINGLE SPAN

MULTIPLE SPAN

SPAN LAYOUT

* SPANS VALID FOR EVERY INSTALLATION LOCATED AT ANY ELEVATION OF BUILDING MEASURED AT BOTTOM OF SHUTTER. MINIMUM SEPARATION TO GLASS FOR SINGLE AND MULTIPLE UNITS SHALL BE MEASURED FROM BACK OF SLAT TO GLASS.

** MINIMUM SEPARATION TO GLASS FOR SHUTTERS INSTALLED WITHIN THE FIRST 30'-0" ELEVATION OF BUILDING AND MAXIMUM SPAN. SEE TABLE 1 FOR Min. SEPARATION TO GLASS FOR SPANS LESS THAN THE Max. ALLOWED.

*** MINIMUM SEPARATION TO GLASS FOR SHUTTERS INSTALLED ABOVE 30'-0" ELEVATION OF BUILDING, MEASURED AT BOTTOM OF SHUTTER.

TABLE 1:

SLAT SPAN (ft.)	MINIMUM SEPARATION TO GLASS
48" OR LESS	2 5/8"
> 48" TO 54"	2 7/8"
> 54" TO 74"	4"
> 74" TO 77"	4 3/8"

PRODUCT REVISED
as complying with the Florida Buiding Code
Acceptance No 02-0502.11
Expiration Date December 6, 2006
By
Miami Dade Product Control Division

APPROVED AS COMPLYING WITH THE SOUTH FLORIDA BUILDING CODE
DATE DEC 06 2001
BY
PRODUCT CONTROL DIVISION
BUILDING CODE COMPLIANCE OFFICE
ACCEPTANCE NO. 01-1002.02

MIAMI-DADE COUNTY

TILTECO INC.
TILLIT TESTING & ENGINEERING COMPANY
8385 N.W. 36th St., Ste. 217 - WESTON GARDENS, FL 33166
Phone : (305)871-1530 . Fax : (305)871-1531
EB 0006719
WALTER A. TILLIT Jr., P. E.
FLORIDA Lic. # 44167

ASSA/60mm BERTHA ROLL-UP

SHUTTERPRO HURRICANE SHUTTERS INC.
(ASSA # 253)
4491 S. RIDGEWOOD AVE.
PORT ORANGE, FL. 32119

REV. No	DESCRIPTION	DATE	REV. No	DESCRIPTION	DATE
1	-	-	3		
2	-	-	4		

AS SHOWN SCALE

9/24/01 DATE

01-267 DRAWING No

STORM BAR LOADING CHART

MAXIMUM DESIGN PRESSURE RATING "W" (p. s. f.) AND CORRESPONDING MAXIMUM SPAN "L" FOR A GIVEN TYPE OF STORM BAR AND STORM BAR SPACING.

(USE NEGATIVE PRESSURE VALUES AS PER ASCE 7-88)

MAX. SPAN FOR STORM BARS W/REGULAR CONCRETE ANCHORS

MAXIMUM DESIGN LOAD "W" (p.s.f.)	TYPE 1 STORM BAR 2" x 2" x .250"					TYPE 2 STORM BAR 2" x 3" x .125"					TYPE 3 STORM BAR 2" x 4" x .125"				
	STORM BAR SPACING *					STORM BAR SPACING *					STORM BAR SPACING *				
	≤ 3'-0"	3' TO 4'	4' TO 5'	5' TO 6'	6' TO 6.5'	≤ 3'-0"	3' TO 4'	4' TO 5'	5' TO 6'	6' TO 6.5'	≤ 3'-0"	3' TO 4'	4' TO 5'	5' TO 6'	6' TO 6.5'
40		7'-1"	6'-9"	6'-5"	6'-3"	8'-0"	8'-0"	7'-7"	7'-3"	7'-1"	10'-0"	9'-6"	9'-0"	8'-7"	8'-7"
45		6'-11"	6'-6"	6'-3"	6'-1"	8'-0"	7'-9"	7'-4"	6'-11"	6'-8"	10'-0"	9'-3"	8'-9"	8'-4"	8'-2"
50		6'-9"	6'-4"	6'-1"	5'-11"	8'-0"	7'-7"	7'-2"	6'-7"	6'-4"	9'-8"	9'-0"	8'-6"	8'-1"	7'-9"
55		6'-7"	6'-2"	5'-11"	5'-10"	7'-11"	7'-5"	6'-11"	6'-3"	–	9'-6"	8'-10"	8'-4"	7'-8"	–
60		6'-5"	6'-1"	5'-10"	5'-7"	7'-9"	7'-3"	6'-7"	6'-2"	–	9'-3"	8'-7"	8'-1"	7'-5"	–
65		6'-3"	5'-11"	5'-7"	5'-4"	7'-7"	7'-1"	6'-4"	5'-9"	–	9'-1"	8'-5"	7'-9"	7'-1"	–
70		6'-2"	5'-10"	5'-5"	5'-2"	7'-6"	6'-10"	6'-1"	5'-7"	–	8'-11"	8'-3"	7'-6"	6'-10"	–
75		6'-1"	5'-8"	5'-2"	5'-0"	7'-4"	6'-7"	5'-11"	5'-5"	–	8'-9"	8'-1"	7'-3"	6'-7"	–
80		6'-0"	5'-6"	5'-0"	4'-10"	7'-3"	6'-5'	5'-9"	5'-3"	–	8'-7"	7'-10"	7'-0"	6'-5"	–
85		5'-11"	5'-4"	4'-11"	4'-8"	7'-1"	6'-2"	5'-6"	5'-1"	–	8'-6"	7'-7"	6'-9"	6'-2"	–
90		5'-10"	5'-2"	4'-9"	4'-7"	6'-11"	6'-0"	5'-5"	4'-11"	–	8'-4"	7'-5"	6'-7"	6'-0"	–
95		5'-8"	5'-1"	4'-7"	4'-5"	6'-9"	5'-10"	5'-3"	4'-9"	–	8'-3"	7'-2"	6'-5"	5'-10"	–
100		5'-6"	4'-11"	4'-6"	4'-4"	6'-7"	5'-9"	5'-1"	4'-8"	–	8'-1"	7'-0"	6'-3"	5'-9"	–
105	6'-0"	5'-5"	4'-10"	4'-5"	4'-3"	6'-5"	5'-7"	5'-0"	4'-7"	–	7'-11"	6'-10"	6'-2"	5'-7"	–
110	5'-11"	5'-3"	4'-8"	4'-3"	4'-1"	6'-3"	5'-5"	4'-10"	4'-5"	–	7'-8"	6'-8"	6'-0"	5'-5"	–
115	5'-10"	5'-2"	4'-7"	4'-2"	4'-0"	6'-2"	5'-4"	4'-9"	4'-4"	–	7'-6"	6'-6"	5'-10"	5'-4"	–
120	5'-10"	5'-0"	4'-6"	4'-1"	3'-11"	6'-0"	5'-3"	4'-8"	4'-3"	–	7'-5"	6'-5"	5'-9"	5'-3"	–
125	5'-8"	4'-11"	4'-5"	4'-0"	3'-10"	5'-11"	5'-1"	4'-7"	4'-2"	–	7'-3"	6'-3"	5'-7"	5'-1"	–
130	5'-7"	4'-10"	4'-4"	3'-11"	3'-10"	5'-9"	5'-0"	4'-6"	4'-1"	–	7'-1"	6'-2"	5'-6"	5'-0"	–
135	5'-6"	4'-9"	4'-3"	3'-10"	3'-9"	5'-8"	4'-11"	4'-5"	4'-0"	–	6'-11"	6'-0"	5'-5"	4'-11"	–
140	5'-5"	4'-8"	4'-2"	3'-10"	3'-8"	5'-7"	4'-10"	4'-4"	3'-11"	–	6'-10"	5'-11"	5'-3"	4'-10"	–
145	5'-3"	4'-7"	4'-1"	3'-9"	3'-7"	5'-6"	4'-9"	4'-3"	3'-10"	–	6'-9"	5'-10"	5'-2"	4'-9"	–
150	5'-2"	4'-6"	4'-0"	3'-8"	3'-6"	5'-5"	4'-8"	4'-2"	3'-10"	–	6'-7"	5'-9"	5'-1"	4'-8"	–
155	5'-1"	4'-5"	4'-0"	3'-7"	3'-6"	5'-4"	4'-7"	4'-1"	3'-9"	–	6'-6"	5'-7"	5'-0"	4'-7"	–
160	5'-0"	4'-4"	3'-11"	3'-7"	3'-5"	5'-3"	4'-6"	4'-0"	3'-8"	–	6'-5"	5'-6"	4'-11"	4'-6"	–
165	4'-11"	4'-3"	3'-10"	3'-6"	3'-4"	5'-2"	4'-5"	4'-0"	3'-8"	–	6'-3"	5'-5"	4'-10'	4'-5"	–
170	4'-11"	4'-3"	3'-9"	3'-5"	3'-4"	5'-1"	4'-5"	3'-11"	3'-7"	–	6'-2"	5'-4"	4'-10'	4'-5"	–
175	4'-10"	4'-2"	3'-9"	3'-5"	3'-3"	5'-0"	4'-4"	3'-10"	3'-6"	–	6'-1"	5'-3"	4'-9"	4'-4"	–
180	4'-9"	4'-1"	3'-8"	3'-4"	3'-3"	4'-11"	4'-3"	3'-10"	3'-6"	–	6'-0"	5'-3"	4'-8"	4'-3"	–
185	4'-8"	4'-1"	3'-7"	3'-4"	3'-2"	4'-10"	4'-2"	3'-9"	3'-5"	–	5'-11"	5'-2"	4'-7"	4'-2"	–
190	4'-7"	4'-0"	3'-7"	3'-3"	3'-2"	4'-9"	4'-2"	3'-9"	3'-5"	–	5'-10"	5'-1"	4'-6"	4'-2"	–
195	4'-7"	3'-11"	3'-6"	3'-3"	3'-1"	4'-9"	4'-1"	3'-8"	3'-4"	–	5'-9"	5'-0"	4'-6"	4'-1"	–
200	4'-6"	3'-11"	3'-6"	3'-2"	3'-1"	4'-8"	4'-0"	3'-7"	3'-4"	–	5'-9"	4'-11"	4'-5"	4'-0"	–
205	4'-5"	3'-10"	3'-5"	3'-2"	3'-0"	4'-7"	4'-0"	3'-7"	3'-3"	–	5'-8"	4'-11"	4'-4"	4'-0"	–
210	4'-5"	3'-10"	3'-5"	3'-1"	3'-0"	4'-7"	3'-11"	3'-6"	3'-3"	–	5'-7"	4'-10'	4'-4"	3'-11"	–
215	4'-4"	3'-9"	3'-4"	3'-1"	2'-11"	4'-6"	3'-11"	3'-6"	3'-2"	–	5'-6"	4'-9"	4'-3"	3'-11"	–
220	4'-3"	3'-9"	3'-4"	3'-0"	2'-11"	4'-5"	3'-10"	3'-5"	3'-2"	–	5'-5"	4'-9"	4'-3"	3'-10"	–
225	4'-3"	3'-8"	3'-3"	3'-0"	2'-11"	4'-5"	3'-10"	3'-5"	3'-1"	–	5'-3"	4'-8"	4'-2"	3'-10"	–

* STORM BAR SPACING SHALL BE SUCH THAT MAXIMUM SLAT SPAN SHALL NOT BE EXCEEDED.

9/25/01

PRODUCT REVISED
as complying with the Florida Buiding Code
Acceptance No. 02-0502.11
Expiration Date December 6, 2006
By
Miami Dade Product Control Division

APPROVED AS COMPLYING WITH THE SOUTH FLORIDA BUILDING CODE
DATE DEC 06 2001
BY
PRODUCT CONTROL DIVISION
BUILDING CODE COMPLIANCE OFFICE
ACCEPTANCE NO. 01-1002.02

MIAMI-DADE COUNTY

TILTECO INC.
TILLIT TESTING & ENGINEERING COMPANY
8580 N.W. 38th St., Ste. 217 - VIRGINIA GARDENS, FL 33166
Phone : (305)871-1530 . Fax : (305)871-1531
EB 0006719
WALTER A. TILLIT Jr., P. E.
FLORIDA Lic. # 44167

ASSA/60mm BERTHA ROLL-UP

SHUTTERPRO HURRICANE SHUTTERS INC.
(ASSA # 253)
4491 S. RIDGEWOOD AVE.
PORT ORANGE, FL. 32119

REV. No	DESCRIPTION	DATE	REV. No	DESCRIPTION	DATE
1	–	–	3		
2	–	–	4		

AS SHOWN SCALE

9/24/01 DATE

01-267 DRAWING No

SHEET 10 OF 14

STORM BAR LOADING CHART

MAXIMUM DESIGN PRESSURE RATING "W" (p. s. f.) AND CORRESPONDING MAXIMUM SPAN "L" FOR A GIVEN TYPE OF STORM BAR AND STORM BAR SPACING.

(USE NEGATIVE PRESSURE VALUES AS PER ASCE 7-88)

MAX. SPAN FOR STORM BARS W/REGULAR CONCRETE ANCHORS

MAXIMUM DESIGN LOAD "W" (p.s.f.)	TYPE 4 STORM BAR 2" x 4" x .250"					TYPE 5 STORM BAR (2) 2" x 4" x .250"				
	STORM BAR SPACING					STORM BAR SPACING				
	≤ 3'-0"	3' TO 4'	4' TO 5'*	5' TO 6'	6' TO 6.5'	≤ 3'-0"	3' TO 4'	4' TO 5'*	5' TO 6'	6' TO 6.5'
40	11'-10"	11'-0"	10'-5"	9'-11"	9'-11"	14'-1"	13'-1"	12'-5"	11'-10"	11'-7"
45	11'-6"	10'-8"	10'-1"	9'-8"	9'-8"	13'-8"	12'-9"	12'-0"	11'-6"	11'-3"
50	11'-2"	10'-5"	9'-10"	9'-5"	9'-5"	13'-4"	12'-5"	11'-9"	11'-2"	11'-0"
55	10'-11"	10'-2"	9'-7"	9'-2"	–	13'-0"	12'-1"	11'-5"	10'-11"	–
60	10'-8"	10'-0"	9'-5"	9'-0"	–	12'-9"	11'-10"	11'-2"	10'-8"	–
65	10'-6"	9'-9"	9'-3"	8'-10"	–	12'-6"	11'-7"	11'-0"	10'-6"	–
70	10'-4"	9'-7"	9'-1"	8'-8"	–	12'-3"	11'-5"	10'-9"	10'-4"	–
75	10'-1"	9'-5"	8'-11"	8'-6"	–	12'-0"	11'-2"	10'-7"	10'-1"	–
80	9'-11"	9'-3"	8'-9"	8'-4"	–	11'-10"	11'-0"	10'-5"	9'-11"	–
85	9'-10"	9'-2"	8'-8"	8'-3"	–	11'-8"	10'-10"	10'-3"	9'-10"	–
90	9'-8"	9'-0"	8'-6"	8'-0"	–	11'-6"	10'-8"	10'-1"	9'-8"	–
95	9'-6"	8'-10"	8'-5"	7'-9"	–	11'-4"	10'-7"	10'-0"	9'-6"	–
100	9'-5"	8'-9"	8'-3"	7'-7"	–	11'-2"	10'-5"	9'-10"	9'-5"	–
105	9'-4"	8'-8"	8'-1"	7'-5"	–	11'-1"	10'-4"	9'-9"	9'-4"	–
110	9'-2"	8'-7"	7'-11"	7'-3"	–	10'-11"	10'-2"	9'-7"	9'-2"	–
115	9'-1"	8'-6"	7'-9"	7'-1"	–	10'-10"	10'-1"	9'-6"	9'-1"	–
120	9'-0"	8'-4"	7'-7"	6'-11"	–	10'-8"	9'-11"	9'-5"	9'-0"	–
125	8'-11"	8'-3"	7'-5"	6'-9"	–	10'-7"	9'-10"	9'-4"	8'-11"	–
130	8'-10"	8'-2"	7'-3"	6'-8"	–	10'-6"	9'-9"	9'-3"	8'-10"	–
135	8'-9"	8'-0"	7'-2"	6'-6"	–	10'-5"	9'-8"	9'-2"	8'-9"	–
140	8'-8"	7'-11"	7'-0"	6'-5"	–	10'-4"	9'-7"	9'-1"	8'-8"	–
145	8'-7"	7'-8"	6'-11"	6'-3"	–	10'-2"	9'-6"	9'-0"	8'-7"	–
150	8'-6"	7'-7"	6'-9"	6'-2"	–	10'-1"	9'-5"	8'-11"	8'-6"	–
155	8'-5"	7'-5"	6'-8"	6'-1"	–	10'-0"	9'-4"	8'-10"	8'-5"	–
160	8'-4"	7'-4"	6'-7"	6'-0"	–	9'-11"	9'-3"	8'-9"	8'-4"	–
165	8'-4"	7'-3"	6'-5"	5'-11"	–	9'-11"	9'-2"	8'-8"	8'-4"	–
170	8'-3"	7'-1"	6'-4"	5'-10"	–	9'-10"	9'-2"	8'-8"	8'-3"	–
175	8'-1"	7'-0"	6'-3"	5'-9"	–	9'-9"	9'-1"	8'-7"	8'-2"	–
180	8'-0"	6'-11"	6'-2"	5'-8"	–	9'-8"	9'-0"	8'-6"	8'-1"	–
185	7'-10"	6'-10"	6'-1"	5'-7"	–	9'-7"	8'-11"	8'-5"	8'-0"	–
190	7'-9"	6'-9"	6'-0"	5'-6"	–	9'-6"	8'-11"	8'-5"	7'-11"	–
195	7'-8"	6'-8"	5'-11"	5'-5"	–	9'-6"	8'-10"	8'-4"	7'-9"	–
200	7'-7"	6'-7"	5'-10"	5'-4"	–	9'-5"	8'-9"	8'-3	7'-8"	–
205	7'-6"	6'-6"	5'-10"	5'-3"	–	9'-4"	8'-9"	8'-3"	7'-7"	–
210	7'-5"	6'-5"	5'-9"	5'-3"	–	9'-4"	8'-8"	8'-2"	7'-6"	–
215	7'-4"	6'-4"	5'-8"	5'-2"	–	9'-3"	8'-7"	8'-1"	7'-5"	–
220	7'-3"	6'-2"	5'-7"	5'-1"	–	9'-2"	8'-7"	8'-0"	7'-4"	–
225	7'-2"	6'-1"	5'-6"	5'-1"	–	9'-2"	8'-6"	7'-11"	7'-3"	–

* STORM BAR SPACING SHALL BE SUCH THAT MAXIMUM SLAT SPAN SHALL NOT BE EXCEEDED.

9/25/01

PRODUCT REVISED
as complying with the Florida Building Code
Acceptance No 02-0502.11
Expiration Date December 1, 2006
By
Miami Dade Product Control Division

APPROVED AS COMPLYING WITH THE SOUTH FLORIDA BUILDING CODE
DATE DEC 06 2001
BY
PRODUCT CONTROL DIVISION
BUILDING CODE COMPLIANCE OFFICE
ACCEPTANCE NO. 01-1002.02

MIAMI-DADE COUNTY

TILTECO INC.
TILLIT TESTING & ENGINEERING COMPANY
8080 N.W. 33rd. St., Ste. 217 - VIRGINIA GARDENS, FL 33166
Phone : (305)871-1530 . Fax : (305)871-1531
EB 0006719
WALTER A. TILLIT Jr., P. E.
FLORIDA Lic. # 44167

ASSA/60mm BERTHA ROLL-UP

SHUTTERPRO HURRICANE SHUTTERS INC.
(ASSA # 253)
4491 S. RIDGEWOOD AVE.
PORT ORANGE, FL. 32119

REV. No	DESCRIPTION	DATE	REV. No	DESCRIPTION	DATE
1	–	–	3		
2	–	–	4		

AS SHOWN
SCALE

9/24/01
DATE

01-267
DRAWING No

SHEET 11 OF 14

HEADER LOADING CHART

MAXIMUM NEGATIVE DESIGN PRESSURE RATING "W" (p. s. f.) AND CORRESPONDING MAXIMUM SPAN "L" FOR A GIVEN TYPE OF HEADER.

(USE NEGATIVE PRESSURE VALUES AS PER ASCE 7-88)

MAXIMUM DESIGN LOAD "W" (p.s.f.)	TYPE 1 HEADER 2" x 3" X .125"		TYPE 2 HEADER 2" x 4" X .125"			TYPE 3 HEADER 2" x 4" X .250"					TYPE 4 HEADER 2" x 6" X .125"				
	STORM BAR HEIGHT		STORM BAR HEIGHT			STORM BAR HEIGHT					STORM BAR HEIGHT				
	≤ 5'-0"	5' TO 7'	≤ 5'-0"	5' TO 8'	8' TO 10'	≤ 6'-0"	6' TO 8'	8' TO 10'	10' TO 12'	12' TO 14'	≤ 6'-0"	6' TO 8'	8' TO 10'	10' TO 12'	12' TO 14'
40.0	11'-4"	9'-8"	13'-6"	11'-2"	10'-0"	14'-11"	13'-10"	13'-1"	12'-2"	11'-3"	16'-8"	15'-2"	13'-7"	12'-5"	11'-6"
45.0	10'-9"	9'-1"	13'-1"	10'-6"	9'-5"	14'-5"	13'-5"	12'-6"	11'-5"	10'-7"	16'-2"	14'-4"	12'-9"	11'-8"	10'-10"
50.0	10'-3"	8'-8"	12'-7"	10'-0"	8'-11"	14'-1"	13'-1"	11'-11"	10'-10"	10'-1"	15'-8"	13'-7"	12'-2"	11'-1"	10'-3"
55.0	9'-9"	8'-3"	12'-0"	9'-6"	8'-6"	13'-9"	12'-8"	11'-4"	10'-4"	9'-7"	14'-11"	12'-11"	11'-7"	10'-7"	9'-9"
60.0	9'-4"	7'-11"	11'-6"	9'-1"	8'-2"	13'-5"	12'-2"	10'-10"	9'-11"	9'-2"	14'-4"	12'-5"	11'-1"	10'-1"	9'-4"
65.0	8'-11"	7'-7"	11'-1"	8'-9"	7'-10"	13'-2"	11'-8"	10'-5"	9'-6"	8'-10"	13'-9"	11'-11"	10'-8"	9'-9"	9'-0"
70.0	8'-8"	7'-4"	10'-8"	8'-5"	7'-6"	12'-11"	11'-3"	10'-1"	9'-2"	8'-6"	13'-3"	11'-6"	10'-3"	9'-4"	8'-8"
75.0	8'-4"	7'-1"	10'-3"	8'-2"	7'-3"	12'-6"	10'-10"	9'-9"	8'-10"	8'-3"	12'-9"	11'-1"	9'-11"	9'-0"	8'-4"
80.0	8'-1"	6'-10"	10'-0"	7'-10"	7'-1"	12'-2"	10'-6"	9'-5"	8'-7"	7'-11"	12'-5"	10'-9"	9'-7"	8'-9"	8'-1"
85.0	7'-10"	6'-7"	9'-8"	7'-8"	6'-10"	11'-9"	10'-2"	9'-1"	8'-4"	7'-9"	12'-0"	10'-5"	9'-4"	8'-6"	7'-10"
90.0	7'-7"	6'-5"	9'-5"	7'-5"	6'-8"	11'-5"	9'-11"	8'-10"	8'-1"	7'-6"	11'-8"	10'-1"	9'-0"	8'-3"	7'-8"
95.0	7'-5"	6'-3"	9'-2"	7'-3"	6'-6"	11'-2"	9'-8"	8'-8"	7'-11"	7'-4"	11'-4"	9'-10"	8'-10"	8'-0"	7'-5"
100.0	7'-3"	6'-1"	8'-11"	7'-1"	6'-4"	10'-10"	9'-5"	8'-5"	7'-8"	7'-1"	11'-1"	9'-7"	8'-7"	7'-10"	7'-3"
105.0	7'-1"	6'-0"	8'-8"	6'-10"	6'-2"	10'-7"	9'-2"	8'-3"	7'-6"	6'-11"	10'-10"	9'-4"	8'-4"	7'-8"	7'-1"
110.0	6'-11"	5'-10"	8'-6"	6'-9"	6'-0"	10'-4"	9'-0"	8'-0"	7'-4"	6'-9"	10'-7"	9'-2"	8'-2"	7'-6"	6'-11"
115.0	6'-9"	5'-8"	8'-4"	6'-7"	5'-10"	10'-2"	8'-9"	7'-10"	7'-2"	6'-8"	10'-4"	8'-11"	8'-0"	7'-4"	6'-9"
120.0	6'-7"	5'-7"	8'-2"	6'-5"	5'-9"	9'-11"	8'-7"	7'-8"	7'-0"	6'-6"	10'-1"	8'-9"	7'-10"	7'-2"	6'-7"
125.0	6'-6"	5'-5"	8'-0"	6'-4"	5'-8"	9'-9"	8'-5"	7'-6"	6'-10"	6'-4"	9'-11"	8'-7"	7'-8"	7'-0"	6'-6"
130.0	6'-4"	5'-4"	7'-10"	6'-2"	5'-6"	9'-6"	8'-3"	7'-5"	6'-9"	6'-3"	9'-9"	8'-5"	7'-6"	6'-10"	6'-4"
135.0	6'-3"	5'-3"	7'-8"	6'-1"	5'-5"	9'-4"	8'-1"	7'-3"	6'-7"	6'-1"	9'-6"	8'-3"	7'-5"	6'-9"	6'-3"

PRODUCT REVISED
as complying with the Florida
Buiding Code
Acceptance No 02-0502.11
Expiration Date December 6, 2006
By
Miami Dade Product Control
Division

APPROVED AS COMPLYING WITH THE
SOUTH FLORIDA BUILDING CODE
DATE DEC 06 2001
BY
PRODUCT CONTROL DIVISION
BUILDING CODE COMPLIANCE OFFICE
ACCEPTANCE NO. 01-1002.02

MIAMI-DADE COUNTY

9/25/01

TILTECO INC.
TILLIT TESTING & ENGINEERING COMPANY
8585 N.W. 36th. St., Ste. 217 - VIRGINIA GARDENS, FL. 33166
Phone : (305)871-1530 . Fax : (305)871-1531
EB 0006719
WALTER A. TILLIT Jr., P. E.
FLORIDA Lic. # 44167

ASSA/60mm BERTHA ROLL-UP

SHUTTERPRO HURRICANE SHUTTERS INC.
(ASSA # 253)
4491 S. RIDGEWOOD AVE.
PORT ORANGE, FL. 32119

REV. No	DESCRIPTION	DATE	REV. No	DESCRIPTION	DATE
1	-	-	3		
2	-	-	4		

AS SHOWN
SCALE

9/24/01
DATE

01-267
DRAWING No

SHEET 12 OF 14

HEADER LOADING CHART

MAXIMUM NEGATIVE DESIGN PRESSURE RATING "W" (p. s. f.) AND CORRESPONDING MAXIMUM SPAN "L" FOR A GIVEN TYPE OF HEADER.

(USE NEGATIVE PRESSURE VALUES AS PER ASCE 7-88)

MAXIMUM DESIGN LOAD "W" (p.s.f.)	TYPE 1 HEADER 2" x 3" X .125"		TYPE 2 HEADER 2" x 4" X .125"			TYPE 3 HEADER 2" x 4" X .250"					TYPE 4 HEADER 2" x 4" X .125"				
	STORM BAR HEIGHT		STORM BAR HEIGHT			STORM BAR HEIGHT					STORM BAR HEIGHT				
	≤ 5'-0"	5' TO 7'	≤ 5'-0"	5' TO 8'	8' TO 10'	≤ 6'-0"	6' TO 8'	8' TO 10'	10' TO 12'	12' TO 14'	≤ 6'-0"	6' TO 8'	8' TO 10'	10' TO 12'	12' TO 14'
140.0	6'-1"	5'-2"	7'-6"	5'-11"	5'-4"	9'-2"	7'-11"	7'-1"	6'-6"	6'-0"	8'-8"	8'-1"	7'-3"	6'-7"	6'-2"
145.0	6'-0"	5'-1"	7'-5"	5'-10"	5'-3"	9'-0"	7'-10"	7'-0"	6'-5"	5'-11"	8'-6"	8'-0"	7'-1"	6'-6"	6'-0"
150.0	5'-11"	5'-0"	7'-3"	5'-9"	5'-2"	8'-10"	7'-8"	6'-10"	6'-3"	5'-10"	8'-4"	7'-10"	7'-0"	6'-5"	5'-11"
155.0	5'-10"	4'-11"	7'-2"	5'-8"	5'-1"	8'-9"	7'-7"	6'-9"	6'-2"	5'-9"	8'-3"	7'-8"	6'-11"	6'-3"	5'-10"
160.0	5'-9"	4'-10"	7'-1"	5'-7"	5'-0"	8'-7"	7'-5"	6'-8"	6'-1"	5'-7"	8'-1"	7'-7"	6'-9"	6'-2"	5'-9"
165.0	5'-7"	4'-9"	6'-11"	5'-6"	4'-11"	8'-5"	7'-4"	6'-7"	6'-0"	5'-6"	8'-0"	7'-6"	6'-8"	6'-1"	5'-8"
170.0	5'-6"	4'-8"	6'-10"	5'-5"	4'-10"	8'-4"	7'-3"	6'-5"	5'-11"	5'-5"	7'-10"	7'-4"	6'-7"	6'-0"	5'-7"
175.0	5'-6"	4'-7"	6'-9"	5'-4"	4'-9"	8'-3"	7'-1"	6'-4"	5'-10"	5'-4"	7'-9"	7'-3"	6'-6"	5'-11"	5'-6"
180.0	5'-5"	4'-7"	6'-8"	5'-3"	4'-8"	8'-1"	7'-0"	6'-3"	5'-9"	5'-4"	7'-8"	7'-2"	6'-5"	5'-10"	5'-5"
185.0	5'-4"	4'-6"	6'-7"	5'-2"	4'-8"	8'-0"	6'-11"	6'-2"	5'-8"	5'-3"	7'-6"	7'-1"	6'-4"	5'-9"	5'-4"
190.0	5'-3"	4'-5"	6'-6"	5'-1"	4'-7"	7'-11"	6'-10"	6'-1"	5'-7"	5'-2"	7'-5"	6'-11"	6'-3"	5'-8"	5'-3"
195.0	5'-2"	4'-4"	6'-5"	5'-1"	4'-6"	7'-9"	6'-9"	6'-0"	5'-6"	5'-1"	7'-4"	6'-10"	6'-2"	5'-7"	5'-2"
200.0	5'-1"	4'-4"	6'-4"	5'-0"	4'-5"	7'-8"	6'-8"	5'-11"	5'-5"	5'-0"	7'-3"	6'-9"	6'-1"	5'-6"	5'-1"
205.0	5'-1"	4'-3"	6'-3"	4'-11"	4'-5"	7'-7"	6'-7"	5'-11"	5'-4"	5'-0"	7'-2"	6'-8"	6'-0"	5'-6"	5'-1"
210.0	5'-0"	4'-3"	6'-2"	4'-10"	4'-4"	7'-6"	6'-6"	5'-10"	5'-4"	4'-11"	7'-1"	6'-7"	5'-11"	5'-5"	5'-0"
215.0	4'-11"	4'-2"	6'-1"	4'-10"	4'-4"	7'-5"	6'-5"	5'-9"	5'-3"	4'-10"	7'-0"	6'-6"	5'-10"	5'-4"	4'-11"
220.0	4'-10"	4'-1"	6'-0"	4'-9"	4'-3"	7'-4"	6'-4"	5'-8"	5'-2"	4'-10"	6'-11"	6'-6"	5'-9"	5'-3"	4'-11"
225.0	4'-10"	4'-1"	5'-11"	4'-8"	4'-2"	7'-3"	6'-3"	5'-7"	5'-1"	4'-9"	6'-10"	6'-5"	5'-9"	5'-3"	4'-10"

PRODUCT REVISED
as complying with the Florida Buiding Code
Acceptance No # 20502.11
Expiration Date December 6, 2006
By
Miami Dade Product Control Division

APPROVED AS COMPLYING WITH THE SOUTH FLORIDA BUILDING CODE
DATE DEC 0 6 2001
BY
PRODUCT CONTROL DIVISION
BUILDING CODE COMPLIANCE OFFICE
ACCEPTANCE NO. 01-1002.02

MIAMI-DADE COUNTY

9/25/01

TILTECO INC.
TILLIT TESTING & ENGINEERING COMPANY
8585 N.W. 38th. St., Ste. #117 - VIRGINIA GARDENS, FL. 33166
Phone : (305)871-1530 . Fax : (305)871-1531
EB 0006719
WALTER A. TILLIT Jr., P. E.
FLORIDA Lic. # 44167

ASSA/60mm BERTHA ROLL-UP

AS SHOWN
SCALE

SHUTTERPRO HURRICANE SHUTTERS INC.
(ASSA # 253)
4491 S. RIDGEWOOD AVE.
PORT ORANGE, FL. 32119

9/24/01
DATE

01-267
DRAWING No

REV. No	DESCRIPTION	DATE	REV. No	DESCRIPTION	DATE
1	-	-	3		
2	-	-	4		

SHEET 13 OF 14

MULLION LOADING CHART

MAXIMUM DESIGN PRESSURE RATING "W" (p. s. f.) AND CORRESPONDING MAXIMUM SPAN "L"(Ft) FOR A GIVEN TYPE OF MULLION AND MULLION SPACING (Ft.).

(USE NEGATIVE PRESSURE VALUES AS PER ASCE 7-88)

MAXIMUM DESIGN LOAD "W" (p.s.f.)	TYPE 1 MULLION 3" x 4" x .125"				TYPE 2 MULLION 4" x 4" x .250"				TYPE 3 MULLION 4" x 6" x .250"					
	MULLION SPACING				MULLION SPACING				MULLION SPACING					
	≤ 4'-0"	4' TO 5'	5' TO 6'	6' TO 8'	≤ 4'-0"	4' TO 5'	5' TO 6'	6' TO 8'	≤ 4'-0"	4' TO 5'	5' TO 6'	6' TO 8'	8' TO 10'	10' TO 12
40.0	9'-0"	8'-4"	7'-10"	8'-2"	11'-9"	10'-11"	10'-3"	10'-8"	16'-4"	15'-2"	14'-3"	14'-10"	13'-10"	13'-0"
45.0	8'-8"	8'-0"	7'-7"	7'-10"	11'-4"	10'-6"	9'-10"	10'-3"	15'-8"	14'-7"	13'-9"	14'-4"	13'-3"	12'-6"
50.0	8'-4"	7'-9"	7'-3"	7'-7"	10'-11"	10'-2"	9'-6"	9'-11"	15'-2"	14'-0"	13'-3"	13'-10"	12'-10"	12'-1"
55.0	8'-1"	7'-6"	7'-1"	7'-4"	10'-7"	9'-10"	9'-3"	9'-7"	14'-8"	13'-8"	12'-10"	13'-5"	12'-5"	11'-8"
60.0	7'-10"	7'-3"	6'-10"	7'-2"	10'-3"	9'-7"	8'-11"	9'-4"	14'-3"	13'-3"	12'-5"	13'-0"	12'-1"	11'-4"
65.0	7'-8"	7'-1"	6'-8"	7'-0"	10'-0"	9'-4"	8'-9"	9'-1"	13'-11"	12'-11"	12'-2"	12'-8"	11'-10"	11'-1"
70.0	7'-5"	6'-11"	6'-6"	6'-10"	9'-9"	9'-0"	8'-6"	8'-10"	13'-7"	12'-7"	11'-10"	12'-4"	11'-5"	10'-9"
75.0	7'-3"	6'-9"	6'-4"	6'-8"	9'-6"	8'-10"	8'-4"	8'-8"	13'-3"	12'-3"	11'-7"	12'-1"	11'-2"	10'-6"
80.0	7'-2"	6'-7"	6'-3"	6'-6"	9'-4"	8'-8"	8'-2"	8'-6"	12'-11"	12'-0"	11'-4"	11'-10"	11'-0"	10'-4"
85.0	7'-0"	6'-6"	6'-1"	6'-4"	9'-2"	8'-6"	8'-0"	8'-4"	12'-8"	11'-9"	11'-1"	11'-7"	10'-9"	10'-1"
90.0	6'-10"	6'-4"	6'-0"	6'-3"	9'-10"	8'-4"	7'-10"	8'-2"	12'-5"	11'-7"	10'-11"	11'-4"	10'-6"	9'-11"
95.0	6'-9"	6'-3"	5'-11"	6'-2"	8'-10"	8'-2"	7'-8"	8'-0"	12'-3"	11'-4"	10'-8"	11'-2"	10'-4"	9'-9"
100.0	6'-7"	6'-2"	5'-9"	6'-0"	8'-8"	8'-1"	7'-7"	7'-11"	12'-0"	11'-2"	10'-6"	11'-0"	10'-2"	9'-7"
105.0	6'-6"	6'-1"	5'-8"	5'-11"	8'-6"	7'-11"	7'-5"	7'-9"	11'-10"	11'-0"	10'-4"	10'-9"	–	–
110.0	6'-5"	5'-11"	5'-7"	5'-10"	8'-5"	7'-10"	7'-4"	7'-8"	11'-8"	10'-10"	10'-2"	10'-7"	–	–
115.0	6'-4"	5'-10"	5'-6"	5'-9"	8'-3"	7'-8"	7'-3"	7'-6"	11'-6"	10'-8"	10'-0"	10'-6"	–	–
120.0	6'-3"	5'-9"	5'-5"	5'-8"	8'-2"	7'-7"	7'-1"	7'-5"	11'-4"	10'-6"	9'-11"	10'-4"	–	–
125.0	6'-2"	5'-8"	5'-4"	5'-7"	8'-0"	7'-6"	7'-0"	7'-4"	11'-2"	10'-4"	9'-9"	10'-2"	–	–
130.0	6'-1"	5'-8"	5'-4"	5'-6"	7'-11"	7'-5"	6'-11"	7'-3"	11'-0"	10'-3"	9'-8"	10'-0"	–	–
135.0	6'-0"	5'-7"	5'-3"	5'-5"	7'-10"	7'-3"	6'-10"	7'-2"	10'-11"	10'-1"	9'-6"	9'-11"	–	–
140.0	5'-11"	5'-6"	5'-2"	5'-5"	7'-9"	7'-2"	6'-9"	7'-1"	10'-9"	10'-0"	9'-5"	9'-10"	–	–
145.0	5'-10"	5'-5"	5'-1"	5'-4"	7'-8"	7'-1"	6'-8"	7'-0"	10'-8"	9'-10"	9'-3"	9'-8"	–	–
150.0	5'-9"	5'-4"	5'-1"	5'-3"	7'-7"	7'-0"	6'-7"	6'-11"	10'-6"	9'-9"	9'-2"	9'-7"	–	–
155.0	5'-9"	5'-4"	5'-0"	5'-3"	7'-6"	7'-0"	6'-6"	6'-10"	10'-5"	9'-8"	9'-1"	9'-6"	–	–
160.0	5'-8"	5'-3"	4'-11"	5'-2"	7'-5"	6'-11"	6'-5"	6'-9"	10'-3"	9'-7"	9'-0"	9'-4"	–	–
165.0	5'-7"	5'-2"	4'-11"	5'-1"	7'-4"	6'-10"	6'-5"	6'-8"	10'-2"	9'-5"	8'-11"	9'-3"	–	–
170.0	5'-7"	5'-2"	4'-10"	5'-1"	7'-3"	6'-9"	6'-4"	6'-7"	10'-1"	9'-4"	8'-10"	9'-2"	–	–
175.0	5'-6"	5'-1"	4'-10"	5'-0"	7'-2"	6'-8"	6'-3"	6'-6"	10'-0"	9'-3"	8'-9"	9'-1"	–	–
180.0	5'-5"	5'-1"	4'-9"	5'-0"	7'-2"	6'-7"	6'-3"	6'-6"	9'-11"	9'-2"	8'-8"	9'-0"	–	–
185.0	5'-5"	5'-0"	4'-9"	4'-11"	7'-1"	6'-7"	6'-2"	6'-5"	9'-10"	9'-1"	8'-7"	8'-11"	–	–
190.0	5'-4"	5'-0"	4'-8"	4'-10"	7'-0"	6'-6"	6'-1"	6'-4"	9'-9"	9'-0"	8'-6"	8'-10"	–	–
195.0	5'-4"	4'-11"	4'-8"	4'-10"	6'-11"	6'-5"	6'-1"	6'-4"	9'-8"	8'-11"	8'-5"	8'-9"	–	–
200.0	5'-3"	4'-11"	4'-7"	4'-9"	6'-11"	6'-5"	6'-0"	6'-3"	9'-7"	8'-10"	8'-4"	8'-8"	–	–
205.0	5'-3"	4'-10"	4'-7"	4'-9"	6'-10"	6'-4'	5'-11"	6'-2"	9'-6"	8'-9"	8'-3"	8'-8"	–	–
210.0	5'-2"	4'-10"	4'-6"	4'-9"	6'-9"	6'-4"	5'-11"	6'-2"	9'-5"	8'-8"	8'-2"	8'-7"	–	–
215.0	5'-2"	4'-9"	4'-6"	4'-8"	6'-9"	6'-3"	5'-10"	6'-1"	9'-4"	8'-8"	8'-2"	8'-6"	–	–
220.0	5'-1"	4'-9"	4'-5"	4'-8"	6'-8"	6'-2"	5'-10"	6'-1"	9'-3"	8'-7"	8'-1"	8'-5"	–	–
225.0	5'-1"	4'-8"	4'-5"	4'-7"	6'-7"	6'-2"	5'-9"	6'-0"	9'-2"	8'-6"	8'-0"	8'-4"	–	–

NOTES : REFER TO ELEVATIONS ON SHEET 1 OF 14

1-. FOR MULLIONS INSTALLED W/O STORM BARS

A) MULLION SPACING SHALL BE SUCH THAT MAXIMUM SLAT SPAN SHALL NOT BE EXCEEDED

2-. FOR MULLIONS INSTALLED W/ STORM BARS & HEADERS

A) MULLION SPACING SHALL BE SUCH THAT MAXIMUM HEADER SPAN SHALL NOT BE EXCEEDED

B) STORM BAR SPACING SHALL BE SUCH THAT MAXIMUM SLAT SPAN SHALL NOT BE EXCEEDED

PRODUCT REVISED
as complying with the Florida Building Code
Acceptance No. 02-0507.11
Expiration Date December 6, 2006
By
Miami-Dade Product Control Division

APPROVED AS COMPLYING WITH THE SOUTH FLORIDA BUILDING CODE
DATE DEC 06 2001
BY
PRODUCT CONTROL DIVISION
BUILDING CODE COMPLIANCE OFFICE
ACCEPTANCE NO. 01-1002.02

MIAMI-DADE COUNTY

9/25/01

TILTECO INC.
TILLIT TESTING & ENGINEERING COMPANY
8380 N.W. 36th. St., Ste. 217 - VIRGINIA GARDENS, FL. 33166
Phone : (305)871-1330 . Fax : (305)871-1331
EB 0006719
WALTER A. TILLIT Jr., P. E.
FLORIDA Lic. # 44167

ASSA/60mm BERTHA ROLL-UP

SHUTTERPRO HURRICANE SHUTTERS INC.
(ASSA # 253)
4491 S. RIDGEWOOD AVE.
PORT ORANGE, FL. 32119

REV. No	DESCRIPTION	DATE	REV. No	DESCRIPTION	DATE
1	-	-	3		
2	-	-	4		

AS SHOWN SCALE

9/24/01 DATE

01-267 DRAWING No

SHEET 14 OF 14