MIAMI-DADE

BUILDING CODE COMPLIANCE OFFICE (BCCO)
PRODUCT CONTROL DIVISION

MIAMI-DADE COUNTY, FLORIDA
METRO-DADE FLAGLER BUILDING
140 WEST FLAGLER STREET, SUITE 1603
MIAMI, FLORIDA 33130-1563
(305) 375-2901 FAX (305) 375-2908

NOTICE OF ACCEPTANCE (NOA)

Precision Aluminum Products, Inc.
1339 S.W. 1st Way
Deerfield Beach, Florida 33441

SCOPE:

This NOA is being issued under the applicable rules and regulations governing the use of construction materials. The documentation submitted has been reviewed by Miami-Dade County Product Control Division and accepted by the Board of Rules and Appeals (BORA) to be used in Miami Dade County and other areas where allowed by the Authority Having Jurisdiction (AHJ).

This NOA shall not be valid after the expiration date stated below. The Miami-Dade County Product Control Division (In Miami Dade County) and/or the AHJ (in areas other than Miami Dade County) reserve the right to have this product or material tested for quality assurance purposes. If this product or material fails to perform in the accepted manner, the manufacturer will incur the expense of such testing and the AHJ may immediately revoke, modify, or suspend the use of such product or material within their jurisdiction. BORA reserves the right to revoke this acceptance, if it is determined by Miami-Dade County Product Control Division that this product or material fails to meet the requirements of the applicable building code.

This product is approved as described herein, and has been designed to comply with the High Velocity Hurricane Zone of the Florida Building Code.

DESCRIPTION: Aluminum Roof Stand Frame Support for A/C Condensing Units

APPROVAL DOCUMENT: Drawing No. 10, titled " Adjustable Condensing Unit Base Aluma Stand Exposure C ", sheets 1 and 2 of 2, prepared by Bromley-Cook Engineering, Inc., last revision dated December 04, 2002 bearing the Miami-Dade County Product Control Revision stamp with the Notice of Acceptance number and expiration date by the Miami-Dade County Product Control Division.

MISSILE IMPACT RATING: None

LABELING: Each stand shall bear a permanent label with the manufacturer's name or logo, city, state and the following statement: "Miami-Dade County Product Control Approved", unless otherwise noted herein.

RENEWAL of this NOA shall be considered after a renewal application has been filed and there has been no change in the applicable building code negatively affecting the performance of this product.

TERMINATION of this NOA will occur after the expiration date or if there has been a revision or change in the materials, use, and/or manufacture of the product or process. Misuse of this NOA as an endorsement of any product, for sales, advertising or any other purposes shall automatically terminate this NOA. Failure to comply with any section of this NOA shall be cause for termination and removal of NOA.

ADVERTISEMENT: The NOA number preceded by the words Miami-Dade County, Florida, and followed by the expiration date may be displayed in advertising literature. If any portion of the NOA is displayed, then it shall be done in its entirety.

INSPECTION: A copy of this entire NOA shall be provided to the user by the manufacturer or its distributors and shall be available for inspection at the job site at the request of the Building Official.

This NOA **revises & renews NOA # 99-0413.01** & consists of this page 1 & approval document mentioned above
The submitted documentation was reviewed by **Helmy A. Makar, P.E.**

PRODUCT CONTROL ACCEPTED

NOA No 02-0514.02
Expiration Date: 05/14/2007
Approval Date: 01/02/2003

ADJUSTABLE CONDENSING UNIT BASE
"ALUMA STAND" Exposure "C"

Typical A/C Unit

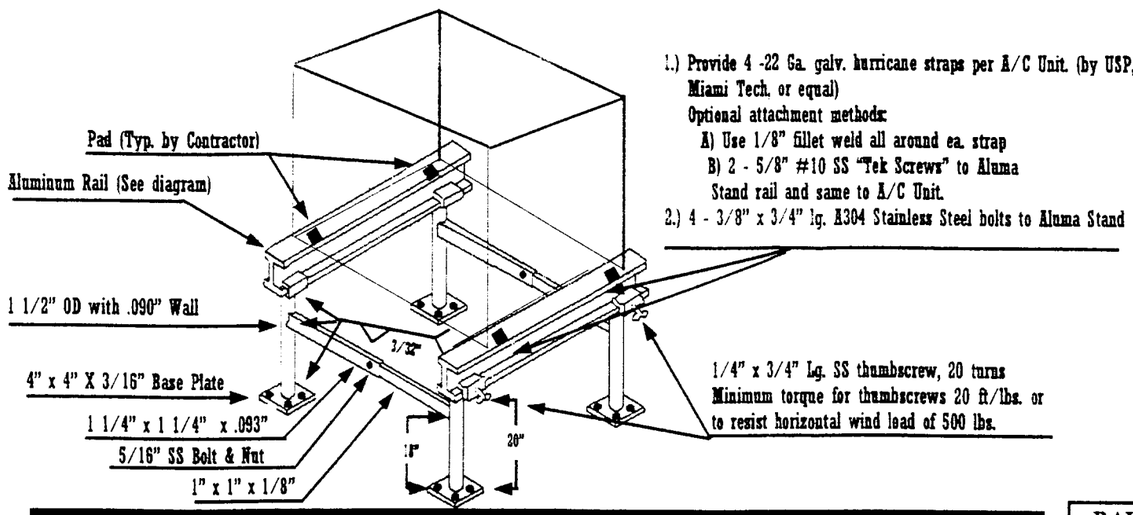

1.) Provide 4 -22 Ga. galv. hurricane straps per A/C Unit. (by USP, Miami Tech. or equal)
Optional attachment methods:
A) Use 1/8" fillet weld all around ea. strap
B) 2 - 5/8" #10 SS "Tek Screws" to Aluma Stand rail and same to A/C Unit.

2.) 4 - 3/8" x 3/4" lg. A304 Stainless Steel bolts to Aluma Stand

1/4" x 3/4" Lg. SS thumbscrew, 20 turns Minimum torque for thumbscrews 20 ft/lbs. or to resist horizontal wind load of 500 lbs.

Complies With ASCE 7-98

DESIGN WIND PRESSURE	
	Maximum Wind Pressure
A/C Stand on Concrete Roof or Steel Joist Structure	*67.8 psf*
A/C Stand on Wood Deck Roof	*59.0 psf*

12/4/02

A/C STAND REACTIONS TABLE

ROOF MATERIAL	ALLOWABLE ELEVATION @ 146 MPH	ALLOWABLE ELEVATION @ 150 MPH	ALLOWABLE WGT/UNIT	UPLIFT	LATERAL	COMPRESSION	BENDING MOMENT
Concrete Deck Steel Bar Joist	85'	65'	300 lbs	285#	155#	474#	130.0 ft lb
Wood Deck	45'	33'	300 lbs	235#	135#	474#	115.0 ft lb

PRODUCT REVISED
as complying with the Florida Building Code
Acceptance No 02-0514.02
Expiration Date 05/14/2007
By Helena A. Melo
Miami Dade Product Control Division

Notes:

1 Frames 6061-T6/6005-T5 Aluminum Alloy (an exterior exposure alloy), all joints welded, other than shown
2 Yield strength shall be 35 ksi and conform to the American Aluminum Association standards
3 Weld filler shall be aluminum alloy 4043 with a tensile strength of 15 ksi
4 Frame withstands wind loads as per 2001 Florida Building Code & ASCE 7-98
5 It is the responsibility of the installing contractor to provide adequate anchorage as shown on this plan, and to provide corrosion resistant isolation pads at the bottom of the base plates when bearing on concrete and steel structures
6 Expansion bolts & lags screws shall have a minimum spacing of 2.5" & a minimum edge distance of 1" for lags and 3" for expansion bolts
7 Vibration isolator pads shall be provided by the A/C Contractor so as not to cause vibration to existing sub-structure
8 Calculations are based on the surface of the A/C unit. This is determined by multiplying the unit width by the unit height, with the result being the surface square footage. The maximum sizes allowed for the Aluma Stand are denoted in the table depicted on page 2.

RAIL SECTION

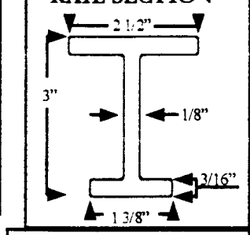

CLAMP DETAIL

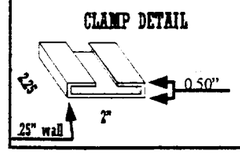

BASE PLATE DETAIL

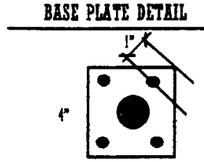

3/16" Thick 4"

Typical Connection to Std. Weight Concrete

FASTENERS:
4 - 1/4" Hilti "KWIK Bolt II"+ w/ 2" Min. Embedment
OR
4 - 1/4" Dia. Rawl Mushroom Head Spikes w/ 1 1/4" Min. Embedment

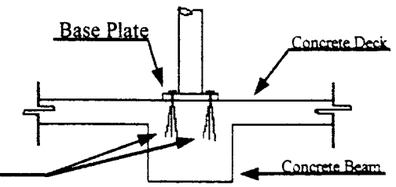

Typical Connection to Steel Joist

Cut away metal deck plate to bear directly on joist top chard

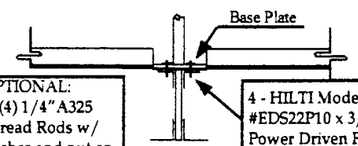

OPTIONAL:
Four (4) 1/4" A325 All-Thread Rods w/ 1/2" washer and nut on top and bottom

4 - HILTI Model #EDS22P10 x 3/4" Lg. Power Driven Fasteners (typ. ea. baseplate)

Joist Stiffener Requirements

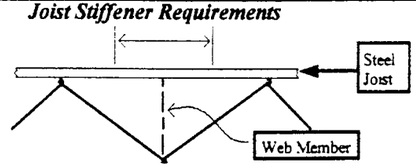

Add web member when A/C stand support is not on panel points

Typical Connection to Wood Beam/Truss

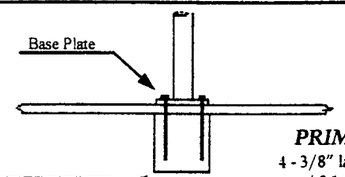

PRIMARY
4 - 3/8" lag screws w / 2 1/2" Min. Embedment into Beam/Truss (typ. Ea. Base Plate)

Bromley-Cook Engineering
Structural Engineering Services
William Cook, P.E. #43904
2004 N.E. 49th St
Ft Lauderdale, Fl. 33308

1339 SW 1st Way
Deerfield Beach, Fl. 33441
(954) 480-6919

Precision Aluminum Products, Inc

Drawn By: CNP

Revision Dates
11/25/97
12/4/01
2/27/02
10/8/02
12/04/02

Drawing 10
Sheet 1 of 2

System Configurations

Drawings Are Not To Scale

PRODUCT REVISED
as complying with the Florida
Building Code
Acceptance No. 02-0514.02
Expiration Date 05/14/2007
By Helena A. Molina
Miami Dade Product Control
Division

UNIT/SIZE TABLE					
Stand Size	3 Foot	3 Foot	6 Foot	9 Foot	12 Foot
Roof Type	Steel/Concrete	Wood	All Roofs	All Roofs	All Roofs
Multiple Units Max # Units Max Size Ea.	*1* *9 Sq Ft*	*1* *7.5 Sq Ft*	*2* *4 Sq Ft*	*3* *4 Sq Ft*	*4* *4 Sq Ft*
Single Unit	*9 Sq Ft*	*7.5 Sq Ft*	*8 Sq Ft*	*12 Sq Ft*	*16 Sq Ft*

1 UNIT SYSTEM

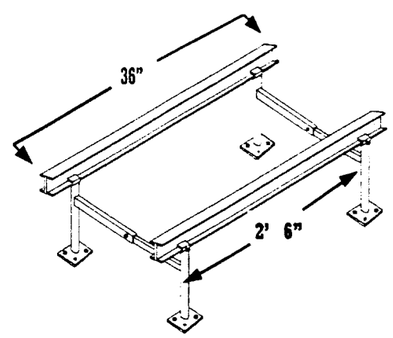

2 UNIT SYSTEM

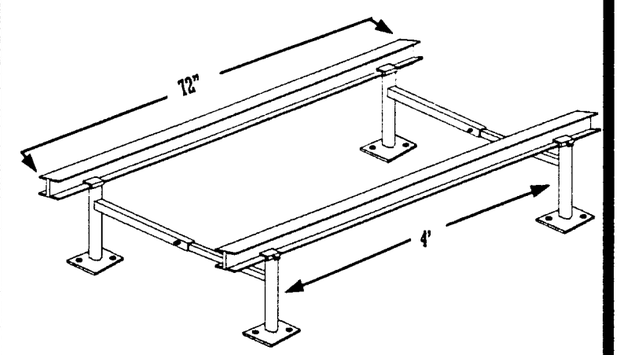

3 UNIT STAND

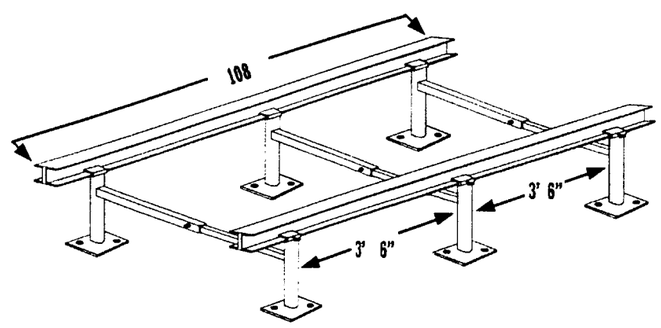

4 UNIT SYSTEM

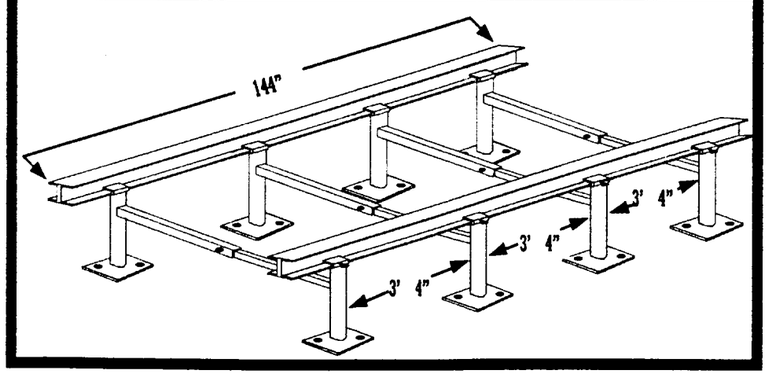

12/4/02

Bromley-Cook Engineering
Structural Engineering Services
William Cook, P.E. #43904
2004 N.E. 49th St
Ft Lauderdale, Fl. 33308

Precision Aluminum Products, Inc
1339 SW 1st Way
Deerfield Beach, Fl. 33441
(954) 480-6919

Drawn By:
CNP

Revision Dates
11/25/97
12/4/01
2/27/02
10/8/02
12/04/02

Drawing 10
Sheet
2 of 2