MIAMI-DADE

BUILDING CODE COMPLIANCE OFFICE (BCCO)
PRODUCT CONTROL DIVISION

MIAMI-DADE COUNTY, FLORIDA
METRO-DADE FLAGLER BUILDING
140 WEST FLAGLER STREET, SUITE 1603
MIAMI, FLORIDA 33130-1563
(305) 375-2901 FAX (305) 375-2908

NOTICE OF ACCEPTANCE (NOA)

Kawneer Company, Inc.
55 Guthridge court
Norcross, GA 30092

SCOPE:
This NOA is being issued under the applicable rules and regulations governing the use of construction materials. The documentation submitted has been reviewed by Miami-Dade County Product Control Division and accepted by the Board of Rules and Appeals (BORA) to be used in Miami Dade County and other areas where allowed by the Authority Having Jurisdiction (AHJ).

This NOA shall not be valid after the expiration date stated below. The Miami-Dade County Product Control Division (In Miami Dade County) and/or the AHJ (in areas other than Miami Dade County) reserve the right to have this product or material tested for quality assurance purposes. If this product or material fails to perform in the accepted manner, the manufacturer will incur the expense of such testing and the AHJ may immediately revoke, modify, or suspend the use of such product or material within their jurisdiction. BORA reserves the right to revoke this acceptance, if it is determined by Miami-Dade County Product Control Division that this product or material fails to meet the requirements of the applicable building code.

This product is approved as described herein, and has been designed to comply with the High Velocity Hurricane Zone of the Florida Building Code.

DESCRIPTION: Series "350-MS" Outswing Aluminum Storefront Doors w/ Panic Devices-Impact

APPROVAL DOCUMENT: Drawing No. **T233-951**, titled "Kawneer 30 doors-Impact" Sheets 1 through 12 of 12, dated 05/08/02 and last revised on 01-29-03, prepared by manufacturer, bearing the Miami-Dade County Product Control Approval stamp with the Notice of Acceptance number and approval date by the Miami-Dade County Product Control Division.

MISSILE IMPACT RATING: Large Missile Impact Resistant

LABELING: Each unit shall bear a permanent label with the manufacturer's name or logo, city, state and following statement: "Miami-Dade County Product Control Approved", unless otherwise noted herein.

RENEWAL of this NOA shall be considered after a renewal application has been filed and there has been no change in the applicable building code negatively affecting the performance of this product.

TERMINATION of this NOA will occur after the expiration date or if there has been a revision or change in the materials, use, and/or manufacture of the product or process. Misuse of this NOA as an endorsement of any product, for sales, advertising or any other purposes shall automatically terminate this NOA. Failure to comply with any section of this NOA shall be cause for termination and removal of NOA.

ADVERTISEMENT: The NOA number preceded by the words Miami-Dade County, Florida, and followed by the expiration date may be displayed in advertising literature. If any portion of the NOA is displayed, then it shall be done in its entirety.

INSPECTION: A copy of this entire NOA shall be provided to the user by the manufacturer or its distributors and shall be available for inspection at the job site at the request of the Building Official.
This NOA consists of this page 1 as well as approval document mentioned above.
The submitted documentation was reviewed by **Ishaq I. Chanda, P.E.**

PRODUCT CONTROL ACCEPTED

Kawneer Company, Inc.

NOTICE OF ACCEPTANCE: EVIDENCE SUBMITTED

(For File ONLY. Not part of NOA)

A. DRAWINGS

1. Manufacturer's die drawings and sections.
2. Drawing No. **T233-951**, titled "Kawneer 30 doors-Impact" Sheets 1 through 12 of 12, dated 05/08/02 and last revised on 01-29-03, prepared by manufacturer.

B. TESTS

1. Test reports on 1) Air Infiltration Test, per PA 202-94
   2) Uniform Static Air Pressure Test, Loading per TAS 202-94
   3) Water Resistance Test, per TAS 202-94(Not performed)
   4.) Large Missile Impact Test, TAS PA 201-94
   5.) Cyclic Loading Test, per TAS PA 203-94

   along with installation diagram of an aluminum glazed storefront doors marked-up by American Testing lab of South Florida,. Test Report No. **ATL 0109.01-02** and **ATL 0111.01-02**, both dated 03-18-02 and revised with addendum letter dated January 21, 2003, signed and sealed by William R. Mehner, P. E. and Henry Hatem, P. E. (File contains revised marked-up drawing dated 01-22-03)
2. Additional reference Test reports on 1) Air Infiltration Test, per PA 202-94
   1) Uniform Static Air Pressure Test, Loading per PA 202-94
   2) Large Missile Impact Test, SFBC PA 201-94
   3.) Cyclic Loading Test, per SFBC PA 203-94
   4) Forced Entry Test, Per SFBC 3603.2(b).

   along with installation diagram of aluminum glazed storefront system, marked-up by American Testing lab of South Florida, Test Report No. **ATL 1118.01-99** dated 04-25-00,signed & sealed by William R. Mehner,P. E & Henry Hatem,P. E.

C. CALCULATIONS:

1. Anchor Calculations and structural analysis, dated 05-06-02, prepared by Robert E. Fisher-Wm M. Meyers, P.E. Consulting Engineers, signed and sealed by William M. Meyers, P.E.

D. MATERIAL CERTIFICATIONS

1. Notice of Acceptance No. **01-0205.02** issued to Solutia Inc. for "Saflex / Keepsafe Maximum", expiring on 05/21/06.
2. Notice of Acceptance No. **00-1212.04** issued to E. I. Depont DeNemours for "Butalite PVB Interlayer", expiring on 12/12/05.

E. STATEMENTS

1. Statement letter of conformance & No financial interest, dated 03-15-02 and 05-09-02, respectively, signed by William M. Meyers, P.E.
2. Letters of compliance, (statements of compliance stated in above test reports)
3. Test proposal correspondence dated May 01, 2001 & May 08, 2001.

F. OTHER

1. Test proposal "**01-0354**" approved by BCCO dated November 01, 2001.

Ishaq I. Chanda

Ishaq I. Chanda, P.E.
Product Control Examiner
NOA No 02-0523.05
Expiration Date: February 27, 2008
Approval Date: February 27, 2003

TYPICAL ELEVATIONS
350 DOORS WITH TRIFAB FRAMING AND JACKSON 2086 EXIT DEVICES

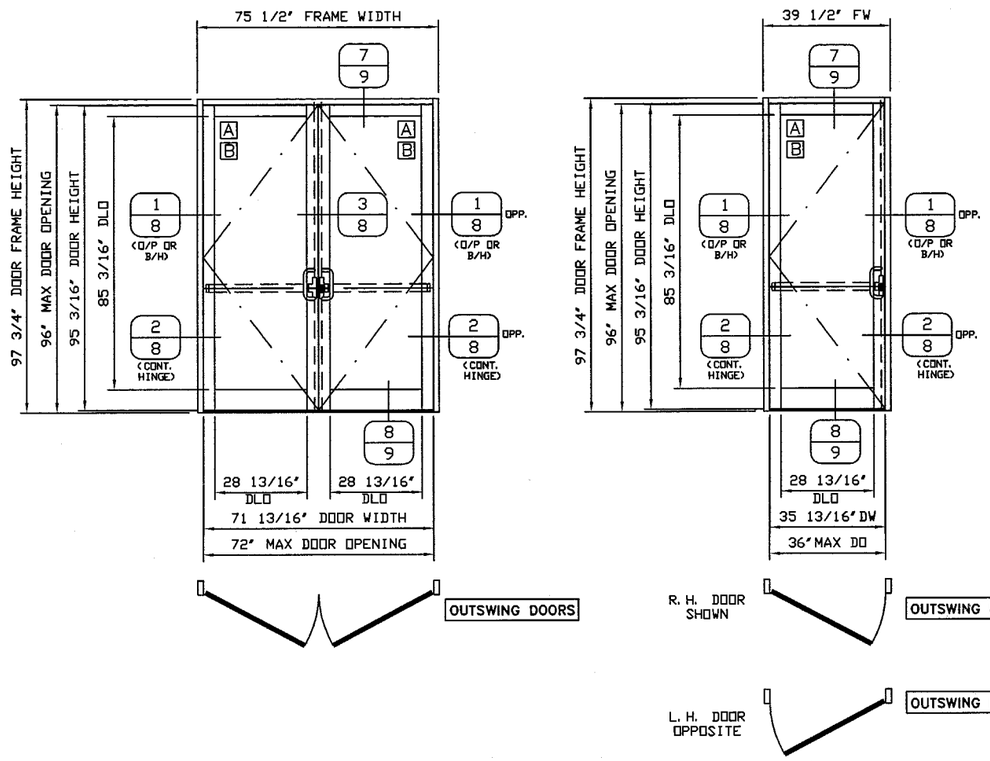

TYPICAL ELEVATIONS
350 DOORS WITH 1600 SUB-FRAME AND JACKSON 2086 EXIT DEVICES

UNDER SEPARATE APPROVAL SEE KAWNEER STOREFRONT/CURTAIN WALL NOA

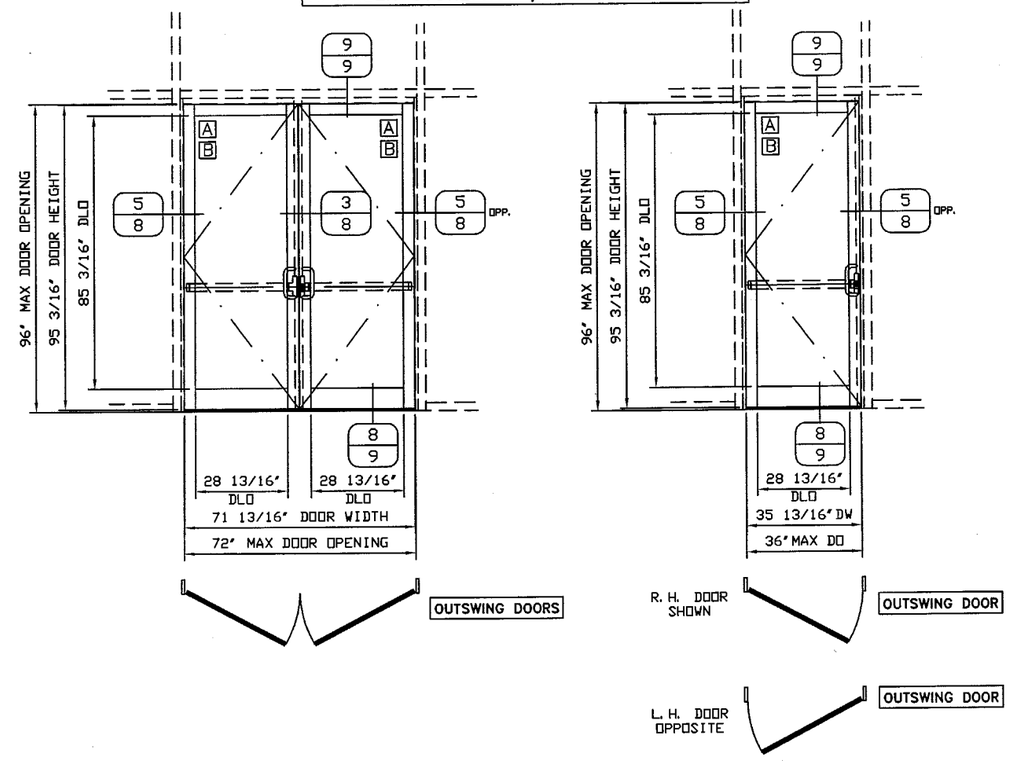

BY	DESCRIPTION OF REVISION	E. C. NO.	REV.	DATE
JME	REVISED PER DADE COUNTY REVIEW	1	2	01-29-03
PTT	REVISED PER DADE COUNTY REVIEW	1	1	01-16-03
JME	INITIAL SUBMITTAL	1	-	05-16-02

GLAZING SCHEDULE

GLASS TYPE	MAX. DLO SIZE
A = 9/16" LAMINATED GLASS 1/4" ANNEALED OUTBOARD / 0.090" SOLUTIA SAFLEX® PVB / 1/4" ANNEALED INBOARD B = 9/16" LAMINATED GLASS 1/4" ANNEALED OUTBOARD / 0.090" DUPONT BUTACITE® PVB / 1/4" ANNEALED INBOARD	28.813" WIDE 85.188" HIGH
TYPICAL DOOR GLASS SIZE = DLO – 1/2"	

DESIGN PRESSURE RATING

	WHERE WATER INFILTRATION REQUIREMENT IS NEEDED	WHERE WATER INFILTRATION REQUIREMENT IS NOT NEEDED
POSITIVE	NOT APPROVED	+65 PSF
NEGATIVE	NOT APPROVED	–65 PSF

ABBREVIATIONS

DLO = DAYLIGHT OPENING
DO = DOOR OPENING
L.H. = LEFT HAND
R.H. = RIGHT HAND
FW = FRAME WIDTH

Approved as complying with the Florida Building Code
Date FEBRUARY 27, 2003
NOA# 02-0523.05
Miami Dade Product Control Division
By Shaq I. Chanda

NOTES:

1. SEE SHEET 7 OF 12 FOR HARDWARE SCHEDULES.
2. SEE SHEET 11 OF 12 FOR ADDITIONAL INFORMATION ON PANIC DEVICE.
3. SEE SHEETS 5, 6 OF 12 FOR PERIMETER FASTENER SCHEDULE AND LOCATIONS FOR PUNCHED OPENING WITH TRIFAB FRAMES.
5. THESE PRODUCTS SHOULD BE USED IN CONJUNCTION WITH THE STANDARD PRODUCT INSTALLATION INSTRUCTIONS AND IN LINE WITH THIS APPROVAL.

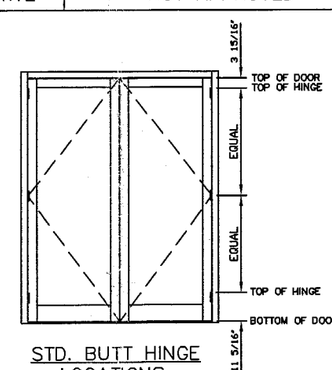

STD. BUTT HINGE LOCATIONS

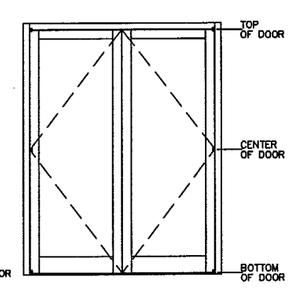

STD. OFFSET PIVOT LOCATIONS

Kawneer
An Alcoa Company
Product Engineering & Development
555 GUTHRIDGE COURT
NORCROSS, GEORGIA 30092
PHONE (770) 449-5555
FAX (770) 734-1560

THIS DRAWING IS FOR DADE COUNTY PRODUCT APPROVAL ONLY

PRODUCT APPROVAL DRAWINGS
KAWNEER 350 DOORS - IMPACT
PANIC EXIT DEVICES
9/16" LAMINATED GLASS
PROTOCOLS PA 201/202/203

DRAWN BY	DATE
PAT T.	05/08/02

DRWG. NO. T233-951

SHEET 1 of 12

T233-951-1.DWG

TYPICAL ELEVATIONS

350 DOORS WITH IR 500 FRAMING AND JACKSON 2086 EXIT DEVICES

UNDER SEPARATE APPROVAL SEE KAWNEER STOREFRONT/CURTAIN WALL NOA

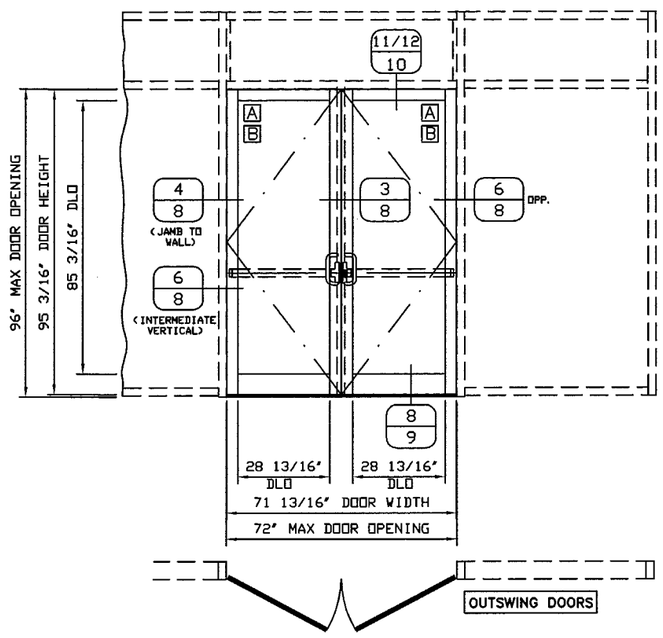

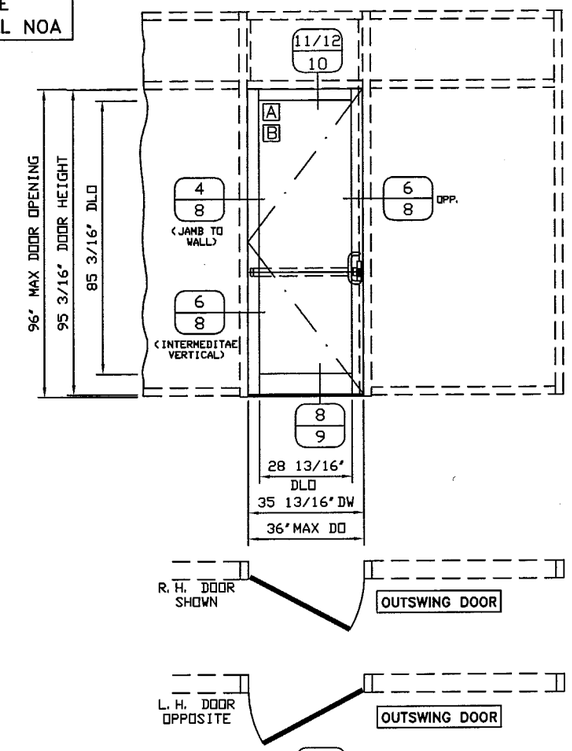

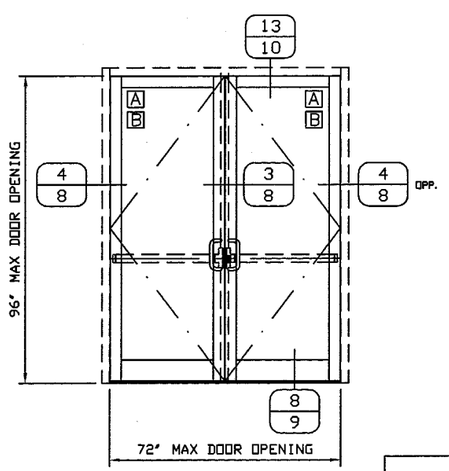

ALTERNATE

NO TRANSOM AND OR SIDELITE

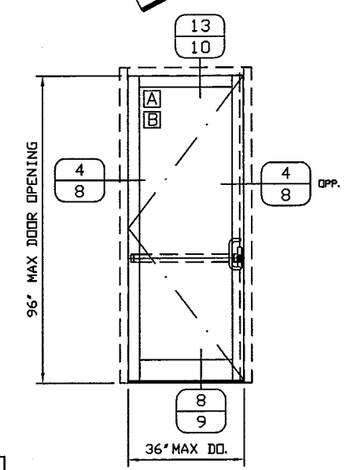

ALTERNATE

NO TRANSOM AND OR SIDELITE

DESIGN PRESSURE RATING		
	WHERE WATER INFILTRATION REQUIREMENT IS NEEDED	WHERE WATER INFILTRATION REQUIREMENT IS NOT NEEDED
POSITIVE	NOT APPROVED	+65 PSF
NEGATIVE	NOT APPROVED	-65 PSF

E. C. NO.	REV.	DATE	DESCRIPTION OF REVISION	BY
-	2	01-29-03	REVISED PER DADE COUNTY REVIEW	JME
-	1	01-16-03	REVISED PER DADE COUNTY REVIEW	PTT
-	-	05-16-02	INITIAL SUBMITTAL	JME

Approved as complying with the Florida Building Code
Date FEB 27, 2003
NOA# 02-0523.05
Miami Dade Product Control Division
By Ishaq I. Chanda

Kawneer
An Alcoa Company
Product Engineering & Development
555 GUTHRIDGE COURT
NORCROSS, GEORGIA 30092
PHONE (770) 449-5555
FAX (770) 734-1560

THIS DRAWING IS FOR DADE COUNTY PRODUCT APPROVAL ONLY

PRODUCT APPROVAL DRAWINGS
KAWNEER 350 DOORS - IMPACT
PANIC EXIT DEVICES
9/16" LAMINATED GLASS
PROTOCOLS PA 201/202/203

DRAWN BY: PAT T.
DATE: 05/08/02
DRWG. NO.: T233-951
SHEET: 2 of 12
T233-951-2.DWG

TYPICAL ELEVATIONS
350 DOORS WITH TRIFAB FRAMING AND PANELINE EXIT DEVICES

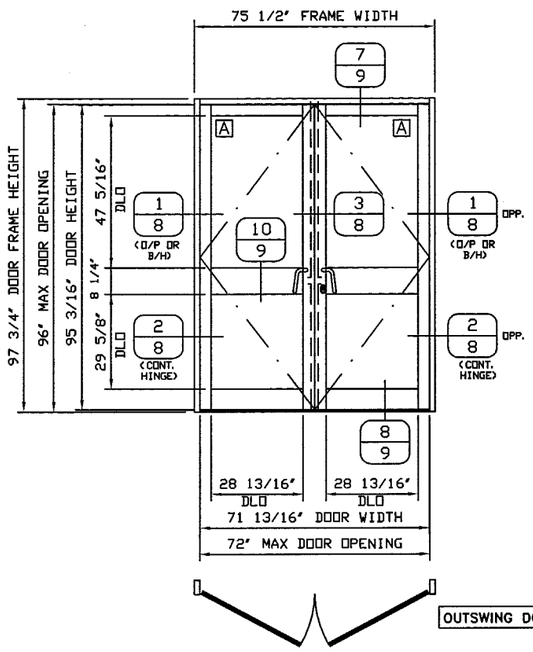

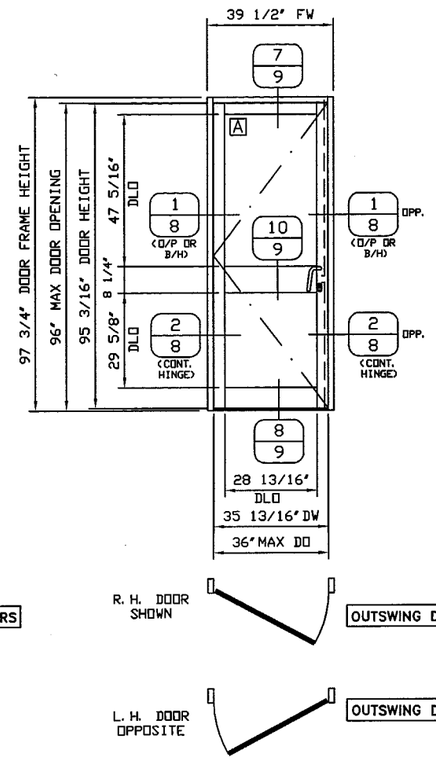

TYPICAL ELEVATIONS
350 DOORS WITH 1600 SUB-FRAME AND PANELINE EXIT DEVICES

UNDER SEPARATE APPROVAL SEE KAWNEER STOREFRONT/CURTAIN WALL NOA

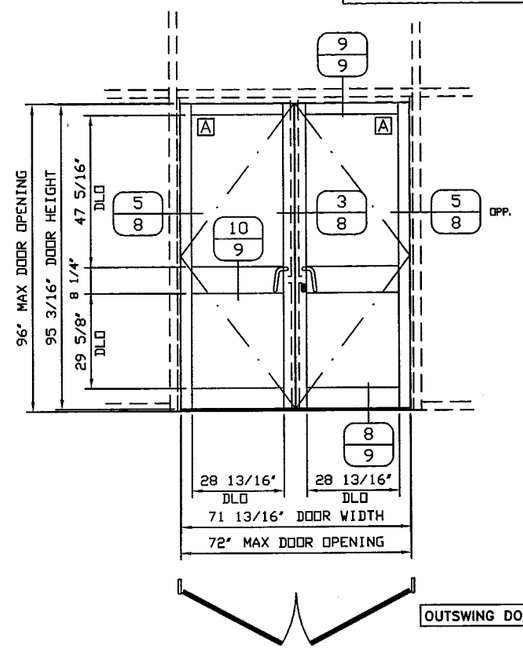

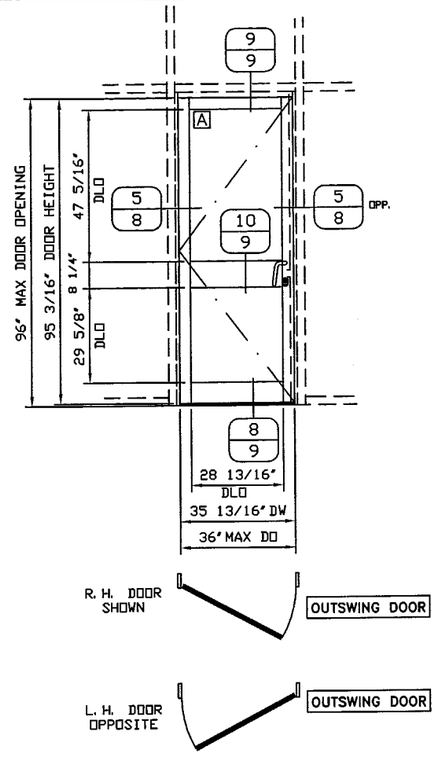

E. C. NO.	REV.	DATE	DESCRIPTION OF REVISION	BY
-	2	01-29-03	REVISED PER DADE COUNTY REVIEW	JME
-	1	01-16-03	REVISED PER DADE COUNTY REVIEW	PTT
-	-	05-16-02	INITIAL SUBMITTAL	JME

GLAZING SCHEDULE

GLASS TYPE	MAX. DLO SIZE
A = 9/16" LAMINATED GLASS 1/4" ANNEALED OUTBOARD / 0.090" SOLUTIA SAFLEX® PVB / 1/4" ANNEALED INBOARD	28.813" WIDE 85.188" HIGH
TYPICAL DOOR GLASS SIZE = DLO – 1/2"	

DESIGN PRESSURE RATING

	WHERE WATER INFILTRATION REQUIREMENT IS NEEDED	WHERE WATER INFILTRATION REQUIREMENT IS NOT NEEDED
POSITIVE	NOT APPROVED	+65 PSF
NEGATIVE	NOT APPROVED	–65 PSF

Approved as complying with the Florida Building Code
Date FEB 27, 2003
NOA# 02-0523.05
Miami Dade Product Control Division
By Shaq I. Chonda

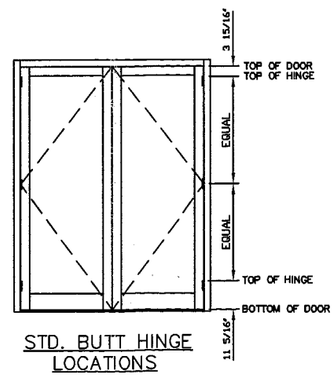

STD. BUTT HINGE LOCATIONS

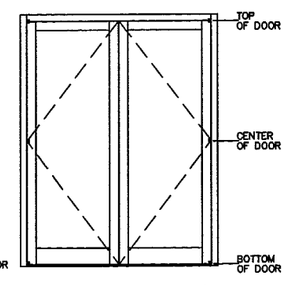

STD. OFFSET PIVOT LOCATIONS

NOTES:

1. SEE SHEET 7 OF 12 FOR HARDWARE SCHEDULES.
2. SEE SHEET 11 OF 12 FOR ADDITIONAL INFORMATION ON PANIC DEVICE.
3. SEE SHEETS 5, 6 OF 12 FOR PERIMETER FASTENER SCHEDULE AND LOCATIONS FOR PUNCHED OPENING WITH TRIFAB FRAMES.
5. THESE PRODUCTS SHOULD BE USED IN CONJUNCTION WITH THE STANDARD PRODUCT INSTALLATION INSTRUCTIONS AND IN LINE WITH THIS APPROVAL.

Kawneer
An Alcoa Company
Product Engineering & Development
555 GUTHRIDGE COURT
NORCROSS, GEORGIA 30092
PHONE (770) 449-5555
FAX (770) 734-1560

PRODUCT APPROVAL DRAWINGS
KAWNEER 350 DOORS - IMPACT
PANIC EXIT DEVICES
9/16" LAMINATED GLASS
PROTOCOLS PA 201/202/203

THIS DRAWING IS FOR DADE COUNTY PRODUCT APPROVAL ONLY

DRAWN BY PAT T.	DATE 05/08/02
DRWG. NO. T233-951	
SHEET 3 of 12	T233-951-3.DWG

TYPICAL ELEVATIONS

350 DOORS WITH IR 500 FRAMING AND PANELINE EXIT DEVICES

UNDER SEPARATE APPROVAL SEE KAWNEER STOREFRONT/CURTAIN WALL NOA

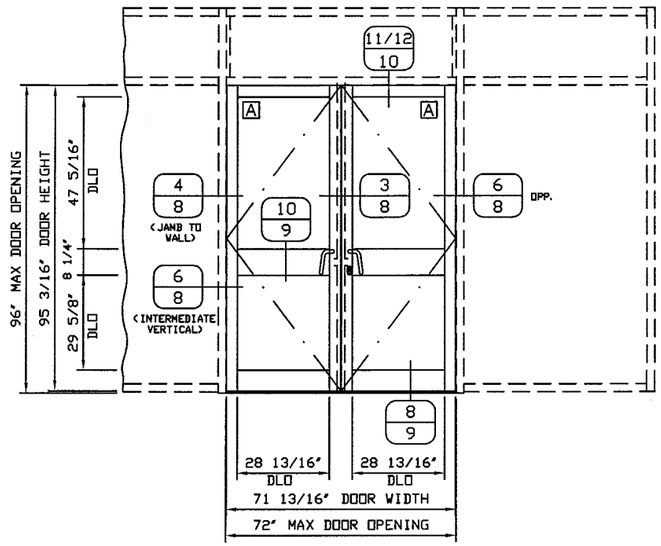

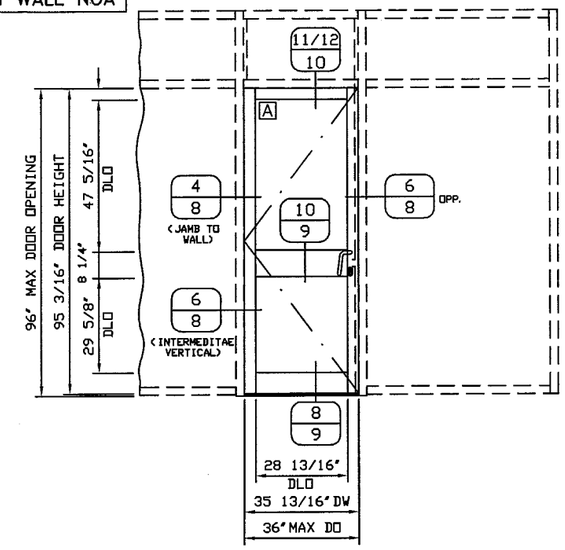

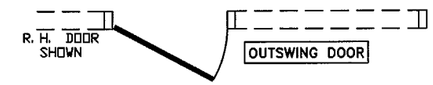

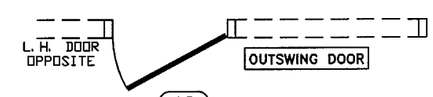

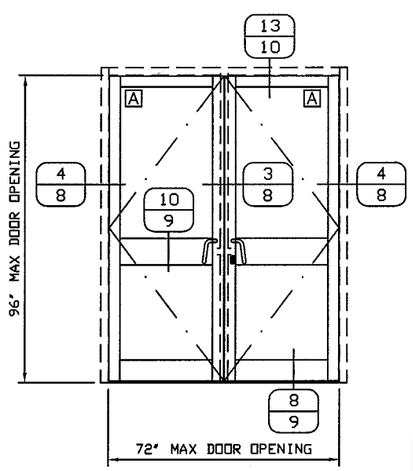

ALTERNATE

NO TRANSOM AND OR SIDELITE

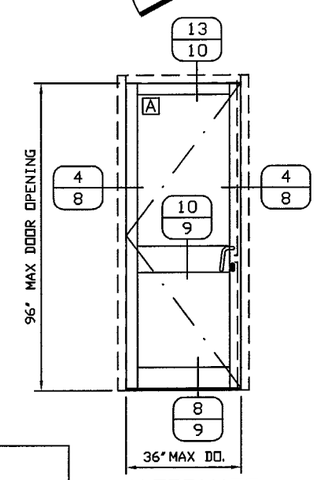

ALTERNATE

NO TRANSOM AND OR SIDELITE

DESIGN PRESSURE RATING		
	WHERE WATER INFILTRATION REQUIREMENT IS NEEDED	WHERE WATER INFILTRATION REQUIREMENT IS NOT NEEDED
POSITIVE	NOT APPROVED	+65 PSF
NEGATIVE	NOT APPROVED	-65 PSF

E. C. NO.	REV.	DATE	DESCRIPTION OF REVISION	BY
-	2	01-29-03	REVISED PER DADE COUNTY REVIEW	JME
-	1	01-16-03	REVISED PER DADE COUNTY REVIEW	PTT
-	-	05-16-02	INITIAL SUBMITTAL	JME

Approved as complying with the Florida Building Code
Date FEB 27, 2003
NOA# 02-0523.05
Miami Dade Product Control Division
By Ishaq I. Chanda

Kawneer
An Alcoa Company
Product Engineering & Development
555 GUTHRIDGE COURT
NORCROSS, GEORGIA 30092
PHONE (770) 449-5555
FAX (770) 734-1560

THIS DRAWING IS FOR DADE COUNTY PRODUCT APPROVAL ONLY

PRODUCT APPROVAL DRAWINGS
KAWNEER 350 DOORS - IMPACT
PANIC EXIT DEVICES
9/16" LAMINATED GLASS
PROTOCOLS PA 201/202/203

DRAWN BY: PAT T.
DATE: 05/08/02
DRWG. NO.: T233-951
SHEET: 4 of 12
T233-951-4.DWG

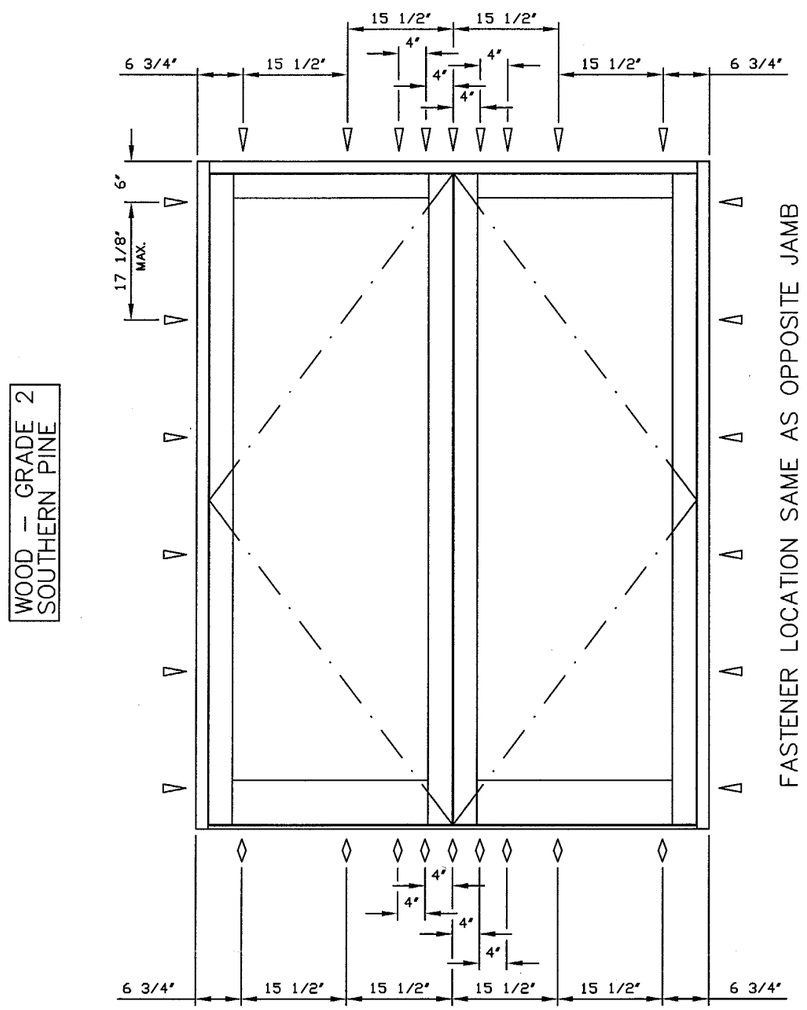

NOTE:
SEE CORRESPONDING SEPARATE NOA FOR FRAME AND PERIMETER ANCHORS OTHER THAN TRIFAB.

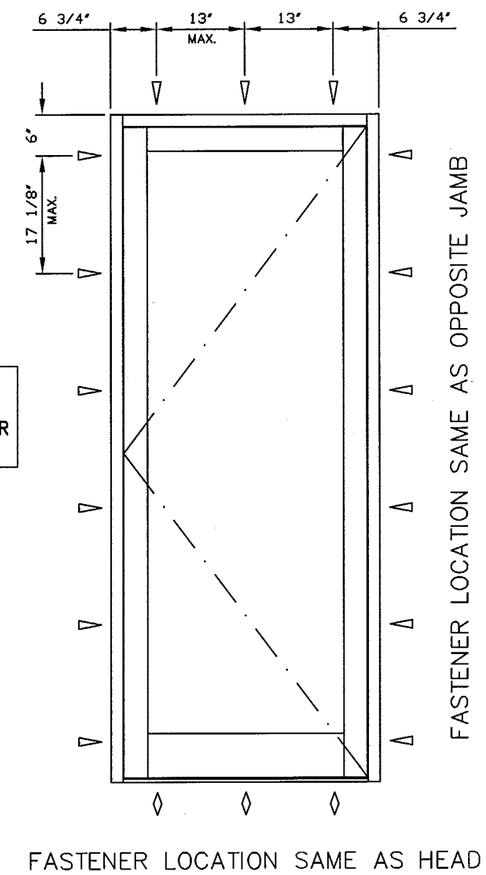

PERIMETER FASTENER LOCATIONS

PUNCHED OPENINGS – TRIFAB FRAME/WOOD SUBSTRATE

FASTENER SCHEDULE

	NUMBER	MATERIAL	DESCRIPTION	SUBSTRATE	LOCATION	MIN. EMBED.	MAX. SPACING
◊	–	STAINLESS STEEL OR CORROSION RESISTANT STEEL	#12 X 3-1/2" FLAT HEAD WOOD SCREW (ALT: EQUIV. SHEET METAL SCREW)	WOOD	THRESHOLD	1-1/2"	SEE ABOVE
▽	–	STAINLESS STEEL OR CORROSION RESISTANT STEEL	#12 X 3-1/2" FLAT HEAD WOOD SCREW (ALT: EQUIV. SHEET METAL SCREW)	WOOD	JAMB / HEADER	1-1/2"	SEE ABOVE

E. C. NO.	REV.	DATE	DESCRIPTION OF REVISION	BY
–	2	01-29-03	REVISED PER DADE COUNTY REVIEW	JME
–	1	01-16-03	REVISED PER DADE COUNTY REVIEW	PTT
–	–	05-16-02	INITIAL SUBMITTAL	JME

Approved as complying with the Florida Buiding Code
Date FEB 27, 2003
NOA# 02-0523.05
Miami Dade Product Control Division
By Ishaq I. Chanda

Kawneer
An Alcoa Company
Product Engineering & Development
555 GUTHRIDGE COURT
NORCROSS, GEORGIA 30092
PHONE (770) 449-5555
FAX (770) 734-1560

THIS DRAWING IS FOR DADE COUNTY PRODUCT APPROVAL ONLY

PRODUCT APPROVAL DRAWINGS
KAWNEER 350 DOORS - IMPACT
PANIC EXIT DEVICES
9/16" LAMINATED GLASS
PROTOCOLS PA 201/202/203

DRAWN BY JME
DATE 05/08/02
DRWG. NO. T233-951
SHEET 5 of 12
T233-951-5.DWG

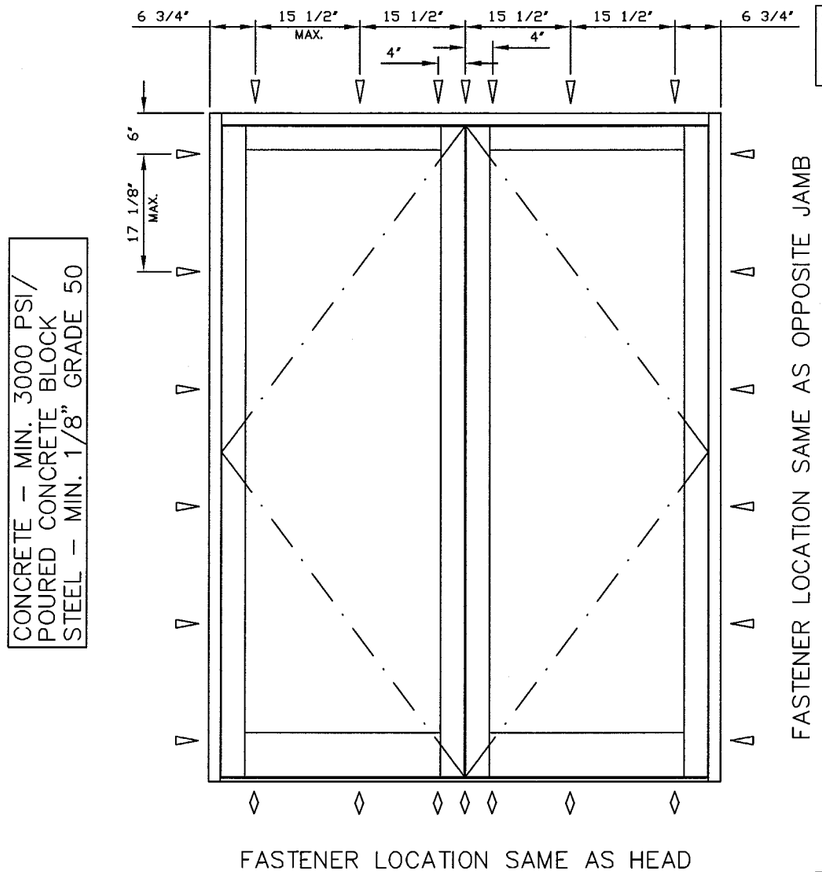

CONCRETE – MIN. 3000 PSI/
POURED CONCRETE BLOCK
STEEL – MIN. 1/8" GRADE 50

CONCRETE – MIN. 3000 PSI/
POURED CONCRETE BLOCK
STEEL – MIN. 1/8" GRADE 50

NOTE:
SEE CORRESPONDING SEPARATE NOA FOR FRAME AND PERIMETER ANCHORS OTHER THAN TRIFAB.

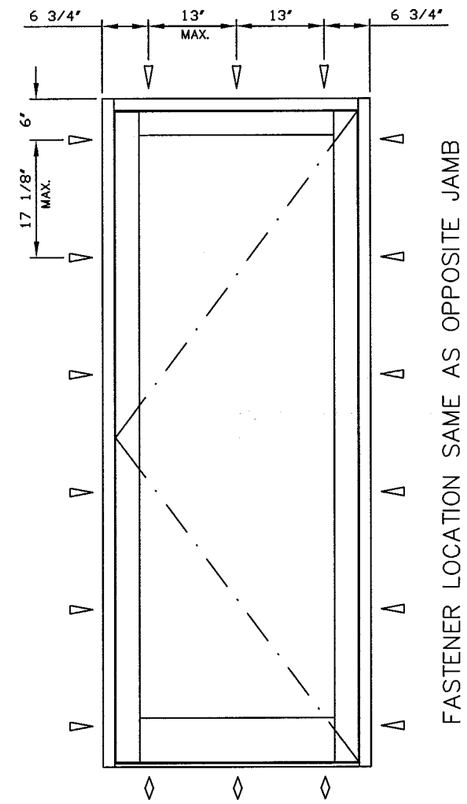

CONCRETE – MIN. 3000 PSI/
POURED CONCRETE BLOCK
STEEL – MIN. 1/8" GRADE 50

CONCRETE – MIN. 3000 PSI/
POURED CONCRETE BLOCK
STEEL – MIN. 1/8" GRADE 50

PERIMETER FASTENER LOCATIONS

PUNCHED OPENINGS – TRIFAB FRAME/CONCRETE/CBS/STEEL SUBSTRATES

FASTENER SCHEDULE

	NUMBER	MATERIAL	DESCRIPTION	SUBSTRATE	LOCATION	MIN. EMBED.	MAX. SPACING
◊	ELF420	–	1/4" x 2-1/4" PHILLIPS FLAT HEAD TAPCON BY ELCO	CONCRETE/CBS	THRESHOLD	1-1/2"	SEE ABOVE
◊	–	STAINLESS STEEL OR CORROSION RESISTANT STEEL	1/4 – 20 FLAT HEAD THREAD CUTTING SCREW	STEEL	THRESHOLD	1/8"	SEE ABOVE
▽	ELF450	–	1/4" x 3-3/4" PHILLIPS FLAT HEAD TAPCON BY ELCO	CONCRETE/CBS	JAMB / HEADER	1-1/2"	SEE ABOVE
▽	–	STAINLESS STEEL OR CORROSION RESISTANT STEEL	1/4 – 20 FLAT HEAD THREAD CUTTING SCREW	STEEL	JAMB / HEADER	1/8"	SEE ABOVE

E. C. NO.	REV.	DATE	DESCRIPTION OF REVISION	BY
–	2	01-29-03	REVISED PER DADE COUNTY REVIEW	JME
–	1	01-16-03	REVISED PER DADE COUNTY REVIEW	PTT
–	–	05-16-02	INITIAL SUBMITTAL	JME

Approved as complying with the Florida Buiding Code
Date FEB 27, 2003
NOA# 02-0523.05
Miami Dade Product Control Division
By Ishaq I. Chanda

Kawneer
An Alcoa Company
Product Engineering & Development
555 GUTHRIDGE COURT
NORCROSS, GEORGIA 30092
PHONE (770) 449-5555
FAX (770) 734-1560

THIS DRAWING IS FOR DADE COUNTY PRODUCT APPROVAL ONLY

PRODUCT APPROVAL DRAWINGS
KAWNEER 350 DOORS - IMPACT
PANIC EXIT DEVICES
9/16" LAMINATED GLASS
PROTOCOLS PA 201/202/203

DRAWN BY: JME
DATE: 05/08/02
DRWG. NO.: T233-951
SHEET: 6 of 12
T233-951-6.DWG

HARDWARE SCHEDULE FOR PAIRS OF DOORS

JACKSON 2086 EXIT DEVICE

DOOR TYPE: 350 IR S/A OFFSET PIVOT PAIR		SIZE: 6'-0" X 8'-0"		
HARDWARE DESCRIPTION	PART NUMBER	FINISH	QTY	SHIP LOOSE
CLOSER OPTIONAL	-	X	-	X
TOP OFFSET PIVOT	50-322	X	2	X
INTERMEDIATE OFFSET PIVOT	50-331	X	2	X
BOTTOM OFFSET PIVOT RH	50-326	X	1	X
BOTTOM OFFSET PIVOT LH	50-327	X	1	X
JACKSON 2086 PANIC RH	133-280	X	1	X
JACKSON 2086 PANIC LH	133-281	X	1	X
2086 PANIC ROD ASSEMBLY	133-282	X	2	X
2066 PANIC ROD EXTENSION	133-285	X	2	X
CYLINDER	35-001	X	1	X
THRESHOLD	69-139	10	1	●
BOTTOM RAIL DOOR SWEEP	200-795	X	2	●

DOOR TYPE: 350 IR S/A BUTT HUNG PAIR		SIZE: 6'-0" X 8'-0"		
HARDWARE DESCRIPTION	PART NUMBER	FINISH	QTY	SHIP LOOSE
CLOSER OPTIONAL	-	X	-	X
4 1/2" x 4" BUTT HINGE	37-232	X	6	X
JACKSON 2086 PANIC RH	133-280	X	1	X
JACKSON 2086 PANIC LH	133-281	X	1	X
2086 PANIC ROD ASSEMBLY	133-282	X	2	X
2086 PANIC ROD EXTENSION	133-285	X	2	X
CYLINDER	35-001	X	1	X
THRESHOLD	69-139	10	1	●
BOTTOM RAIL DOOR SWEEP	200-795	X	2	●

DOOR TYPE: 350 IR S/A CONTINUOUS HINGE PAIR		SIZE: 6'-0" X 8'-0"		
HARDWARE DESCRIPTION	PART NUMBER	FINISH	QTY	SHIP LOOSE
CLOSER OPTIONAL	-	X	-	X
CONTINUOUS HINGE	50-821	X	2	X
JACKSON 2086 PANIC RH	133-280	X	1	X
JACKSON 2086 PANIC LH	133-281	X	1	X
2086 PANIC ROD ASSEMBLY	133-282	X	2	X
2086 PANIC ROD EXTENSION	133-285	X	2	X
CYLINDER	35-001	X	1	X
THRESHOLD	69-139	10	1	●
BOTTOM RAIL DOOR SWEEP	200-795	X	2	●

PANELINE EXIT DEVICE

DOOR TYPE: 350 IR S/A OFFSET PIVOT PAIR		SIZE: 6'-0" X 8'-0"		
HARDWARE DESCRIPTION	PART NUMBER	FINISH	QTY	SHIP LOOSE
CLOSER OPTIONAL	-	X	-	X
TOP OFFSET PIVOT	50-322	X	2	X
INTERMEDIATE OFFSET PIVOT	50-331	X	2	X
BOTTOM OFFSET PIVOT RH	50-326	X	1	X
BOTTOM OFFSET PIVOT LH	50-327	X	1	X
PANELINE PANIC RH	233-688	X	1	X
PANELINE PANIC LH	233-689	X	1	X
DOM HURRICANE TOP STRIKE	33-500	X	2	X
DOM HURRICANE TOP LATCH	33-502	X	2	X
DOM HURRICANE HEX BOT BOLT	33-503	X	2	X
DOM BOTTOM BOLT GUIDE	33-504	X	2	X
CYLINDER	37-172	X	1	X
THRESHOLD	69-139	10	1	●
BOTTOM RAIL DOOR SWEEP	200-795	X	2	●

DOOR TYPE: 350 IR S/A BUTT HUNG PAIR		SIZE: 6'-0" X 8'-0"		
HARDWARE DESCRIPTION	PART NUMBER	FINISH	QTY.	SHIP LOOSE
CLOSER OPTIONAL	-	X	-	X
4 1/2" x 4" BUTT HINGE	37-232	X	6	X
PANELINE PANIC RH	233-688	X	1	X
PANELINE PANIC LH	233-689	X	1	X
DOM HURRICANE TOP STRIKE	33-500	X	2	X
DOM HURRICANE TOP LATCH	33-502	X	2	X
DOM HURRICANE HEX BOT BOLT	33-503	X	2	X
DOM BOTTOM BOLT GUIDE	33-504	X	2	X
CYLINDER	37-172	X	1	X
THRESHOLD	69-139	10	1	●
BOTTOM RAIL DOOR SWEEP	200-795	X	2	●

DOOR TYPE: 350 IR S/A CONTINUOUS HINGE PAIR		SIZE: 6'-0" X 8'-0"		
HARDWARE DESCRIPTION	PART NUMBER	FINISH	QTY	SHIP LOOSE
CLOSER OPTIONAL	-	X	-	X
CONTINUOUS HINGE	50-821	X	2	X
PANELINE PANIC RH	233-688	X	1	X
PANELINE PANIC LH	233-689	X	1	X
DOM HURRICANE TOP STRIKE	33-500	X	2	X
DOM HURRICANE TOP LATCH	33-502	X	2	X
DOM HURRICANE HEX BOT BOLT	33-503	X	2	X
DOM BOTTOM BOLT GUIDE	33-504	X	2	X
CYLINDER	37-172	X	1	X
THRESHOLD	69-139	10	1	●
BOTTOM RAIL DOOR SWEEP	200-795	X	2	●

HARDWARE SCHEDULE FOR SINGLE DOORS

JACKSON 2086 EXIT DEVICE

DOOR TYPE: 350 IR S/A OFFSET PIVOT SINGLE		SIZE: 3'-0" X 8'-0"		
HARDWARE DESCRIPTION	PART NUMBER	FINISH	QTY	SHIP LOOSE
CLOSER OPTIONAL	-	X	-	X
TOP OFFSET PIVOT	50-322	X	1	X
INTERMEDIATE OFFSET PIVOT	50-331	X	1	X
BOTTOM OFFSET PIVOT RH/LH	50-326/327	X	1	X
JACKSON 2086 PANIC RH/LH	133-280/281	X	1	X
2086 PANIC ROD ASSEMBLY	133-282	X	1	X
2086 PANIC ROD EXTENSION	133-285	X	1	X
CYLINDER	35-001	X	1	X
THRESHOLD	69-139	10	1	●
BOTTOM RAIL DOOR SWEEP	200-795	X	1	●

DOOR TYPE: 350 IR S/A BUTT HUNG SINGLE		SIZE: 3'-0" X 8'-0"		
HARDWARE DESCRIPTION	PART NUMBER	FINISH	QTY	SHIP LOOSE
CLOSER OPTIONAL	-	X	-	X
4 1/2" x 4" BUTT HINGE	37-232	X	3	X
JACKSON 2086 PANIC RH/LH	133-280/281	X	1	X
2086 PANIC ROD ASSEMBLY	133-282	X	1	X
2086 PANIC ROD EXTENSION	133-285	X	1	X
CYLINDER	35-001	X	1	X
THRESHOLD	69-139	10	1	●
BOTTOM RAIL DOOR SWEEP	200-795	X	1	●

DOOR TYPE: 350 IR S/A CONTINUOUS HINGE SINGLE		SIZE: 3'-0" X 8'-0"		
HARDWARE DESCRIPTION	PART NUMBER	FINISH	QTY	SHIP LOOSE
CLOSER OPTIONAL	-	X	-	X
CONTINUOUS HINGE	50-821	X	1	X
JACKSON 2086 PANIC RH/LH	133-280/281	X	1	X
2086 PANIC ROD ASSEMBLY	133-282	X	1	X
2086 PANIC ROD EXTENSION	133-285	X	1	X
CYLINDER	35-001	X	1	X
THRESHOLD	69-139	10	1	●
BOTTOM RAIL DOOR SWEEP	200-795	X	1	●

PANELINE EXIT DEVICE

DOOR TYPE: 350 IR S/A OFFSET PIVOT SINGLE		SIZE: 3'-0" X 8'-0"		
HARDWARE DESCRIPTION	PART NUMBER	FINISH	QTY	SHIP LOOSE
CLOSER OPTIONAL	-	X	-	X
TOP OFFSET PIVOT	50-322	X	1	X
INTERMEDIATE OFFSET PIVOT	50-331	X	1	X
BOTTOM OFFSET PIVOT RH/LH	50-326/327	X	1	X
PANELINE PANIC RH/LH	233-688/289	X	1	X
DOM HURRICANE TOP STRIKE	33-500	X	1	X
DOM HURRICANE TOP LATCH	33-502	X	1	X
DOM HURRICANE HEX BOT BOLT	33-503	X	1	X
DOM BOTTOM BOLT GUIDE	33-504	X	1	X
CYLINDER	37-172	X	1	X
THRESHOLD	69-139	10	1	●
BOTTOM RAIL DOOR SWEEP	200-795	X	1	●

DOOR TYPE: 350 IR S/A BUTT HUNG SINGLE		SIZE: 3'-0" X 8'-0"		
HARDWARE DESCRIPTION	PART NUMBER	FINISH	QTY	SHIP LOOSE
CLOSER OPTIONAL	-	X	-	X
4 1/2" x 4" BUTT HINGE	37-232	X	3	X
PANELINE PANIC RH/LH	233-688/689	X	1	X
DOM HURRICANE TOP STRIKE	33-500	X	1	X
DOM HURRICANE TOP LATCH	33-502	X	1	X
DOM HURRICANE HEX BOT BOLT	33-503	X	1	X
DOM BOTTOM BOLT GUIDE	33-504	X	1	X
CYLINDER	37-172	X	1	X
THRESHOLD	69-139	10	1	●
BOTTOM RAIL DOOR SWEEP	200-795	X	1	●

DOOR TYPE: 350 IR S/A CONTINUOUS HINGE SINGLE		SIZE: 3'-0" X 8'-0"		
HARDWARE DESCRIPTION	PART NUMBER	FINISH	QTY	SHIP LOOSE
CLOSER OPTIONAL	-	X	-	X
CONTINUOUS HINGE	50-821	X	1	X
PANELINE PANIC RH/LH	233-688/689	X	1	X
DOM HURRICANE TOP STRIKE	33-500	X	1	X
DOM HURRICANE TOP LATCH	33-502	X	1	X
DOM HURRICANE HEX BOT BOLT	33-503	X	1	X
DOM BOTTOM BOLT GUIDE	33-504	X	1	X
CYLINDER	37-172	X	1	X
THRESHOLD	69-139	10	1	●
BOTTOM RAIL DOOR SWEEP	200-795	X	1	●

MATERIALS LIST

#	PT. NO.	DESCRIPTION	DIMENSIONS	MATERIAL	MANUFACTURER
1	27-078	DOOR BULB WEATHERING	.125 SPACE	ALCRYN	ASTRO PLASTICS
2	27-342	DOOR SETTING BLOCK	.188 x .563 x 4.125	NEOPRENE OR EPT	KAWNEER RUBBER & PLASTICS
3	27-563	FIXED DOOR GASKET	.188 SPACE	EPDM	KAWNEER RUBBER & PLASTICS
4	28-315	DOOR BOTTOM RAIL SWEEP ATTACHMENT SCREW	#6 x 3/8" FHTFS	400 SERIES STAINLESS STEEL	VARIES
5	28-350	O.P. TO JAMB ATTACHMENT SCREW	12-24 x 5/8" FHMS	ZINC PLATED CARBON STEEL	VARIES
6	28-400	SHEAR BLOCK TO JAMB ATTACHMENT SCREW	#10 x 1-19/32" PHTFS	430 SERIES STAINLESS STEEL	VARIES
7	28-845	THRESHOLD CLIP ATTACHMENT SCREW	12-24 x 3/8" FHMS	ZINC PLATED CARBON STEEL	VARIES
8	33-105	PANELINE PUSH PANEL	7.125 x 1.188 x .094	6063-T6 ALUMINUM	KAWNEER
9	49-896	TRIFAB THRESHOLD/JAMB CLIP	1.312 x 1.688 x 1.500	1010-1020 H.R. STEEL	EVANS TOOL AND DIE
10	69-139	THRESHOLD	.500 x 4.000 x .125	6063-T6 ALUMINUM	KAWNEER
11	127-041	GLAZING TAPE / SILICONE SPACER	.375 SPACE	SEMI-RIGID POLYURETHANE FOAM	NORTON (V2212)
12	128-345	HEADER TO SHEAR BLOCK ATTACHMENT SCREW	#10 x 9/16" FHTFS	430 SERIES STAINLESS STEEL	VARIES
13	128-439	DOOR ADJUSTABLE ASTRAGAL ATTACHMENT SCREW	#6 x 11/16" FH	ZINC PLATED CARBON STEEL	VARIES
14	128-910	DOOR GLASS STOP ATTACHMENT SCREW	#10 x 1/2" FHTFS	300 SERIES STAINLESS STEEL	VARIES
15	200-005	DOOR STILE	3.500 x 1.750 x .125	6063-T6 ALUMINUM	KAWNEER
16	200-006	ACTIVE DOOR MEETING STILE	3.500 x 1.750 x .125	6063-T6 ALUMINUM	KAWNEER
17	200-007	INACTIVE DOOR MEETING STILE	3.562 x 1.750 x .125	6063-T6 ALUMINUM	KAWNEER
18	200-012	CONTINUOUS HINGE DOOR STILE	3.281 x 1.750 x .125	6063-T6 ALUMINUM	KAWNEER
19	200-023	DOOR TOP RAIL	3.500 x 1.724 x .125	6063-T6 ALUMINUM	KAWNEER
20	200-032	DOOR BOTTOM RAIL	6.500 x 1.724 x .125	6063-T6 ALUMINUM	KAWNEER
21	200-497	ADJUSTABLE ASTRAGAL WEATHERING ASSY.	--	VARIED	KAWNEER
22	200-795	DOOR BOTTOM RAIL WEATHER SWEEP ASSY.	--	VARIED	KAWNEER
23	233-013	PANELINE CROSS RAIL	6.250 x 1.724 x .125	6063-T6 ALUMINUM	KAWNEER
24	450-018	TRIFAB DOOR JAMB W/DOOR STOP	1.750 x 4.500 x .080	6063-T6 ALUMINUM	KAWNEER
25	450-020	TRIFAB TRANSOM BAR W/DOOR STOP	1.750 x 4.452 x .125	6063-T6 ALUMINUM	KAWNEER
26	450-023	TRIFAB TRANSOM BAR SHEAR BLOCK	.718 x 4.150 x .125 x 1.250	6063-T6 ALUMINUM	KAWNEER
27	575-043	EXTERIOR DOOR GLASS STOP	1.356 x .351 x .070	6063-T6 ALUMINUM	KAWNEER
28	575-045	INTERIOR DOOR GLASS STOP	1.354 x 1.359 x .186	6063-T6 ALUMINUM	KAWNEER

ALL DIMENSIONS ARE INCHES

NOTES:

FOR ADDITIONAL INFORAMTION ON PANICS SEE SHEET 12.

200-795 BOTTOM DOOR WEATHERING: 27-406 SWEEP GASKET EXTRUSION
27-407 SWEEP GASKET FILLER
27-309 SWEEP GASKET

DOOR CORNER CONSTRUCTION

VERTICAL STILES RUN THROUGH AND ARE ATTACHED TO THE TOP AND BOTTOM RAILS WITH 1/4" THICK EXTRUDED ALUMINUM CHANNELS, 1/4-20 x 3/4" PAN HEAD MACHINE SCREWS, AND 3/16" THICK STEEL NUT PLATES. THE INTERSECTION OF EACH CORNER JOINT IS WELDED WITH A 1/2" DIAMETER PLUG WELD AND A 1-1/8" LONG FILLET WELD AT BOTH WEBS OF EACH RAIL.

E. C. NO.	REV.	DATE	DESCRIPTION OF REVISION	BY
-	2	01-29-03	REVISED PER DADE COUNTY REVIEW	JME
-	1	01-16-03	REVISED PER DADE COUNTY REVIEW	PTT
-	-	05-16-02	INITIAL SUBMITTAL	JME

Approved as complying with the Florida Buiding Code
Date FEB 27, 2003
NOA# 02-0523.05
Miami Dade Product Control Division
By Ishaq I. Chanda

Kawneer
An Alcoa Company
Product Engineering & Development
555 GUTHRIDGE COURT
NORCROSS, GEORGIA 30092
PHONE (770) 449-5555
FAX (770) 734-1560

THIS DRAWING IS FOR DADE COUNTY PRODUCT APPROVAL ONLY

PRODUCT APPROVAL DRAWINGS
KAWNEER 350 DOORS - IMPACT
PANIC EXIT DEVICES
9/16" LAMINATED GLASS
PROTOCOLS PA 201/202/203

DRAWN BY JME	DATE 05/08/02
DRWG. NO. T233-951	
SHEET 7 of 12	T233-951-07.DWG

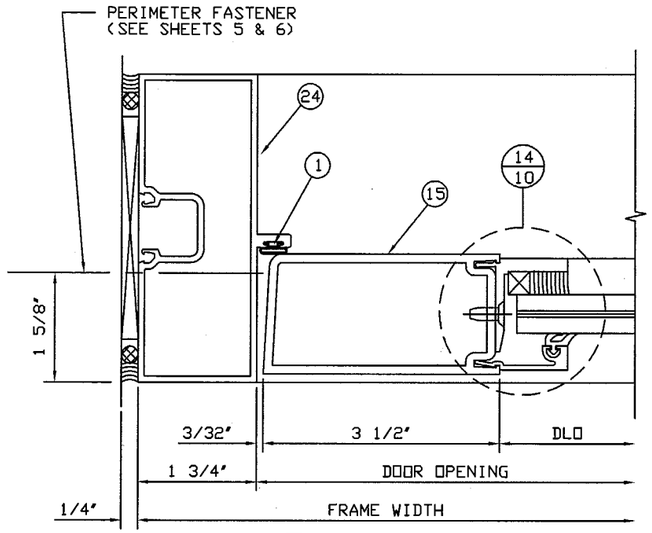

1/8 JAMB DETAIL

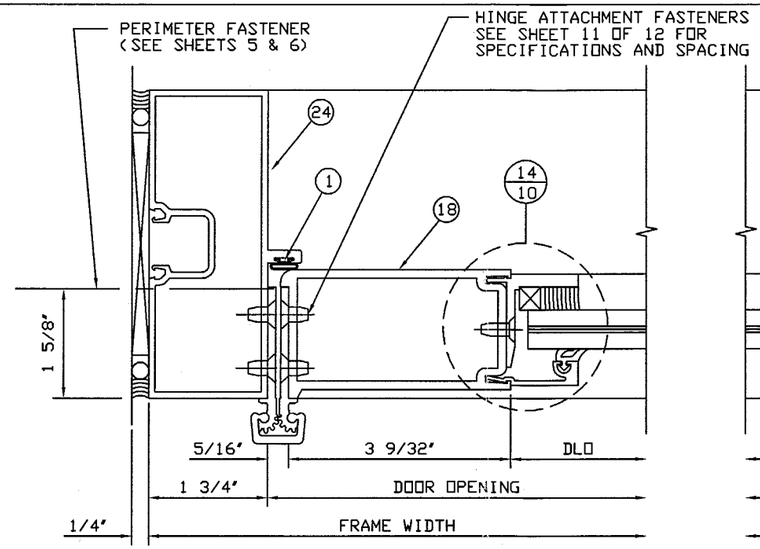

2/8 JAMB DETAIL

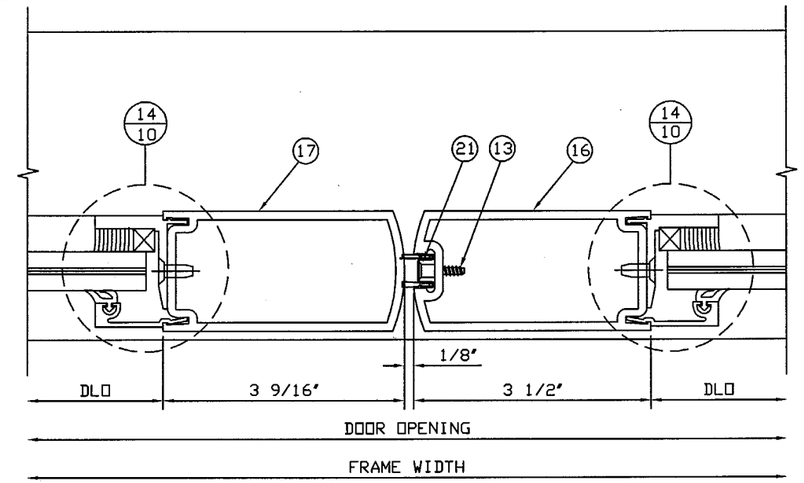

3/8 MEETING STILES

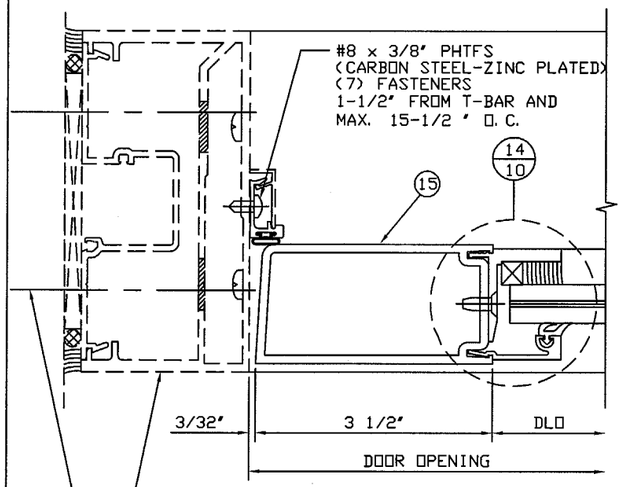

4/8 JAMB DETAIL

PERIMETER FASTENER AND FRAME
UNDER SEPARATE APPROVAL.
SEE KAWNEER STOREFRONT NOA.

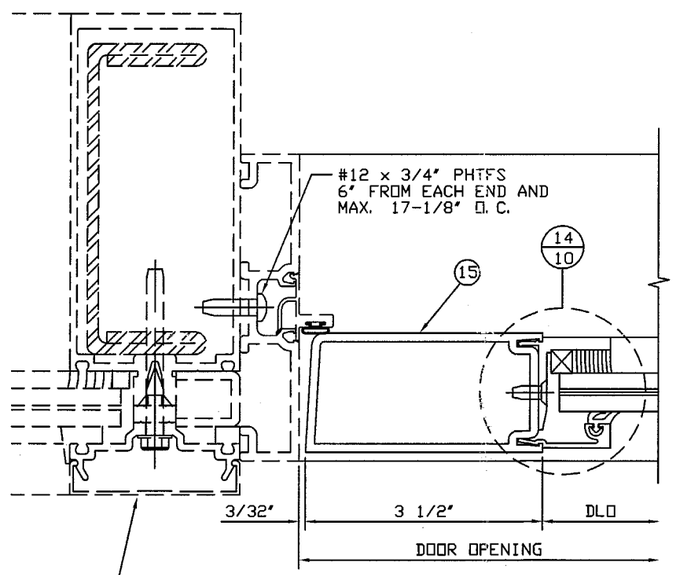

5/8 JAMB DETAIL

CURTAIN WALL AND SUB FRAME
UNDER SEPARATE APPROVAL.
SEE KAWNEER CURTAIN WALL NOA.

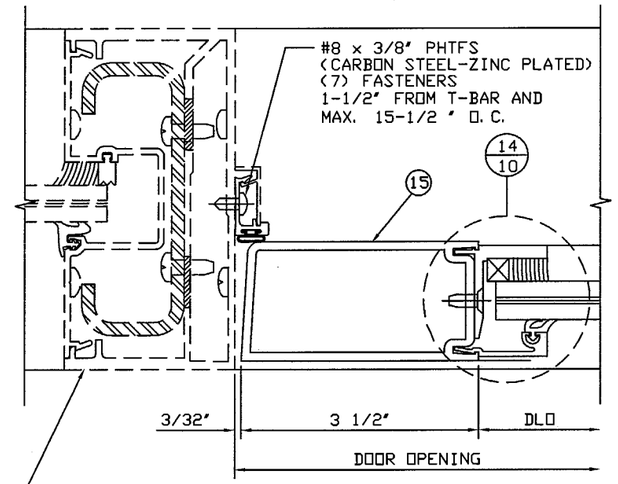

6/8 DOOR AT SIDELITE

STOREFRONT FRAME UNDER
SEPARATE APPROVAL. SEE
KAWNEER STOREFRONT NOA.

E. C. NO.	REV.	DATE	DESCRIPTION OF REVISION	BY
-	2	01-29-03	REVISED PER DADE COUNTY REVIEW	JME
-	1	01-16-03	REVISED PER DADE COUNTY REVIEW	PTT
-	-	05-16-02	INITIAL SUBMITTAL	JME

Approved as complying with the
Florida Building Code
Date FEB 27 2003
NOA# 02-0523.05
Miami Dade Product Control
Division
By Shaz I. Chands

Kawneer
An Alcoa Company
Product Engineering & Development
555 GUTHRIDGE COURT
NORCROSS, GEORGIA 30092
PHONE (770) 449-5555
FAX (770) 734-1560

THIS DRAWING IS FOR
DADE COUNTY
PRODUCT APPROVAL
ONLY

PRODUCT APPROVAL DRAWINGS
KAWNEER 350 DOORS - IMPACT
PANIC EXIT DEVICES
9/16" LAMINATED GLASS
PROTOCOLS PA 201/202/203

DRAWN BY	DATE
PAT T.	05/08/02

DRWG. NO. T233-951

SHEET 8 of 12

T233-951-08.DWG

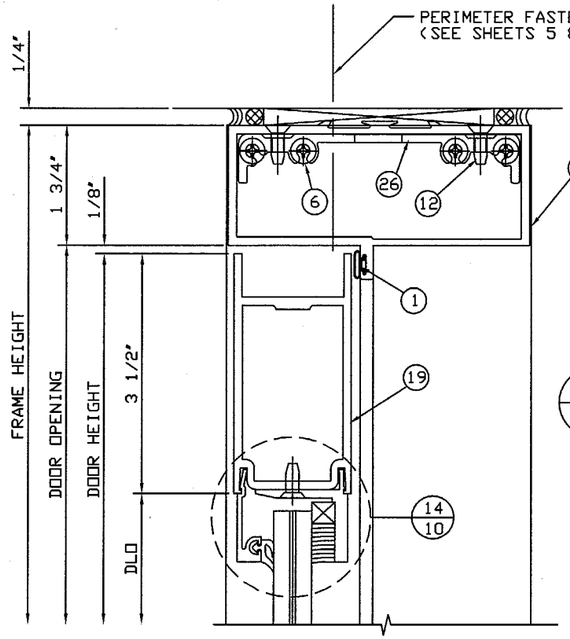

7/9 HEADER DETAIL

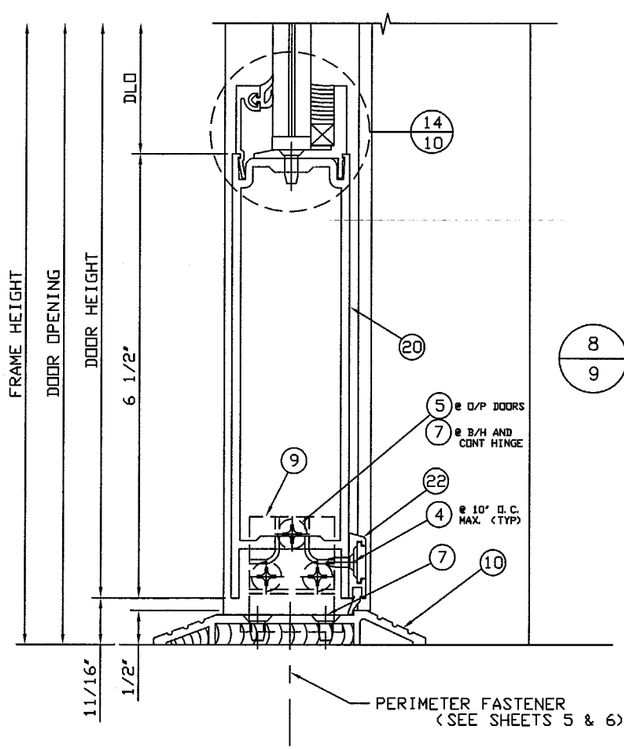

8/9 THRESHOLD DETAIL

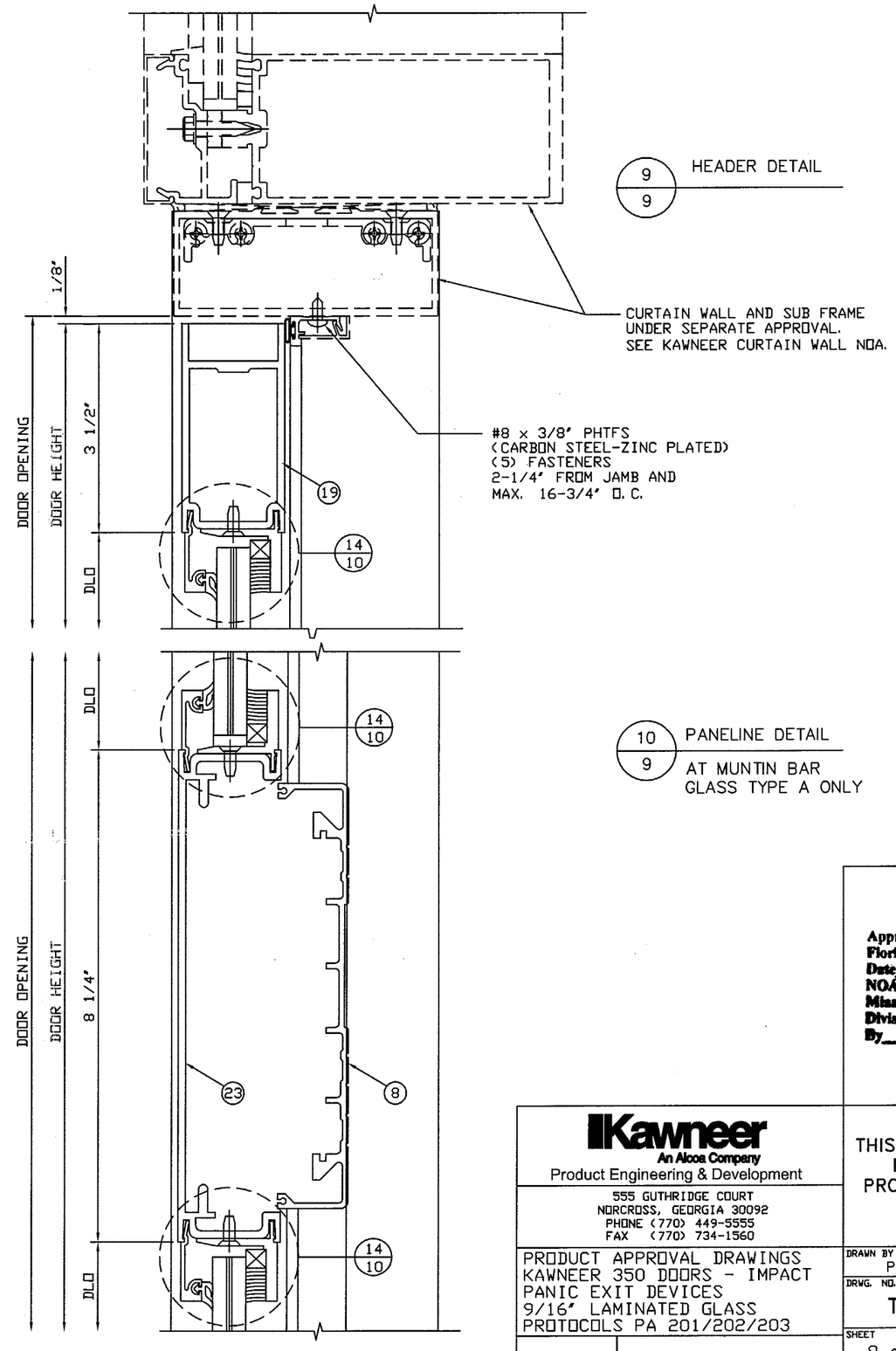

9/9 HEADER DETAIL

10/9 PANELINE DETAIL
AT MUNTIN BAR
GLASS TYPE A ONLY

E.C. NO.	REV.	DATE	DESCRIPTION OF REVISION	BY
-	.2	01-29-03	REVISED PER DADE COUNTY REVIEW	JME
-	1	01-16-03	REVISED PER DADE COUNTY REVIEW	PTT
-	-	05-16-02	INITIAL SUBMITTAL	JME

Approved as complying with the Florida Building Code
Date FEB 27, 2003
NOA# 02-0523.05
Miami Dade Product Control Division
By Ishaq I. Chanda

Kawneer
An Alcoa Company
Product Engineering & Development
555 GUTHRIDGE COURT
NORCROSS, GEORGIA 30092
PHONE (770) 449-5555
FAX (770) 734-1560

THIS DRAWING IS FOR DADE COUNTY PRODUCT APPROVAL ONLY

PRODUCT APPROVAL DRAWINGS
KAWNEER 350 DOORS - IMPACT
PANIC EXIT DEVICES
9/16" LAMINATED GLASS
PROTOCOLS PA 201/202/203

DRAWN BY	DATE
PAT T.	05/08/02

DRWG. NO. T233-951

SHEET 9 of 12

T233-951-09.DWG

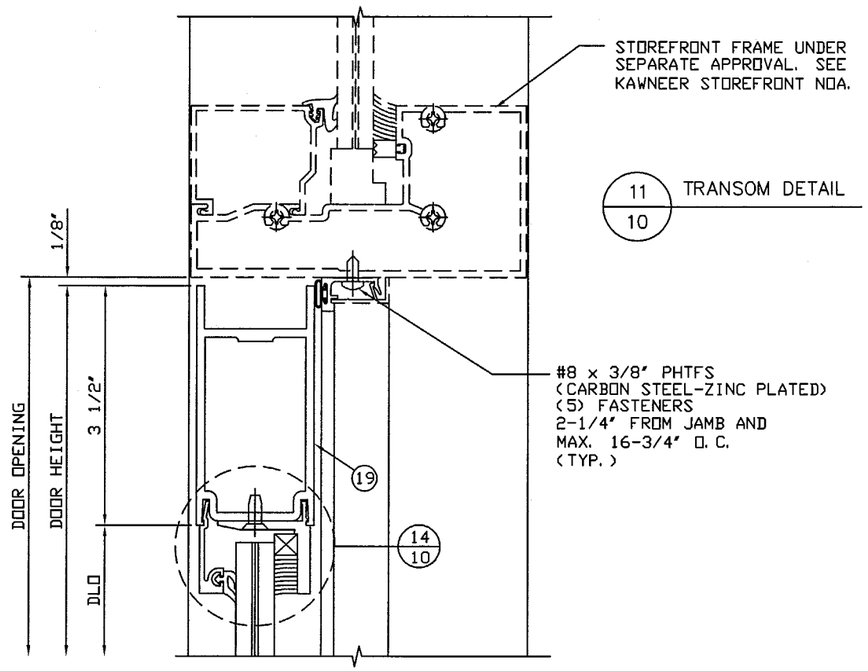

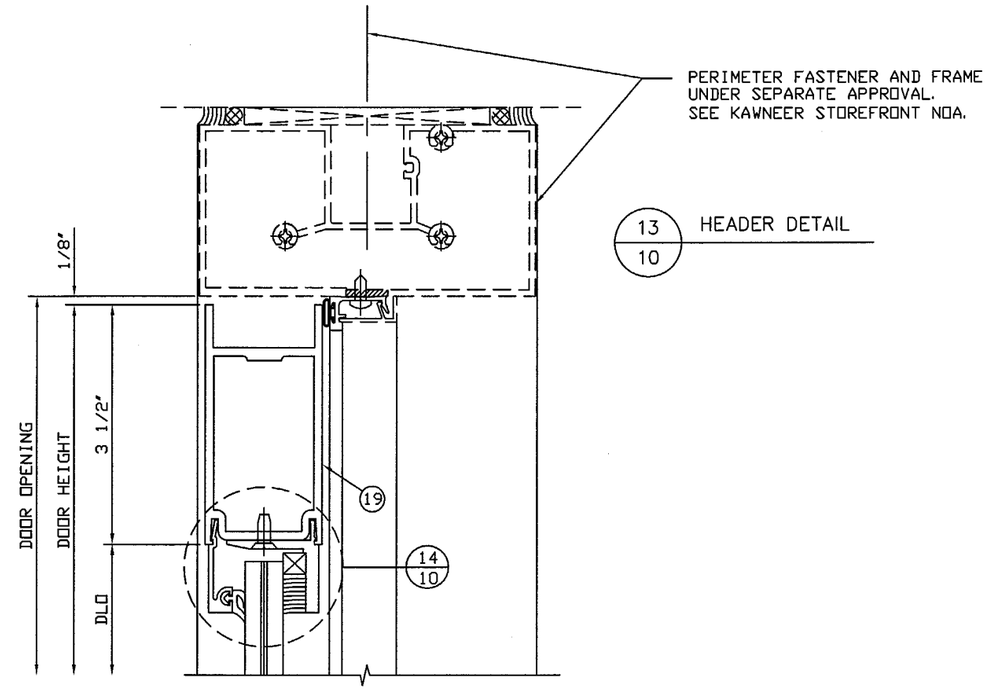

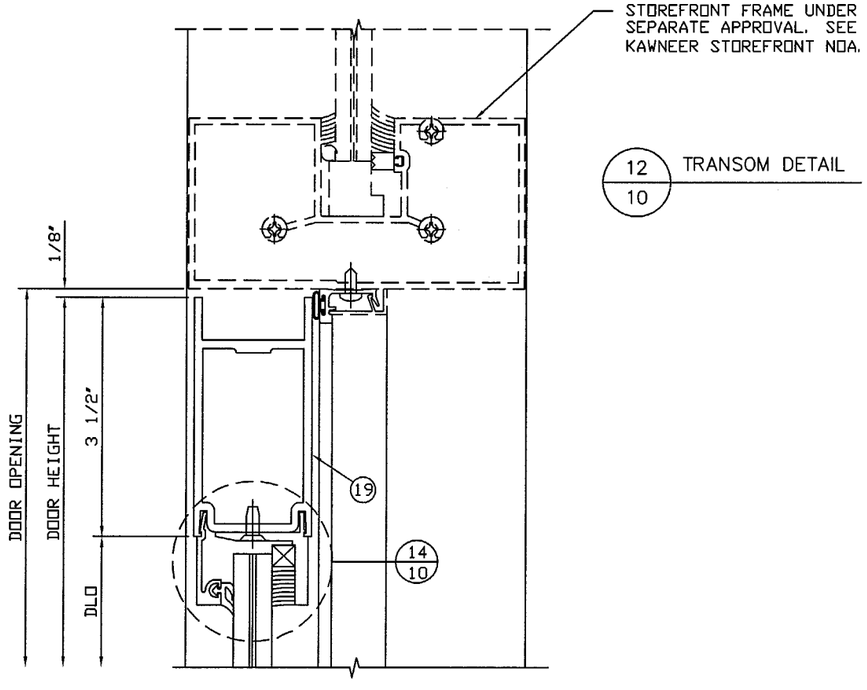

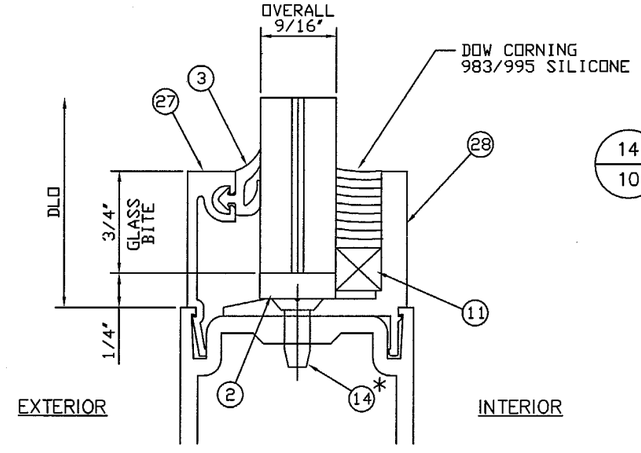

14
10
GLAZING DETAIL

9/16" LAMINATED GLASS
TYPE A OR B

* 3" FROM EACH END AND MAX. 7-1/2" O.C. @ TOP AND BOTTOM RAIL
3" FROM EACH END AND MAX. 11-1/8" O.C. @ VERTICAL STILES

E. C. NO.	REV.	DATE	DESCRIPTION OF REVISION	BY
-	2	01-29-03	REVISED PER DADE COUNTY REVIEW	JME
-	1	01-16-03	REVISED PER DADE COUNTY REVIEW	PTT
-	-	05-16-02	INITIAL SUBMITTAL	JME

Approved as complying with the Florida Building Code
Date FEB 27, 2003
NOA# 02-0522.05
Miami Dade Product Control Division
By Shaq I. Chanda

Kawneer
An Alcoa Company
Product Engineering & Development
555 GUTHRIDGE COURT
NORCROSS, GEORGIA 30092
PHONE (770) 449-5555
FAX (770) 734-1560

THIS DRAWING IS FOR DADE COUNTY PRODUCT APPROVAL ONLY

PRODUCT APPROVAL DRAWINGS
KAWNEER 350 DOORS - IMPACT
PANIC EXIT DEVICES
9/16" LAMINATED GLASS
PROTOCOLS PA 201/202/203

DRAWN BY: PAT T.
DATE: 05/08/02
DRWG. NO.: T233-951
SHEET: 10 of 12
T233-951-10.DWG

TYPICAL ASSEMBLY
TRIFAB FRAMING
OFFSET PIVOT

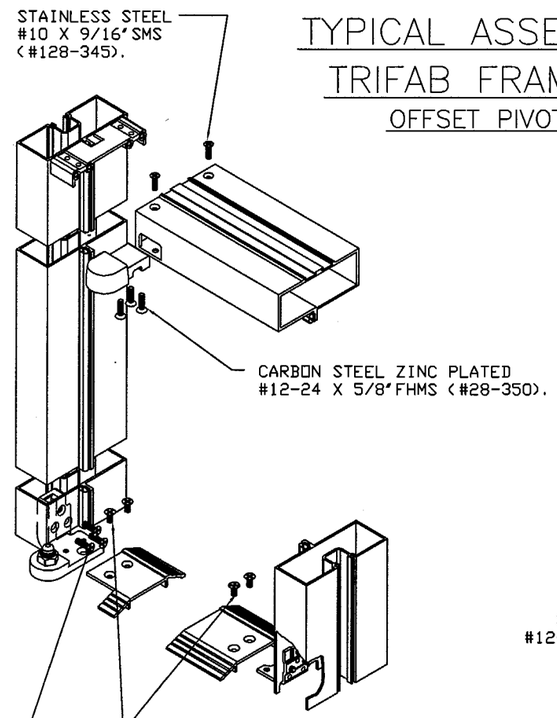

TYPICAL ASSEMBLY
TRIFAB FRAMING
BUTT HINGE
CONT. HINGE SIMILAR

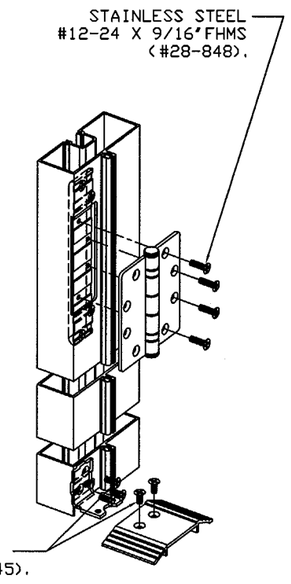

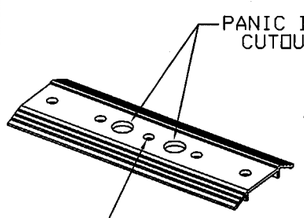

TYPICAL THRESHOLD
PANIC CUTOUT
PAIR SHOWN SINGLE DOOR SIMILAR

OFFSET PIVOTS

50-322
CAST ALUMINUM
TOP PIVOT SET

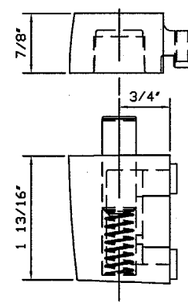

ATTACHED TO FRAME WITH
(3) CARBON STEEL ZINC PLATED
#12-24 X 5/8" FHMS (#28-350).

ATTACHED TO DOOR WITH
(2) CARBON STEEL ZINC PLATED
5/16-18 X 5/8 HHMS
(#128-352).

50-331
CAST ALUMINUM
INTERMEDIATE
PIVOT SET

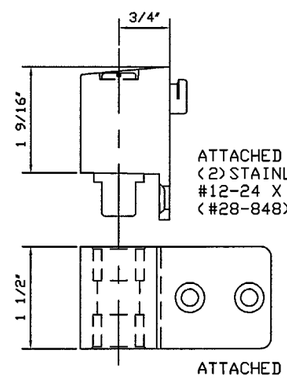

ATTACHED TO DOOR WITH
(2) STAINLESS STEEL
#12-24 X 9/16" FHMS
(#28-848).

ATTACHED TO FRAME WITH
(2) STAINLESS STEEL
#12-24 X 9/16" FHMS
(#28-848).

50-326 RH
50-327 LH
CAST ALUMINUM
TOP PIVOT SET

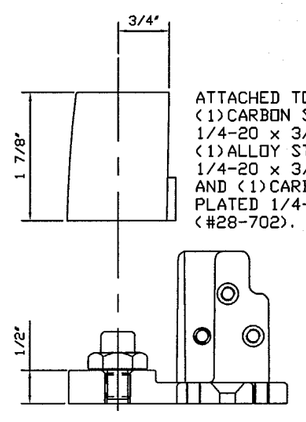

ATTACHED TO DOOR WITH
(1) CARBON STEEL ZINC PLATED
1/4-20 x 3/8" HHMS (#28-703),
(1) ALLOY STEEL ZINC PLATED
1/4-20 x 3/8" SHCS (#28-701),
AND (1) CARBON STEEL ZINC
PLATED 1/4-20 x 1/2" HHMS
(#28-702).

ATTACHED TO FRAME
WITH (3) CARBON
STEEL ZINC PLATED
#12-24 X 5/8" FHMS
(#28-350).

BUTT HINGE

37-232
STEEL HINGE WITH
BRASS PLUG AND
STAINLESS STEEL PIN.
(BY HAGER HINGE)

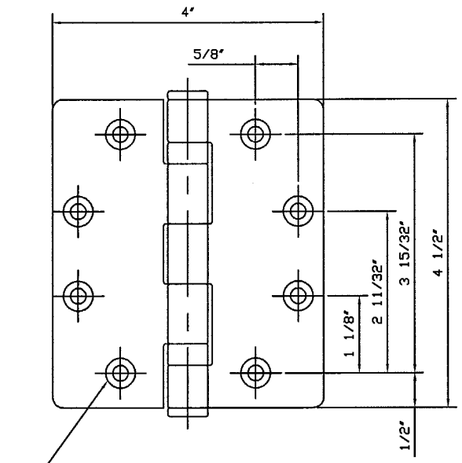

FASTENED TO HINGE STILE AND TO
FRAME WITH (4) STAINLESS STEEL
#12-24 X 9/16" FHMS (#28-848).

CONTINUOUS HINGE

50-821
6063-T6 ALUMINUM
CONTINUOUS HINGE.
(BY HAGER/ROTON).

FASTENED TO HINGE STILE AND TO FRAME WITH (26) CARBON
STEEL ZINC PLATED #12-24 X 13/32" FHTCS EACH. TWO ROWS OF
SCREWS 3/4" APART: (2) AT 1" FROM BOTTOM, (2) AT 2-9/16",
(1) AT 2-9/16", (15) STAGGERED AT 5-1/8", (2) AT 2-9/16",
(2) AT 2-9/16".

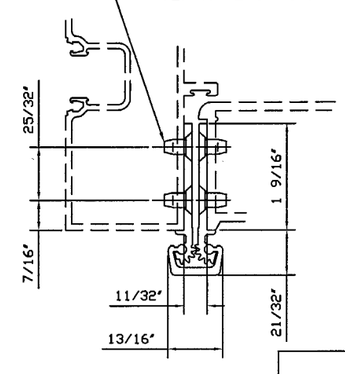

E. C. NO.	REV.	DATE	BY	DESCRIPTION OF REVISION
-	2	01-29-03	PTT	REVISE PER DADE COUNTY REVIEW
-	1	01-16-03	PTT	REVISE PER DADE COUNTY REVIEW
-	-	05-16-02	JME	INITIAL SUBMITTAL

Approved as complying with the
Florida Building Code
Date FEB 27, 2003
NOA# 02-0523.05
Miami Dade Product Control
Division
By Ishaq I. Chanda

Kawneer
An Alcoa Company
Product Engineering & Development
555 GUTHRIDGE COURT
NORCROSS, GEORGIA 30092
PHONE (770) 449-5555
FAX (770) 734-1560

THIS DRAWING IS FOR
DADE COUNTY
PRODUCT APPROVAL
ONLY

PRODUCT APPROVAL DRAWINGS
KAWNEER 350 DOORS - IMPACT
PANIC EXIT DEVICES
9/16" LAMINATED GLASS
PROTOCOLS PA 201/202/203

DRAWN BY PAT T.	DATE 05/08/02
DRWG. NO. T233-951	
SHEET 11 of 12	T233-951-11.DWG

TYPICAL JACKSON 2086 EXIT DEVICE

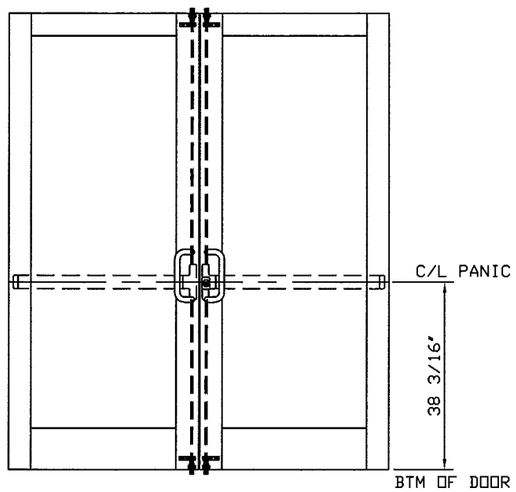

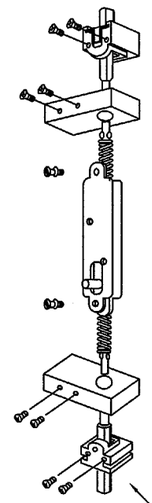

133-282 ROD ASSEMBLY WITH
133-285 ROD EXTENSION

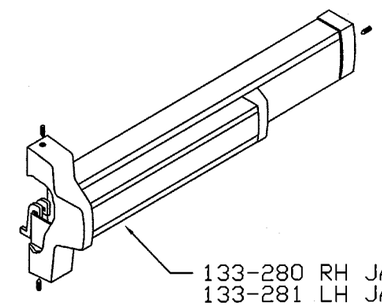

133-280 RH JACKSON 2086
133-281 LH JACKSON 2086

TYPICAL PANELINE EXIT DEVICE

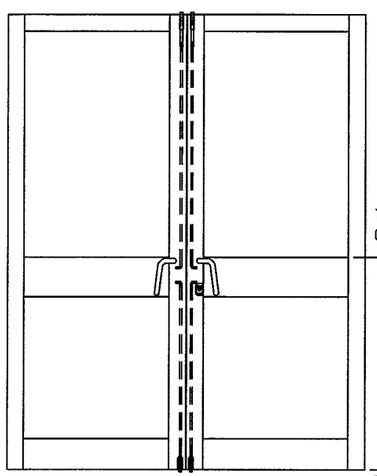

33-500
TOP STRIKE
ATTACHED TO FRAME WITH
(4) CARBON STEEL ZINC PLATED
#8 THREAD CUTTING FASTENERS.

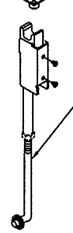

33-502
TOP LATCH

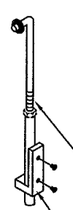

33-503
HEX BOLT ASSEMBLY

33-504
BOLT GUIDE

TRAVELER ASSEMBLY

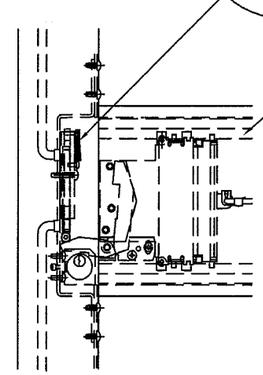

233-688 RH PANELINE
233-689 LH PANELINE

E. C. NO.	REV.	DATE	DESCRIPTION OF REVISION	BY
-	2	01-29-03	ADDED SHEET PER DADE COUNTY REVIEW	PTT
-	1	01-16-03	REVISED PER DADE COUNTY REVIEW	PTT
-	-	05-16-02	INITIAL SUBMITTAL	JME

Approved as complying with the
Florida Building Code
Date FEB 27, 2003
NOA# 02-0523.05
Miami Dade Product Control
Division
By Shaq I. Chanda

Kawneer
An Alcoa Company
Product Engineering & Development
555 GUTHRIDGE COURT
NORCROSS, GEORGIA 30092
PHONE (770) 449-5555
FAX (770) 734-1560

THIS DRAWING IS FOR DADE COUNTY PRODUCT APPROVAL ONLY

PRODUCT APPROVAL DRAWINGS
KAWNEER 350 DOORS - IMPACT
PANIC EXIT DEVICES
9/16" LAMINATED GLASS
PROTOCOLS PA 201/202/203

DRAWN BY PAT T.	DATE 01-29-03
DRWG. NO. T233-951	
SHEET 12 of 12	T233-951-12.DWG