MIAMI-DADE

BUILDING CODE COMPLIANCE OFFICE (BCCO)
PRODUCT CONTROL DIVISION

MIAMI-DADE COUNTY, FLORIDA
METRO-DADE FLAGLER BUILDING
140 WEST FLAGLER STREET, SUITE 1603
MIAMI, FLORIDA 33130-1563
(305) 375-2901 FAX (305) 375-2908

NOTICE OF ACCEPTANCE (NOA)

Andersen Corporation
100 Fourth Ave. North
Bayport, MN 55003

SCOPE:
This NOA is being issued under the applicable rules and regulations governing the use of construction materials. The documentation submitted has been reviewed by Miami-Dade County Product Control Division and accepted by the Board of Rules and Appeals (BORA) to be used in Miami Dade County and other areas where allowed by the Authority Having Jurisdiction (AHJ).

This NOA shall not be valid after the expiration date stated below. The Miami-Dade County Product Control Division (In Miami Dade County) and/or the AHJ (in areas other than Miami Dade County) reserve the right to have this product or material tested for quality assurance purposes. If this product or material fails to perform in the accepted manner, the manufacturer will incur the expense of such testing and the AHJ may immediately revoke, modify, or suspend the use of such product or material within their jurisdiction. BORA reserves the right to revoke this acceptance, if it is determined by Miami-Dade County Product Control Division that this product or material fails to meet the requirements of the applicable building code.

This product is approved as described herein, and has been designed to comply with the High Velocity Hurricane Zone of the Florida Building Code.

DESCRIPTION: Series "Perma Shield" Vinyl Clad Wood Casement Window

APPROVAL DOCUMENT: Drawing No. **W01-46,** titled " 'Perma Shield' Vinyl Clad WD. Casement Wdw.", sheets 1 through 5 of 5, prepared by Al Farooq Corporation, dated 7/23/01 with revision on 8/9/02, signed and sealed by Humayoun Farooq, P.E., bearing the Miami-Dade County Product Control Approval stamp with the Notice of Acceptance number and approval date by the Miami-Dade County Product Control Division.

MISSILE IMPACT RATING: Large and Small Missile Impact

LABELING: Each unit shall bear a permanent label with the manufacturer's name or logo, city, state and following statement: "Miami-Dade County Product Control Approved", unless otherwise noted herein.

RENEWAL of this NOA shall be considered after a renewal application has been filed and there has been no change in the applicable building code negatively affecting the performance of this product.

TERMINATION of this NOA will occur after the expiration date or if there has been a revision or change in the materials, use, and/or manufacture of the product or process. Misuse of this NOA as an endorsement of any product, for sales, advertising or any other purposes shall automatically terminate this NOA. Failure to comply with any section of this NOA shall be cause for termination and removal of NOA.

ADVERTISEMENT: The NOA number preceded by the words Miami-Dade County, Florida, and followed by the expiration date may be displayed in advertising literature. If any portion of the NOA is displayed, then it shall be done in its entirety.

INSPECTION: A copy of this entire NOA shall be provided to the user by the manufacturer or its distributors and shall be available for inspection at the job site at the request of the Building Official.
This NOA consists of this page 1 as well as approval document mentioned above.
The submitted documentation was reviewed by **Theodore Berman, P.E.**

Andersen Corporation

NOTICE OF ACCEPTANCE: EVIDENCE SUBMITTED
(For File ONLY. Not part of NOA)

A. DRAWINGS

1. Manufacturer's die drawings and sections.
2. Drawing No **W01-46,** titled " 'Perma Shield' Vinyl Clad WD. Casement Wdw.", sheets 1 through 5 of 5, prepared by Al Farooq Corporation, dated 7/23/01 with revision on 8/9/02, signed and sealed by Humayoun Farooq, P.E.

B. TESTS

1. Test reports on 1)Uniform Static Air Pressure Test, Loading per SFBC,PA 202-94
   2) Large Missile Impact Test per SFBC, PA 201-94
   3) Cyclic Wind Pressure Loading per SFBC, PA 203-94
   along with marked-up drawings and installation diagram of a vinyl clad wood casement window, prepared by Architectural Testing, Inc., Test Report No. 02-33449.01, dated 9/10/01, signed and sealed by Allen Reeves, P.E.
2. Test reports on 1) Air Infiltration Test, per SFBC, PA 202-94
   2)Uniform Static Air Pressure Test, Loading per SFBC, PA 202-94
   3) Water Resistance Test, per SFBC, PA 202-94
   4) Large Missile Impact Test per SFBC, PA 201-94
   5) Cyclic Wind Pressure Loading per SFBC, PA 203-94
   6) Forced Entry Test, per SFBC 3603.2 (b) and PA 202-94
   along with marked-up drawings and installation diagram of a vinyl clad wood casement window, prepared by Architectural Testing, Inc., Test Report No. 02-33001.01, dated 2/1/01, signed and sealed by Allen Reeves, P.E.
3. Test reports on 1) Air Infiltration Test, per SFBC, PA 202-94
   2)Uniform Static Air Pressure Test, Loading per SFBC, PA 202-94
   3) Water Resistance Test, per SFBC, PA 202-94
   4) Large Missile Impact Test per SFBC, PA 201-94
   5) Cyclic Wind Pressure Loading per SFBC, PA 203-94
   6) Forced Entry Test, per SFBC 3603.2 (b) and PA 202-94
   along with marked-up drawings and installation diagram of a vinyl clad wood casement window, prepared by Architectural Testing, Inc., Test Report No. 02-33003.01, dated 2/8/01, signed and sealed by Allen Reeves, P.E.
4. Test reports on 1) Air Infiltration Test, per SFBC, PA 202-94
   2)Uniform Static Air Pressure Test, Loading per SFBC, PA 202-94
   3) Water Resistance Test, per SFBC, PA 202-94
   4) Large Missile Impact Test per SFBC, PA 201-94
   5) Cyclic Wind Pressure Loading per SFBC, PA 203-94
   6) Forced Entry Test, per SFBC 3603.2 (b) and PA 202-94
   along with marked-up drawings and installation diagram of a vinyl clad wood casement window, prepared by Architectural Testing, Inc., Test Report No. 02-31312.01, dated 3/9/99, signed and sealed by Allen Reeves, P.E.

Theodore Berman, P.E.
Deputy Director, Product Control Division
NOA No 02-0603.01
Expiration Date: September 19, 2007
Approval Date: September 19, 2002

Andersen Corporation

NOTICE OF ACCEPTANCE: EVIDENCE SUBMITTED
(For File ONLY. Not part of NOA)

C. CALCULATIONS

1. Anchor Calculations and structural analysis, prepared by Al Farooq Corporation, dated 1/2/02, signed and sealed by Humayoun Farooq, P.E.

D. MATERIAL CERTIFICATIONS

1. Notice of Acceptance No. **97-0713.15** issued to Elco Industries for "Elco Industries Tapcon a corrosion resistant masonry and concrete fasteners finished with Stalgard coating" dated 1/8/98, expiring on 1/8/01.

E. STATEMENTS

1. Statement letter of conformance, dated 1/3/02, signed and sealed by Humayoun Farooq, P.E.
2. Statement letter of no financial interest, dated 1/3/02, signed and sealed by Humayoun Farooq, P.E.

F. OTHER

1. Letter from San Martin Associates, Inc.

Theodore Berman, P.E.
Deputy Director, Product Control Division
NOA No 02-0603.01
Expiration Date: September 19, 2007
Approval Date: September 19, 2002

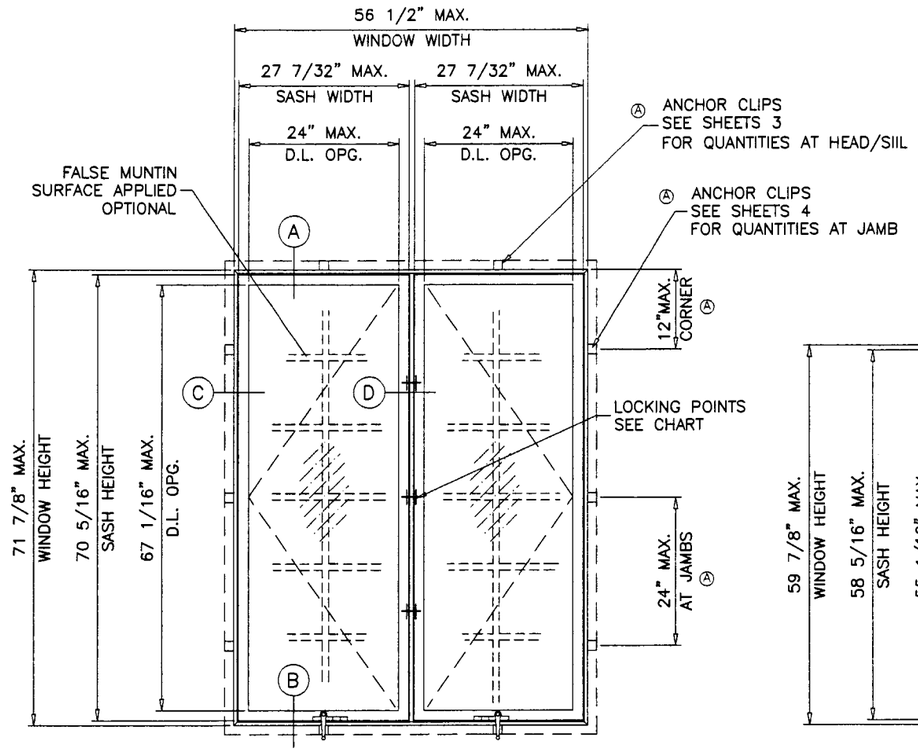

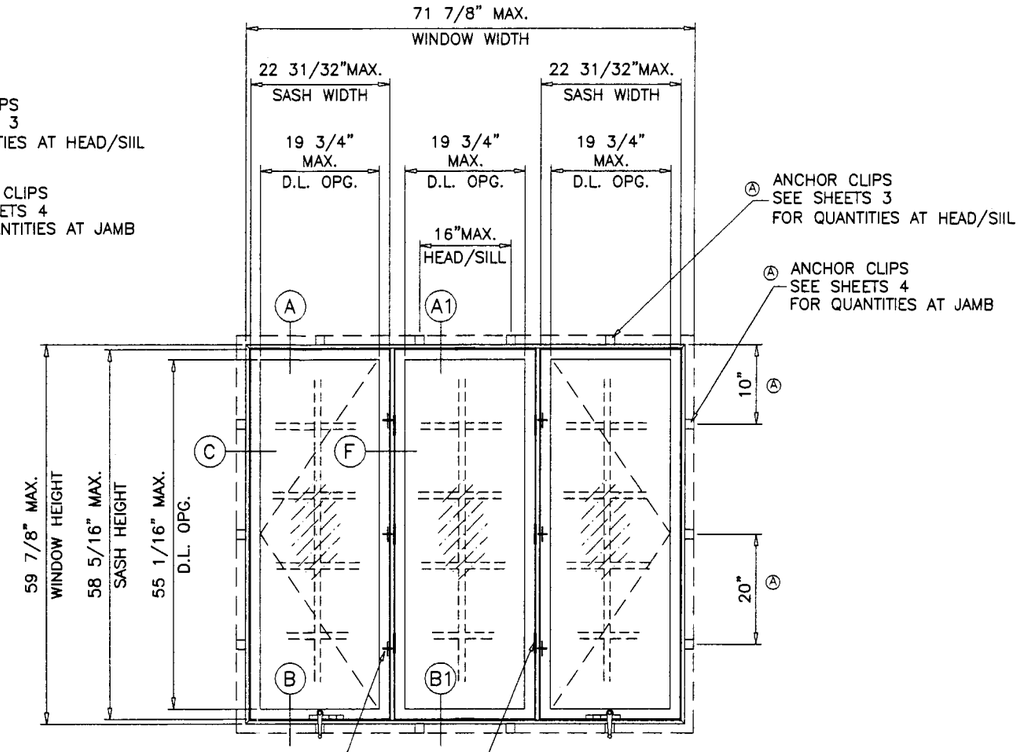

TYPICAL ELEVATIONS

TESTED UNITS

WDW. HEIGHT UPTO	NO. OF KEEPERS AT SASH	NO. OF STAT. CLIPS AT STAT. JAMB
28-3/8"	1	1
40-13/16"	2	2
59-7/8"	3	3
71-7/8"	3	4

'PERMA-SHIELD' VINYL CLAD WOOD CASEMENT WINDOW (IMPACT)

WINDOWS GLAZED WITH LAMINATED GLASS RATED FOR LARGE MISSILE IMPACT AND REQUIRE NO SHUTTERS.

APPROVAL APPLIES TO SINGLE, DOUBLE AND TRIPLE WINDOWS IN ANY COMBINATION OF VENTING OR STATIONARY UNITS.

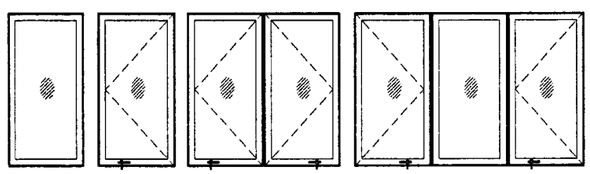

THIS PRODUCT IS DESIGNED TO COMPLY WITH THE HIGH VELOCITY HURRICANE ZONE OF THE 2001 FLORIDA BUILDING CODE.
ALSO FOR WIND LOADS AS PER ASCE 7 USING CORRESPONDING LOADS.

WOOD BUCKS BY OTHERS (MIN. 2X4 GRADE 2 SYP), MUST BE ANCHORED PROPERLY TO TRANSFER LOADS TO THE STRUCTURE.

ANCHORS SHALL BE AS LISTED, SPACED AS SHOWN ON DETAILS. ANCHOR EMBEDMENT TO BASE MATERIAL SHALL BE BEYOND WALL DRESSING OR STUCCO.

ANCHORING OR LOADING CONDITIONS NOT SHOWN IN THESE DETAILS ARE NOT PART OF THIS APPROVAL.

Approved as complying with the
Florida Building Code
Date September 19, 2002
NOA# 02-0603.01
Miami Dade Product Control
Division
By Alexandre Berman

Engr: DR. HUMAYOUN FAROOQ
STRUCTURES
FLA. PE # 16557

AUG 1 3 2002

AL-FAROOQ CORPORATION
ENGINEERS, PLANNERS & PRODUCT DESIGN
1235 SW 87 AVE
MIAMI, FLORIDA 33174
TEL. (305) 264-8100 FAX. (305) 262-6978
COMP-ANL\W01-46AC

'PERMA-SHIELD' VINYL CLAD WD. CASEMENT WDW.

ANDERSEN CORPORATION
100 FOURTH AVE. NORTH
BAYPORT, MN. 55003-1096
TEL. (800) 426-7691 FAX (-)

revisions:

no	date	by	description
A	08.09.02		REV. PER BCCO COMMENTS

date: 07-23-01
scale: 1/2"=1'-0"
dr. by: HAMID
chk. by:

drawing no.
W01-46

DESIGN LOAD CAPACITY – PSF (SINGLE UNITS)

WINDOW DESCRIPTION	UNIT WIDTH INCHES	UNIT HT. INCHES	GLASS TYPE 'A' OR 'B' VENTING (X) EXT. (+)	VENTING (X) INT. (–)	STATIONARY (O) EXT. (+)	STATIONARY (O) INT. (–)
CR12	17"	24–1/8"	67.0	82.0	67.0	82.0
CN12	20–1/2"		67.0	82.0	67.0	82.0
C12	24–1/8"		67.0	82.0	67.0	82.0
CW12	28–3/8"		67.0	82.0	67.0	82.0
CR125	17"	28–3/8"	67.0	82.0	67.0	82.0
CN125	20–1/2"		67.0	82.0	67.0	82.0
C125	24–1/8"		67.0	82.0	67.0	82.0
CW125	28–3/8"		67.0	82.0	67.0	82.0
CR13	17"	35–15/16"	67.0	82.0	67.0	82.0
CN13	20–1/2"		67.0	82.0	67.0	82.0
C13	24–1/8"		67.0	82.0	67.0	82.0
CW13	28–3/8"		67.0	82.0	67.0	82.0
CXW13	35–15/16"		67.0	82.0	67.0	82.0
CR135	17"	40–13/16"	67.0	82.0	67.0	82.0
CN135	20–1/2"		67.0	82.0	67.0	82.0
C135	24–1/8"		67.0	82.0	67.0	82.0
CW135	28–3/8"		67.0	82.0	67.0	82.0
CXW135	35–15/16"		67.0	82.0	67.0	82.0
CR14	17"	48"	67.0	82.0	67.0	82.0
CN14	20–1/2"		67.0	82.0	67.0	82.0
C14	24–1/8"		67.0	82.0	67.0	82.0
CW14	28–3/8"		67.0	82.0	67.0	82.0
CR145	17"	52–13/16"	67.0	82.0	67.0	82.0
CN145	20–1/2"		67.0	82.0	67.0	82.0
C145	24–1/8"		67.0	82.0	67.0	82.0
CW145	28–3/8"		67.0	82.0	67.0	82.0
CR15	17"	59–7/8"	67.0	82.0	67.0	71.0
CN15	20–1/2"		64.0	68.0	67.0	71.0
C15	24–1/8"		64.0	68.0	67.0	71.0
CW15	28–3/8"		64.0	68.0	67.0	71.0
CR155	17"	64–13/16"	60.0	64.0	67.0	71.0
CN155	20–1/2"		60.0	64.0	67.0	71.0
C155	24–1/8"		60.0	64.0	67.0	71.0
CW155	28–3/8"		50.0	52.0	67.0	70.8
CR16	17"	71–7/8"	61.8	65.6	67.0	71.0
CN16	20–1/2"		60.0	64.0	67.0	71.0
C16	24–1/8"		60.0	64.0	67.0	71.0
CW16	28–3/8"		50.0	52.0	65.5	65.5

DESIGN LOAD CAPACITY – PSF (DOUBLE UNITS)

WINDOW DESCRIPTION	UNIT WIDTH INCHES	UNIT HT. INCHES	GLASS TYPE 'A' OR 'B' XX, OX, XO OR OO EXT. (+)	XX, OX, XO OR OO INT. (–)
CR23	33–3/4"	35–15/16"	67.0	71.0
CN23	40–3/4"		67.0	71.0
C23	48"		67.0	71.0
CW23	56–1/2"		67.0	71.0
CR235	33–3/4"	40–13/16"	67.0	71.0
CN235	40–3/4"		67.0	71.0
C235	48"		67.0	71.0
CW235	56–1/2"		67.0	71.0
CR24	33–3/4"	48"	67.0	71.0
CN24	40–3/4"		67.0	71.0
C24	48"		67.0	71.0
CW24	56–1/2"		67.0	71.0
CR245	33–3/4"	52–13/16"	67.0	71.0
CN245	40–3/4"		67.0	71.0
C245	48"		67.0	71.0
CW245	56–1/2"		67.0	71.0
CR25	33–3/4"	59–7/8"	67.0	71.0
CN25	40–3/4"		63.7	67.5
C25	48"		60.0	64.0
CW25	56–1/2"		60.0	64.0
CR255	33–3/4"	64–13/16"	60.7	64.3
CN255	40–3/4"		60.0	64.0
C255	48"		55.7	59.4
CW255	56–1/2"		50.0	52.0
CR26	33–3/4"	71–7/8"	58.0	61.9
CN26	40–3/4"		55.0	58.0
C26	48"		55.0	58.0
CW26	56–1/2"		50.0	52.0

DESIGN LOAD CAPACITY – PSF (TRIPLE UNITS)

WINDOW DESCRIPTION	UNIT WIDTH INCHES	UNIT HT. INCHES	GLASS TYPE 'A' OR 'B' XOX, OOX, XOO, OOO OR XXX EXT. (+)	XOX, OOX, XOO, OOO OR XXX INT. (–)
C33	71–7/8"	35–15/16"	67.0	71.0
C335	71–7/8"	40–13/16"	67.0	71.0
C34	71–7/8"	48"	60.0	64.0
C345	71–7/8"	52–13/16"	60.0	64.0
C35	56–1/2"	59–7/8"	60.0	64.0

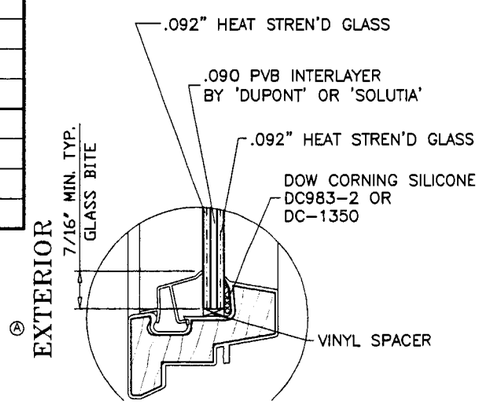

GLASS TYPE 'A'
9/32" THICK NOMINAL

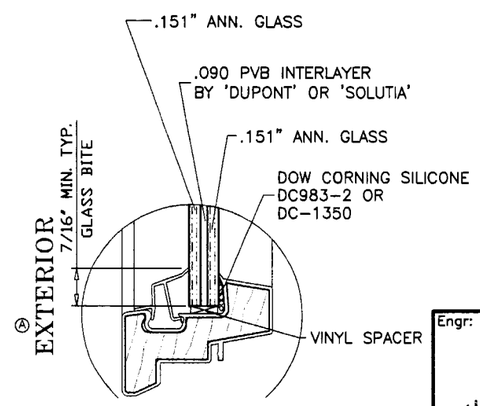

GLASS TYPE 'B'
3/8" THICK NOMINAL

IMPACT RESISTANT GLASS
SHUTTERS NOT REQUIRED

Engr: DR. HUMAYOUN FARCOQ
STRUCTURES
FLA. PE # 16557

AUG 1 3 2002

Approved as complying with the Florida Buiding Code
Date September 19, 2002
NOA# 02-0603.01
Miami Dade Product Control Division
By Eleonore Berman

AL-FAROOQ CORPORATION
ENGINEERS, PLANNERS & PRODUCT DESIGN
1235 SW 87 AVE
MIAMI, FLORIDA 33174
TEL. (305) 264-8100 FAX. (305) 262-6978
COMP-ANL\W01-46AC

'PERMA-SHIELD' VINYL CLAD WD. CASEMENT WDW.

ANDERSEN CORPORATION
100 FOURTH AVE. NORTH
BAYPORT, MN. 55003-1096
TEL. (800) 426-7691 FAX (-)

revisions:

no	date	by	description
A	08.09.02		REV. PER BCCO COMMENTS

date: 07-23-01
scale: 1/2" = 1"
dr. by: HAMID
chk. by:

drawing no.
W01-46

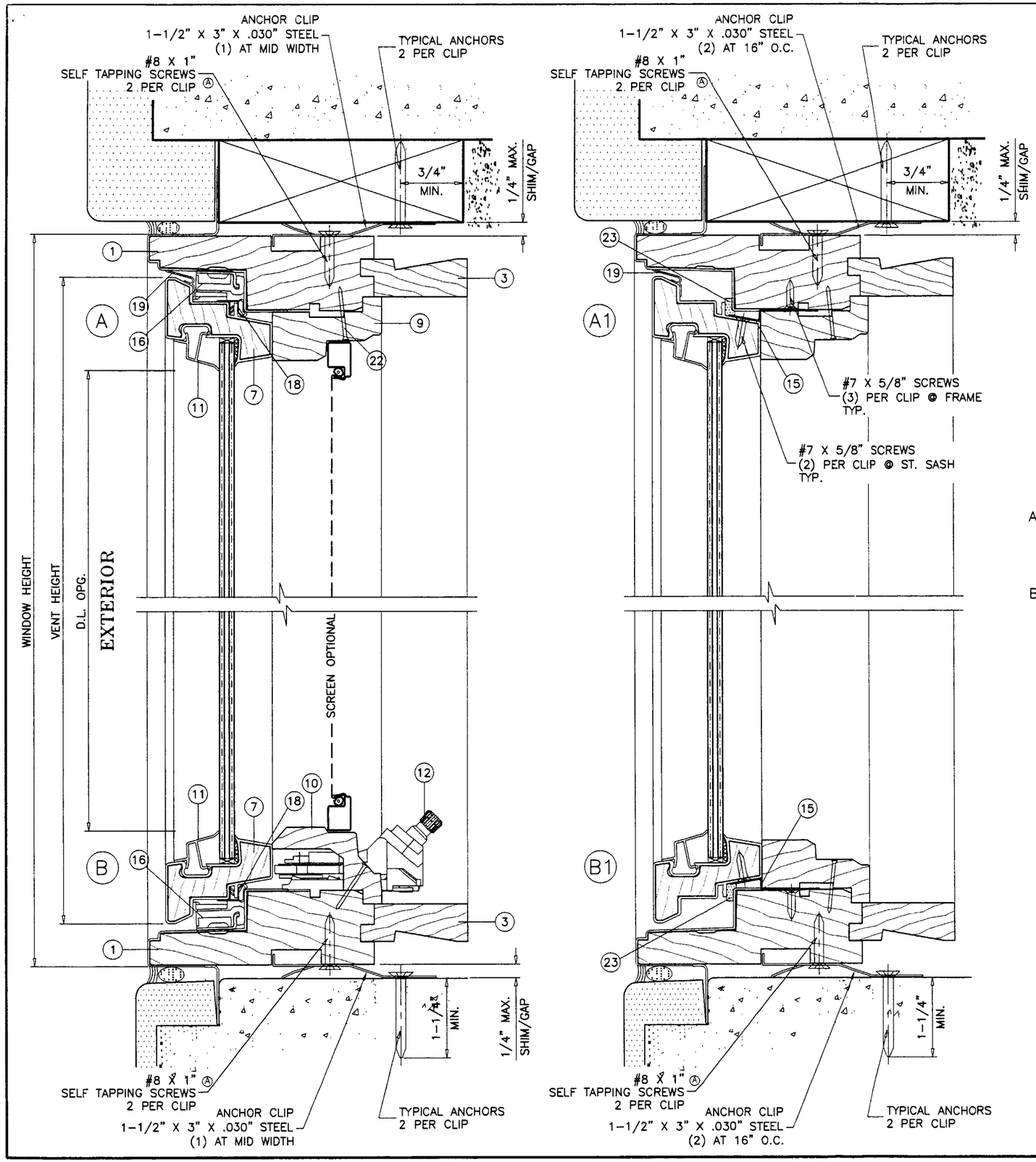

WOOD BUCKS NOT BY ANDERSEN, MUST SUSTAIN LOADS IMPOSED BY GLAZING SYSTEM AND TRANSFER THEM TO THE BUILDING STRUCTURE.

Ⓐ
NOTE:
PROVIDE ANCHOR CLIPS AT HEAD & SILL AS FOLLOWS
SINGLE AND DOUBLE UNITS: (1) AT CENTER OF EACH SASH
TRIPLE UNITS: (1) AT CENTER OF END SASH
(2) AT MIDDLE SASH SEE ELEV.

TYPICAL ANCHORS

A– #8 SMS
INTO 2BY WOOD BUCKS OR WOOD STRUCTURE
1-1/2" MIN. PENETRATION INTO WOOD

B– 3/16" ø TAPCONS (BY ELCO) OR
EQUIVALENT CONCRETE ANCHOR

THRU 1BY WOOD BUCKS INTO MASONRY OR DIRECTLY INTO MASONRY
1-1/4" MIN. MASONRY EMBED.

LOCKING OPTIONS:

SURFACE MOUNTED LOCK WITH KEEPERS ON SASH BY AMEROCK CORP.
(1) POINT LOCK FOR WINDOWS UPTO 28-3/8" HEIGHTS.
(2) POINT LOCK FOR WINDOWS UPTO 40-13/16" HEIGHTS.
(3) POINT LOCK FOR ALL BIGGER HEIGHTS.

Approved as complying with the Florida Buiding Code
Date September 19, 2002
NOA# 02-0603.01
Miami Dade Product Control Division
By Theodore Beeman

Engr: DR. HUMAYOUN FAROOQ
STRUCTURES
FLA. PE # 16557
AUG 1 3 2002

AL-FAROOQ CORPORATION
ENGINEERS, PLANNERS & PRODUCT DESIGN
1235 SW 87 AVE
MIAMI, FLORIDA 33174
TEL. (305) 264-8100 FAX. (305) 262-6978
COMP-ANL\W01-46AC

'PERMA-SHIELD' VINYL CLAD WD. CASEMENT WDW.

ANDERSEN CORPORATION
100 FOURTH AVE. NORTH
BAYPORT, MN. 55003-1096
TEL. (800) 426-7691 FAX (-)

revisions:			
no.	date	by	description
A	08.09.02		REV. PER BCCO COMMENTS

date: 07-23-01
scale: 1/2" = 1"
dr. by: HAMID
chk. by:

drawing no.
W01-46

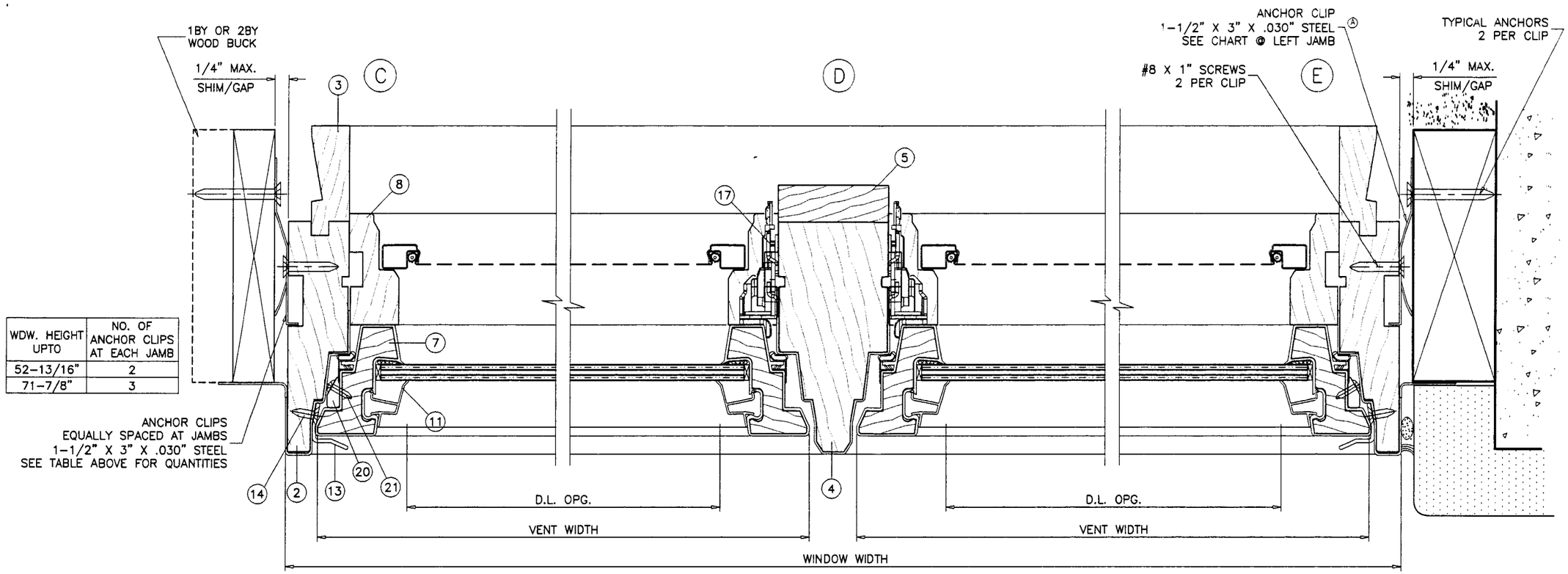

WDW. HEIGHT UPTO	NO. OF ANCHOR CLIPS AT EACH JAMB
52-13/16"	2
71-7/8"	3

EXTERIOR

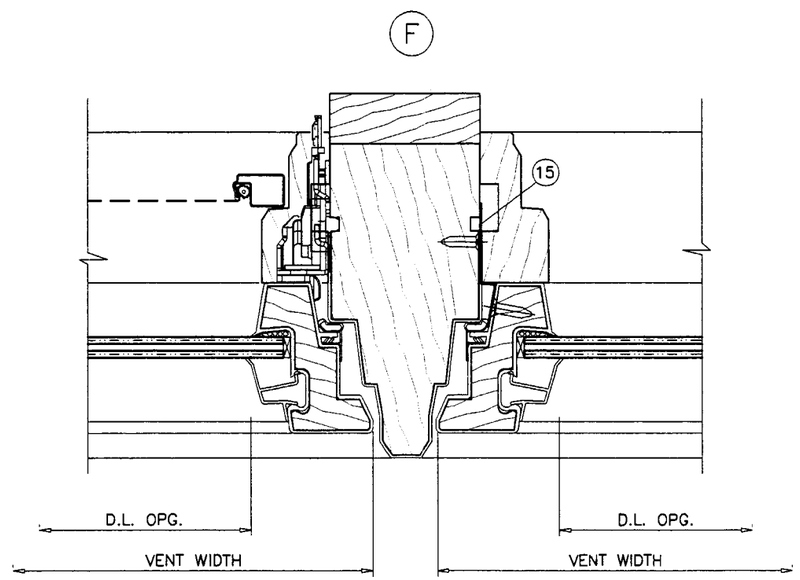

Approved as complying with the Florida Buiding Code
Date September 19, 2002
NOA# 02-0603.01
Miami Dade Product Control Division
By Theodore Berman

Engr: DR. HUMAYOUN FAROOQ
STRUCTURES
FLA. PE # 16557
AUG 13 2002

AL-FAROOQ CORPORATION
ENGINEERS, PLANNERS & PRODUCT DESIGN
1235 SW 87 AVE
MIAMI, FLORIDA 33174
TEL. (305) 264-8100 FAX. (305) 262-6978
COMP-ANL\W01-46A

'PERMA-SHIELD' VINYL CLAD WD. CASEMENT WDW.

ANDERSEN CORPORATION
100 FOURTH AVE. NORTH
BAYPORT, MN. 55003-1096
TEL. (800) 426-7691 FAX (-)

revisions:			
no	date	by	description
A	08.09.02		REV. PER BCCO COMMENTS

date: 07-23-01
scale: 1/2" = 1"
dr. by: HAMID
chk. by:

drawing no.
W01-46

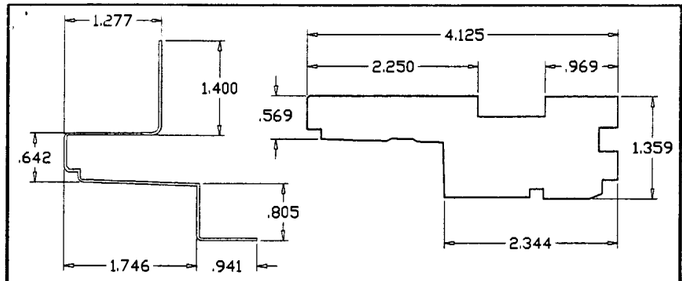

VINYL CLADDING FRAME HEAD/SILL

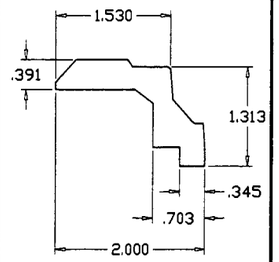

VENT STOP SILL

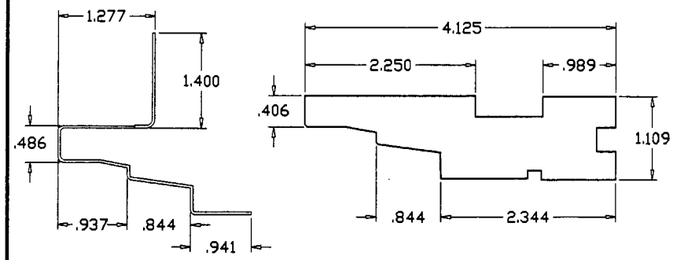

VINYL CLADDING FRAME JAMB

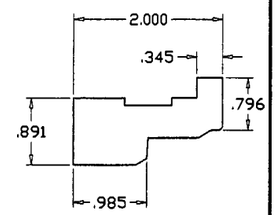

VENT STOP HEAD

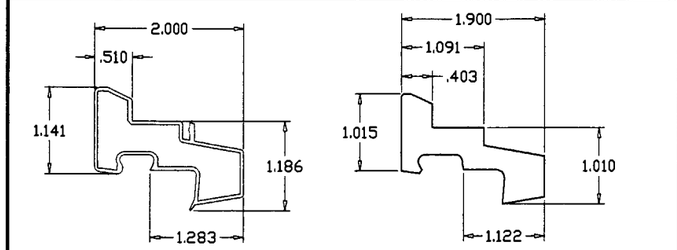

VINYL CLADDING VENT RAIL/STILE

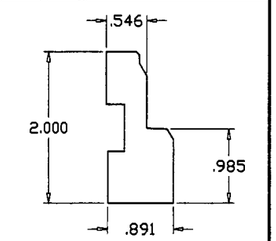

VENT STOP JAMB

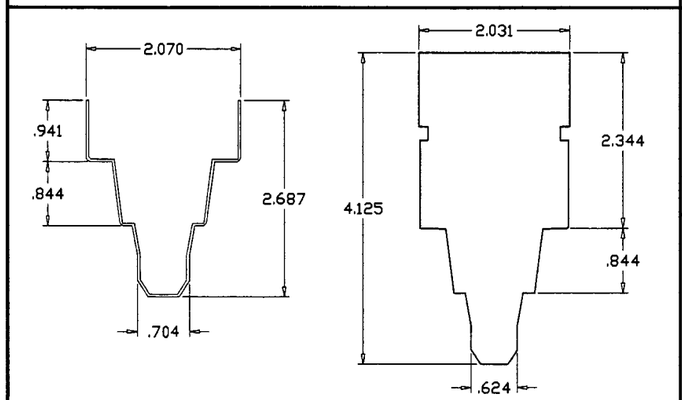

VINYL CLADDING CENTER POST

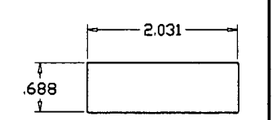

CENTER POST CASING

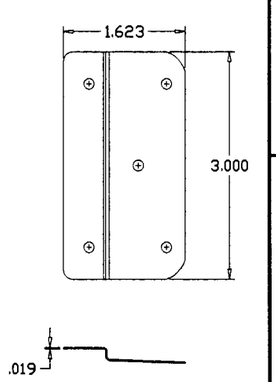

STATIONARY SASH CLIP

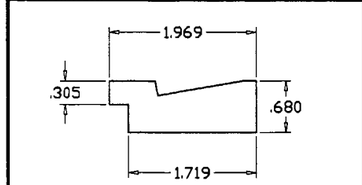

EXTENSION JAMB (HEAD/JAMB/SILL)

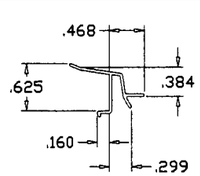

GLAZING BEAD

ITEM #	NUMBER	QUANTITY	DESCRIPTION	MATERIAL	MANF./SUPPLIER/REMARKS
1	30835	AS REQD.	FRAME HEAD/SILL	WOOD	ANDERSEN
2	30838	AS REQD.	FRAME JAMB	WOOD	ANDERSEN
3	–	OPTIONAL	EXTENSION JAMBS	WOOD	ANDERSEN
4	30839	1	POST MULLION	WOOD	ANDERSEN
5	30056	1	CASING MULLION	–	–
6	–	–	–	–	–
7	30013	4/ SASH	SASH RAIL/STILE	WOOD	ANDERSEN
8	–	2/ WDW.	VENT STOP JAMB	WOOD	ANDERSEN
9	30846/48	1/ WDW.	VENT STOP HEAD	WOOD	ANDERSEN
10	30843/45	1/ WDW.	VENT STOP SILL	WOOD	ANDERSEN
11	30184	AS REQD.	GLAZING BEAD	PVC	–
12	30810/12	1/ SASH	ROTO OPERATOR	STEEL	AMEROCK CORP.
13	30442	1/ SASH	SNUGGER	ALUMINUM	–
14	#8 X 1/2"	–	SNUGGER SCREWS	–	AT 1-1/2" FROM ENDS & 12" O.C.
15	30053	–	STATIONARY SASH CLIP	GALV. STEEL	–
16	1361409	2/ SASH	HINGE ASEMBLY AT TOP & BOTTOM OF SASH	STEEL	AMEROCK CORP.
17	–	AS REQD.	LOCK W/ KEEPERS ON SASH	STEEL	AMEROCK CORP.
18	30213	AS REQD.	WEATHERSTRIP STILE	–	–
19	30021	AS REQD.	WATERBAR WEATHERSTRIP	–	–
20	30871	1/ SASH	SASH REINFORCING BAR	ALUMINUM	FOR 64-13/16" & 71-7/8" WDW. HEIGHTS ONLY
21	#8 X 5/8"	–	REINFORCING BAR SCREWS	–	AT 11" O.C. MAX.
22	–	AS REQD.	BRAD NAILS 1-1/2" LONG	GALV. STEEL	–
23	30172	–	FOAM WEATHERSTRIPPING	–	–

ALL WOOD TO BE PONDEROSA PINE OR EQUAL

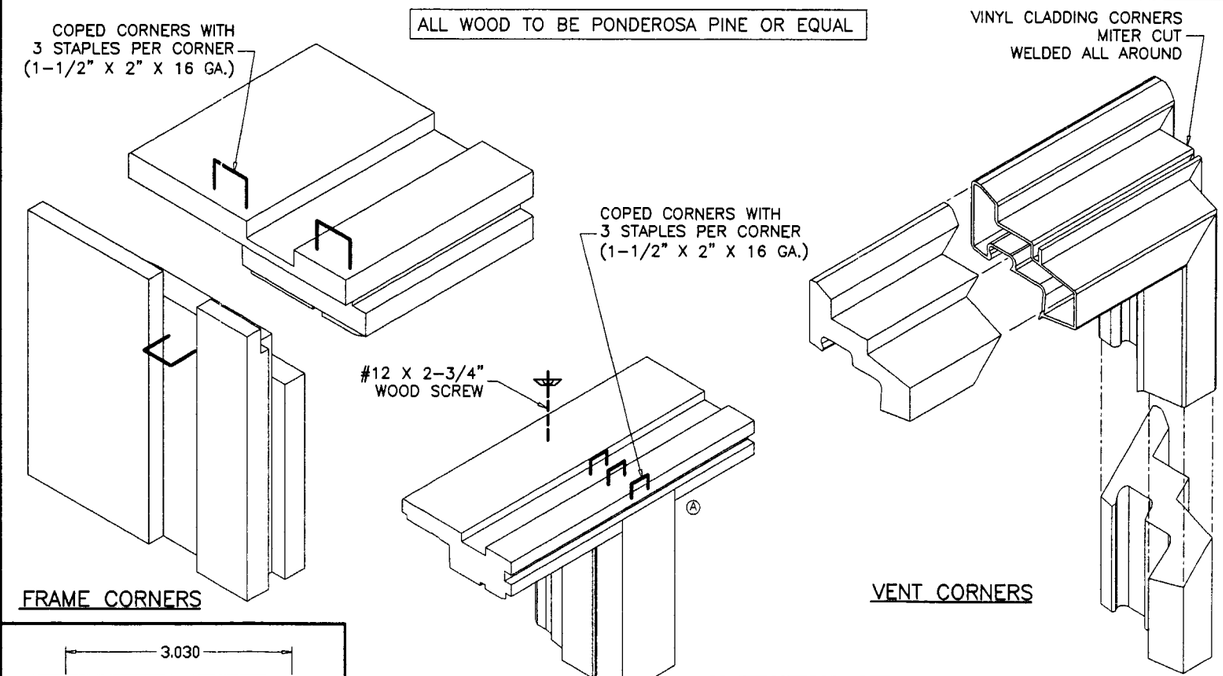

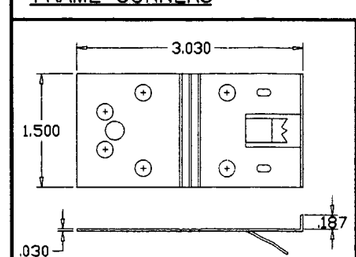

ANCHOR CLIP

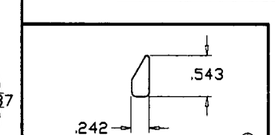

SASH REINFORCING BAR

Engr: DR. HUMAYOUN FAROOQ
STRUCTURES
FLA. PE # 16557

AUG 13 2002

Approved as complying with the Florida Building Code
Date September 19, 2002
NOA# 02-0603.01
Miami Dade Product Control Division
By

AL-FAROOQ CORPORATION
ENGINEERS, PLANNERS & PRODUCT DESIGN
1235 SW 87 AVE
MIAMI, FLORIDA 33174
TEL. (305) 264-8100 FAX. (305) 262-6978
COMP-ANL\W01-46AC

'PERMA-SHIELD' VINYL CLAD WD. CASEMENT WDW.

ANDERSEN CORPORATION
100 FOURTH AVE. NORTH
BAYPORT, MN. 55003-1096
TEL. (800) 426-7691 FAX (-)

revisions:

no	date	by	description
A	08.09.02		REV. PER BCCO COMMENTS

date: 07-23-01
scale: 1/2" = 1"
dr. by: HAMID
chk. by:

drawing no. W01-46

sheet 5 of 5