MIAMI-DADE

BUILDING CODE COMPLIANCE OFFICE (BCCO)
PRODUCT CONTROL DIVISION

MIAMI-DADE COUNTY, FLORIDA
METRO-DADE FLAGLER BUILDING
140 WEST FLAGLER STREET, SUITE 1603
MIAMI, FLORIDA 33130-1563
(305) 375-2901 FAX (305) 375-2908

NOTICE OF ACCEPTANCE (NOA)

Kawneer Company, Inc.
55 Guthridge court
Norcross, GA 30092

SCOPE:
This NOA is being issued under the applicable rules and regulations governing the use of construction materials. The documentation submitted has been reviewed by Miami-Dade County Product Control Division and accepted by the Board of Rules and Appeals (BORA) to be used in Miami Dade County and other areas where allowed by the Authority Having Jurisdiction (AHJ).

This NOA shall not be valid after the expiration date stated below. The Miami-Dade County Product Control Division (In Miami Dade County) and/or the AHJ (in areas other than Miami Dade County) reserve the right to have this product or material tested for quality assurance purposes. If this product or material fails to perform in the accepted manner, the manufacturer will incur the expense of such testing and the AHJ may immediately revoke, modify, or suspend the use of such product or material within their jurisdiction. BORA reserves the right to revoke this acceptance, if it is determined by Miami-Dade County Product Control Division that this product or material fails to meet the requirements of the applicable building code.

This product is approved as described herein, and has been designed to comply with the High Velocity Hurricane Zone of the Florida Building Code.

DESCRIPTION: Series "FG623" Aluminum Glazed Window Wall System(2-Bay max)–Impact

APPROVAL DOCUMENT: Drawing No. **T623-951**, titled "FG 623 –Large Missile" Sheets 1 through 8 of 8, dated 05/28/02 and last revised on 01-02-03, prepared by manufacturer, bearing the Miami-Dade County Product Control Approval stamp with the Notice of Acceptance number and approval date by the Miami-Dade County Product Control Division.

MISSILE IMPACT RATING: Large Missile Impact Resistant

LABELING: Each unit shall bear a permanent label with the manufacturer's name or logo, city, state and following statement: "Miami-Dade County Product Control Approved", unless otherwise noted herein.

RENEWAL of this NOA shall be considered after a renewal application has been filed and there has been no change in the applicable building code negatively affecting the performance of this product.

TERMINATION of this NOA will occur after the expiration date or if there has been a revision or change in the materials, use, and/or manufacture of the product or process. Misuse of this NOA as an endorsement of any product, for sales, advertising or any other purposes shall automatically terminate this NOA. Failure to comply with any section of this NOA shall be cause for termination and removal of NOA.

ADVERTISEMENT: The NOA number preceded by the words Miami-Dade County, Florida, and followed by the expiration date may be displayed in advertising literature. If any portion of the NOA is displayed, then it shall be done in its entirety.

INSPECTION: A copy of this entire NOA shall be provided to the user by the manufacturer or its distributors and shall be available for inspection at the job site at the request of the Building Official.
This NOA consists of this page 1 as well as approval document mentioned above.
The submitted documentation was reviewed by **Ishaq I. Chanda, P.E.**

PRODUCT CONTROL ACCEPTED

Kawneer Company, Inc.

NOTICE OF ACCEPTANCE: EVIDENCE SUBMITTED

(For File ONLY. Not part of NOA)

A. DRAWINGS

1. Manufacturer's die drawings and sections.
2. Drawing No. **T623-951**, titled "FG 623 –Large Missile" Sheets 1 through 8 of 8, dated 05/28/02 and last revised on 01-02-03, prepared by manufacturer.

B. TESTS

1. Test reports on 1) Air Infiltration Test, per PA 202-94
   2) Uniform Static Air Pressure Test, Loading per PA 202-94
   3) Water Resistance Test, per PA 202-94(Not performed)
   4.) Large Missile Impact Test, SFBC PA 201-94
   5.) Cyclic Loading Test, per SFBC PA 203-94

   along with installation diagram of an aluminum glazed system marked-up by HurricaneTesting Lab. Test Report No. **FTL 01061(0049-0807-01)**, dated 08-06-01 revised with addendum letter dated January 17, 2003 and January 24, 2003, signed and sealed by Vinu J. Abraham, P.E.
2. Additional reference Test reports on 1) Air Infiltration Test, per PA 202-94
   2) Uniform Static Air Pressure Test, Loading per PA 202-94
   3) Water Resistance Test, per PA 202-94
   4.) Large Missile Impact Test, SFBC PA 201-94
   5.) Cyclic Loading Test, per SFBC PA 203-94

   along with installation diagram of aluminum glazed system, marked-up by HurricaneTesting Lab. Test Report No. FTL **0049-0610-00, 0049-0615-00)**, dated 06-14-00 and 06-23-00, respectively, revised with addendum letter dated January 17, 2003, signed and sealed by Vinu J. Abraham, P.E.

C. CALCULATIONS:

1. Anchor Calculations and structural analysis, dated 06-05-02 and last revised on 01-30-03, prepared by Bromley Cook Engineering, signed and sealed by William D. Cook, P.E.

D. MATERIAL CERTIFICATIONS

1. Notice of Acceptance No. **00-0509.06** issued to Viracon Inc. StormGuard Laminate", expiring on 04/14/03.
2. Notice of Acceptance No. **02-1205.03** issued to Security Impact Glass Holding L. L. C for "Saf-Glas", expiring on 12/16/07.
3. Notice of Acceptance No. **01-1204.01** issued to E. I. DuPont DeNumours for "Sentry Glaa® Plus", expiring on 01/14/07.

E. STATEMENTS

1. Statement letter of conformance & No financial interest, dated 03-05-02, signed by William D. Cook, P. E.
2. Letters of compliance, (statements of compliance stated in above test reports)
3. Test proposal correspondence dated May 01, 2001 & May 08, 2001.

F. OTHER

1. Test proposal for "Kawneer FG 623 Imp" approved by BCCO dated 05-14-01.

Ishaq I. Chanda

Ishaq I. Chanda, P.E.
Product Control Examiner
NOA No 02-0603.07
Expiration Date: February 20, 2008
Approval Date: February 20, 2003

DADE COUNTY PRODUCT
APPROVAL DRAWINGS
KAWNEER CO.
FG 623 WINDOW WALL SYSTEM
LARGE MISSILE
MULTIPLE GLAZING INFILLS

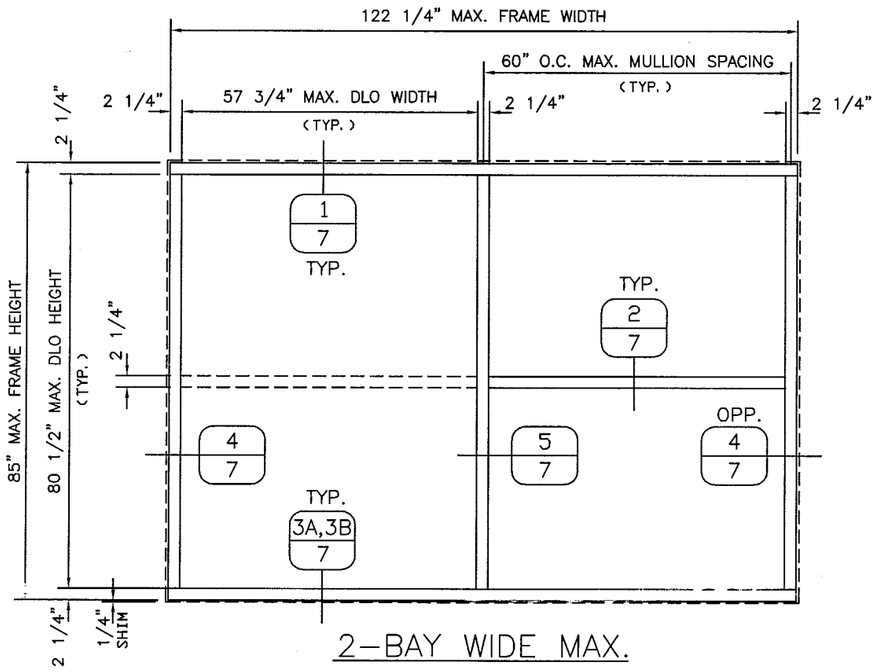

2-BAY WIDE MAX.

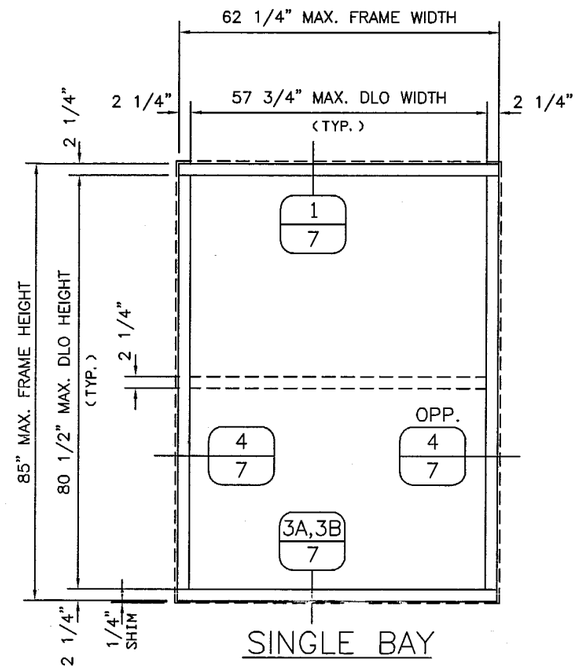

SINGLE BAY

TYPICAL ELEVATIONS

LARGE MISSILE

Approved as complying with the Florida Building Code
Date FEBRUARY 20, 2003
NOA# 02-0603.07
Miami Dade Product Control Division
By Ishaq I. Chanda

BROMLEY • COOK ENGINEERING
Structural Engineering Services
2004 N.E. 49th Street
Ft. Lauderdale, FL 33308
954-772-4624

WILLIAM D. COOK P.E
FLA. P.E. #43904
FLA. S.I. #2008

JAN 30 2003

E. C. NO.	REV.	DATE	DESCRIPTION OF REVISION	BY
-	2	01/02/03	REVISED PER DADE COUNTY REVIEW	DEH
-	1	09/26/02	REMOVED SMALL MISSILE INFORMATION	JME

NOTES:

1. SEE SHEET 2 OF 8 FOR GLAZING OPTIONS AND ASSOCIATED DESIGN PRESSURES.
2. SEE SHEETS 3,4,5 OF 8 FOR PERIMETER FASTENER SCHEDULE AND LOCATIONS.
3. HORIZONTAL MULLIONS (DETAIL 2/7) ARE OPTIONAL AT ANY LOCATION IN ANY BAY.
4. DLO = DAYLIGHT OPENING.

Kawneer
An Alcoa Company
Product Engineering & Development
555 GUTHRIDGE COURT
NORCROSS, GEORGIA 30092
PHONE (770) 449-5555
FAX (770) 734-1560

THIS DRAWING IS FOR DADE COUNTY PRODUCT APPROVAL ONLY

PRODUCT APPROVAL DRAWINGS
FG 623 - LARGE MISSILE
MULTIPLE INFILLS
PROTOCOLS PA 201/202/203

DRAWN BY	DATE
JME	05/28/02

DRWG. NO. T623-951

SHEET 1 of 8

T623-951-1.DWG

SCALE:

GLAZING SCHEDULE

MISSILE TYPE	GLAZING	GLASS OPTIONS	MAX. DESIGN PRESSURES
LARGE	SILICONE (SEE SHEET 8 FOR GLAZING DETAILS)	5/8" HRG-2 BY VIRACON 1/4" HEAT STRENGTHENED OUTBOARD LITE / .050 URETHANE / .080 POLYCARBONATE / .050 URETHANE / 1/4" HEAT STRENGTHENED INBOARD LITE	+50 / -70 PSF
		9/16" SAF-GLAS BY SECURITY IMPACT GLASS 1/4" HEAT STRENGTHENED OUTBOARD LITE / .015 ADHESIVE / .070 POLYCARBONATE / .015 ADHESIVE / 1/4" HEAT STRENGTHENED INBOARD LITE	+50 / -70 PSF
		9/16" SENTRYGLAS® PLUS 1/4" HEAT STRENGTHENED OUTBOARD LITE / .090 DUPONT SGP INTERLAYER / 1/4" HEAT STRENGTHENED INBOARD LITE	+50 / -70 PSF
		9/16" STORMGUARD™ BY VIRACON 1/4" HEAT STRENGTHENED OUTBOARD LITE / .100 SOLUTIA SAFLEX® HP INTERLAYER / 1/4" HEAT STRENGTHENED INBOARD LITE	+50 / -70 PSF

TYPICAL GLASS SIZE FOR LARGE MISSILE = (DLO WIDTH + 1-1/4") X (DLO HEIGHT + 7/8")

REFER TO GLAZING DETAILS ON SHEET 8 FOR GLASS BITE

Approved as complying with the Florida Building Code
Date FEB 20, 2003
NOA# 02-0603.07
Miami Dade Product Control Division
By Shaq L. Shands

E. C. NO.	REV.	DATE	DESCRIPTION OF REVISION	BY
-	2	01/02/03	REVISED PER DADE COUNTY REVIEW	DEH
-	1	09/26/02	REMOVED SMALL MISSILE INFORMATION	JME

BROMLEY • COOK ENGINEERING
Structural Engineering Services
2004 N.E. 49th Street
Ft. Lauderdale, FL 33308
954-772-4624

JAN 30 2003

Kawneer
An Alcoa Company
Product Engineering & Development
555 GUTHRIDGE COURT
NORCROSS, GEORGIA 30092
PHONE (770) 449-5555
FAX (770) 734-1560

THIS DRAWING IS FOR DADE COUNTY PRODUCT APPROVAL ONLY

PRODUCT APPROVAL DRAWINGS
FG 623 - LARGE MISSILE
MULTIPLE INFILLS
PROTOCOLS PA 201/202/203

DRAWN BY JME
DATE 05/28/02
DRWG. NO. T623-951
SHEET 2 of 8
T623-951-2.DWG
SCALE:

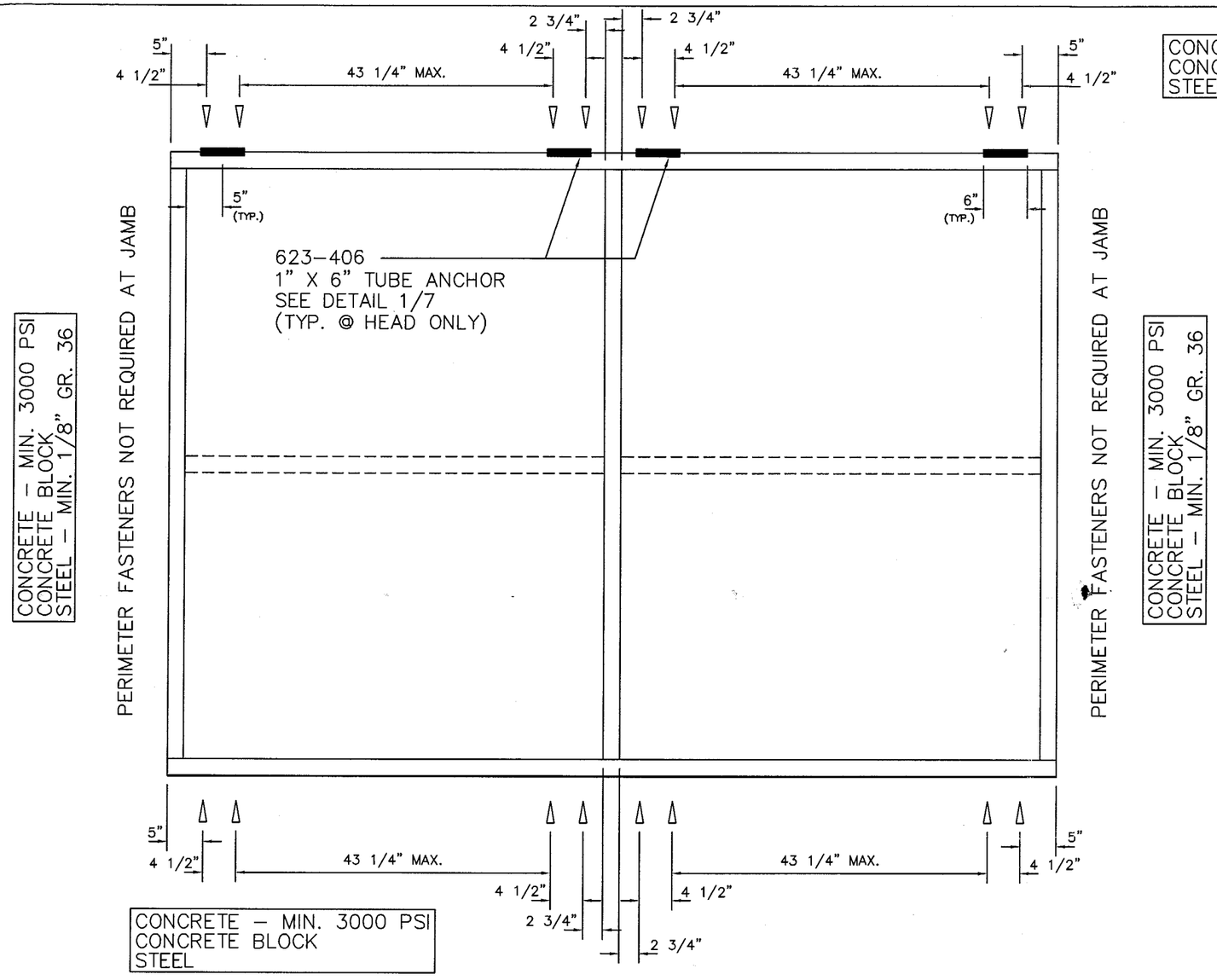

PERIMETER FASTENER LOCATIONS CONCRETE/CBS/STEEL SUBSTRATES

Approved as complying with the Florida Building Code
Date FEB 20, 2003
NOA# 02-0603.07
Miami Dade Product Control
Division
By Ishaq I. Chauda

FASTENER SCHEDULE

NUMBER	MATERIAL	DESCRIPTION	SUBSTRATE	LOCATION	MIN. EMBED.	MAX. SPACING
HW4–214	–	1/4" x 2–1/4" HEX WASHER HEAD TAPCON BY ELCO	CONCRETE/CBS	623–406 TUBE HEAD ANCHOR 623–110/804–171 SILL ANCHOR RAIL	1–1/2"	SEE ABOVE
AF 876	STEEL SAE J429 GRADE 5	ELCO DRILFLEX STRUCTURAL FASTENER 1/4–20 x 1–1/2" W/ #4 POINT	STEEL	623–406 TUBE HEAD ANCHOR 623–110/804–171 SILL ANCHOR RAIL	1/8"	SEE ABOVE

E. C. NO.	REV.	DATE	DESCRIPTION OF REVISION	BY
-	2	01/02/03	REVISED PER DADE COUNTY REVIEW	DEH
-	1	09/26/02	REMOVED SMALL MISSILE INFORMATION	JME

BROMLEY • COOK ENGINEERING
Structural Engineering Services
2004 N.E. 49th Street
Ft. Lauderdale, FL 33308
954-772-4624

JAN 30 2003

Kawneer
An Alcoa Company
Product Engineering & Development
555 GUTHRIDGE COURT
NORCROSS, GEORGIA 30092
PHONE (770) 449-5555
FAX (770) 734-1560

THIS DRAWING IS FOR DADE COUNTY PRODUCT APPROVAL ONLY

PRODUCT APPROVAL DRAWINGS
FG 623 - LARGE MISSILE
MULTIPLE INFILLS
PROTOCOLS PA 201/202/203

DRAWN BY	DATE
JME	05/28/02
DRWG. NO.	
T623–951	
SHEET	T623–951–3.DWG
3 of 8	

SCALE:

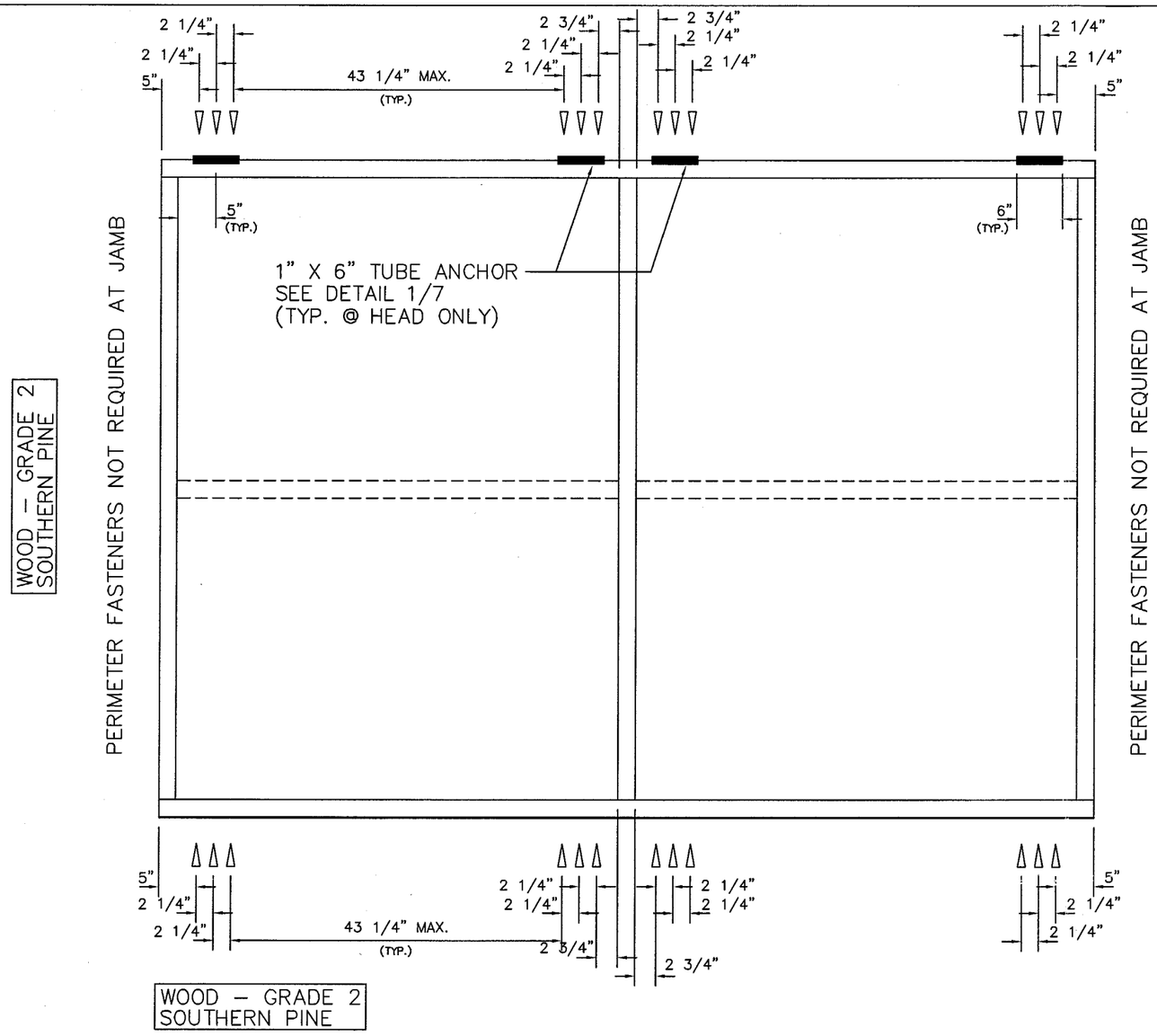

PERIMETER FASTENER LOCATIONS WOOD SUBSTRATE

#14 WOOD SCREWS

Approved as complying with the Florida Building Code
Date FEB 20, 2003
NOA# 02-0603.07
Miami Dade Product Control Division
By Ishaq I. Chanda

FASTENER SCHEDULE

NUMBER	MATERIAL	DESCRIPTION	SUBSTRATE	LOCATION	MIN. EMBED.	MAX. SPACING
–	STAINLESS STEEL OR CORROSION RESISTANT STEEL	#14 X 2" PAN HEAD WOOD SCREW (ALT: 1/4–14 SHEET METAL SCREW)	WOOD	623–406 TUBE HEAD ANCHOR 623–110/804–171 SILL ANCHOR RAIL	1–1/2"	SEE ABOVE

E. C. NO.	REV.	DATE	DESCRIPTION OF REVISION	BY
–	2	01/02/03	NO CHANGE	DEH
–	1	09/26/02	REMOVED SMALL MISSILE INFORMATION	JME

BROMLEY • COOK ENGINEERING
Structural Engineering Services
2004 N.E. 49th Street
Ft. Lauderdale, FL 33308
954-772-4624

JAN 30 2003

Kawneer
An Alcoa Company
Product Engineering & Development
555 GUTHRIDGE COURT
NORCROSS, GEORGIA 30092
PHONE (770) 449-5555
FAX (770) 734-1560

THIS DRAWING IS FOR DADE COUNTY PRODUCT APPROVAL ONLY

PRODUCT APPROVAL DRAWINGS
FG 623 - LARGE MISSILE
MULTIPLE INFILLS
PROTOCOLS PA 201/202/203

DRAWN BY	DATE
JME	05/28/02

DRWG. NO. T623-951

SHEET 4 of 8

T623-951-4.DWG

SCALE:

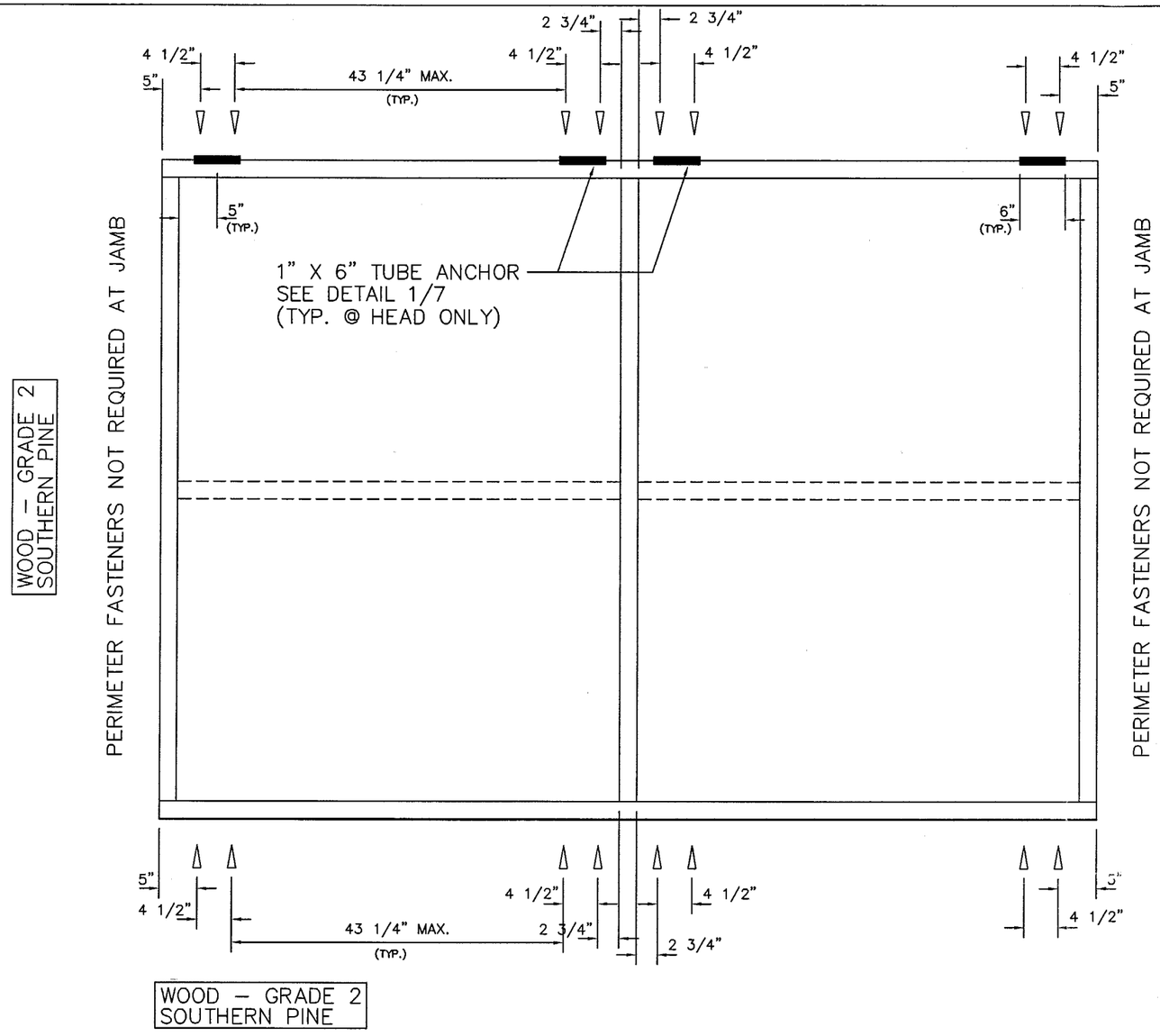

PERIMETER FASTENER LOCATIONS WOOD SUBSTRATE

5/16" LAG SCREWS

Approved as complying with the Florida Building Code
Date FEB 20, 2003
NOA# 02-0603.07
Miami Dade Product Control Division
By Ishaq I. Chanda

FASTENER SCHEDULE

NUMBER	MATERIAL	DESCRIPTION	SUBSTRATE	LOCATION	MIN. EMBED.	MAX. SPACING
–	STAINLESS STEEL OR CORROSION RESISTANT STEEL	5/16" X 3" LAG SCREW	WOOD	623–406 TUBE HEAD ANCHOR 623–110/804–171 SILL ANCHOR RAIL	2–1/2"	SEE ABOVE

E. C. NO.	REV.	DATE	DESCRIPTION OF REVISION	BY
–	2	01/02/03	NO CHANGE	DEH
–	1	09/26/02	REMOVED SMALL MISSILE INFORMATION	JME

BROMLEY • COOK ENGINEERING
Structural Engineering Services
2004 N.E. 49th Street
Ft. Lauderdale, FL 33308
954-772-4624

JAN 30 2003

Kawneer
An Alcoa Company
Product Engineering & Development
555 GUTHRIDGE COURT
NORCROSS, GEORGIA 30092
PHONE (770) 449-5555
FAX (770) 734-1560

THIS DRAWING IS FOR DADE COUNTY PRODUCT APPROVAL ONLY

PRODUCT APPROVAL DRAWINGS
FG 623 - LARGE MISSILE
MULTIPLE INFILLS
PROTOCOLS PA 201/202/203

DRAWN BY	DATE
JME	05/28/02

DRWG. NO. T623-951

SHEET 5 of 8

T623-951-5.DWG

SCALE:

#	PT. NO.	DESCRIPTION	DIMENSIONS	MATERIAL	NOTES
1	27–017	SETTING BLOCK	.312 x .750 x 4.125	EPDM	KAWNEER RUBBER & PLASTICS
2	27–850	FIXED GASKET	.250 SPACE	EPDM	TREMCO
3	27–920	FIXED GASKET	.188 SPACE	EPDM	TREMCO
4	68–605	SIDE BLOCK	.250 x 1.062 x 4.125	EPDM	KAWNEER RUBBER & PLASTICS
5	127–028	WEDGE GASKET	.312 SPACE	EPDM	TREMCO
6	127–038	SILICONE SPACER	.250 SPACE	SCR–900	TREMCO
7	127–048	FIXED GASKET	.312 SPACE	EPDM	TREMCO
8	175–313	WATER DEFLECTOR	–	RIGID PVC	ASTRO PLASTICS
9	422–434	W BLOCK	–	EPDM	KAWNEER RUBBER & PLASTICS
10	–	DOW CORNING 983 / 995 SILICONE	–	SILICONE	
11	623–103	HORIZONTAL MULLION	2.250 x 6.000 x .090	6063–T6 ALUMINUM	
12	623–104	GLASS STOP	1.250 x 4.696 x .090	6063–T6 ALUMINUM	
13	623–105	HEAD	2.250 x 6.000 x .090	6063–T6 ALUMINUM	
14	623–107	VERTICAL MULLION	2.250 x 6.000 x .100	6063–T6 ALUMINUM	
15	623–110	SILL ANCHOR RAIL	.375 x 4.987 x .115	6063–T6 ALUMINUM	
16	623–111	GLASS STOP FILLER	.434 x 4.357 x .080	6063–T6 ALUMINUM	
17	623–112	JAMB POCKET FILLER	1.042 x .750 x .060	6063–T6 ALUMINUM	
18	623–113	SILL	2.250 x 6.000 x .090	6063–T6 ALUMINUM	
19	623–402	SETTING BLOCK CHAIR	1.437 x 1.200 x .080 x 4.125	6063–T6 ALUMINUM	
20	623–403	HEAD/SILL END DAM	2.250 x 2.500 x .060	6063–T6 ALUMINUM	
21	623–406	TUBE ANCHOR	1.000 x 6.000 x .125 x 2.500	6063–T6 ALUMINUM	
22	623–409	SHEAR BLOCK	.923 x 4.000 x .120 x 1.250	6063–T6 ALUMINUM	
23	804–171	ALTERNATE SILL ANCHOR RAIL	1.208 x 5.560 x .115	6063–T6 ALUMINUM	
24	28–400	SHEAR BLOCK ATTACHMENT SCREW	#10 x 1–19/32" PHTFS	430 SERIES STAINLESS STEEL	
25	28–710	HORIZONTAL/GLASS STOP ATTACHMENT SCREW	#10 x 5/8" PHTFS	430 SERIES STAINLESS STEEL	
26	128–112	SPLINE SCREW	#12 x 1–1/2" PHTFS	300 SERIES STAINLESS STEEL	

MATERIALS LIST

Approved as complying with the Florida Buiding Code
Date FEB 20, 2003
NOA# 02-0603.07
Miami Dade Product Control Division
By Ishaq I. Chanda

E. C. NO.	REV.	DATE	DESCRIPTION OF REVISION	BY
–	2	01/02/03	REVISED PER DADE COUNTY REVIEW	DEH
–	1	09/26/02	REMOVED SMALL MISSILE INFORMATION	JME

BROMLEY • COOK ENGINEERING
Structural Engineering Services
2004 N.E. 49th Street
Ft. Lauderdale, FL 33308
954-772-4624

JAN 30 2003

Kawneer
An Alcoa Company
Product Engineering & Development
555 GUTHRIDGE COURT
NORCROSS, GEORGIA 30092
PHONE (770) 449-5555
FAX (770) 734-1560

THIS DRAWING IS FOR DADE COUNTY PRODUCT APPROVAL ONLY

PRODUCT APPROVAL DRAWINGS
FG 623 - LARGE MISSILE
MULTIPLE INFILLS
PROTOCOLS PA 201/202/203

DRAWN BY: JME
DATE: 05/28/02
DRWG. NO.: T623–951
SHEET: 6 of 8
T623–951–6.DWG
SCALE:

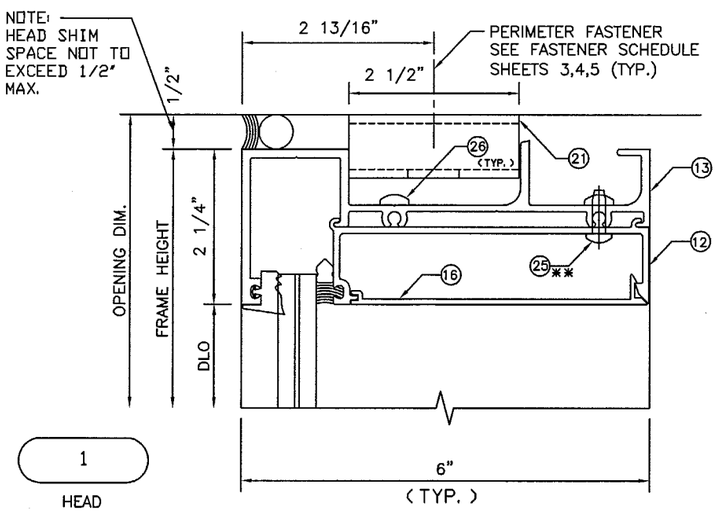

1

HEAD

* ATTACHES (11) TO (22). ONE PER SHEARBLOCK.

** ATTACHES (12) TO (11) AND (13). 6" FROM EACH END AND MAX. 18" ON CENTER

EXTERIOR

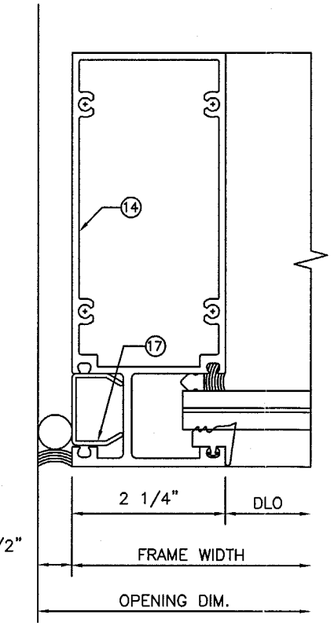

4

JAMB

NOTE:
NO PERIMETER FASTENERS REQUIRED AT JAMBS

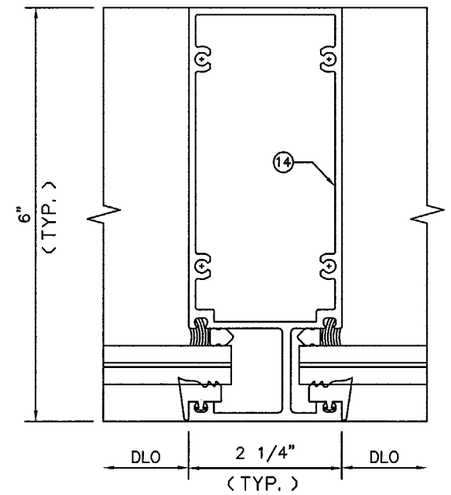

EXTERIOR

5

VERTICAL MULLION

I = 8.707 IN.^{4}
S = 2.719 IN.^{3}

Approved as complying with the Florida Building Code
Date FEB 20, 2003
NOA# 02-0603.07
Miami Dade Product Control Division
By Shaq L. Chand

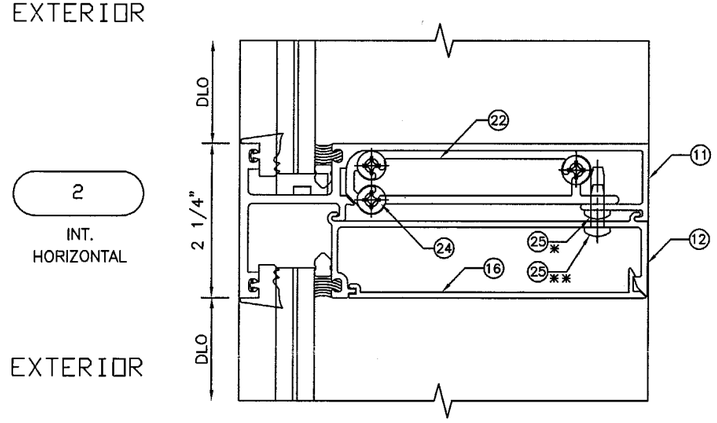

2

INT. HORIZONTAL

EXTERIOR

LARGE MISSILE IMPACT RESISTANT DETAILS

REFER TO GLAZING DETAILS ON SHEET 8 OF 8 FOR SPECIFIC INFORMATION REGARDING GLAZING MATERIALS AND GLASS BITE

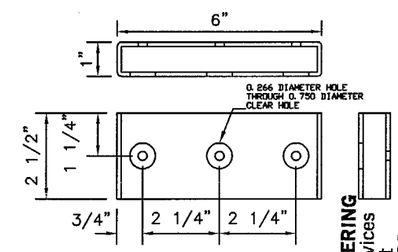

TUBE ANCHOR
(PT. NO. 21)

3A

SILL

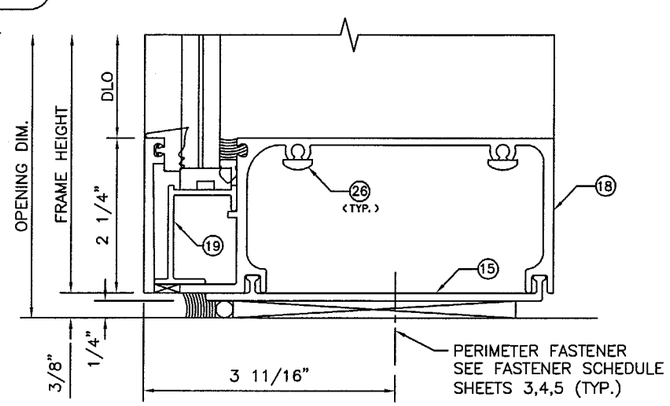

EXTERIOR

3B

ALT. SILL ANCHOR

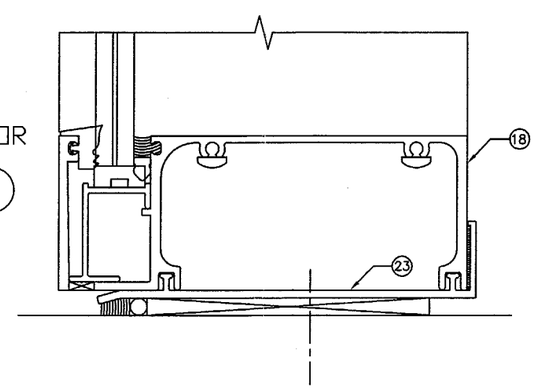

REV. NO.	DATE	DESCRIPTION OF REVISION	BY
2	01/02/03	REVISED PER DADE COUNTY REVIEW	DEH
1	09/26/02	REMOVED SMALL MISSILE INFORMATION	JME

BROMLEY • COOK ENGINEERING
Structural Engineering Services
2004 N.E. 49th Street
Ft. Lauderdale, FL 33308
954-772-4624

JAN 30 2003

Kawneer
An Alcoa Company
Product Engineering & Development
555 GUTHRIDGE COURT
NORCROSS, GEORGIA 30092
PHONE (770) 449-5555
FAX (770) 734-1560

THIS DRAWING IS FOR DADE COUNTY PRODUCT APPROVAL ONLY

PRODUCT APPROVAL DRAWINGS
FG 623 - LARGE MISSILE
MULTIPLE INFILLS
PROTOCOLS PA 201/202/203

DRAWN BY	DATE
JME	05/28/02

DRWG. NO. T623-951

SHEET 7 of 8

T623-951-7.DWG

SCALE:

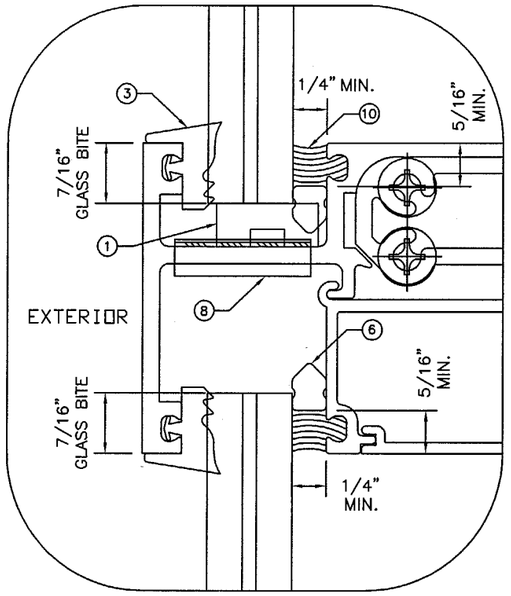

TYPICAL HORIZONTAL GLAZING DETAIL
5/8" HRG-2 BY VIRACON

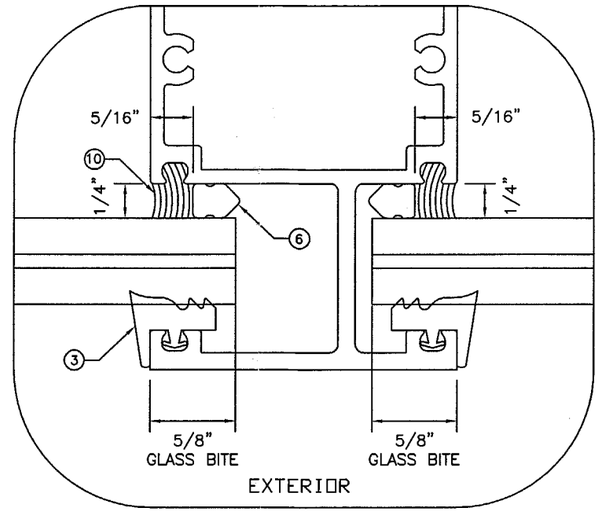

TYPICAL VERTICAL GLAZING DETAIL
5/8" HRG-2 BY VIRACON

NOTE: MINIMUM 5/16" X 1/4" SILICONE ADHESIVE BEAD (TYP.)

LARGE MISSILE GLAZING DETAILS

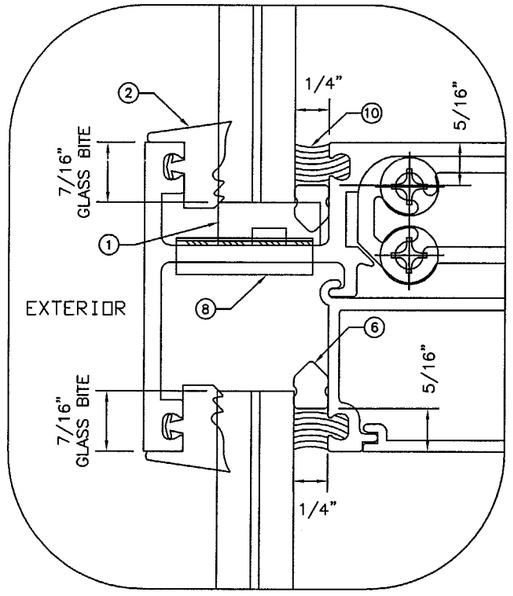

TYPICAL HORIZONTAL GLAZING DETAIL
9/16" LAMINATED SAF-GLAS BY SECURITY IMPACT
9/16" LAMINATED SENTRYGLAS® PLUS
9/16" LAMINATED STORMGUARD™ BY VIRACON

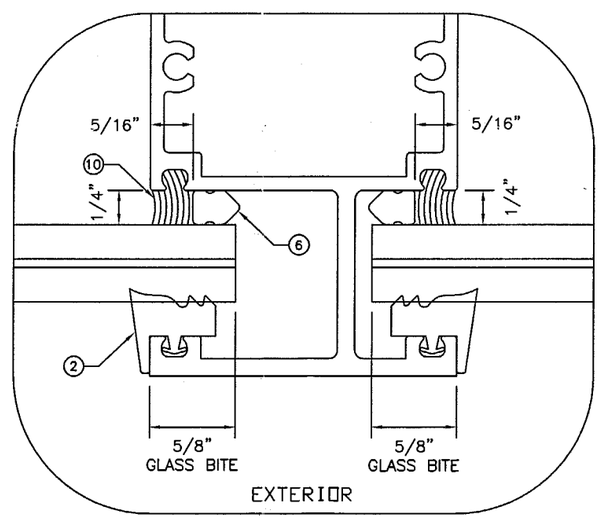

TYPICAL VERTICAL GLAZING DETAIL
9/16" LAMINATED SAF-GLAS BY SECURITY IMPACT
9/16" LAMINATED SENTRYGLAS® PLUS
9/16" LAMINATED STORMGUARD™ BY VIRACON

Approved as complying with the Florida Building Code
Date FEB 20 2003
NOA# 02-0603.07
Miami Dade Product Control
Signature
By Ishaq I. Chanda

E. C. NO.	REV.	DATE	DESCRIPTION OF REVISION	BY
-	2	01/02/03	REVISED PER DADE COUNTY REVIEW	DEH
-	1	09/26/02	REMOVED SMALL MISSILE INFORMATION	JME

BROMLEY • COOK ENGINEERING
Structural Engineering Services
2004 N.E. 49th Street
Ft. Lauderdale, FL 33308
954-772-4624

JAN 30 2003

Kawneer
An Alcoa Company
Product Engineering & Development
555 GUTHRIDGE COURT
NORCROSS, GEORGIA 30092
PHONE (770) 449-5555
FAX (770) 734-1560

THIS DRAWING IS FOR DADE COUNTY PRODUCT APPROVAL ONLY

PRODUCT APPROVAL DRAWINGS
FG 623 - LARGE MISSILE
MULTIPLE INFILLS
PROTOCOLS PA 201/202/203

DRAWN BY	DATE
JME	05/28/02

DRWG. NO. T623-951

SHEET 8 of 8

T623-951-8.DWG

SCALE: