MIAMI-DADE

BUILDING CODE COMPLIANCE OFFICE (BCCO)
PRODUCT CONTROL DIVISION

MIAMI-DADE COUNTY, FLORIDA
METRO-DADE FLAGLER BUILDING
140 WEST FLAGLER STREET, SUITE 1603
MIAMI, FLORIDA 33130-1563
(305) 375-2901 FAX (305) 375-2908

NOTICE OF ACCEPTANCE (NOA)

Traco Security Windows & Doors, Inc.
2304 Silverdale Road
Johnson City, TN 37601

SCOPE:
This NOA is being issued under the applicable rules and regulations governing the use of construction materials. The documentation submitted has been reviewed by Miami-Dade County Product Control Division and accepted by the Board of Rules and Appeals (BORA) to be used in Miami Dade County and other areas where allowed by the Authority Having Jurisdiction (AHJ).

This NOA shall not be valid after the expiration date stated below. The Miami-Dade County Product Control Division (In Miami Dade County) and/or the AHJ (in areas other than Miami Dade County) reserve the right to have this product or material tested for quality assurance purposes. If this product or material fails to perform in the accepted manner, the manufacturer will incur the expense of such testing and the AHJ may immediately revoke, modify, or suspend the use of such product or material within their jurisdiction. BORA reserves the right to revoke this acceptance, if it is determined by Miami-Dade County Product Control Division that this product or material fails to meet the requirements of the applicable building code.

This product is approved as described herein, and has been designed to comply with the High Velocity Hurricane Zone of the Florida Building Code.

DESCRIPTION: Series 440 (140) Aluminum Single Hung Window

APPROVAL DOCUMENT: Drawing No. W98-106, titled "Coastal-140 Impact Single Hung Window", sheets 1 through 5, prepared, signed and sealed by Humayoun Farooq, P.E., dated 3/28/02, bearing the Miami-Dade County Product Control Revision stamp with the Notice of Acceptance number and expiration date by the Miami-Dade County Product Control Division.

MISSILE IMPACT RATING: Small Missile Impact and Non-Impact

LABELING: Each unit shall bear a permanent label with the manufacturer's name or logo, city, state and following statement: "Miami-Dade County Product Control Approved", unless otherwise noted herein.

RENEWAL of this NOA shall be considered after a renewal application has been filed and there has been no change in the applicable building code negatively affecting the performance of this product.

TERMINATION of this NOA will occur after the expiration date or if there has been a revision or change in the materials, use, and/or manufacture of the product or process. Misuse of this NOA as an endorsement of any product, for sales, advertising or any other purposes shall automatically terminate this NOA. Failure to comply with any section of this NOA shall be cause for termination and removal of NOA.

ADVERTISEMENT: The NOA number preceded by the words Miami-Dade County, Florida, and followed by the expiration date may be displayed in advertising literature. If any portion of the NOA is displayed, then it shall be done in its entirety.

INSPECTION: A copy of this entire NOA shall be provided to the user by the manufacturer or its distributors and shall be available for inspection at the job site at the request of the Building Official.
This NOA **renews** and **revises NOA # 00-0920.04** and, consists of this page 1 as well as approval document mentioned above.
The submitted documentation was reviewed by **Raul Rodriguez.**

PRODUCT CONTROL ACCEPTED

NOA No 02-0604.03
Expiration Date: June 10, 2007
Approval Date: July 18, 2002

WOOD BUCKS NOT BY SECURITY WINDOWS, MUST SUSTAIN LOADS IMPOSED BY GLAZING SYSTEM AND TRANSFER THEM TO THE BUILDING STRUCTURE.

TAPCONS AS MANUFACTURED BY ELCO.
OR EQUIVALENT CONC. ANCHOR HOLDING CURRENT NOTICE OF ACCEPTANCE.

SEALANTS:

FRAME AND VENT CORNERS SEALED WITH SCHNEE MOREHEAD 5504.

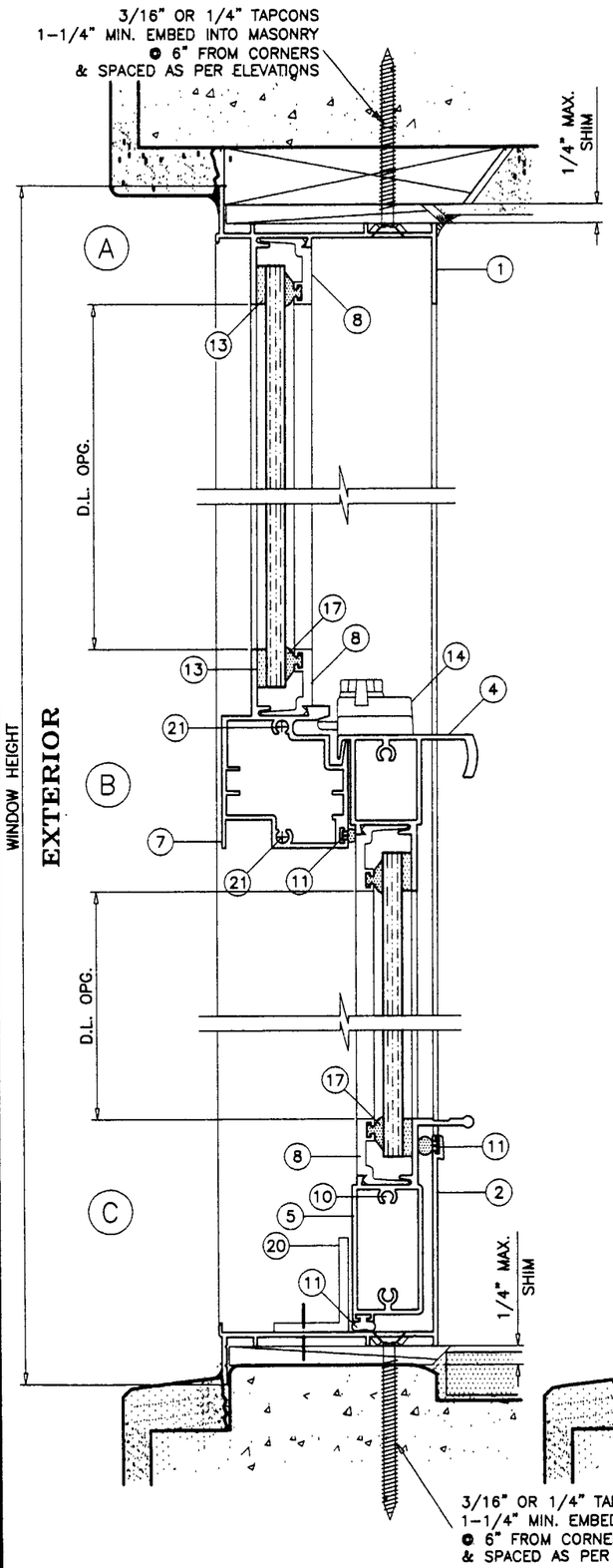

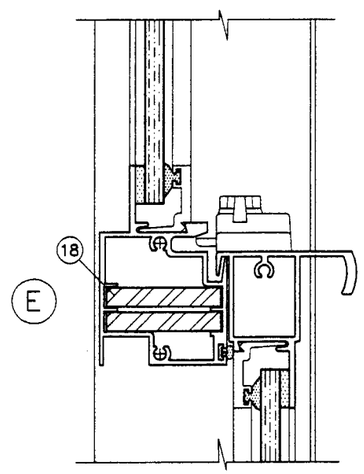

SEE CHART ON SHEET 5
FOR REINFORCED MTG. RAIL

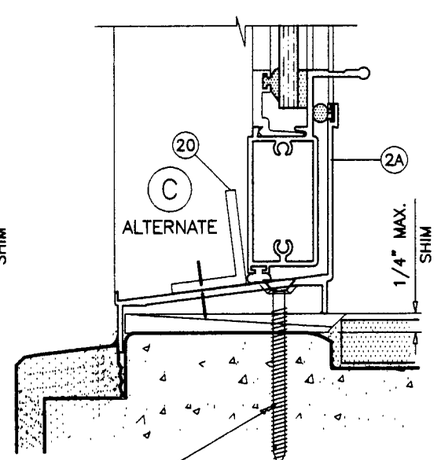

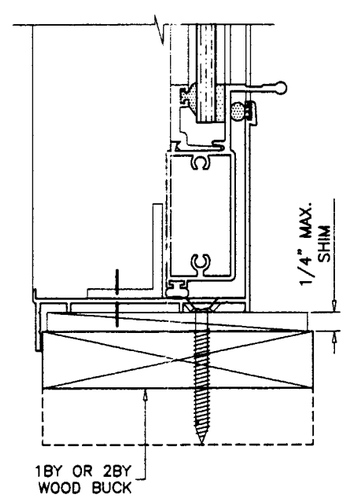

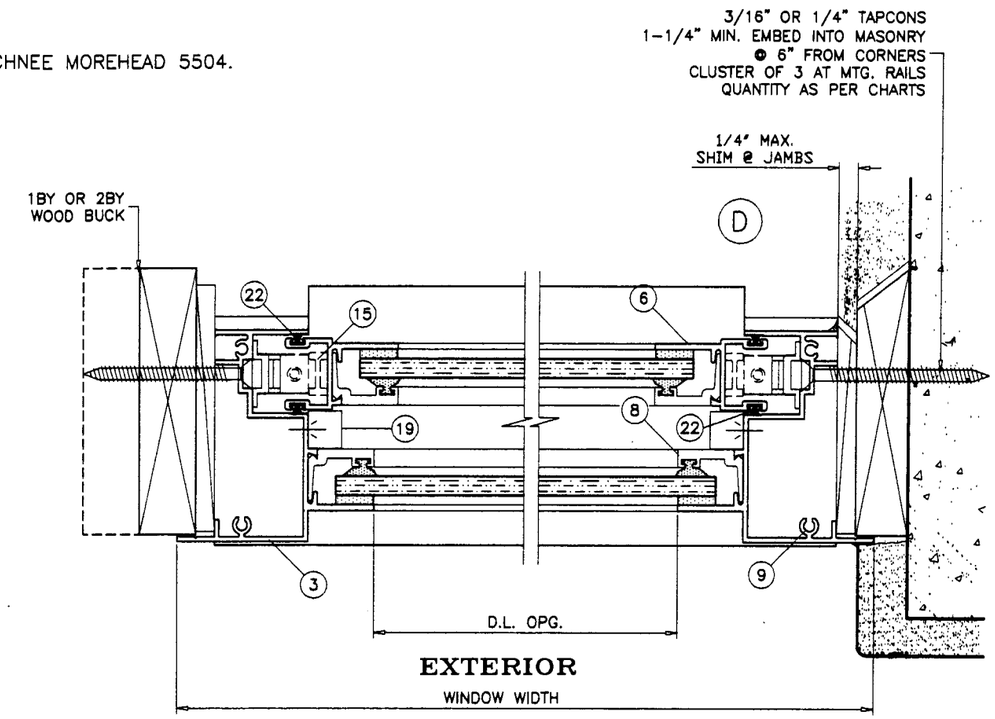

NOTES:

1. THIS PRODUCT IS DESIGNED TO COMPLY WITH THE HIGH VELOCITY HURRICANE ZONE OF THE 2001 FLORIDA BUILDING CODE.
   ALSO FOR WIND LOADS AS PER ASCE 7 USING CORRESPONDING LOADS.
2. WOOD BUCKS BY OTHERS, MUST BE ANCHORED PROPERLY TO TRANSFER LOADS TO THE STRUCTURE.
3. ANCHORS SHALL BE AS LISTED, SPACED AS SHOWN ON DETAILS. ANCHOR EMBEDMENT TO BASE MATERIAL SHALL BE BEYOND WALL DRESSING OR STUCCO.
4. ALL STEEL IN CONTACT WITH ALUMINUM TO BE PLATED OR PAINTED.

Engr: DR. HUMAYOUN FAROOQ
STRUCTURES
FLA PE # 16557

MAY 28 2002

Approved as complying with the Florida Building Code
Date July 18, 2002
NOA# 02-0604.03
Miami Dade Product Control Division
By

AL-FAROOQ CORPORATION
ENGINEERS, PLANNERS & PRODUCT DESIGN
1235 SW 87 AVE
MIAMI, FLORIDA 33174
TEL. (305) 264-8100 FAX. (305) 262-6978
COMP-ANL\W98-106SW

COASTAL-140 IMPACT SINGLE HUNG WINDOW

TRACO SECURITY WINDOWS & DOORS INC.
5100 N.W. 72 AVE.
MIAMI, FL. 33166
TEL. (305) 591-8990

revisions:

no	date	by	description
A	7.10.00	H	7/16" GLASS ADDED
B	05.24.02		UPDATED FOR FBC

date: 12-21-98
scale: 1/2" = 1"
dr. by: HAMID
chk. by:

drawing no.
W98-106

sheet 1 of 5

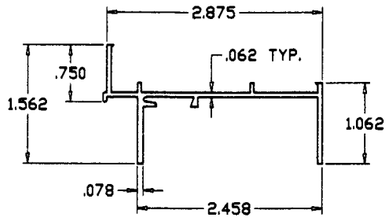

FRAME HEAD

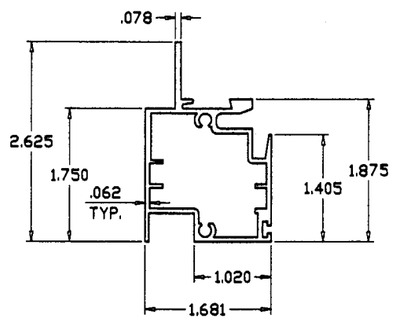

MEETING RAIL

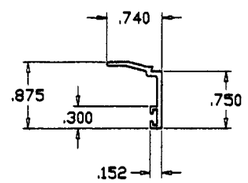

GLASS STOP-7/16" GLASS

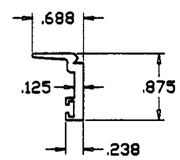

GLASS STOP-1/4" GLASS

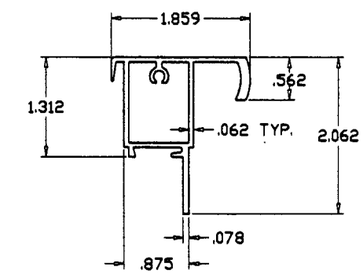

BOTTOM VENT TOP RAIL

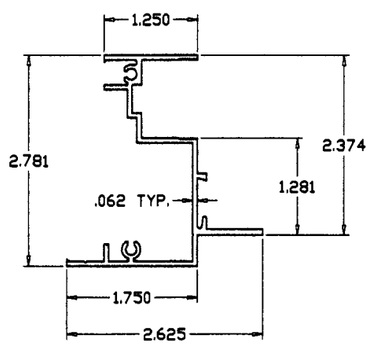

FRAME JAMB

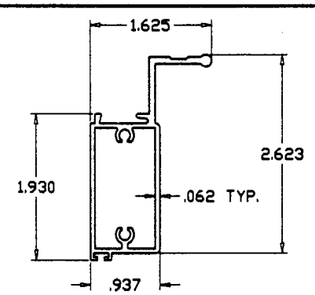

BOTTOM VENT BOTTOM RAIL

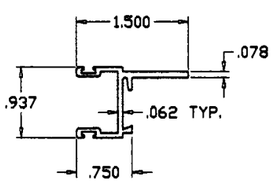

SASH SIDE RAIL

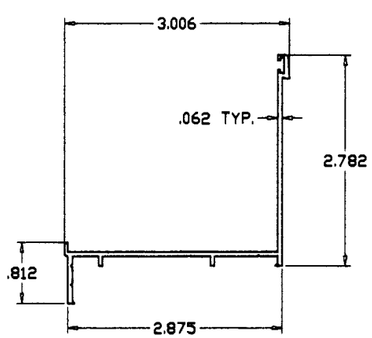

FRAME SILL

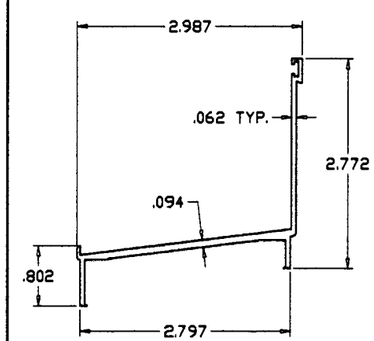

ALT. FRAME SILL

ITEM NO.	PART NUMBER	QUANTITY	DESCRIPTION	MATERIAL	MANF./SUPPLIER/REMARKS
1	050-00-572	1	HEAD	6063-T6	TIFTON
2	050-00-585	1	SILL	6063-T6	TIFTON
2A	050-00-308	1	ALTERNATE SILL	6063-T6	TIFTON
3	050-00-586	2	JAMB	6063-T5	TIFTON
4	050-00-571	1	VENT TOP	6063-T6	TIFTON
5	050-00-548	1	VENT BOTTOM	6063-T5	TIFTON
6	051-00-570	2	VENT SIDE	6063-T6	TIFTON
7	050-00-573	1	MEETING RAIL	6063-T6	TIFTON
8	050-00-569	4/ LITE	GLASS STOP (1/4" GLASS)	6063-T6	TIFTON
9	012-00-832	AS REQD.	FRAME ASSEMBLY SCREW		#8 X 3/4" PHPH SMS
10	050-00-000	AS REQD.	VENT ASSEMBLY SCREW		#8 X 1" PHPH SMS
11	046-00-048	AS REQD.	W'STRIPPING (FABRIC COATED FOAM)		SCHLEGEL Q-LON .375 X .190
12	050-00-759	4/LITE	GLASS STOP (7/16" GLASS)	6063-T6	-
13	050-00-000	AS REQD.	GLAZING TAPE (.090 THICK)		TREMCO #440
14	007-10-016	2	SWEEP LOCK (AT 6-3/4" FROM ENDS)	ZINC CAST	MARBOLLO INT.
15	046-16-030	2	BLOCK AND TACKLE BALANCE		WINDOW COMPONENTS (5/8" BOX)
16	-	-	-		-
17	000-00-000	AS REQD.	GLAZING WEDGE		WIBORG VINYL / WV-8160
18	-	2	REINFORCING BARS FULL LENGTH	STEEL	1-1/2" X 1/4"
19	000-00-000	2	VENT GUIDE	NYLON	1/2" X 7/8" X 3/8"HI. - W/ #6 X 1/2"
20	000-00-000	1	ALUM ANGLE (1X1-1/4X1/8"X3"LG) AT MIDSPAN	6063-T5	FASTENED WITH (2) #10 X 2 SMS
21		AS REQD.	MTG. RAIL ASSEMBLY SCREW		#10 X 1" PHPH SMS
22	047-00-015	AS REQD.	FIN SEAL PILE		ULTRAFAB

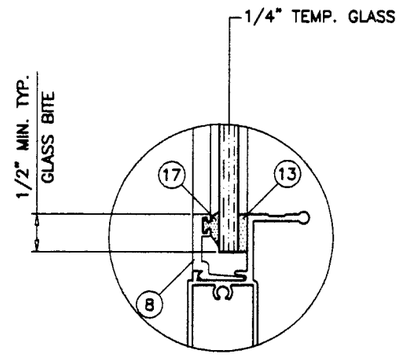

NON-IMPACT RESISTANT

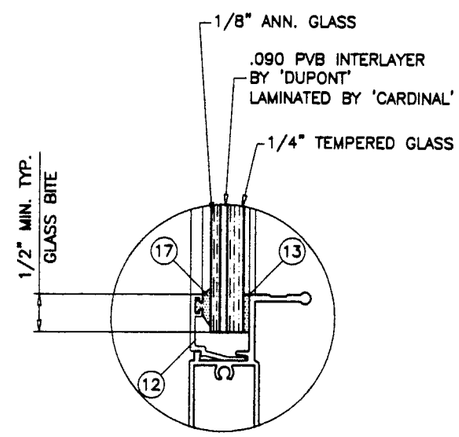

SMALL MISSILE IMPACT RESISTANT

GLAZING OPTIONS

Engr: DR. HUMAYOUN FAROOQ
STRUCTURES
FLA. PE # 16557

MAY 28 2002

Approved as complying with the
Florida Building Code
Date July 18, 2002
NOA# 02-0604.03
Miami Dade Product Control
Division
By

AL-FAROOQ CORPORATION
ENGINEERS, PLANNERS & PRODUCT DESIGN
1235 SW 87 AVE
MIAMI, FLORIDA 33174
TEL (305) 264-8100 FAX. (305) 262-6978
COMP-ANL\W98-106SW

COASTAL-140 IMPACT SINGLE HUNG WINDOW

TRACO SECURITY WINDOWS & DOORS INC.
5100 N.W. 72 AVE.
MIAMI, FL. 33166
TEL (305) 591-8990

revisions:

no	date	by	description

date: 12-21-98
scale: 1/2" = 1"
dr. by: HAMID
chk. by:

drawing no.
W98-106

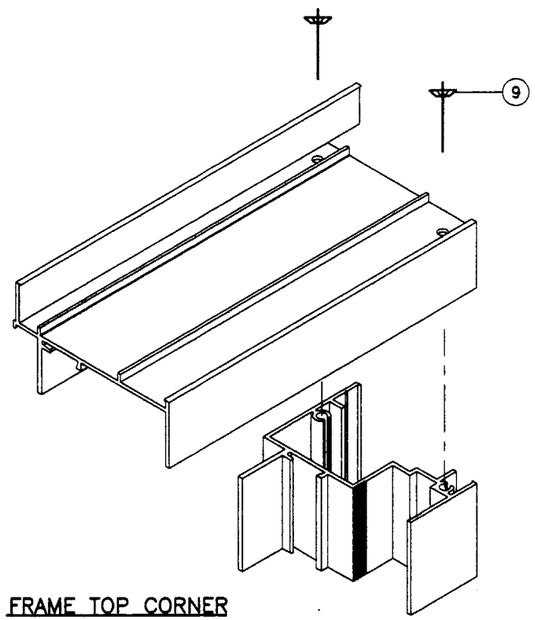

FRAME TOP CORNER

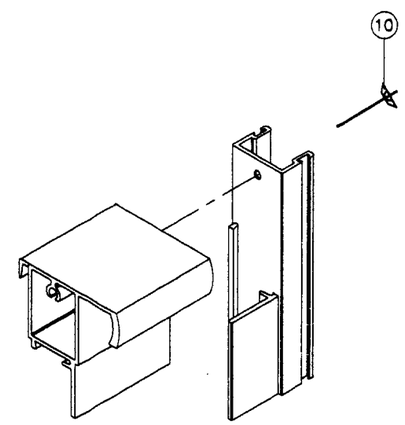

VENT TOP CORNER

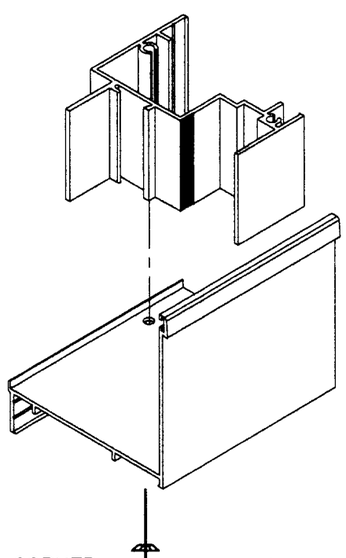

FRAME BOTTOM CORNER

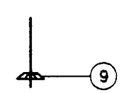

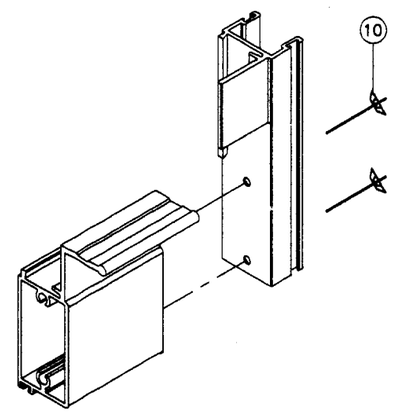

VENT BOTTOM CORNER

Engr: DR. HUMAYOUN FAROOQ
STRUCTURES
FLA. PE # 16557

MAY 28 2002

Approved as complying with the
Florida Building Code
Date July 18, 2002
NOA# 02-0604.03
Miami Dade Product Control
Division
By Renewal

AL-FAROOQ CORPORATION
ENGINEERS, PLANNERS & PRODUCT DESIGN
1235 SW 87 AVE
MIAMI, FLORIDA 33174
TEL. (305) 264-8100 FAX. (305) 262-6978

COMP-ANL\W98-106SW

COASTAL-140 IMPACT SINGLE HUNG WINDOW

TRACO SECURITY WINDOWS & DOORS INC.
5100 N.W. 72 AVE.
MIAMI, FL. 33166
TEL (305) 591-8990

revisions:

no	date	by	description

date: 12-21-98
scale: 1/2" = 1"
dr. by: HAMID
chk. by:

drawing no.
W98-106

sheet 3 of 5

UNREINFORCED MEETING RAIL					
DESIGN LOAD CAPACITY - PSF					
WINDOW DIMS.		EQUAL LITES & UNEQUAL LITES (FULL VIEW)			
		3/16" TAPCONS		1/4" TAPCONS	
WIDTH	HEIGHT	EXT. (+)	INT. (-)	EXT. (+)	INT. (-)
19-1/8"	38-3/8" (5) *	102.0	137.0	102.0	137.0
26-1/2"		102.0	137.0	102.0	137.0
37"		102.0	137.0	102.0	137.0
53-1/8"		102.0	136.3	102.0	137.0
19-1/8"	50-5/8" (5)	102.0	137.0	102.0	137.0
26-1/2"		102.0	137.0	102.0	137.0
37"		102.0	137.0	102.0	137.0
53-1/8"		102.0	103.3	102.0	137.0
19-1/8"	58" (7)	102.0	137.0	102.0	137.0
26-1/2"		102.0	137.0	102.0	137.0
37"		102.0	137.0	102.0	137.0
53-1/8"		102.0	126.3	102.0	137.0
19-1/8"	63" (7)	102.0	137.0	102.0	137.0
26-1/2"		102.0	137.0	102.0	137.0
37"		102.0	137.0	102.0	137.0
53-1/8"		102.0	116.3	102.0	137.0
19-1/8"	74-1/4" (7)	102.0	137.0	102.0	137.0
26-1/2"		102.0	137.0	102.0	137.0
37"		102.0	137.0	102.0	137.0
53-1/8"		102.0	98.6	102.0	124.7
19-1/8"	84" (7)	102.0	137.0	102.0	137.0
26-1/2"		102.0	137.0	102.0	137.0
37"		102.0	125.2	102.0	137.0
53-1/8"		102.0	87.2	102.0	124.7

* NO. IN PARENTHESIS INDICATE NO. OF ANCHORS PER JAMB

1/4' TEMPERED GLASS
NON IMPACT RESISTANT WINDOWS
SHUTTERS REQUIRED FOR ALL INSTALLATIONS.

7/16" LAMINATED GLASS
SMALL MISSILE IMPACT RESISTANT WINDOWS
SHUTTERS NOT REQUIRED FOR INSTALLATIONS
ABOVE 30 FT. OF GRADE.

SEE SHEET 2 FOR GLAZING DETAILS.

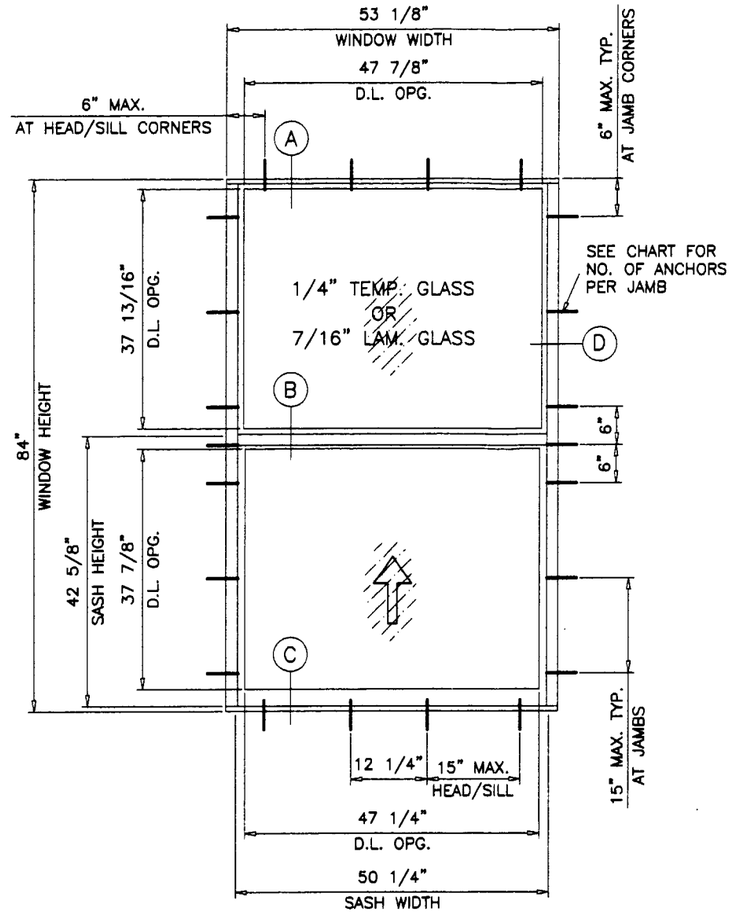

TYPICAL ELEVATION
EQUAL LITES

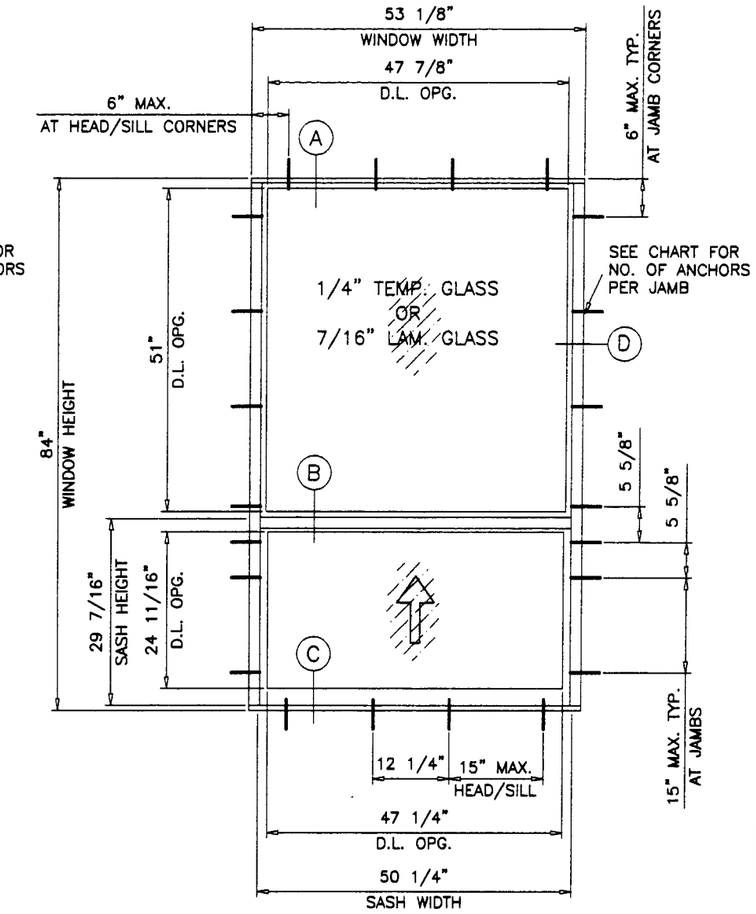

TYPICAL ELEVATION
UNEQUAL LITES (FULL VIEW)

UN-REINFORCED MEETING RAIL
SEE DETAIL SHEET 1

Engr: DR. HUMAYOUN FARCOQ
STRUCTURES
FLA. PE # 16537

MAY 28 2002

Approved as complying with the
Florida Building Code
Date July 18, 2002
NOA# 02-0604.03
Miami Dade Product Control
Division
By
Renewed

AL-FAROOQ CORPORATION
ENGINEERS, PLANNERS & PRODUCT DESIGN
1235 SW 87 AVE
MIAMI, FLORIDA 33174
TEL. (305) 264-8100 FAX. (305) 262-6978
COMP-ANL\W98-106SW

COASTAL-140 IMPACT SINGLE HUNG WINDOW

TRACO SECURITY WINDOWS & DOORS INC.
5100 N.W. 72 AVE.
MIAMI, FL. 33166
TEL (305) 591-8990

revisions:

no	date	by	description
B	05.24.02		LOAD CAPACITY CHART REV.

date: 12-21-98
scale: 1/2" = 1"
dr. by: HAMID
chk. by:

drawing no.
W98-106

REINFORCED MEETING RAIL			
DESIGN LOAD CAPACITY - PSF			
WINDOW DIMS.		EQUAL LITES 1/4" TAPCONS	
WIDTH	HEIGHT	EXT. (+)	INT. (-)
19-1/8"	38-3/8" (6) *	102.0	210.0
26-1/2"		102.0	210.0
37"		102.0	210.0
53-1/8"		102.0	210.0
19-1/8"	50-5/8" (8)	102.0	210.0
26-1/2"		102.0	210.0
37"		102.0	210.0
53-1/8"		102.0	210.0
19-1/8"	58" (10)	102.0	210.0
26-1/2"		102.0	210.0
37"		102.0	210.0
53-1/8"		102.0	210.0
19-1/8"	63" (10)	102.0	210.0
26-1/2"		102.0	210.0
37"		102.0	210.0
53-1/8"		102.0	210.0
19-1/8"	74-1/4" (12)	102.0	210.0
26-1/2"		102.0	210.0
37"		102.0	210.0
53-1/8"		102.0	210.0
19-1/8"	84" (12)	102.0	210.0
26-1/2"		102.0	210.0
37"		102.0	210.0
53-1/8"		102.0	210.0

REINFORCED MEETING RAIL			
DESIGN LOAD CAPACITY - PSF			
WINDOW DIMS.		UNEQUAL LITES (FULL VIEW) 1/4" TAPCONS	
WIDTH	HEIGHT	EXT. (+)	INT. (-)
19-1/8"	63" (10)	102.0	210.0
26-1/2"		102.0	210.0
37"		102.0	210.0
53-1/8"		102.0	210.0
19-1/8"	74-1/4" (12)	102.0	210.0
26-1/2"		102.0	210.0
37"		102.0	210.0
53-1/8"		102.0	210.0
19-1/8"	84" (12)	102.0	210.0
26-1/2"		102.0	210.0
37"		102.0	210.0
53-1/8"		102.0	181.6

* NO. IN PARENTHESIS INDICATE NO. OF ANCHORS PER JAMB

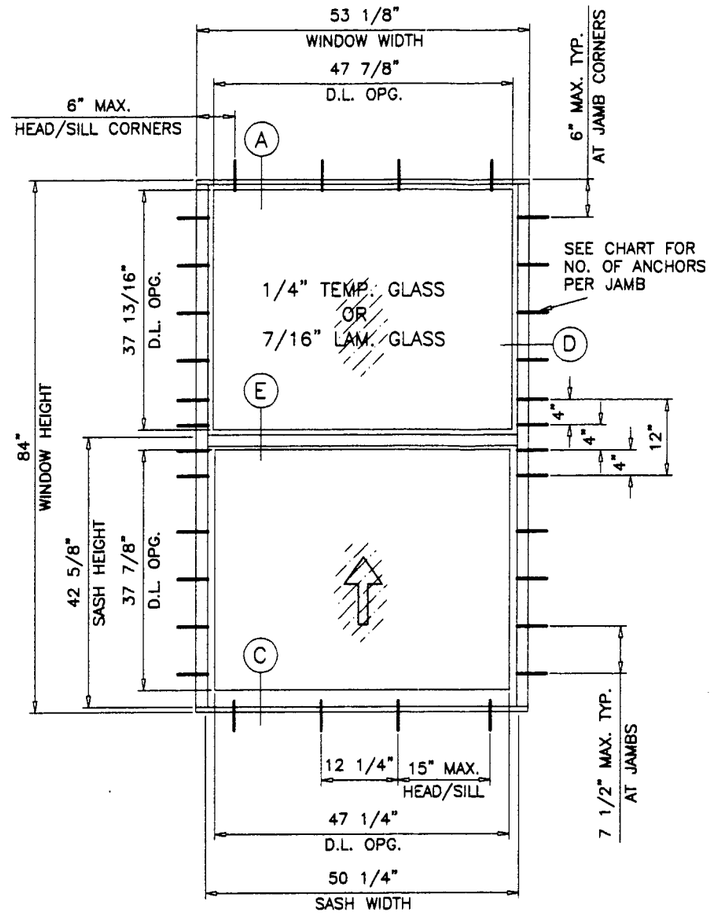

TYPICAL ELEVATION
EQUAL LITES

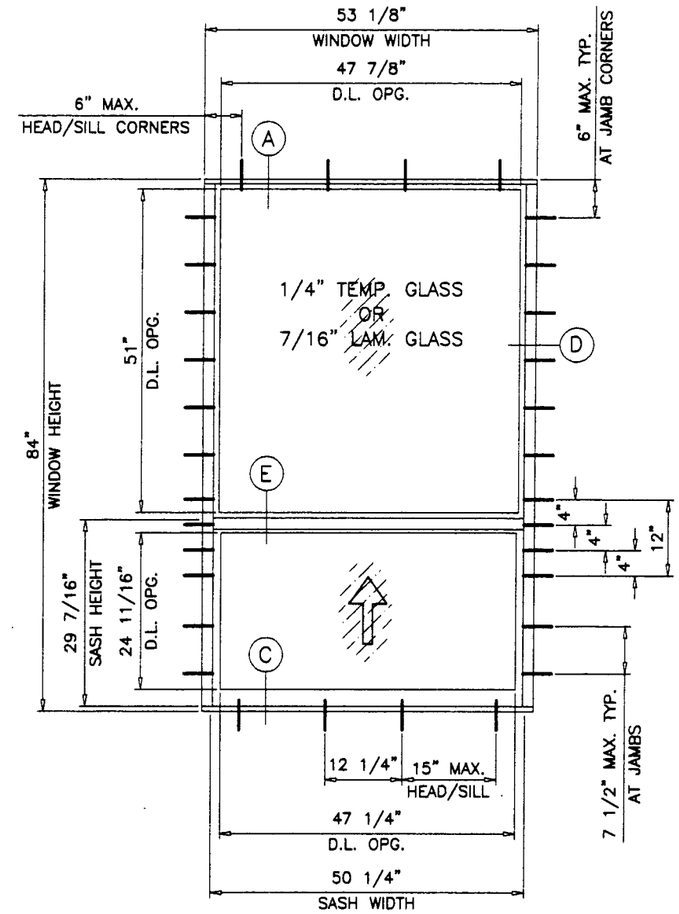

TYPICAL ELEVATION
UNEQUAL LITES (FULL VIEW)

REINFORCED MEETING RAIL
SEE DETAIL SHEET 1

1/4' TEMPERED GLASS
NON IMPACT RESISTANT WINDOWS
SHUTTERS REQUIRED FOR ALL INSTALLATIONS.

7/16" LAMINATED GLASS
SMALL MISSILE IMPACT RESISTANT WINDOWS
SHUTTERS NOT REQUIRED FOR INSTALLATIONS
ABOVE 30 FT. OF GRADE.

SEE SHEET 2 FOR GLAZING DETAILS.

Engr: DR. HUMAYOUN FAROOQ
STRUCTURES
FLA PE # 16557

MAY 28 2002

Approved as complying with the
Florida Building Code
Date July 18, 2002
NOA# 02-0604.03
Miami Dade Product Control
Division
By
Renewal

AL-FAROOQ CORPORATION
ENGINEERS, PLANNERS & PRODUCT DESIGN
1235 SW 87 AVE
MIAMI, FLORIDA 33174
TEL. (305) 264-8100 FAX. (305) 262-6978
COMP-ANL\W98-106SW

COASTAL-140 IMPACT SINGLE HUNG WINDOW

TRACO SECURITY WINDOWS & DOORS INC.
5100 N.W. 72 AVE.
MIAMI, FL. 33166
TEL. (305) 591-8990

revisions:

no	date	by	description
B	05.24.02		LOAD CAPACITY CHART REV.

date: 12-21-98
scale: 1/2" = 1"
dr. by: HAMID
chk. by:

drawing no.
W98-106

sheet 5 of 5