MIAMI-DADE

BUILDING CODE COMPLIANCE OFFICE (BCCO)
PRODUCT CONTROL DIVISION

MIAMI-DADE COUNTY, FLORIDA
METRO-DADE FLAGLER BUILDING
140 WEST FLAGLER STREET, SUITE 1603
MIAMI, FLORIDA 33130-1563
(305) 375-2901 FAX (305) 375-2908

NOTICE OF ACCEPTANCE (NOA)

Eagle Window & Door, Inc.
2045 Kerper Boulevard
Dubuque, IA 52004

SCOPE:
This NOA is being issued under the applicable rules and regulations governing the use of construction materials. The documentation submitted has been reviewed by Miami-Dade County Product Control Division and accepted by the Board of Rules and Appeals (BORA) to be used in Miami Dade County and other areas where allowed by the Authority Having Jurisdiction (AHJ).

This NOA shall not be valid after the expiration date stated below. The Miami-Dade County Product Control Division (In Miami Dade County) and/or the AHJ (in areas other than Miami Dade County) reserve the right to have this product or material tested for quality assurance purposes. If this product or material fails to perform in the accepted manner, the manufacturer will incur the expense of such testing and the AHJ may immediately revoke, modify, or suspend the use of such product or material within their jurisdiction. BORA reserves the right to revoke this acceptance, if it is determined by Miami-Dade County Product Control Division that this product or material fails to meet the requirements of the applicable building code.

This product is approved as described herein, and has been designed to comply with the High Velocity Hurricane Zone of the Florida Building Code.

DESCRIPTION: Series 2000 Aluminum Clad Sliding Wood French Door

APPROVAL DOCUMENT: Drawing No. S-2144, titled "Alum Clad Sliding French Door w/ & w/out Sidelite up to 12-0 x 8-0 Unit", sheets 1 through 6, prepared by RW Building Consultants, Inc., dated 5/23/02, bearing the Miami-Dade County Product Control Approval stamp with the Notice of Acceptance number and approval date by the Miami-Dade County Product Control Division.

MISSILE IMPACT RATING: Large and Small Missile Impact

LABELING: Each unit shall bear a permanent label with the manufacturer's name or logo, city, state and following statement: "Miami-Dade County Product Control Approved", unless otherwise noted herein.

RENEWAL of this NOA shall be considered after a renewal application has been filed and there has been no change in the applicable building code negatively affecting the performance of this product.

TERMINATION of this NOA will occur after the expiration date or if there has been a revision or change in the materials, use, and/or manufacture of the product or process. Misuse of this NOA as an endorsement of any product, for sales, advertising or any other purposes shall automatically terminate this NOA. Failure to comply with any section of this NOA shall be cause for termination and removal of NOA.

ADVERTISEMENT: The NOA number preceded by the words Miami-Dade County, Florida, and followed by the expiration date may be displayed in advertising literature. If any portion of the NOA is displayed, then it shall be done in its entirety.

INSPECTION: A copy of this entire NOA shall be provided to the user by the manufacturer or its distributors and shall be available for inspection at the job site at the request of the Building Official.
This NOA consists of this page 1 as well as approval document mentioned above.
The submitted documentation was reviewed by **Theodore Berman, P.E.**

PRODUCT CONTROL ACCEPTED

NOA No 02-0605.01
Expiration Date: August 1, 2007
Approval Date: August 1, 2002

EAGLE WINDOW & DOOR

SERIES 2000 CLAD SLIDING FRENCH DOOR
UP TO 12'0 x 8'0 WITH OR WITHOUT SIDELITE

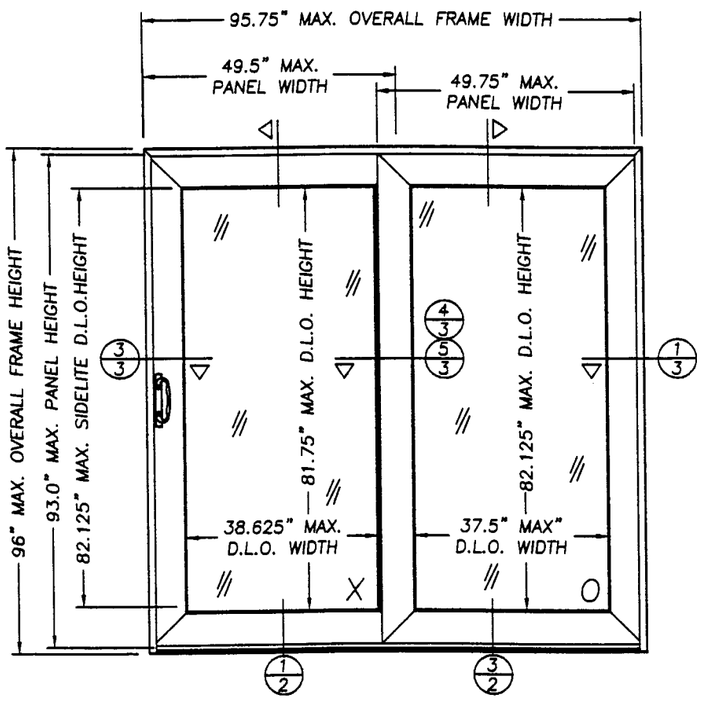

SLIDING FRENCH DOOR VIEWED FROM EXTERIOR

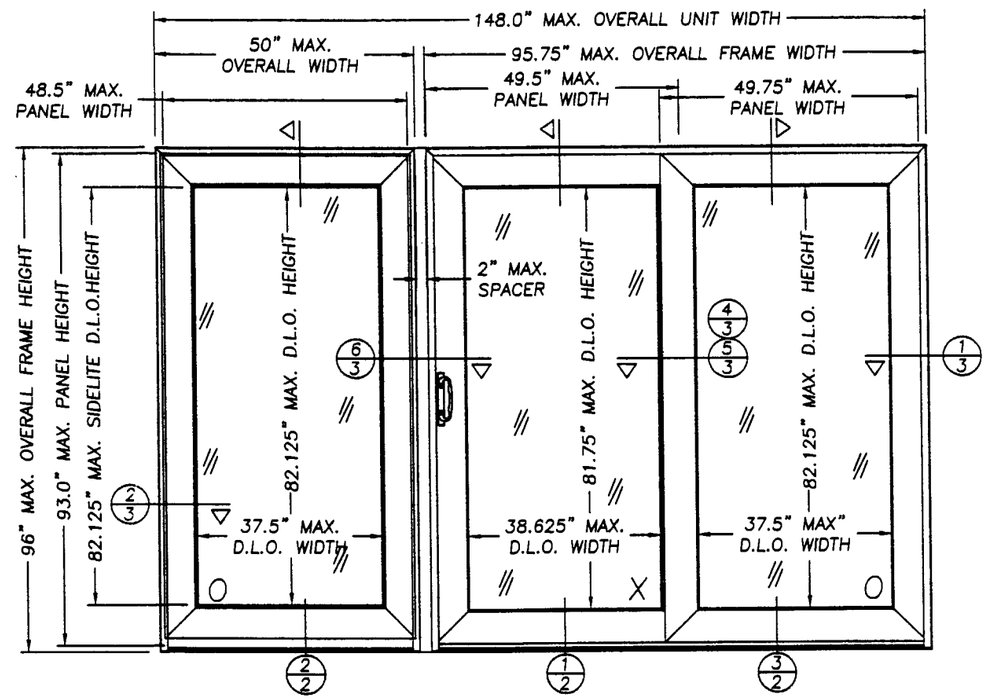

SLIDING FRENCH DOOR WITH SIDELITE VIEWED FROM EXTERIOR

GENERAL NOTES

1. THIS PRODUCT IS DESIGNED TO COMPLY WITH THE FLORIDA BUILDING CODE.
2. WOOD BUCKS BY OTHERS, MUST BE ANCHORED PROPERLY TO TRANSFER THE LOADS TO THE STRUCTURE.
3. PRODUCT ANCHORS SHALL BE AS LISTED AND SPACED AS SHOWN ON DETAILS. ANCHOR EMBEDMENT TO BASE MATERIAL SHALL BE BEYOND WALL DRESSING OR STUCCO.
4. THIS PRODUCT MEETS THE WATER REQUIREMENTS FOR "HIGH VELOCITY HURRICANE ZONES".
5. THIS SYSTEM MEETS WINDBORNE DEBRIS CRITERIA AS PROSCRIBED IN SECTION 1626.1 OF THE FLORIDA BUILDING CODE.

DESIGN PRESSURE RATING		
UNIT TYPE	WHERE WATER INFILTRATION REQUIREMENT IS NEEDED	
SLIDING FRENCH DOOR WITH SIDELITE	+ 60.0 PSF	− 60.0 PSF
SLIDING FRENCH DOOR WITHOUT SIDELITE	+ 60.0 PSF	− 60.0 PSF

TABLE OF CONTENTS

SHEET #	DESCRIPTION
1	TYPICAL ELEVATIONS & GENERAL NOTES
2	VERTICAL CROSS SECTIONS & BILL OF MATERIAL
3	HORIZONTAL CROSS SECTIONS & NOTES
4	ANCHORING LOCATIONS & GLAZING DETAILS
5	UNIT COMPONENTS

Approved as complying with the Florida Building Code
Date August 1, 2002
NOA# 02-0605.01
Miami Dade Product Control Division
By Theodore Barman

EAGLE WINDOW & DOOR, INC.
375 EAST 9th St.
DUBUQUE,, IA 52004-1072
PH. 319.556.4408

PRODUCT: ALUM.CLAD SLIDING FRENCH DOOR W/ & W/OUT SIDELITE UP TO 12-0 x 8-0 UNIT

PART OR ASSEMBLY: TYPICAL ELEVATIONS & GENERAL NOTES

NO.	DATE	REVISIONS	BY

RW BUILDING CONSULTANTS, INC.
813.684.3831

DATE: 5/23/02
SCALE: N.T.S.
DWG. BY: WLN
CHK. BY: RW
DRAWING NO.: S-2144
SHEET 1 OF 6

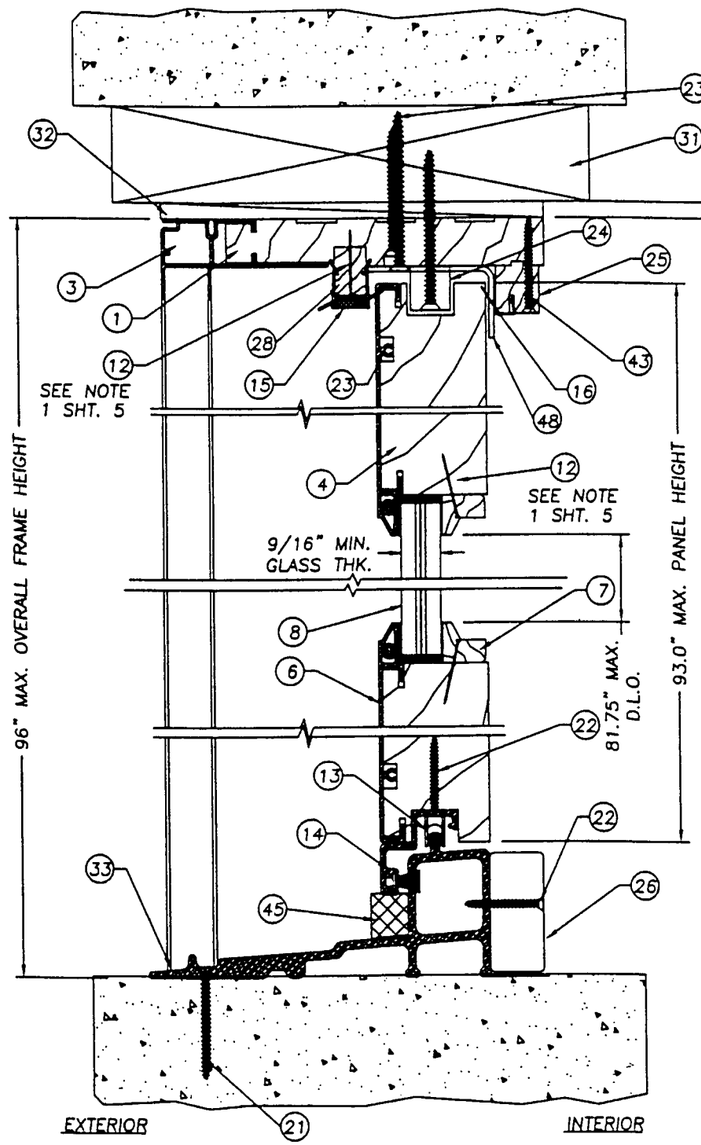

1/2 VERTICAL CROSS SECTION
SLIDING PANEL

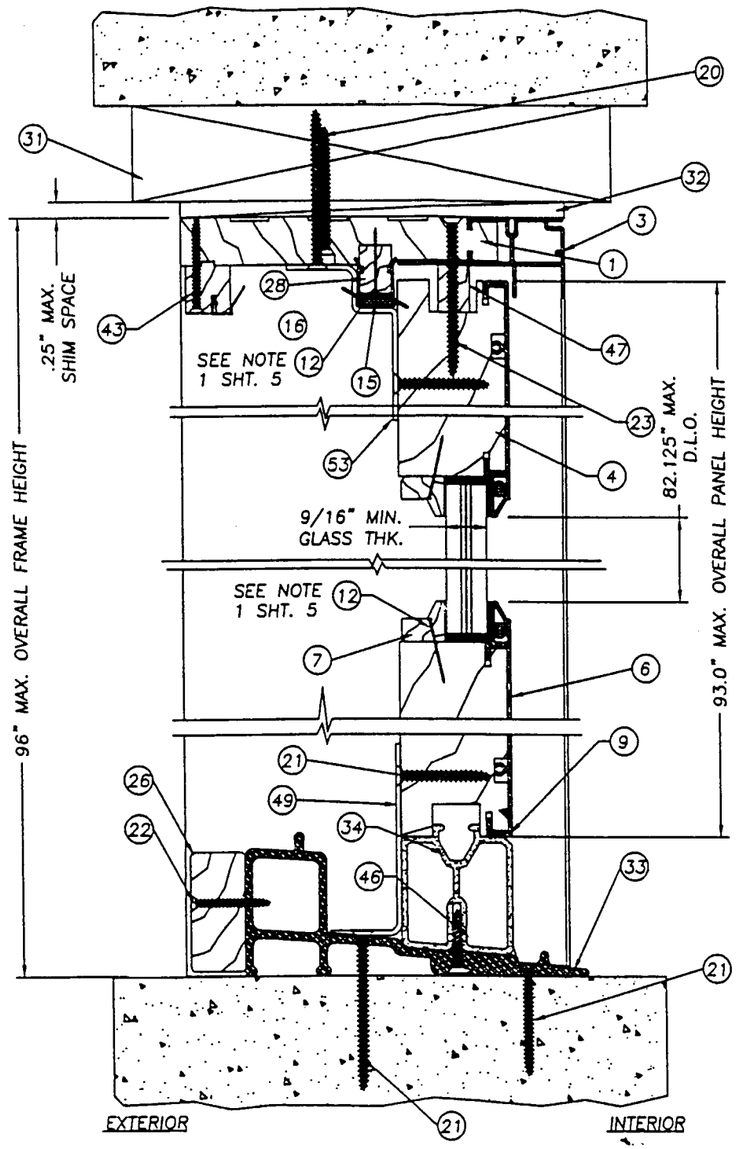

2/2 VERTICAL CROSS SECTION
FIXED PANEL

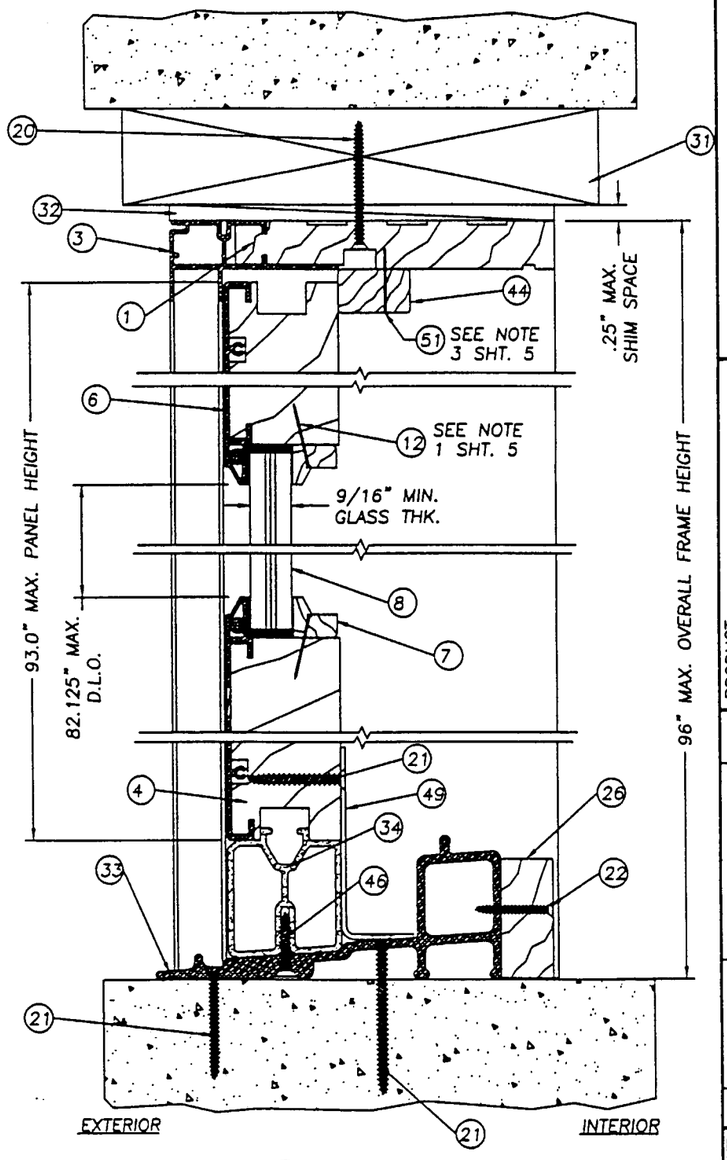

3/2 VERTICAL CROSS SECTION
SIDELITE PANEL

EAGLE WINDOW & DOOR, INC.
375 EAST 9th St.
DUBUQUE, IA 52004-1072
PH. 319.556.4408

PRODUCT: ALUM. CLAD SLIDING FRENCH DOOR W/ & W/OUT SIDELITE UP TO 12-0 x 8-0 UNIT

PART OR ASSEMBLY:

VERTICAL CROSS SECTIONS

NO.	DATE	REVISIONS	BY

RW BUILDING CONSULTANTS, INC.
813.684.3831

Approved as complying with the Florida Building Code
Date August 1, 2002
NOA# 02-0605.01
Miami Dade Product Control Division
By Glenda Berman

DATE: 5/23/02
SCALE: N.T.S.
DWG. BY: WLN
CHK. BY: RW
DRAWING NO.: S-2144
SHEET 2 OF 6

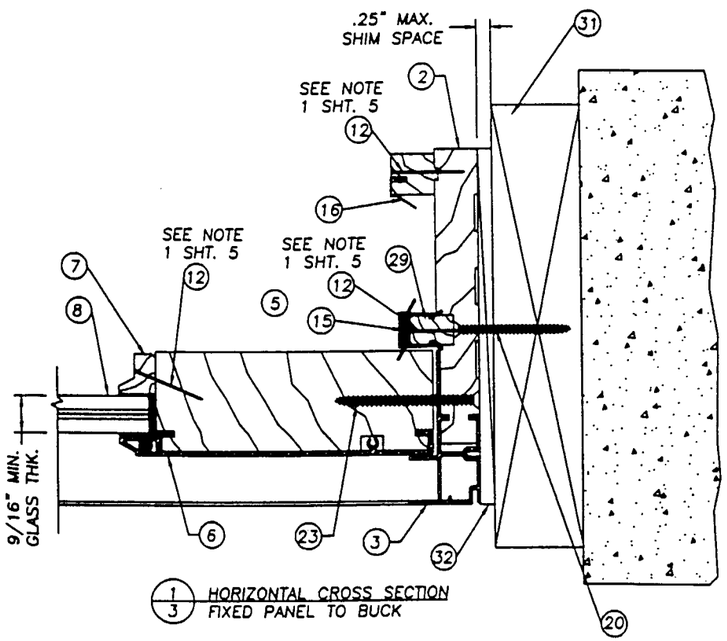

1/3 HORIZONTAL CROSS SECTION
FIXED PANEL TO BUCK

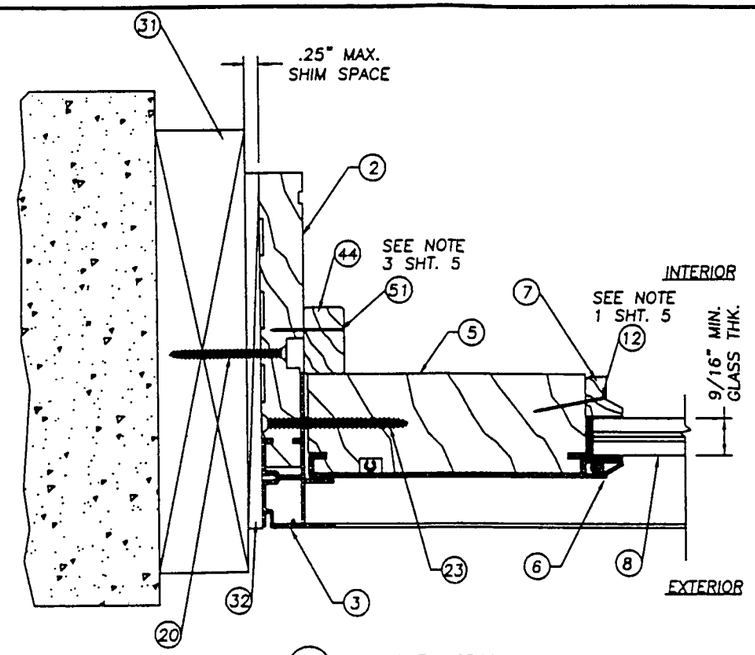

2/3 HORIZONTAL CROSS SECTION
SIDELITE PANEL TO BUCK

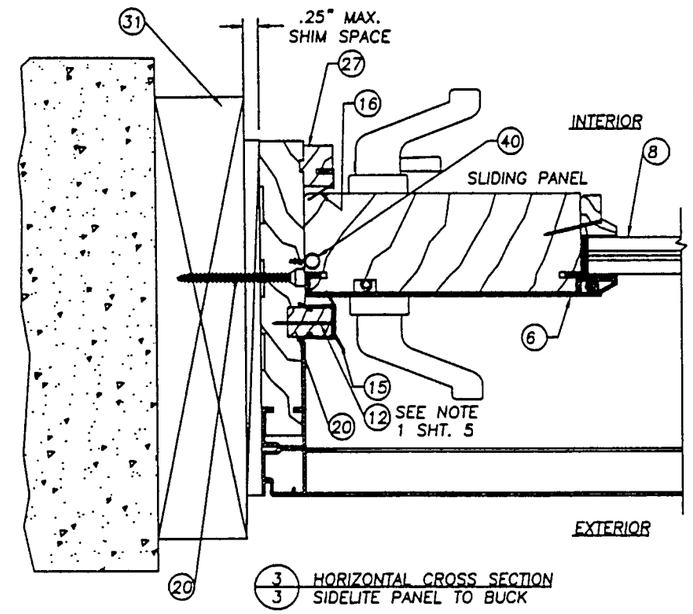

3/3 HORIZONTAL CROSS SECTION
SIDELITE PANEL TO BUCK

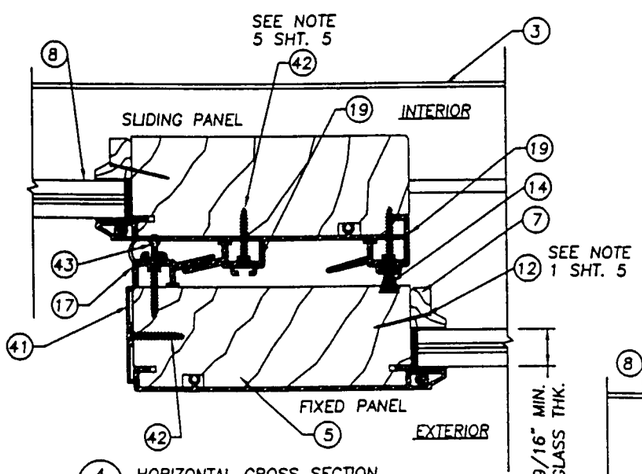

4/3 HORIZONTAL CROSS SECTION
SLIDING PANEL & FIXED PANEL

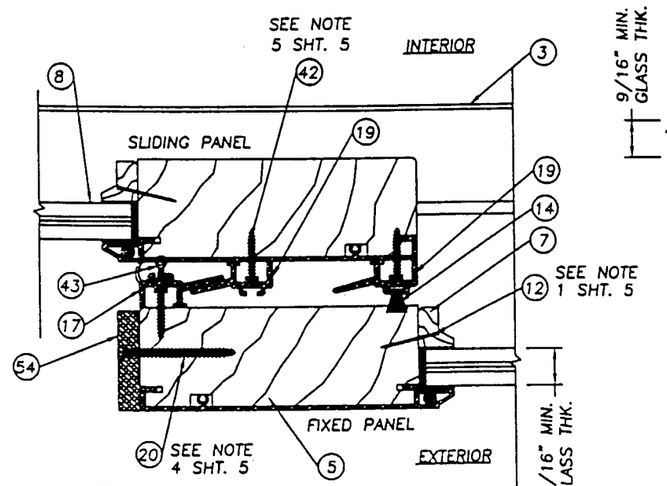

5/3 HORIZONTAL CROSS SECTION
SLIDING PANEL & FIXED PANEL

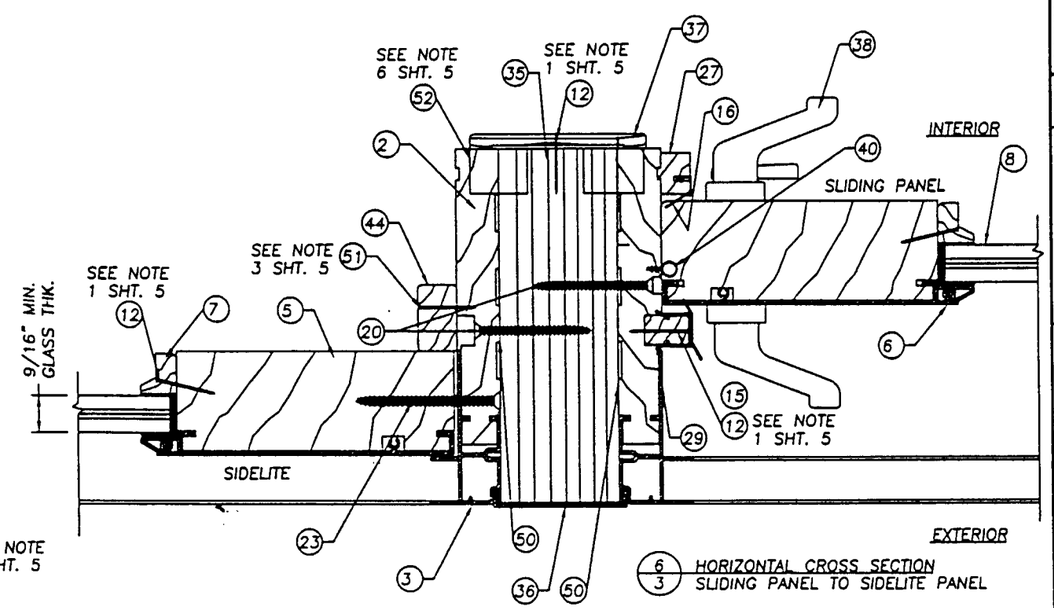

6/3 HORIZONTAL CROSS SECTION
SLIDING PANEL TO SIDELITE PANEL

EAGLE WINDOW & DOOR, INC.
375 EAST 9th St.
DUBUQUE,, IA 52004-1072
PH. 319.556.4408

PRODUCT: ALUM. CLAD SLIDING FRENCH DOOR W/ & W/OUT SIDELITE UP TO 12-0 x 8-0 UNIT

PART OR ASSEMBLY: HORIZONTAL CROSS SECTIONS

NO.	DATE	REVISIONS	BY

RW BUILDING CONSULTANTS, INC.
813.684.3831

Approved as complying with the Florida Building Code
Date August 1, 2002
NOA# 02-0605.01
Miami Dade Product Control Division
By Theodore Kerman

DATE: 5/23/02
SCALE: N.T.S.
DWG. BY: WLN
CHK. BY: RW
DRAWING NO.: S-2144
SHEET 3 OF 6

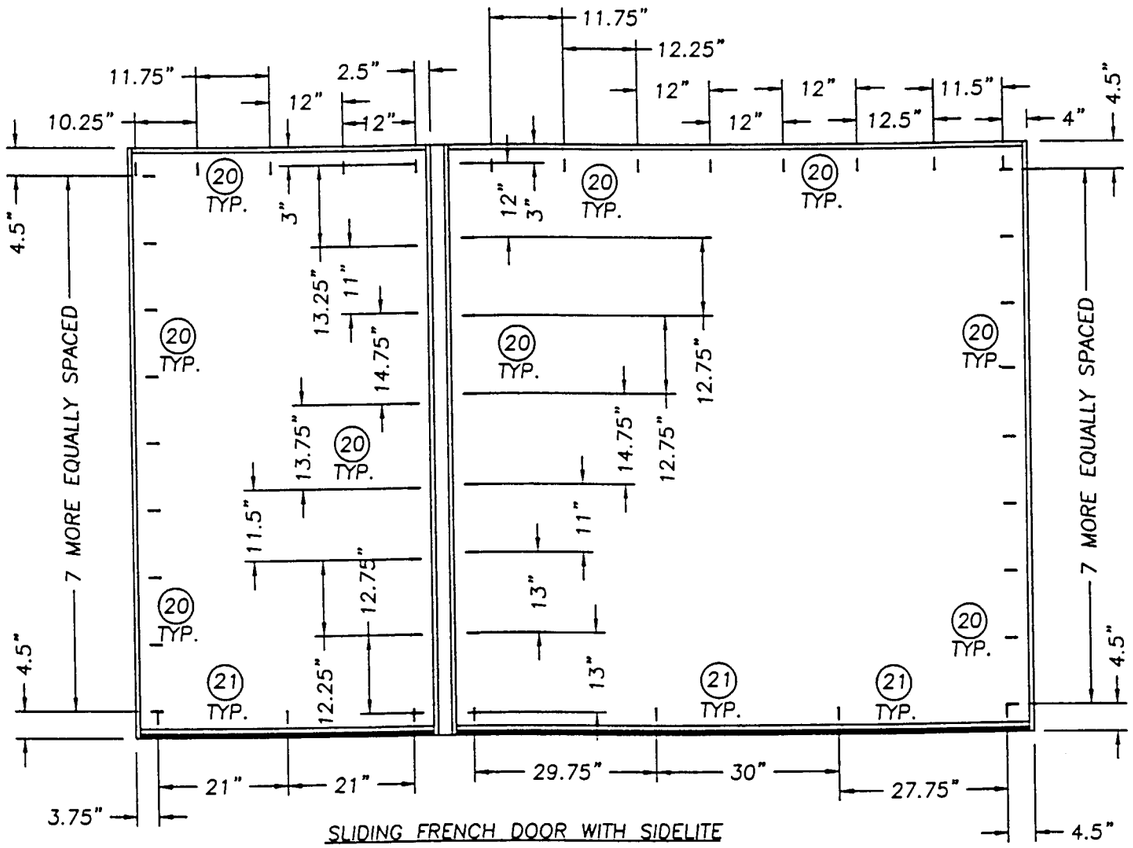

SLIDING FRENCH DOOR WITH SIDELITE

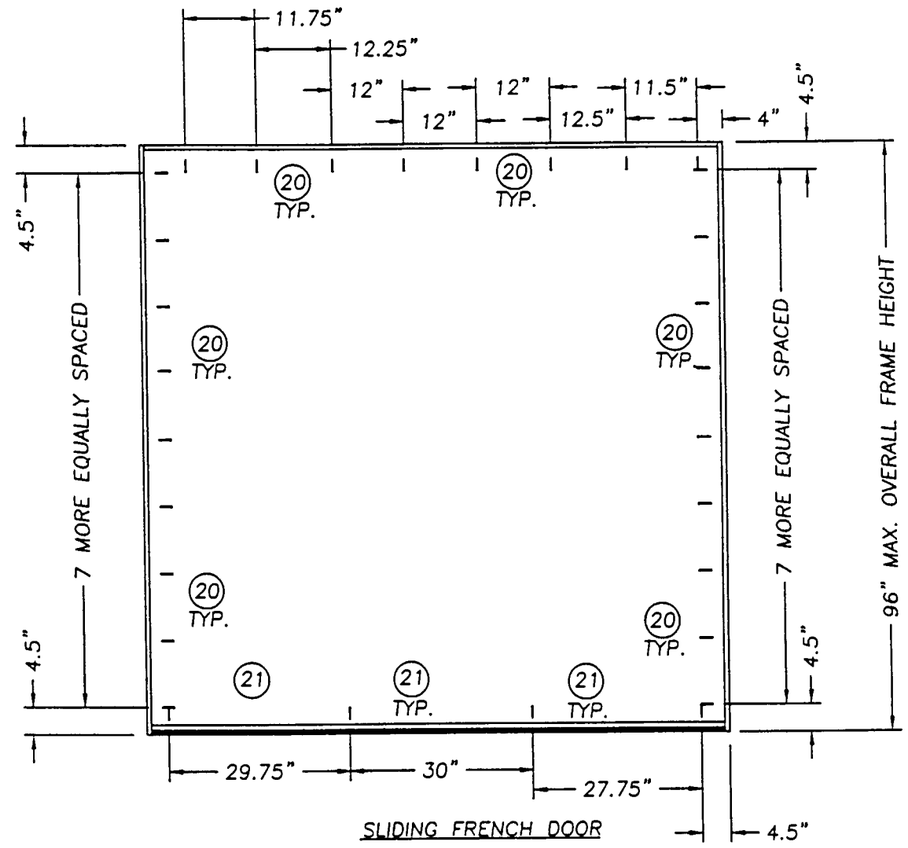

SLIDING FRENCH DOOR

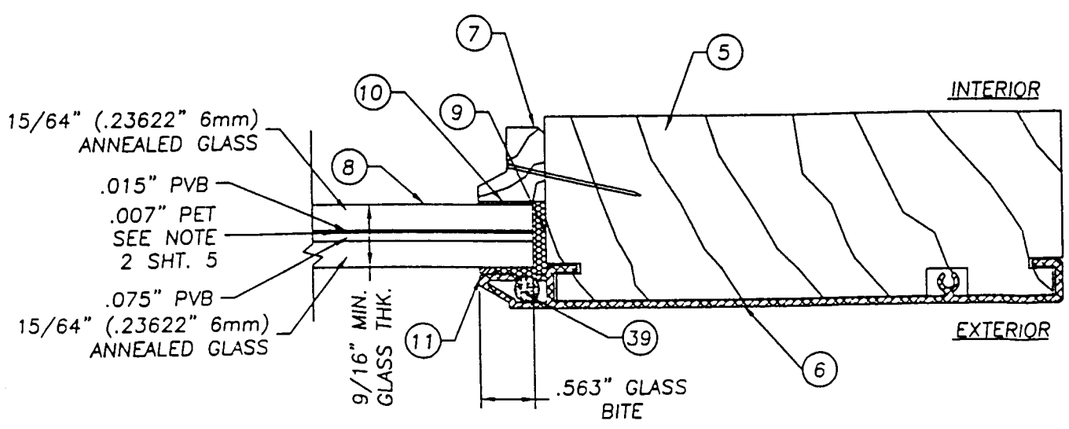

GLAZING DETAIL

ALL DIMENSION ARE FROM THE INTERIOR SIDE AND EDGES OF THE WOOD FRAME.

Approved as complying with the Florida Building Code
Date August 1, 2002
NOA# 02-0605.01
Miami Dade Product Control Division
By: Blanche Barnes

EAGLE WINDOW & DOOR, INC.
375 EAST 9th St.
DUBUQUE,, IA 52004-1072
PH. 319.556.4408

PRODUCT: ALUM. CLAD SLIDING FRENCH DOOR W/ & W/OUT SIDELITE UP TO 12-0 X 8-0 UNIT

PART OR ASSEMBLY: ANCHORING LOCATIONS & GLAZING DETAIL

NO.	DATE	BY

REVISIONS

RW BUILDING CONSULTANTS, INC.
813.684.3831

DATE: 5/23/02
SCALE: N.T.S.
DWG. BY: WLN
CHK. BY: RW
DRAWING NO.: S-2144
SHEET 4 OF 6

NOTES:

1. SPACING FOR ITEM #12 THE BRAD TRIM NAIL IS AS FOLLOWS; 3" IN FROM ALL CORNERS AND A MAXIMUM OF 6" MAX. O.C.
2. THE .007" PET FILM IS TRIMMED FLUSH WITH THE EDGE OF THE GLASS.
3. SPACING FOR ITEM #51 IS AS FOLLOWS: 4" FROM ALL CORNERS AND A MAX. OF 6" O.C.
4. SPACING FOR ITEM #20 THE #8 x 2" PFH WOOD SCREW ATTACHING #54 THE FIXED PANEL REINFORCEMENT BAR TO THE EDGE OF THE FIXED PANEL IS AS FOLLOWS FROM THE TOP DOWN: 2.0", 11.5", 22.5", 33.125" 44.25", 55.625", 66.75", 78.0", 89.25" & 94.5".
5. SPACING FOR ITEM #42 THE #6 x 12 PHILLIPS FLAT HEAD SCREW ATTACHING THE PANEL INTERLOCK TO THE PANEL IS AS FOLLOWS: FROM THE TOP DOWN 1.0" AND A MAX. OF 4.5" O.C.
6. SPACING FOR ITEM #52 THE CORRUGATED FASTENER IS AS FOLLOWS: 2" DOWN FROM THE TOP AND 5" O.C. THERE ARE (2) ROWS CONNECTING THE FRAMES TO THE MULLION ON THE INTERIOR SIDE ONLY. THE WOOD FRAMES ARE GLUED TO ITEM #35 (THE MULLION SPACER) WITH ITEM #50 AT ASSEMBLY.

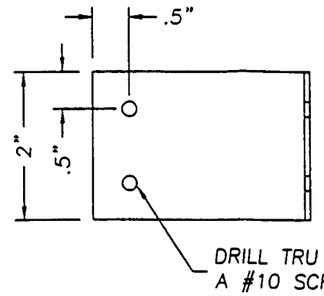

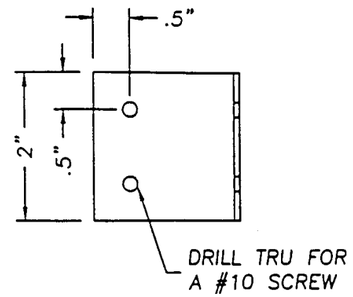

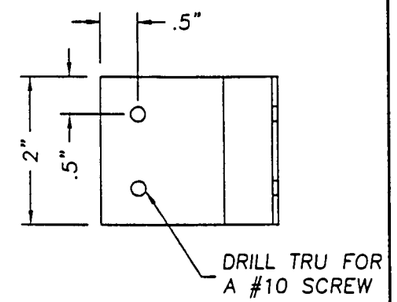

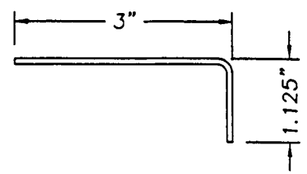

(49) FIXED/SIDELITE STABILIZER
BOTTOM .080" STEEL

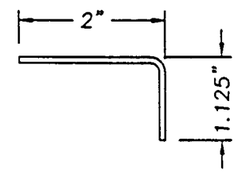

(48) SLIDING DOOR STABILIZER
080" STEEL

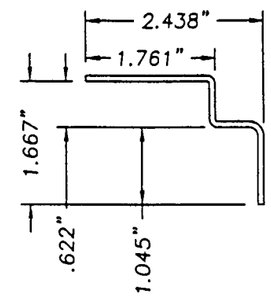

(53) FIXED PANEL STABILIZER
TOP .080" STEEL

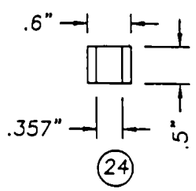

(24) SLIDING PANEL TOP SLIDE
.60" W. x .50" H. x 4.0" L
.117" THK. EXTRUDED PVC

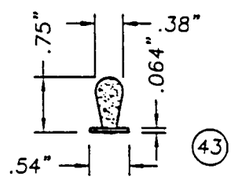

(43) COMPRESSION WEATHERSTRIP
SCHLEGEL #Q375T270

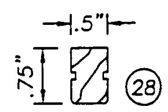

(28) HEAD PARTING STOP
FINGER JOINTED PINE

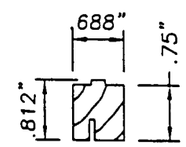

HEAD INTERIOR STOP
CLEAR PINE (25)

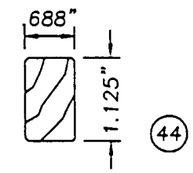

(44) SIDELITE PANEL INTERIOR
STOP, CLEAR PINE

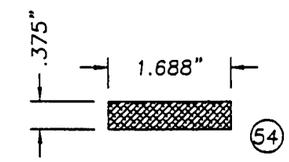

(54) FIXED PANEL REINFORCEMENT
BAR, ALUM. STOCK BAR

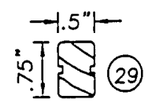

(29) SIDE PARTING STOP
FINGER JOINTED PINE

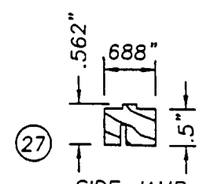

(27) SIDE JAMB
INTERIOR STOP
CLEAR PINE

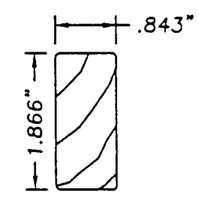

SILL EXTENSION (26)
INTERIOR SIDE, CLEAR OAK

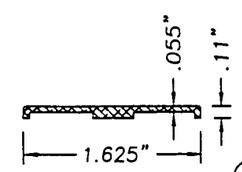

(41) FIXED PANEL STILE CAP
EXTRUDED ALUM. .055" THK.

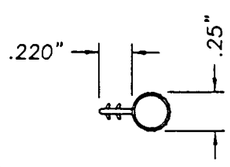

(40) BULB WEATHERSTRIP SIDE
JAMB HANDLE SIDE, VINYL
SCHLEGEL #AP325

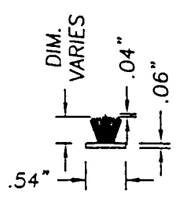

(14) SLIDING PANEL
WEATHERSTRIP
SCHLEGEL FS70270

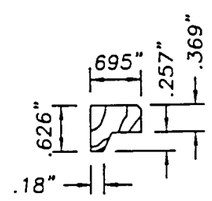

GLAZING STOP
CLEAR PINE (7)

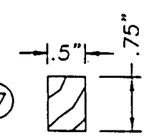

(47) FIXED PANEL TOP SPACER
CLEAR PINE

Approved as complying with the
Florida Building Code
Date August 1, 2002
NOA# 02-0605.01
Miami Dade Product Control
Division
By Theodore Berman

EAGLE WINDOW & DOOR, INC.
375 EAST 9th St.
DUBUQUE,, IA 52004-1072
PH. 319.556.4408

PRODUCT: ALUM. CLAD SLIDING FRENCH DOOR W/ & W/OUT SIDELITE UP TO 12-0 x 8-0 UNIT

PART OR ASSEMBLY: UNIT COMPONENTS & NOTES

NO.	DATE	REVISIONS	BY

RW BUILDING CONSULTANTS, INC.
813.684.3831

DATE: 5/23/02
SCALE: N.T.S.
DWG. BY: WLN
CHK. BY: RW
DRAWING NO.: S-2144
SHEET 5 OF 6

Item	DESCRIPTION	Material
1	MAIN FRAME HEADER (VENEER OVER F.J. PINE)	F.J. PINE
2	MAIN FRAME SIDE JAMB (VENEER OVER F.J. PINE)	F.J. PINE
3	MAIN FRAME CLADDING (EXTRUDED ALUM. .055" WALL)	6063-T6
4	DOOR/SIDELITE TOP & BOTTOM RAIL (VENEER OVER F.J. PINE)	F.J. PINE
5	DOOR/SIDELITE SIDE STILE (VENEER OVER F.J. PINE)	F.J. PINE
6	DOOR/SIDELITE STILE & RAIL CLADDING (EXTRUD. ALUM. .067" THK.)	6063-T6
7	GLAZING STOP (CLEAR PINE)	WOOD
8	9/16" (.56944" ACTUAL THK.) LAMINATED ANNEALED GLASS (SEA-STORM BY CARDINAL)	GLASS
9	GLAZING COMPOUND, SILICONE DOW 995	SILICONE
10	FOAM TAPE .50" W. x .125" THK.	FOAM
11	1/8" DIA. GLAZING MASTIC	BUTYL RUBBER
12	18GA. TRIM NAIL x 1 1/4" LONG	STEEL
13	ROLLER ASSEMBLY	–
14	SLIDING PANEL WEATHERSTRIP (PILE SCHLEGEL FS70270)	PILE
15	PARTING STOP WEATHERSTRIP/SEALING FIN	PVC
16	WEATHERSTRIP/SEALING FIN INTERIOR STOP (SCHLEGEL #PF103)	PVC
17	FIXED PANEL INTERLOCK (EXTRUDED PVC)	PVC
18	ROLLER CARRIER (EXTRUDED PVC)	PVC
19	ACTIVE PANEL INTERLOCK (EXTRUDED PVC)	PVC
20	#8 x 2" PHIL. FLATHEAD SCREW	STEEL
21	3/16" TAPCON ANCHOR (ELCO)	STEEL
22	#7 x 1 1/4" PHILLIPS FLATHEAD WOOD SCREW	STEEL
23	#10 x 2 1/2" PHILLIPS FLATHEAD WOOD SCREW	STEEL
24	SLIDING DOOR PANEL TOP SLIDE, RIGID PVC	PVC
25	HEAD INTERIOR STOP (CLEAR PINE)	WOOD
26	SILL EXTENSION INTERIOR SIDE (CLEAR OAK)	OAK
27	SIDE JAMB INTERIOR STOP (CLEAR PINE)	VINYL
28	HEAD PARTING STOP (FINGER JOINTED PINE)	PINE
29	SIDE PARTING STOP (FINGER JOINTED PINE)	PINE
30	NOT USED	–
31	2x WOOD INNER TEST BUCK	WOOD
32	1/4" MAX. SHIM MATERIAL	–
33	SLIDING FRENCH DOOR SILL (EXTRUDED FIBERGLASS)	FIBERGLASS
34	FIXED PANEL/SIDELITE SILL EXTENSION (EXTRUDED FIBERGLASS)	FIBERGLASS
35	2" x 6" MULLION SPACER	LVL
36	EXTERIOR MULLION COVER (EXTRUDED ALUM.)	6063-T6
37	INTERIOR MULLION TRIM (CLEAR PINE)	WOOD
38	SLIDING FRENCH DOOR HANDLE	–
39	1/4" DIA. BACKING ROD	FOAM
40	BULB WEATHERSTRIP (HANDEL SIDE JAMB SCHLEGEL #AP325)	VINYL
41	FIXED PANEL STILE CAP (EXTRUDED ALUM.)	6063-T6
42	#6 x 1" PHILLIPS FLATHEAD WOOD SCREW	STEEL
43	COMPRESSION WEATHERSTRIP (SCHLEGEL #Q375T270)	FOAM
44	SIDELITE PANEL INTERIOR STOP (CLEAR PINE)	WOOD
45	SLIDING PANEL SILL EXTENDER	STEEL
46	#10 x 1" PHILLIPS PANHEAD SCREW	STEEL
47	FIXED PANEL TOP SPACER (CLEAR PINE)	WOOD
48	SLIDING PANEL STABILIZER (.080" STEEL)	STEEL
49	FIXED/SIDELITE PANEL STABILIZER BOTTOM .080" STEEL	STEEL
50	CONSTRUCTION ADHESIVE PL-200	GLUE
51	1/4" CROWN x 1 1/4" L. WIRE STAPLE	STEEL
52	1" x 3/4" CORRUGATED FASTENER	STEEL
53	FIXED PANEL STABILIZER TOP, .080" STEEL	STEEL
54	FIXED PANEL REINFORCEMENT BAR, 1.688" x .375" ALUM. BAR	STEEL

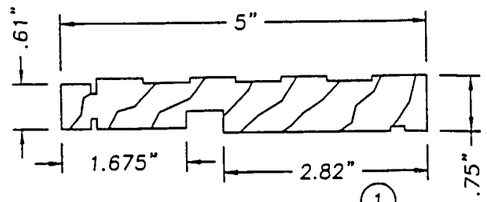

(1) (2) MAIN FRAME HEADER & SIDE JAMB, VENEER OVER FINGER JOINTED PINE

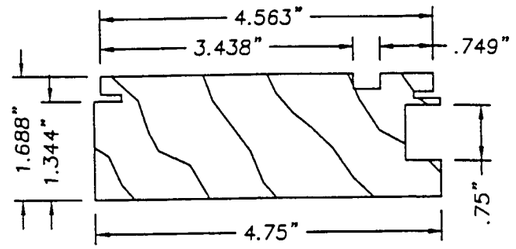

(4) DOOR & SIDELITE TOP & BOTTOM RAIL, VENEER OVER FINGER JOINTED PINE

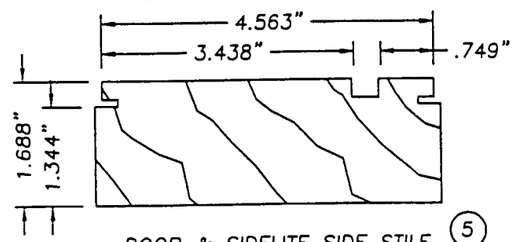

(5) DOOR & SIDELITE SIDE STILE VENEER OVER FIGER JOINTED PINE

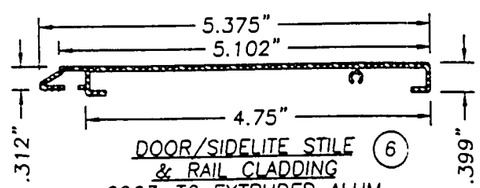

(6) DOOR/SIDELITE STILE & RAIL CLADDING 6063-T6 EXTRUDED ALUM. .067" WALL

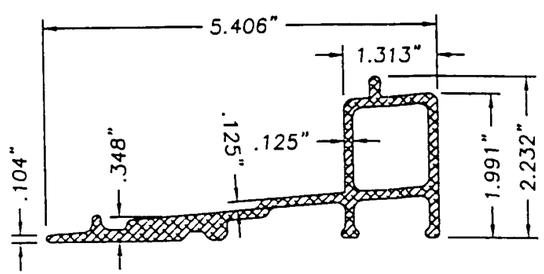

(33) SLIDING FRENCH DOOR SILL EXTRUDED FIBERGLASS

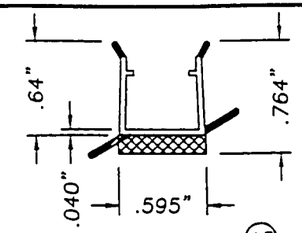

(15) PARTING STOP WEATHERSTRIP/SEALING FIN

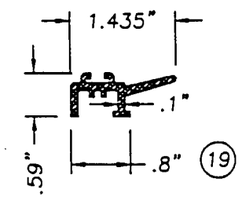

(19) ACTIVE PANEL INTERLOCK EXTRUDED PVC .10" WALL

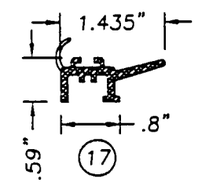

(17) FIXED PANEL INTERLOCK EXTRUDED PVC .10" WALL

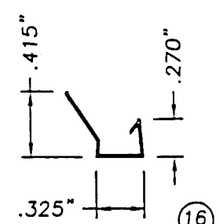

(16) WEATHERSTRIP/SEALING FIN INTERIOR STOP SCHLEGEL #PF103

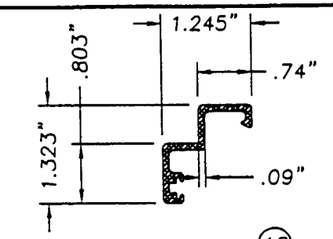

(18) ROLLER CARRIER EXTRUDED PVC .090" WALL

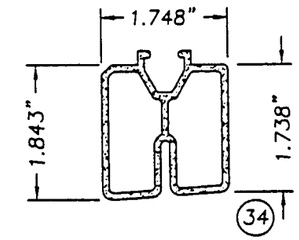

(34) FIXED PANEL/SIDELITE SILL EXTENSION, EXTRUDED FIBERGLASS

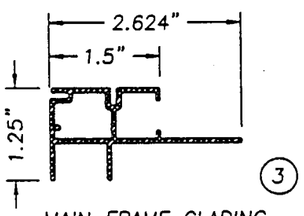

(3) MAIN FRAME CLADING 6063-T6 EXTRUDED ALUM. .055" WALL

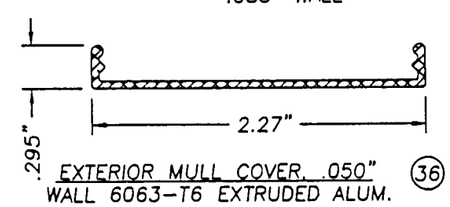

(36) EXTERIOR MULL COVER, .050" WALL 6063-T6 EXTRUDED ALUM.

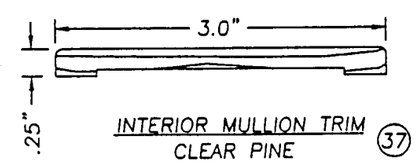

(37) INTERIOR MULLION TRIM CLEAR PINE

Approved as complying with the Florida Building Code
Date August 1, 2002
NOA# 02-0605.01
Miami Dade Product Control Division
By Theodore Kanwar

EAGLE WINDOW & DOOR, INC.
375 EAST 9th St.
DUBUQUE,, IA 52004-1072
PH. 319.556.4408

PRODUCT: ALUM. CLAD SLIDING FRENCH DOOR W/ & W/OUT SIDELITE UP TO 12-0 x 8-0 UNIT

PART OR ASSEMBLY: UNIT COMPONENTS & BILL OF MATERIAL

NO.	DATE	REVISIONS	BY

RW BUILDING CONSULTANTS, INC.
813.684.3831

DATE:	5/23/02
SCALE:	N.T.S.
DWG. BY:	WLN
CHK. BY:	RW
DRAWING NO.:	S-2144
SHEET	6 OF 6