MIAMI-DADE
BUILDING CODE COMPLIANCE OFFICE (BCCO)
PRODUCT CONTROL DIVISION

MIAMI-DADE COUNTY, FLORIDA
METRO-DADE FLAGLER BUILDING
140 WEST FLAGLER STREET, SUITE 1603
MIAMI, FLORIDA 33130-1563
(305) 375-2901 FAX (305) 375-2908

NOTICE OF ACCEPTANCE (NOA)

M.C.A Clay Roof Tile, Inc.
1985 Sampson Avenue
Corona,Ca 92789

SCOPE:

This NOA is being issued under the applicable rules and regulations governing the use of construction materials. The documentation submitted has been reviewed by Miami-Dade County Product Control Division and accepted by the Board of Rules and Appeals (BORA) to be used in Miami Dade County and other areas where allowed by the Authority Having Jurisdiction (AHJ).

This NOA shall not be valid after the expiration date stated below. The Miami-Dade County Product Control Division (In Miami Dade County) and/or the AHJ (in areas other than Miami Dade County) reserve the right to have this product or material tested for quality assurance purposes. If this product or material fails to perform in the accepted manner, the manufacturer will incur the expense of such testing and the AHJ may immediately revoke, modify, or suspend the use of such product or material within their jurisdiction. BORA reserves the right to revoke this acceptance, if it is determined by Miami-Dade County Product Control Division that this product or material fails to meet the requirements of the applicable building code.

This product is approved as described herein, and has been designed to comply with the High Velocity Hurricane Zone of the Florida Building Code.

DESCRIPTION: One Piece "S" Mission Tile

LABELING: Each unit shall bear a permanent label with the manufacturer's name or logo, city, state and following statement: "Miami-Dade County Product Control Approved", unless otherwise noted herein.

RENEWAL of this NOA shall be considered after a renewal application has been filed and there has been no change in the applicable building code negatively affecting the performance of this product.

TERMINATION of this NOA will occur after the expiration date or if there has been a revision or change in the materials, use, and/or manufacture of the product or process. Misuse of this NOA as an endorsement of any product, for sales, advertising or any other purposes shall automatically terminate this NOA. Failure to comply with any section of this NOA shall be cause for termination and removal of NOA.

ADVERTISEMENT: The NOA number preceded by the words Miami-Dade County, Florida, and followed by the expiration date may be displayed in advertising literature. If any portion of the NOA is displayed, then it shall be done in its entirety.

INSPECTION: A copy of this entire NOA shall be provided to the user by the manufacturer or its distributors and shall be available for inspection at the job site at the request of the Building Official.

This consists of pages 1 through 8.
The submitted documentation was reviewed by Frank Zuloaga, RRC

ROOFING ASSEMBLY APPROVAL

Category: Roofing
Sub-Category: High Profile Tile
Material: Clay

1.SCOPE

This is a new a roofing system using **One Piece "S" Mission Tile**, as manufactured by M.C.A. Clay Roof Tile, Inc. described in Section 2 of this Notice of Acceptance. For locations where the pressure requirements, as determined by applicable Building code does not exceed the values listed in Section 4 herein. The attachment calculations shall be done as an uplift based system.

2. PRODUCT DESCRIPTION

Manufactured by Applicant	Dimensions	Test Specifications	Product Description
One Piece "S" Mission Tile	Length: 19" Width: 14½" Thickness: ½" Head-lap min. 3" Exposure max. 16"	TAS 112	High profile clay roof tile for direct deck or battened nail-on, mortar or adhesive set applications.
Trim Pieces	Length: varies Width: varies	TAS 112	Accessory trim, clay roof pieces for use at hips, rakes, ridges and valley terminations.

2.1 COMPONENTS OR PRODUCTS MANUFACTURED BY OTHERS

Product	Dimensions	Test Specifications	Product Description	Manufacturer
Tile Nails	0.123 diameter wire bent to a predetermined shape, see detail drawing "B & D"	TAS 114 Appendix E	Stainless Steel	Generic (With current NOA)
Straw Nail	5" long ring shank 0.148" diameter 0.433" head diameter, see detail drawing "B & C"	TAS 114 Appendix E	Stainless Steel	Generic (With current NOA)
Wind Clip	0.122" diameter wire bent to for a tile clip, see detail drawing "C"	TAS 114 Appendix E	Stainless Steel	Generic (With current NOA)

Product	Dimensions	Test Specifications	Product Description	Manufacturer
Hurricane Clip & Fasteners	Clips min. ½" width min. 0.062" thick Clip Fasteners min. 8d x 1¼" See detail drawing "B & C"	TAS 114 Appendix E	Corrosion resistant bronze, aluminum, stainless steel, galvanized steel or plastic attachment clips for supplemental tile attachment. Clips are installed with corrosion resistant roofing nails compatible with the clip. A hurricane clip is required on all nail-on eave tiles.	Generic (With curent NOA)

3. LIMITATIONS

3.1 Fire classification is not part of this acceptance.

3.2 For mortar or adhesive set tile applications, a static field uplift test in accordance with RAS 106 may be required, refer to applicable building code.

3.3 Applicant shall retain the services of a Miami-Dade County Certified Laboratory to perform quarterly tests in accordance with TAS 112, appendix 'A'. Such testing shall be submitted to the Building Code Compliance Office for review.

3.4 Minimum underlayment shall be in compliance with the applicable Roofing Applications Standards listed section 4.1 herein.

3.5 30/90 hot mopped underlayment applications may be installed perpendicular to the roof slope unless stated otherwise by the underlayment material manufacturers published literature.

3.6 This acceptance is for wood deck applications. Minimum deck requirements shall be in compliance with applicable Building Code.

4. INSTALLATION

4.1 "One Piece "S" Mission Roofing Tile" and its components shall be installed in strict compliance with Roofing Application Standard TAS 120.

4.2 Data For Attachment Calculations

Table 1: Aerodynamic Multipliers - λ (ft^3)		
Tile Profile	**λ (ft^3) Batten Application**	**λ (ft^3) Direct Deck Application**
One Piece "S" Mission Tile	0.33	0.34

Table 2: Restoring Moments due to Gravity - M_g (ft-lbf)										
Tile Profile	**3":12"**		**4":12"**		**5":12"**		**6":12"**		**Greater than 7":12"**	
One Piece "S" Mission Tile	Batten	Direct Deck	Batten	Direct Deck	Batten	Direct Deck	Batten	Direct Deck	Batten	Direct Deck
	6.66	7.03	6.54	6.90	6.35	6.70	6.20	6.54	6.00	N/A

Table 3: Attachment Resistance Expressed as a Moment - M_f (ft-lbf) for Nail-On Systems									
Tile Profile	Tile Application	Approved Nails		Approved Screws		Approved Field Clip With:		Approved Eave Clip With:	
		1 nail	2 nails	1 screw	2 screws	1 nail	2 nails	1 nail	2 nails
One Piece "S" Mission Tile	Battens	2.80	7.30	N/A	10.70	19.00	36.60	24.00	41.80
	Direct Deck	6.80	9.20	N/A	11.30	23.10	27.60	29.30	38.10

1 Data noted in Table 3 is for installation with a 3" tile headlap.

2 Approved screws are as noted in the 'Trade Names of Products Manufactured By Others. Clips on eave tile are not required for this attachment configuration unless the Required Moment of Resistance exceeds the values noted above.

Table 4: Attachment Resistance Expressed as a Moment - M_f (ft-lbf) for Nail-On Systems			
Tile Profile	Tile Application	Tile Nail and Screw	Straw Nail Wind Clip and Ring Shank Nail[2]
One Piece "S" Mission Tile	Direct Deck New Constrction/Reroof (min 15/32" plywood)	52.00	56.90

1 Data noted in Table 4 is for installation with a 3" tile headlap.

2 Approved screws, Tile Nail, and Straw Nail are as noted in the 'Trade Names of Products Manufactured By Others' and 'Profile Drawings' sections of this Approval. Clips on eave tile are not required for this attachment configuration unless the Required Moment of Resistance exceeds the values noted above.

Table 5: Attachment Resistance Expressed as a Moment - M_f (ft-lbf) for Mortar or Adhesive Set Systems		
Tile Profile	Tile Application	Attachment Resistance
One Piece "S" Mission Tile	Mortar Set	24.50
	Adhesive Set	66.50

5. LABELING

All tiles shall bear the imprint or identifiable marking of the manufacturer's name or logo, or following statement: "Miami-Dade County Product Control Approved".

6. BUILDING PERMIT REQUIREMENTS

6.1 Application for building permit shall be accompanied by copies of the following:

6.1.1 This Notice of Acceptance.

6.1.2 Any other documents required by the Building Official or applicable Building Code in order to properly evaluate the installation of this system.

PROFILE DRAWING
"A"

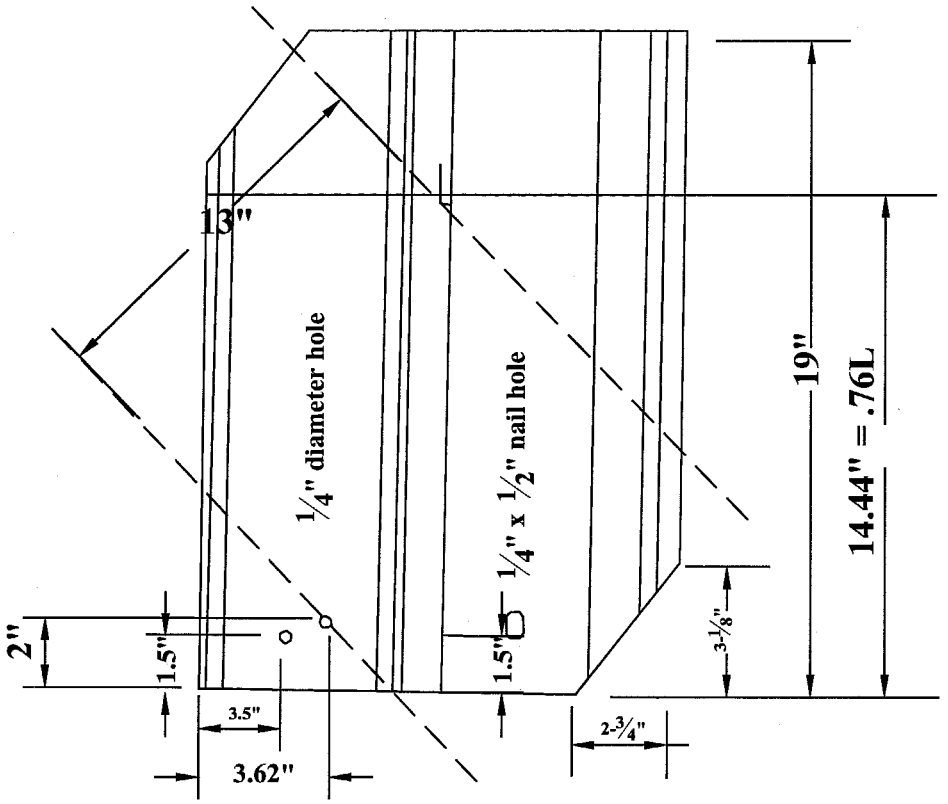

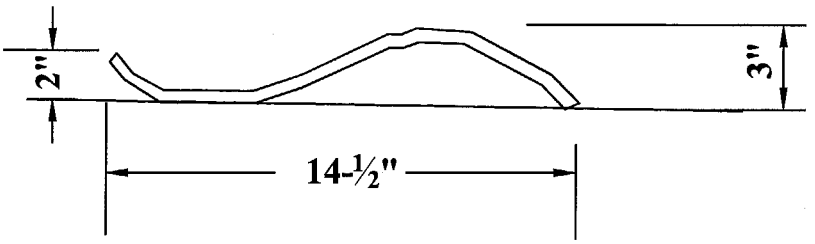

M.C.A. ONE PIECE "S" MISSION TILE

PROFILE DRAWING
"B"

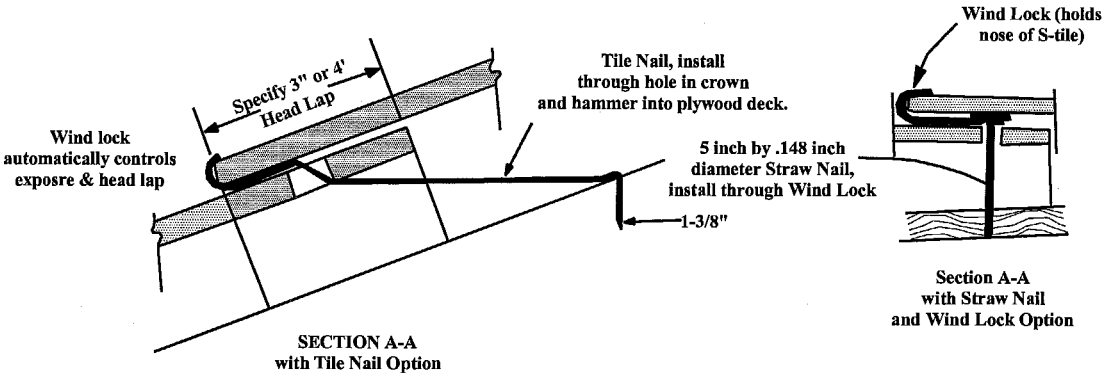

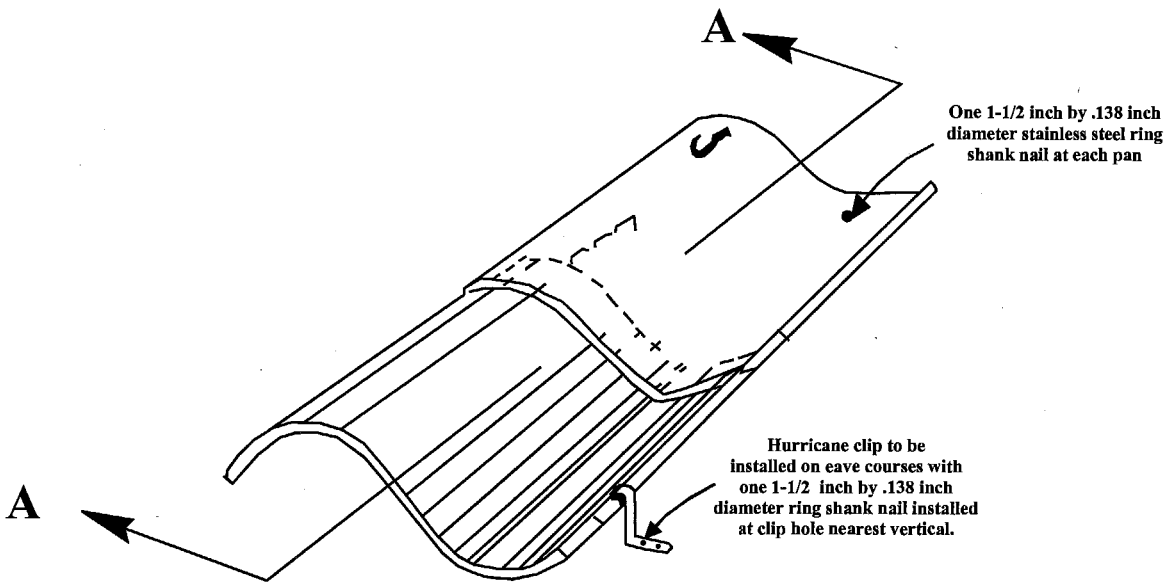

APPROVED SCREW FOR SCREW DATA IN TABLE 4

PROFILE DRAWING
"C"

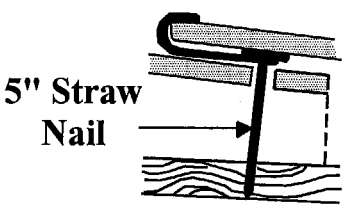

NAILS

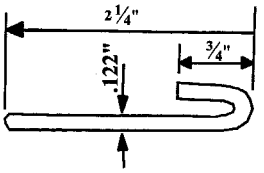

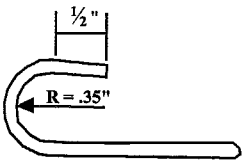

WIND CLIP

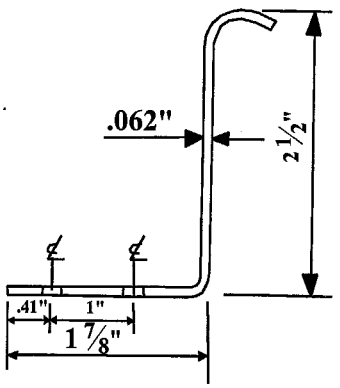

Side View

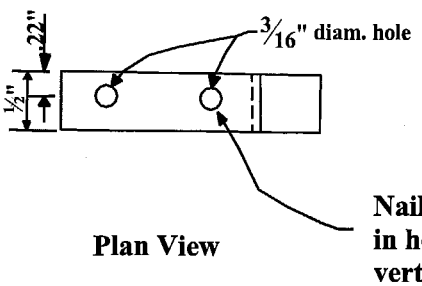

Plan View

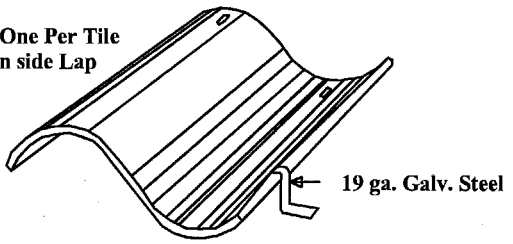

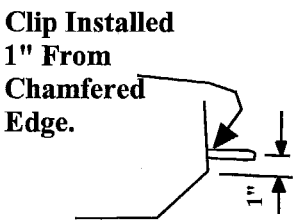

HURRICANE CLIP

APPROVED SCREW FOR SCREW DATA IN TABLE 3 & 4

PROFILE DRAWING
"D"

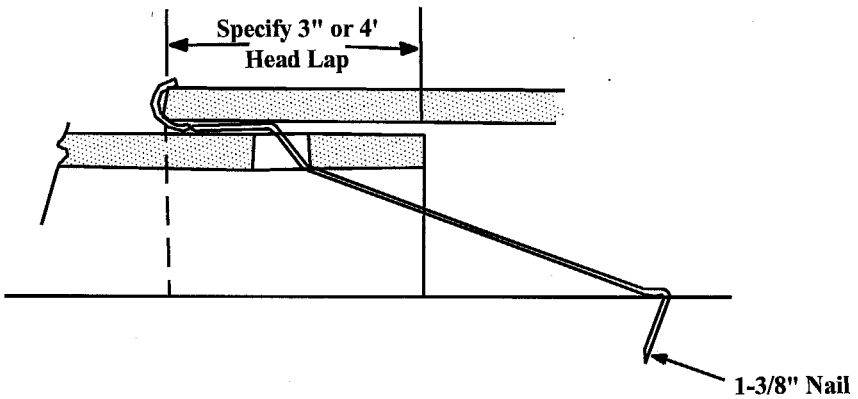

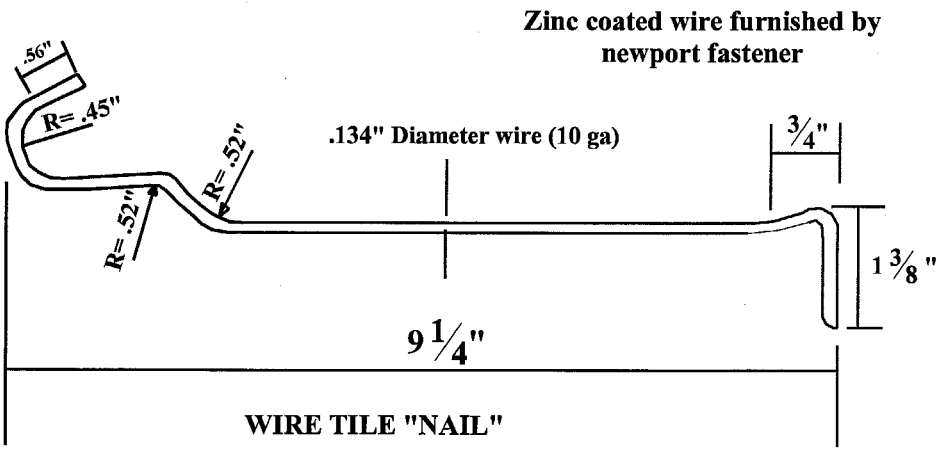

APPROVED TILE NAIL DATA IN TABLE 4

END OF THIS ACCEPTANCE

NOTICE OF ACCEPTANCE: EVIDENCE SUBMITTED

A. TESTS:

Test Agency	Test Identifier	Test Name/Report	Date
Ramtech Laboratories, Inc.	IC-1369-95/10476-95	ASTM C 1167	Nov. 1995
Ramtech Laboratories, Inc.	10477-95/1366	Static Uplift Testing TAS 102 A Tile Nail and Screw	Nov. 1995
Ramtech Laboratories, Inc.	10475-95/1367	Static Uplift Testing TAS 102 5" straw nial, wind clip and ring shank nail.	Nov. 1995
Ramtech Laboratories, Inc.	10478-95/1368	Static Uplift Testing TAS 102 2-#8 screws	Nov. 1995
Redland Technologies	7161-03 Appendix III	Static Uplift Testing TAS 102	Dec. 1991
Redland Technologies	7161-03 Appendix II	Wind Tunnel Testing TAS 108(Nail-On)	Dec. 1991
Redland Technologies	Letter Dated Aug. 1, 1994	Wind Tunnel Testing TAS 108(Nail-On)	Aug. 1994
Redland Technologies	P0631-01	Wind Tunnel Testing TAS 108(Mortar Set)	July 1994
Redland Technologies	P0402	Withdrawal Resistance Testing of screw vs. smooth shank nails	Sept. 1993
Redland Technologies	7161-03 Appendix III	Static Uplift Testing TAS 102(A)	Dec. 1991
The Center for Applied Engineering, Inc.	94-060B	Static Uplift Testing TAS 101 (Adhesive Set)	March, 1994
The Center for Applied Engineering, Inc.	94-084	Static Uplift Testing TAS 101 (Mortar Set)	May 1994
The Center for Applied Engineering, Inc.	Project No. 307025 Test #MDC-76	Wind Driven Rain TAS 100	Oct. 1994

B. OTHER

1. NTRMA Association Member
2. Notice of Acceptance number 99-0212.07