MIAMI-DADE

BUILDING CODE COMPLIANCE OFFICE (BCCO)
PRODUCT CONTROL DIVISION

**MIAMI-DADE** COUNTY, FLORIDA
METRO-DADE FLAGLER BUILDING
**140 WEST FLAGLER STREET, SUITE 1603**
MIAMI, FLORIDA 33130-1563
(305) 375-2901 FAX (305) 375-2908

# NOTICE OF ACCEPTANCE (NOA)

**Slas, Inc.**
**1121 S. W. 122 Avenue (#307)**
**Miami, Florida 33184**

**SCOPE:**
This NOA is being issued under the applicable rules and regulations governing the use of construction materials. The documentation submitted has been reviewed by Miami-Dade County Product Control Division and accepted by the Board of Rules and Appeals (BORA) to be used in Miami Dade County and other areas where allowed by the Authority Having Jurisdiction (AHJ).

This NOA shall not be valid after the expiration date stated below. The Miami-Dade County Product Control Division (In Miami Dade County) and/or the AHJ (in areas other than Miami Dade County) reserve the right to have this product or material tested for quality assurance purposes. If this product or material fails to perform in the accepted manner, the manufacturer will incur the expense of such testing and the AHJ may immediately revoke, modify, or suspend the use of such product or material within their jurisdiction. BORA reserves the right to revoke this acceptance, if it is determined by Miami-Dade County Product Control Division that this product or material fails to meet the requirements of the applicable building code.

This product is approved as described herein, and has been designed to comply with the High Velocity Hurricane Zone of the Florida Building Code.

**DESCRIPTION: "HT-100" / Aluminum Accordion Shutter**

**APPROVAL DOCUMENT:** Drawing No. 00-849, titled " HT100 Accordion Shutter ", sheets 1 through 6 of 6, prepared by Knezevich & Associates, Inc., dated July 23, 1996, last revision #8 dated May 10, 2002, bearing the Miami-Dade County Product Control Approval stamp with the Notice of Acceptance number and approval date by the Miami-Dade County Product Control Division.

**MISSILE IMPACT RATING: Large and Small Missile Impact**

**LABELING:** Each unit shall bear a permanent label with the manufacturer's name or logo, city, state and the following statement: "Miami-Dade County Product Control Approved", unless otherwise noted herein.

**RENEWAL** of this NOA shall be considered after a renewal application has been filed and there has been no change in the applicable building code negatively affecting the performance of this product.

**TERMINATION** of this NOA will occur after the expiration date or if there has been a revision or change in the materials, use, and/or manufacture of the product or process. Misuse of this NOA as an endorsement of any product, for sales, advertising or any other purposes shall automatically terminate this NOA. Failure to comply with any section of this NOA shall be cause for termination and removal of NOA.

**ADVERTISEMENT:** The NOA number preceded by the words Miami-Dade County, Florida, and followed by the expiration date may be displayed in advertising literature. If any portion of the NOA is displayed, then it shall be done in its entirety.

**INSPECTION:** A copy of this entire NOA shall be provided to the user by the manufacturer or its distributors and shall be available for inspection at the job site at the request of the Building Official.

This NOA **revises & renews NOA #00-0628.16** and consists of this page 1 & approval document mentioned above
The submitted documentation was reviewed by **Helmy A. Makar, P.E.**

PRODUCT CONTROL ACCEPTED

**NOA No 02-0611.06**
**Expiration Date: 06/17/2007**
**Approval Date: 06/17/2002**

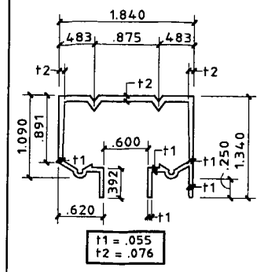


1 HEADER-CLG. MOUNTED
SCALE: HALF SIZE

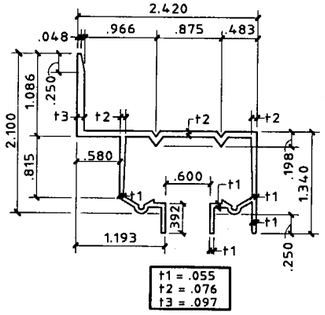


2 HEADER-WALL MOUNTED
SCALE: HALF SIZE

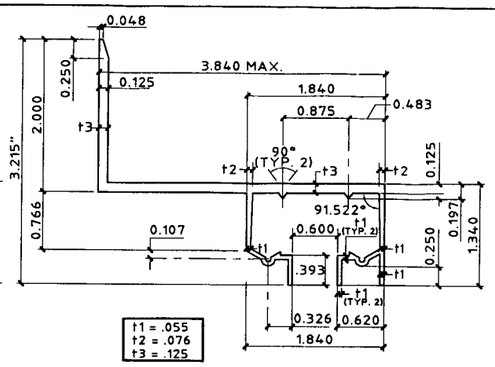


2a BUILD-OUT WALL HEADER
SCALE: HALF SIZE

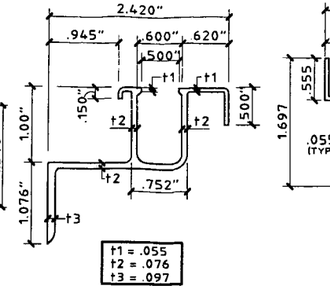


3 SILL-WALL MOUNTED
SCALE: HALF SIZE

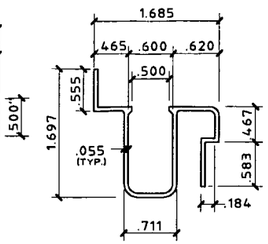


4 ADJ. SILL-TOP
SCALE: HALF SIZE

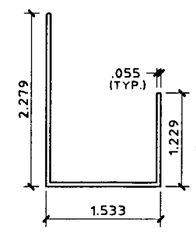


5 ADJ. SILL-BOT.
SCALE: HALF SIZE

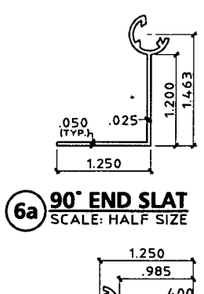


6a 90° END SLAT
SCALE: HALF SIZE

7 FLAT END SLAT
SCALE: HALF SIZE

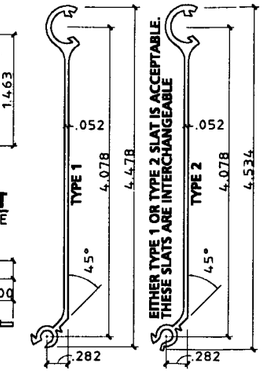


8 TYP. SLATS
SCALE: HALF SIZE

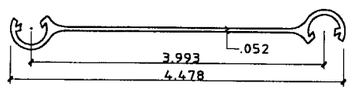


8a ADAPTER SLAT
SCALE: HALF SIZE

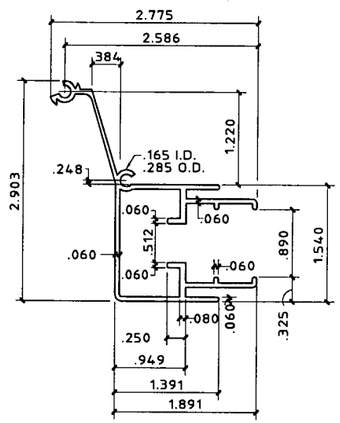


9 CENTER MATE 1
SCALE: HALF SIZE

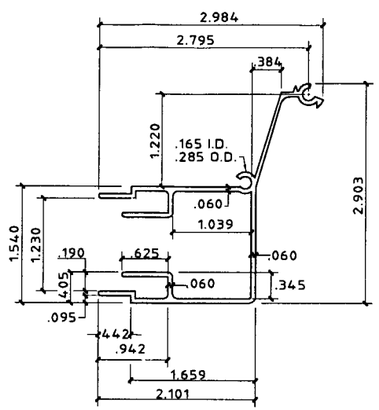


10 CENTER MATE 2
SCALE: HALF SIZE

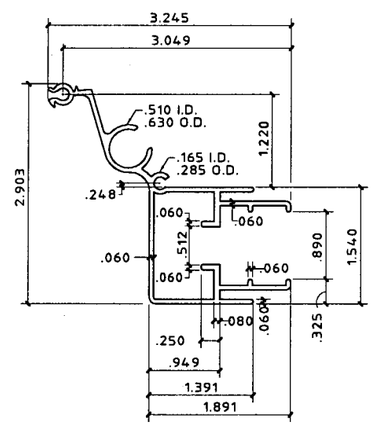


9a CENTER MATE 1 (W/ LOCKING ROD)
SCALE: HALF SIZE

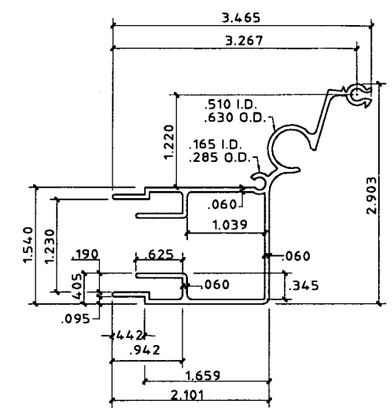


10a CENTER MATE 2 (W/ LOCKING ROD)
SCALE: HALF SIZE

**GENERAL NOTES:**

1. THESE APPROVAL DOCUMENTS REPRESENT A SHUTTER SYSTEM ANALYZED WITH THE PROVISION SET FOR THE ISSUANCE OF A NOTICE OF ACCEPTANCE (NOA) BY MIAMI-DADE COUNTY PRODUCT CONTROL DIVISION FOR THE HIGH VELOCITY HURRICANE ZONE (HVHZ) OF THE FLORIDA BUILDING CODE.
2. TO VERIFY THAT THE ANCHORS AS TESTED, ARE NOT OVERSTRESSED IN THESE APPROVAL DOCUMENTS, A 33% INCREASE IN ALLOWABLE STRESS WAS USED IN THE FASTENER ANALYSIS.
3. DETERMINE THE POSITIVE AND NEGATIVE DESIGN LOADS TO USE WHEN REFERENCING THESE DOCUMENTS IN ACCORDANCE WITH THE GOVERNING CODE AND GOVERNING WIND VELOCITY. FOR WIND LOAD CALCULATIONS IN ACCORDANCE WITH ASCE 7-98, A DIRECTIONALITY FACTOR OF Kd =1.0 SHALL BE USED.
4. THESE APPROVAL DOCUMENTS ARE GENERIC AND DO NOT INCLUDE INFORMATION FOR SITE-SPECIFIC APPLICATION OF THIS SHUTTER SYSTEM.
5. THESE APPROVAL DOCUMENTS COMPLY WITH CHAPTER 61G15-23 OF THE FLORIDA ADMINISTRATIVE CODE.
6. THESE APPROVAL DOCUMENTS ARE SUITABLE TO BE APPLIED BY THE CONTRACTOR PROVIDED THE CONTRACTOR DOES NOT DEVIATE FROM THE CONDITIONS DETAILED HEREIN AND THE CONTRACTOR VERIFIES THAT THE EXISTING STRUCTURE DOES NOT DEVIATE IN EITHER FORM OR MATERIAL FROM THE STRUCTURAL SUBSTRATES DETAILED HEREIN.
7. ANY MODIFICATIONS OR ADDITIONS TO THESE APPROVAL DOCUMENTS WILL VOID THE APPROVAL DOCUMENTS.
8. WHEN THE SITE CONDITIONS DEVIATE FROM THESE APPROVAL DOCUMENTS, THE BUILDING OFFICIAL MAY ELECT ONE OF THE FOLLOWING OPTIONS:
   A) REQUIRE THAT SITE SPECIFIC DOCUMENTS BE PREPARED, SIGNED, DATED AND SEALED BY A LICENSED ENGINEER OR REGISTERED ARCHITECT, WHICH DETAIL AND JUSTIFY THE DEVIATION. SAID DOCUMENTS SHALL BE SUBMITTED TO THE PRODUCT ENGINEER FOR REVIEW AS A CONDITION TO THE BUILDING OFFICIAL GRANTING HIS/HER APPROVAL.
   B) REQUIRE THAT A ONE-TIME SITE SPECIFIC APPROVAL BE APPLIED FOR AND SECURED FROM THE MIAMI-DADE COUNTY PRODUCT CONTROL DIVISION.

   WHEN THE SITE CONDITION DEVIATIONS OCCUR WITHIN THE HIGH VELOCITY HURRICANE ZONE AREAS, ONLY OPTION "B" SHALL BE ACCEPTED BY THE BUILDING OFFICIAL.
9. EACH SHUTTER ASSEMBLY SHALL BE PERMANENTLY LABELED AS FOLLOWS:

   **SLAS, INC.**
   **MIAMI, FLORIDA**
   **MIAMI-DADE COUNTY PRODUCT APPROVED**
10. ALL SHUTTERS SHALL HAVE A LOCKING MECHANISM AT CENTER OR SIDE CLOSURE WITHIN 18" OF CENTER (VERT.). LOCKING MECHANISM SHALL BE LOCKED TO PROVIDE HURRICANE PROTECTION.
11. STORM SHUTTER EXTRUSIONS SHOWN SHALL BE 6063-T6 ALUMINUM ALLOY, U.O.N.
12. ALL SCREWS AND BOLTS TO BE 2024-T4 ALUMINUM ALLOY, STAINLESS STEEL, OR GALVANIZED STEEL WITH A MINIMUM TENSILE STRENGTH OF 33 K.S.I., U.O.N. POP RIVETS TO BE 3/16"Ø, 5052 ALUM. ALLOY, U.O.N.
13. TOP AND BOTTOM DETAILS MAY BE INTERCHANGED AS FIELD CONDITIONS REQUIRE.
14. FLOOR TRACKS MAY BE REMOVABLE AT NON-STACKING LOCATIONS. USE REMOVABLE ANCHORS SUCH AS POWERS CALK-IN ANCHORS.

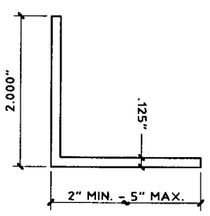


11 ANGLE
SCALE: HALF SIZE

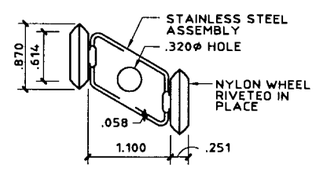


TYP. AT EVERY OTHER INSIDE JOINT AT TOP.

12 ROLLER ASSEMBLY
SCALE: HALF SIZE

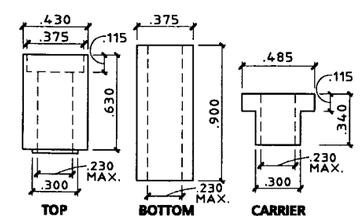


12a BUSHINGS
SCALE: FULL SIZE

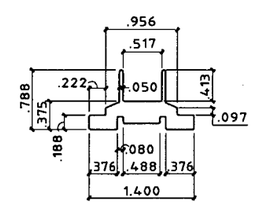


13 INSERT
SCALE: HALF SIZE

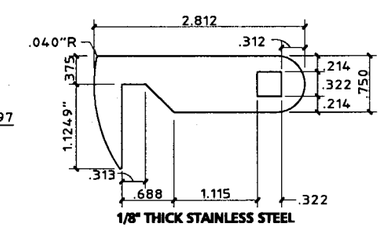


14 LOCKING ARM
SCALE: HALF SIZE

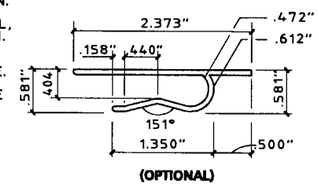


15 LOCKING CLIP
SCALE: HALF SIZE

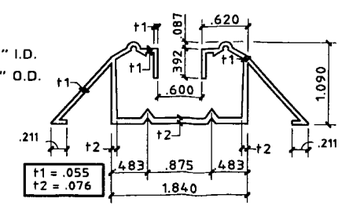


16 WALKOVER SILL FLOOR MOUNTED
SCALE: HALF SIZE

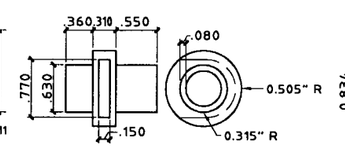


17 LOCKING ARM ALIGNMENT BUSHING (NYLON)
SCALE: HALF SIZE

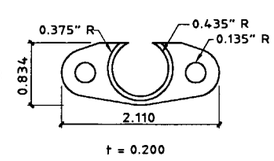


18 INSIDE HANDLE SHIM (NYLON)
SCALE: HALF SIZE

Approved as complying with the Florida Building Code
Date 06/17/2002
NOA# 02-0611.06
Miami Dade Product Control Division
By Helmy A. Hafez

KNEZEVICH & ASSOCIATES, INC.
CONSULTING ENGINEERS • PRODUCT TESTING
1260 N. UNIVERSITY DRIVE, SUITE 180 • FORT LAUDERDALE, FL 33322
TEL: (954) 382-2800 • FAX: (954) 382-2989 • FLORIDA COA #3205
WEBSITE: WWW.KNEZEVICH.COM • E-MAIL: KA@KNEZEVICH.COM
COPYRIGHT © 2002 KNEZEVICH & ASSOCIATES, INC.
HT100 LICENSED BY HI-TECH SHUTTER GROUP, INC.

HT100
ACCORDION SHUTTER
SLAS, INC.
13894 S.W. 139th COURT
MIAMI, FLORIDA 33186
tel(305) 225-1393 * fax(305) 225-1322

V.J. KNEZEVICH
PROFESSIONAL ENGINEER
Fl. License No: PE0010983

JUN 07 2002

revisions

| no | date | by | description |
|---|---|---|---|
| 2 | 10/10/96 | | COUNTY COMMENTS |
| 3 | 11/26/97 | JWK | REVISE FASTENERS |
| 4 | 01/16/98 | JWK | FASTENER NOTES |
| 5 | 04/30/98 | JWK | SLAT 2/REV.2,4 DESC. |
| 6 | 06/16/99 | VJK | CENTER MATES/FASTENERS |
| 7 | 04/02/02 | VJK | FBC2001 GENERAL NOTES |
| 8 | 05/10/02 | MAS | GENERAL NOTES |

HTSG I.D. # 0510029616BD

date 07/23/1996
scale AS NOTED
drawn by MCR
design by VJK
checked by VJK
drawing no. 00-849
sheet 1 of 6

Print Information: \\hurricane\ka\CADD\Associations\Hi-Tech\Slas\00-849\R8-sub\00-849-01.dwg MCantu 06/07/2002 11:16:13am

06/07/02 11:05

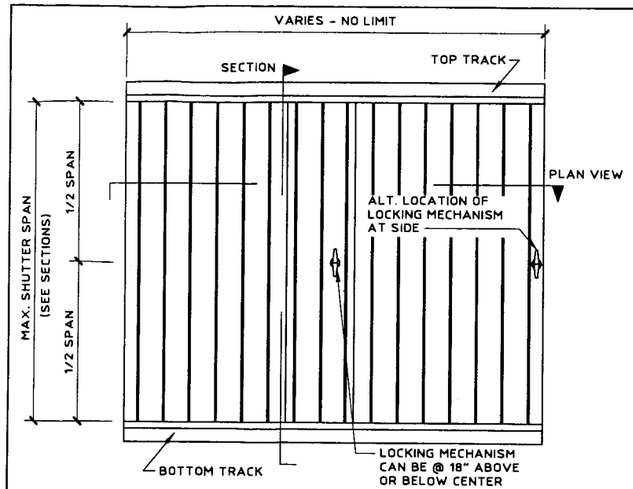


## TYPICAL ELEVATION
N.T.S.

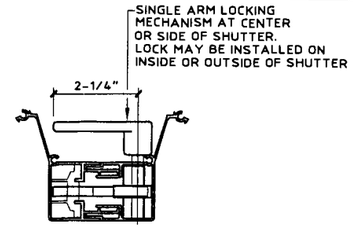


## SINGLE ARM LOCK
N.T.S.

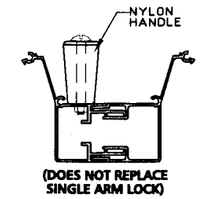


## OPTIONAL CLOSER HANDLE
N.T.S.

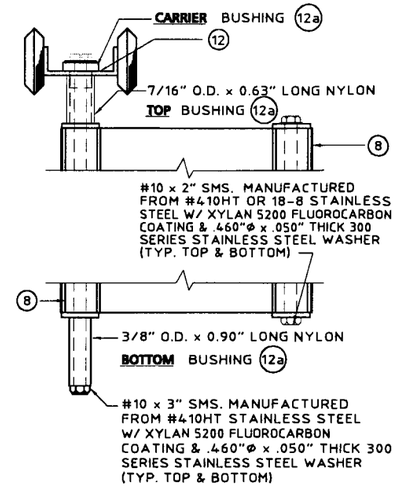


## SCREW BUSHING & ROLLER/ BUSHING ASSEMBLY
SCALE: HALF SIZE

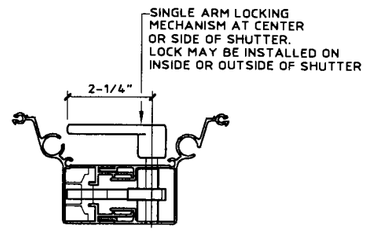


## SINGLE ARM LOCK
N.T.S.

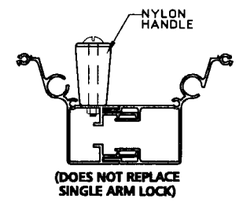


## OPTIONAL CLOSER HANDLE
N.T.S.

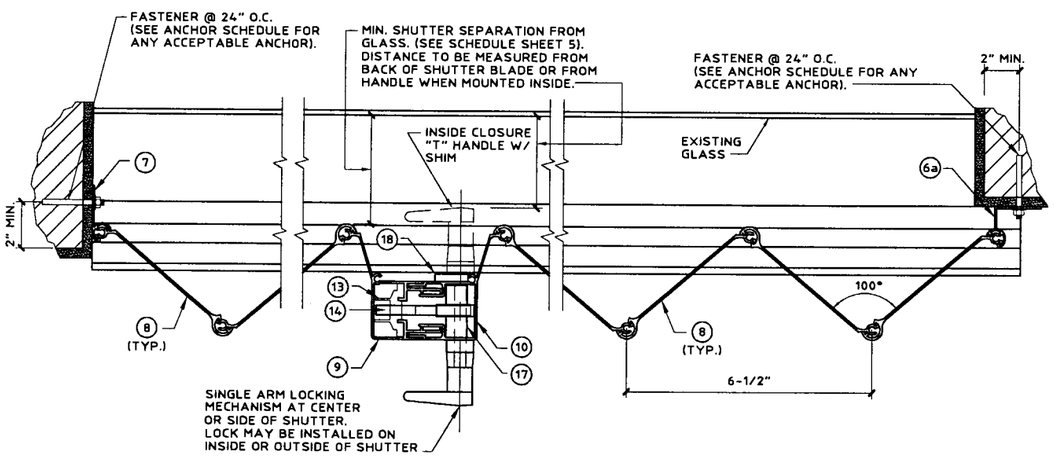


## TYPICAL PLAN VIEW
SCALE: 3" = 1'-0"

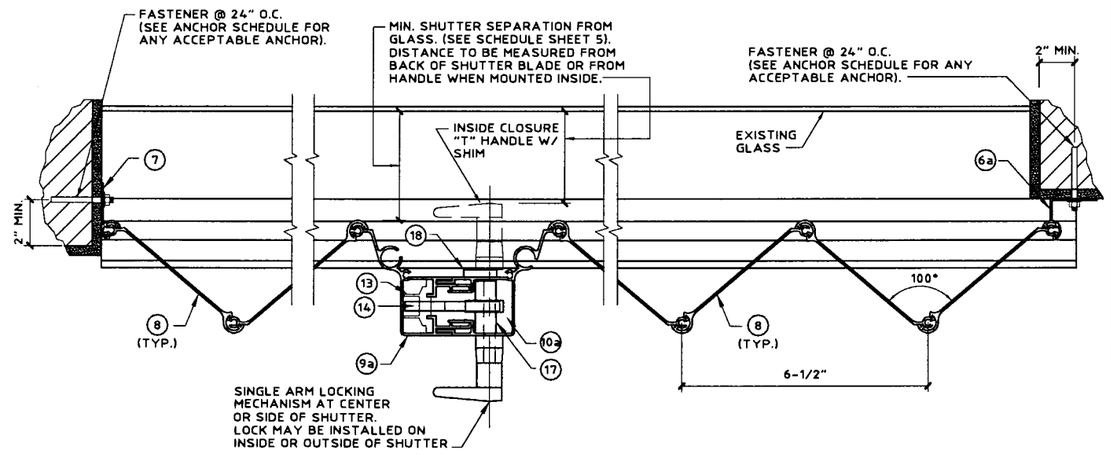


## OPTIONAL PLAN VIEW
SCALE: 3" = 1'-0"

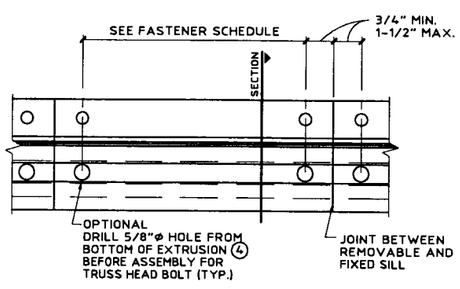


PLAN VIEW

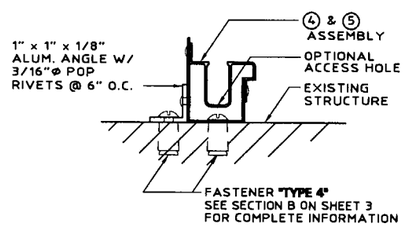


SECTION

## REMOVABLE FLOOR TRACK DETAIL
SCALE : 3"= 1'- 0"

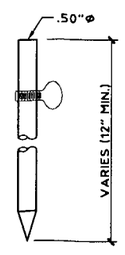


USED WITH PIECES 9a AND 10a

## LOCKING PIN
SCALE: 1-1/2" = 1'-0"

Approved as complying with the Florida Buiding Code
Date 06/17/2002
NOA# 02-0611.06
Miami Dade Product Control Division
By Helmy A. Moh

KNEZEVICH & ASSOCIATES, INC.
CONSULTING ENGINEERS • PRODUCT TESTING
1260 N. UNIVERSITY DRIVE, SUITE 180 • FORT LAUDERDALE, FL 33322
TEL: (954) 382-2800 • FAX: (954) 382-2989 • FLORIDA COA #3205
WEBSITE: WWW.KNEZEVICH.COM • E-MAIL: KA@KNEZEVICH.COM
COPYRIGHT © 2002 KNEZEVICH & ASSOCIATES, INC.
HT100 LICENSED BY HI-TECH SHUTTER GROUP, INC.

HT100
ACCORDION SHUTTER
SLAS, INC.
13894 S.W. 139th COURT
MIAMI, FLORIDA 33186
tel(305) 225-1393 * fax(305) 225-1322

V.J. KNEZEVICH
PROFESSIONAL ENGINEER
FL License No: PE 0010983

JUN 07 2002

revisions

| no | date | by | description |
|---|---|---|---|
| 2 | 10/10/96 | | COUNTY COMMENTS |
| 3 | 11/26/97 | JWK | REVISE FASTENERS |
| 4 | 01/14/98 | JWK | FASTENER NOTES |
| 5 | 06/30/98 | JWK | SLAT 2/REV 2.4 DESC. |
| 6 | 06/10/99 | VJK | CENTER MATES/FASTENERS |
| 7 | 04/02/02 | VJK | FBC2001 GENERAL NOTES |
| 8 | 05/10/02 | AS | GENERAL NOTES |

HTSG I.D. # 051002961680

| | |
|---|---|
| date 07/23/1996 | |
| scale AS NOTED | drawn by MCR |
| design by VJK | checked by VJK |
| drawing no. 00-849 | |
| sheet 2 of 6 | |

Print Information: \\hurricane\ka\CADD\Associations\Hi-Tech\Slas\00-849\R8-sub\00-849-02.dwg MCantu 06/07/2002 11:16:22am

06/07/02 11:05

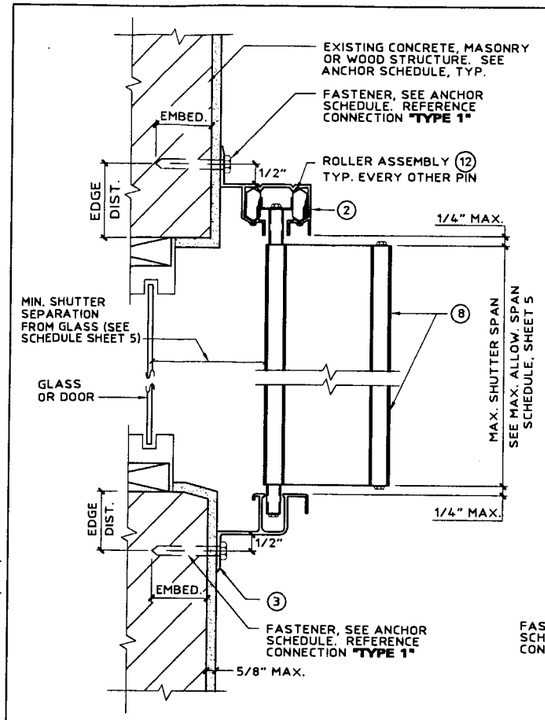


**(A) WALL MOUNT SECTION**
SCALE: 3" = 1'-0"

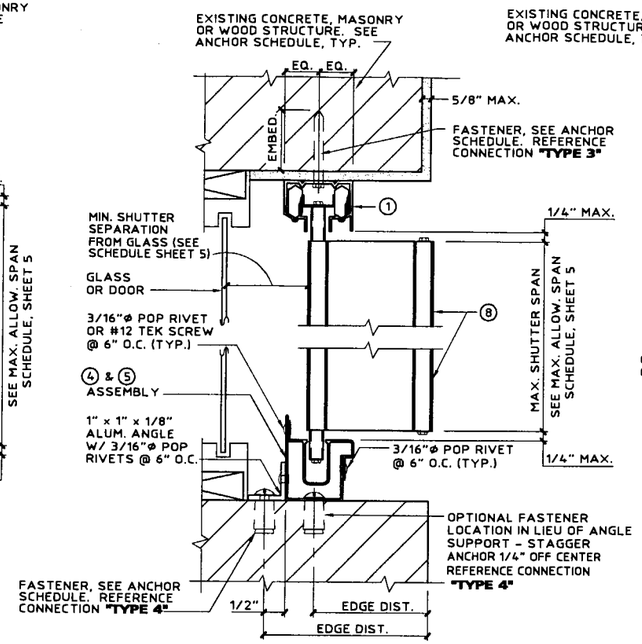


**(B) CEILING/INSIDE MOUNT SECTION**
SCALE: 3" = 1'-0"

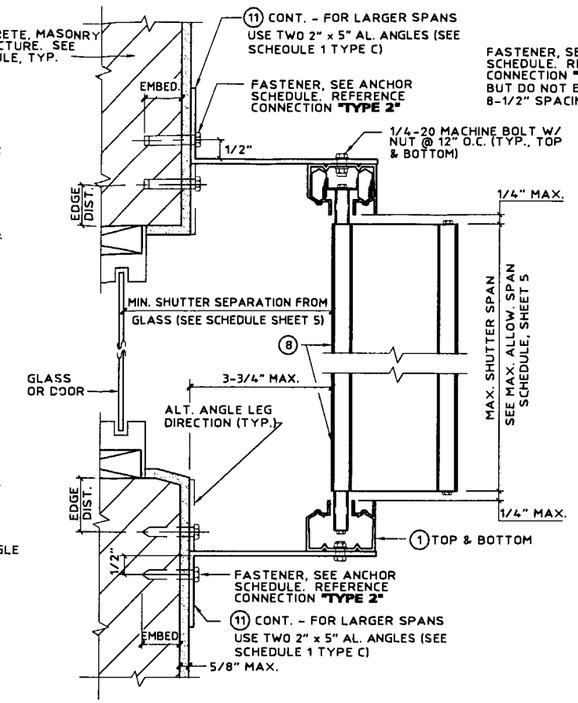


**(C) BUILD-OUT MOUNT SECTION**
SCALE: 3" = 1'-0"

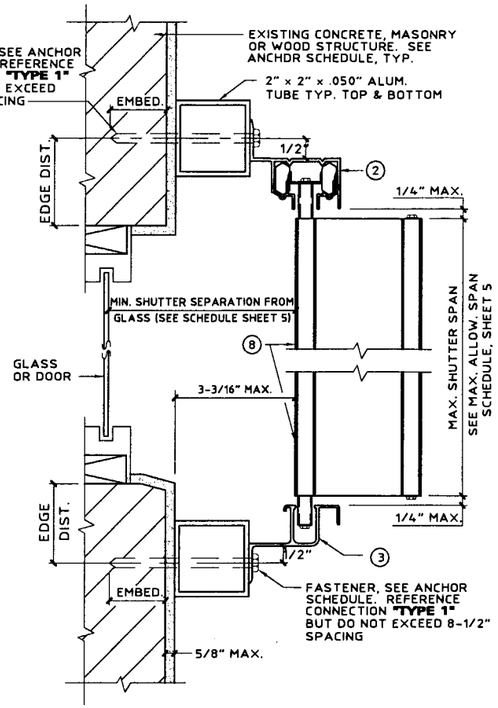


**(D) BUILD-OUT MOUNT SECTION**
SCALE: 3" = 1'-0"

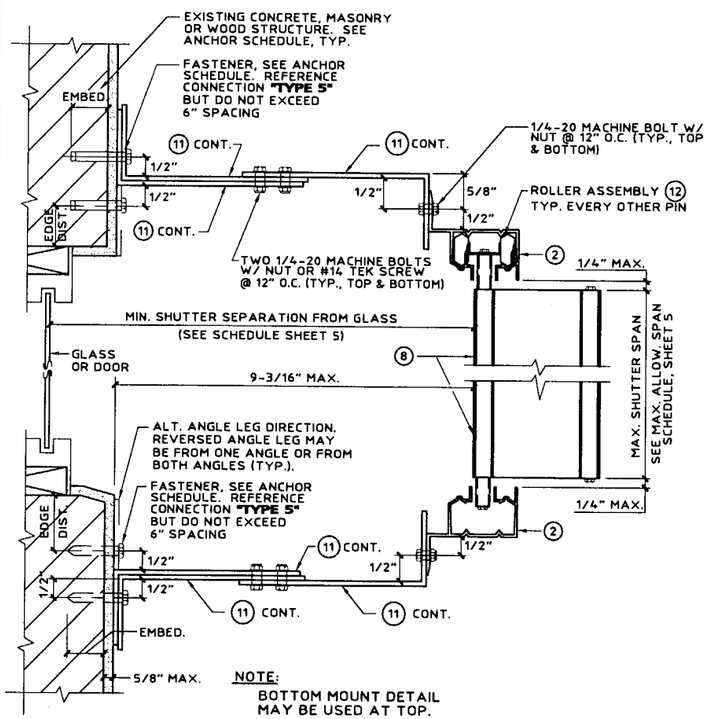


**(E) BUILD-OUT MOUNT SECTION**
SCALE: 3" = 1'-0"

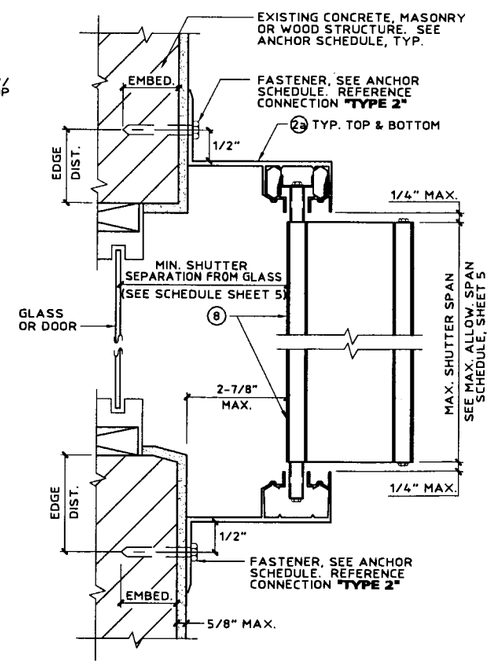


**(F) BUILD-OUT MOUNT SECTION**
SCALE: 3" = 1'-0"

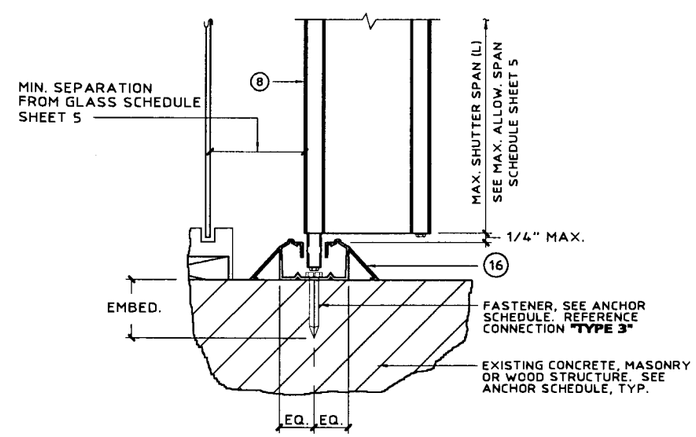


**(G) FLOOR MOUNT SECTION**
SCALE: 3" = 1'-0"

Approved as complying with the Florida Buiding Code
Date 06/17/2002
NOA# 02-0611.06
Miami Dade Product Control Division
By Helmy A. Mekhail


KNEZEVICH & ASSOCIATES, INC.
CONSULTING ENGINEERS • PRODUCT TESTING
1260 N. UNIVERSITY DRIVE, SUITE 180 • FORT LAUDERDALE, FL 33322
TEL: (954) 382-2800 • FAX: (954) 382-2989 • FLORIDA COA #3205
WEBSITE: WWW.KNEZEVICH.COM • E-MAIL: KA@KNEZEVICH.COM


COPYRIGHT © 2002 KNEZEVICH & ASSOCIATES, INC

HT100 LICENSED BY HI-TECH SHUTTER GROUP, INC.

HT100
ACCORDION SHUTTER


SLAS, INC.
13894 S.W. 139th COURT
MIAMI, FLORIDA 33186
tel(305) 225-1393 * fax(305) 225-1322


V.J. KNEZEVICH
PROFESSIONAL ENGINEER
FL License No: PE-0010983
JUN 07 2002

revisions

| no | date | by | description |
|---|---|---|---|
| 2 | 10/10/96 | | COUNTY COMMENTS |
| 3 | 11/26/97 | JWK | REVISE FASTENERS |
| 4 | 01/14/98 | JWK | FASTENER NOTES |
| 5 | 04/30/98 | JWK | SLAT 2/REV 2& DESC. |
| 6 | 06/30/99 | VJK | ENTER MATES/FASTENERS |
| 7 | 04/02/02 | VJK | FBC2001 GENERAL NOTES |
| 8 | 05/10/02 | MAS | GENERAL NOTES |

HTSG I.D. # 051002961168D

| | |
|---|---|
| date 07/23/1996 | |
| scale AS NOTED | drawn by MCR |
| design by VJK | checked by VJK |

drawing no.
00-849
sheet 3 of 6

Print Information: \\hurricane\ka\CADD\Associations\Hi-Tech\Slas\00-849\R8-sub\00-849-03.dwg MCantu 06/07/2002 11:16:34am
06/07/02 11:05

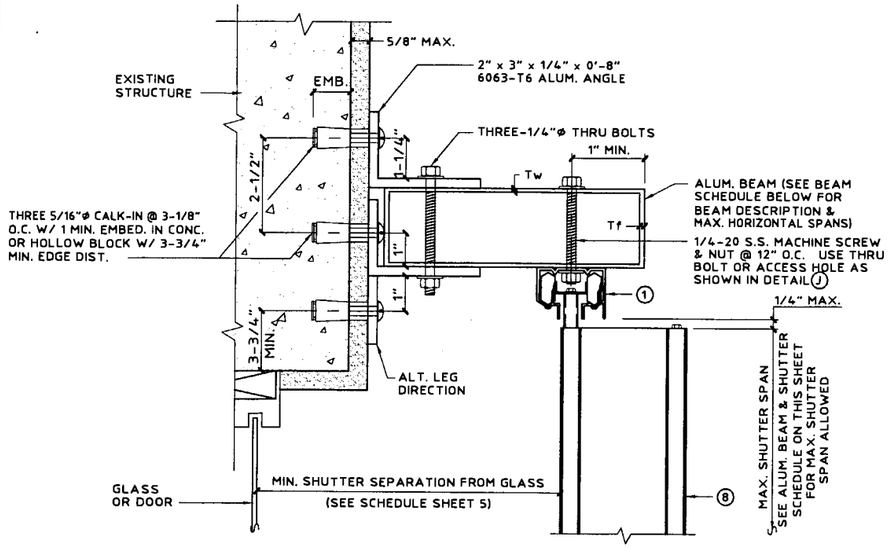


(MAX. DESIGN LOAD ± 72 PSF)

## (H) TOP SUPPORT BEAM DETAIL
SCALE: 3" = 1'-0"

| ALUM. BEAM & SHUTTER SCHEDULE | | |
|---|---|---|
| DESCRIPTION | SHUTTER SPAN | BEAM SPAN |
| 2" x 5" Tw = .125" Tf = .125" | 5'-0" | 9'-5" |
| | 8'-0" | 8'-1" |
| | 10'-0" | 7'-6" |
| 2" x 8" Tw = .072" Tf = .224" | 5'-0" | 14'-0" |
| | 8'-0" | 12'-0" |
| | 10'-0" | 11'-1" |
| 2" x 9" Tw = .072" Tf = .224" | 5'-0" | 15'-5" |
| | 8'-0" | 13'-2" |
| | 10'-0" | 12'-3" |

NOTE:
1. USE BEAM SCHEDULE FOR DETAILS (H) AND (J).
2. SHUTTER SPAN TO BE LIMITED TO THOSE SHOWN IN TABLE, SHEET 5.
3. BEAM SPAN SHALL BE CONSIDERED AS THE DISTANCE FROM C OF SUPPORT TO ℄ OF SUPPORT.

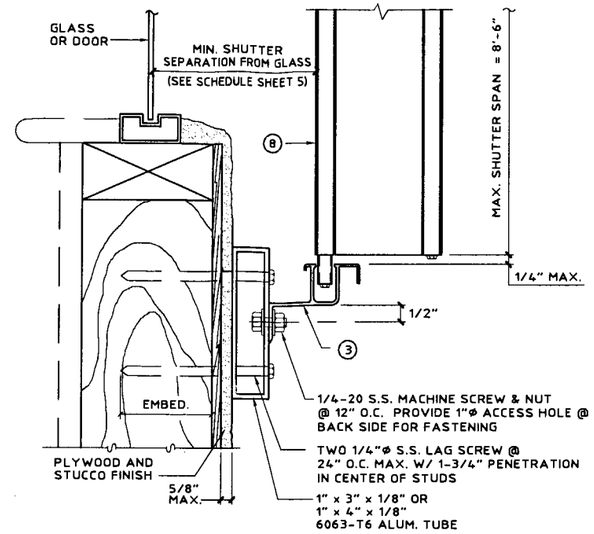


(MAX. DESIGN LOAD ± 72 PSF)

## (I) WALL MOUNT SECTION - USING ALUM. TUBE
SCALE: 3" = 1'-0"

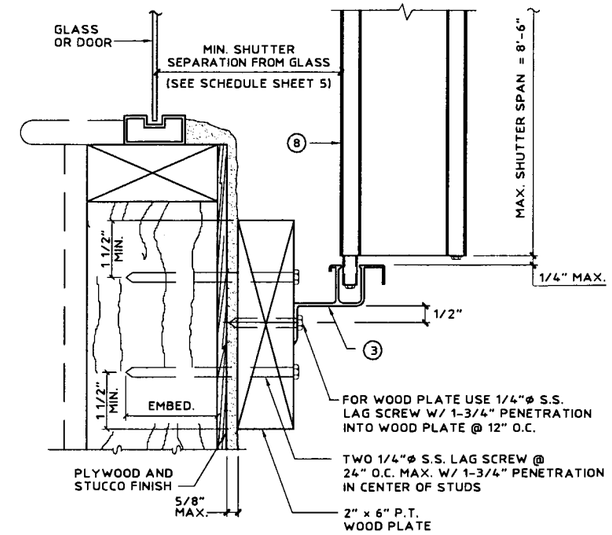


(MAX. DESIGN LOAD ± 72 PSF)

## (K) WALL MOUNT SECTION - USING 2" x 6" WOOD PLATE
SCALE: 3" = 1'-0"

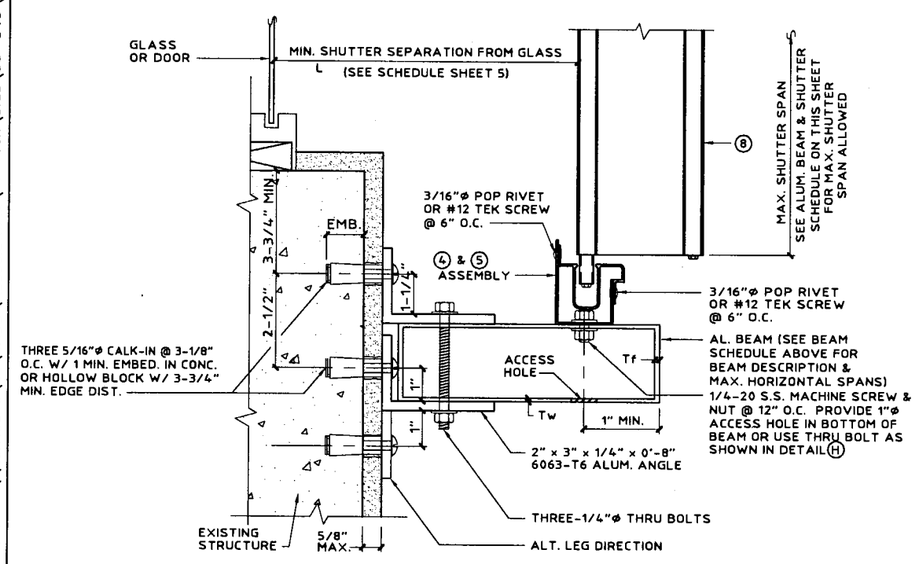


(MAX. DESIGN LOAD ± 72 PSF)

## (J) BOTTOM SUPPORT BEAM DETAIL
SCALE: 3" = 1'-0"

Approved as complying with the Florida Buiding Code
Date 06/17/2002
NOA# 02-0611.06
Miami Dade Product Control Division
By


KNEZEVICH & ASSOCIATES, INC.
CONSULTING ENGINEERS • PRODUCT TESTING
1260 N. UNIVERSITY DRIVE, SUITE 180 • FORT LAUDERDALE, FL 33322
TEL: (954) 382-2800 • FAX: (954) 382-2989 • FLORIDA COA #3205
WEBSITE: WWW.KNEZEVICH.COM • E-MAIL: KA@KNEZEVICH.COM


COPYRIGHT © 2002 KNEZEVICH & ASSOCIATES, INC.

HT100 LICENSED BY HI-TECH SHUTTER GROUP, INC.

HT100
ACCORDION SHUTTER


SLAS, INC.
13894 S.W. 139th COURT
MIAMI, FLORIDA 33186
tel(305) 225-1393 * fax(305) 225-1322


V.J. KNEZEVICH
PROFESSIONAL ENGINEER
Fl. License No: PE 0010983

JUN 17 2002

revisions

| no | date | by | description |
|---|---|---|---|
| 2 | 10/10/96 | | COUNTY COMMENTS |
| 3 | 11/26/97 | JWK | REVISE FASTENERS |
| 4 | 01/14/98 | JWK | FASTENER NOTES |
| 5 | 04/30/98 | JWK | SLAT 2/REV.2,4 DESC. |
| 6 | 06/10/99 | VJK | CENTER MATES/FASTENERS |
| 7 | 04/02/02 | VJK | FBC2001 GENERAL NOTES |
| 8 | 05/10/02 | MAS | GENERAL NOTES |

HTSG I.D. # 05100296168D

date 07/23/1996
scale AS NOTED
drawn by MCR
design by VJK
checked by VJK
drawing no. 00-849
sheet 4 of 6


Print Information: \\hurricane\ka\CADD\Associations\Hi-Tech\Slas\00-849\R8-sub\00-849-04.dwg MCantu 06/07/2002 11:16:42am
06/07/02 11:05

TABLE 1

## MAXIMUM ALLOWABLE SPAN SCHEDULE

| NEG. DESIGN LOAD (PSF) | TYPE A<br>ALL MOUNTING CONDITIONS EXCEPT Ⓒ Ⓔ Ⓕ<br>(FT - IN) | TYPE B<br>DETAIL Ⓕ OR DETAIL Ⓒ W/ SINGLE ANGLE REQUIRED 3-3/4" MAX. B.O.<br>(FT - IN) | TYPE C<br>DETAIL Ⓒ DOUBLE ANGLE REQUIRED 3-3/4" MAX. B.O.<br>(FT - IN) | TYPE D<br>DETAIL Ⓔ 9-3/16" MAX. B.O.<br>(FT - IN) |
|---|---|---|---|---|
| 30.0 | 13 - 1 | 12 - 4 | 13 - 1 | 12 - 7 |
| 38.0 | 13 - 1 | 11 - 0 | 13 - 1 | 11 - 2 |
| 40.0 | 12 - 11 | 10 - 8 | 12 - 5 | 10 - 11 |
| 48.0 | 12 - 4 | 9 - 9 | 10 - 4 | 10 - 0 |
| 52.0 | 12 - 1 | 9 - 4 | 9 - 7 | 9 - 7 |
| 56.0 | 11 - 11 | 9 - 0 | 9 - 0 | 9 - 3 |
| 61.5 | 11 - 7 | 8 - 7 | 8 - 7 | 8 - 10 |
| 63.3 | 11 - 6 | 8 - 6 | 8 - 6 | 8 - 8 |
| 66.8 | 10 - 11 | 8 - 3 | 8 - 3 | 8 - 5 |
| 67.5 | 10 - 9 | 8 - 3 | 8 - 3 | 8 - 5 |
| 71.2 | 10 - 3 | 8 - 0 | 8 - 0 | 8 - 2 |
| 75.0 | 9 - 8 | 7 - 8 | 7 - 8 | 8 - 0 |
| 81.4 | 8 - 11 | 7 - 0 | 7 - 0 | 7 - 4 |
| 86.8 | 8 - 5 | 6 - 7 | 6 - 7 | 6 - 10 |
| 91.4 | 8 - 0 | 6 - 3 | 6 - 3 | 6 - 6 |
| 100.0 | 7 - 3 | 5 - 9 | 5 - 9 | 6 - 0 |
| 110.0 | 6 - 7 | 5 - 2 | 5 - 2 | 5 - 5 |
| 120.0 | 6 - 1 | 4 - 9 | 4 - 9 | 5 - 0 |
| 130.0 | 5 - 7 | 4 - 5 | 4 - 5 | 4 - 7 |
| 140.0 | 5 - 2 | 4 - 1 | 4 - 1 | 4 - 3 |
| 150.0 | 4 - 10 | 3 - 10 | 3 - 10 | 4 - 0 |
| 160.0 | 4 - 6 | 3 - 7 | 3 - 7 | 3 - 9 |
| 170.0 | 4 - 3 | 3 - 4 | 3 - 4 | 3 - 6 |
| 180.0 | 4 - 0 | 3 - 2 | 3 - 2 | 3 - 4 |
| 190.0 | 3 - 10 | 3 - 0 | 3 - 0 | 3 - 1 |
| 200.0 | 3 - 7 | 2 - 10 | 2 - 10 | 3 - 0 |
| 210.0 | 3 - 5 | 2 - 8 | 2 - 8 | 2 - 10 |

NOTES:

1. REFERENCE APPROPRIATE COLUMN IN TABLE 1 BASED ON MOUNTING CONDITION IN FIELD.
2. FOR DESIGN LOADS BETWEEN TABULATED VALUES, USE NEXT HIGHER LOAD OR LINEAR INTERPOLATION MAY BE USED TO DETERMINE ALLOWABLE SPANS.
3. ENTER TABLE 1 WITH NEGATIVE DESIGN LOAD TO DETERMINE MAX. SHUTTER SPAN.
4. ENTER TABLE 2 WITH POSITIVE DESIGN LOAD TO DETERMINE MIN. SHUTTER SEPARATION FROM GLASS.

TABLE 2

## MINIMUM SHUTTER SEPARATION FROM GLASS (IN)

| POSITIVE DESIGN LOAD (W) (PSF) | ACTUAL SPAN (FT - IN) | MIN. SEPARATION FROM GLASS FOR INSTALLATIONS LESS THAN 30' ABOVE GRADE (INCHES) | MIN. SEPARATION FROM GLASS FOR INSTALLATIONS GREATER THAN 30' ABOVE GRADE (INCHES) |
|---|---|---|---|
| 30.0 | 5 - 0 | 2-7/8 | 1-1/2 |
| | 7 - 0 | 2-7/8 | 1-5/8 |
| | 8 - 0 | 2-7/8 | 1-5/8 |
| | 11 - 0 | 3 | 2-1/8 |
| | 13 - 1 | 3-3/4 | 2-3/4 |
| 40.0 | 5 - 0 | 2-7/8 | 1-1/2 |
| | 7 - 0 | 2-7/8 | 1-5/8 |
| | 8 - 0 | 2-7/8 | 1-5/8 |
| | 11 - 0 | 3 | 2-1/4 |
| | 12 - 11 | 3-3/4 | 3 |
| 50.0 | 5 - 0 | 2-7/8 | 1-1/2 |
| | 7 - 0 | 2-7/8 | 1-5/8 |
| | 8 - 0 | 2-7/8 | 1-3/4 |
| | 11 - 0 | 3 | 2-1/2 |
| | 12 - 2 | 3-3/4 | 3 |
| 60.0 | 5 - 0 | 2-7/8 | 1-1/2 |
| | 7 - 0 | 2-7/8 | 1-5/8 |
| | 8 - 0 | 2-7/8 | 1-3/4 |
| | 11 - 0 | 3 | 1-3/4 |
| | 11 - 8 | 3-3/4 | 3 |
| 70.0 | 5 - 0 | 2-7/8 | 1-1/2 |
| | 7 - 0 | 2-7/8 | 1-5/8 |
| | 8 - 0 | 2-7/8 | 1-7/8 |
| | 9 - 6 | 3 | 2-1/4 |
| | 10 - 4 | 3 | 2-5/8 |
| 80.0 | 5 - 0 | 2-7/8 | 1-1/2 |
| | 7 - 0 | 2-7/8 | 1-3/4 |
| | 8 - 0 | 2-7/8 | 1-7/8 |
| | 11 - 0 | 3-1/8 | 3-1/8 |
| | 12 - 1 | 4 | 4 |
| 90.0 | 5 - 0 | 2-7/8 | 1-1/2 |
| | 7 - 0 | 2-7/8 | 1-3/4 |
| | 8 - 0 | 2-7/8 | 2 |
| | 11 - 0 | 3-3/8 | 3-3/8 |
| | 11 - 6 | 3-7/8 | 4 |
| 100.0 | 5 - 0 | 2-7/8 | 1-1/2 |
| | 7 - 0 | 2-7/8 | 1-3/4 |
| | 8 - 0 | 2-7/8 | 2 |
| | 9 - 0 | 3 | 2-3/4 |
| | 10 - 3 | 3 | 3 |

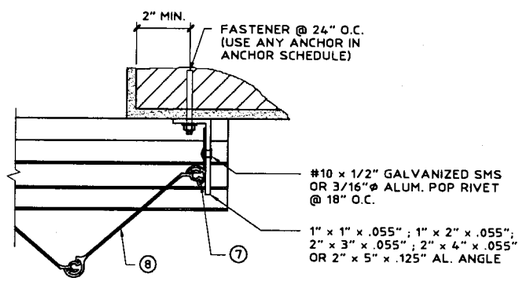


**L ALT. CLOSURE DETAIL**
SCALE: 3" = 1'-0"

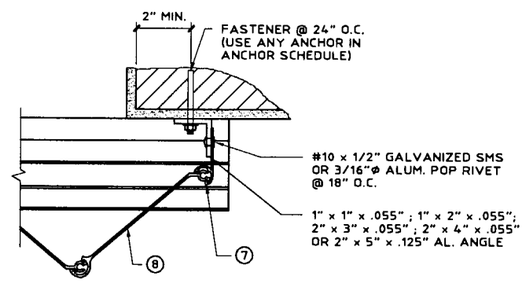


**M ALT. CLOSURE DETAIL**
SCALE: 3" = 1'-0"

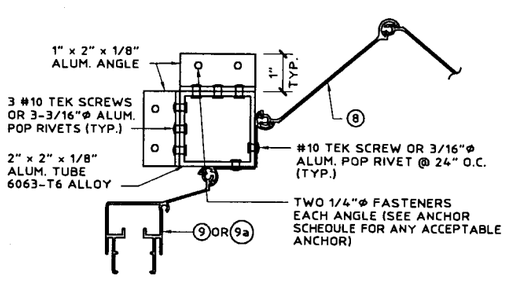


NOTE:
EITHER CONDITION MAY BE TYPICAL FOR EITHER SIDE

**N CORNER CLOSURE DETAIL**
SCALE: 3" = 1'-0"

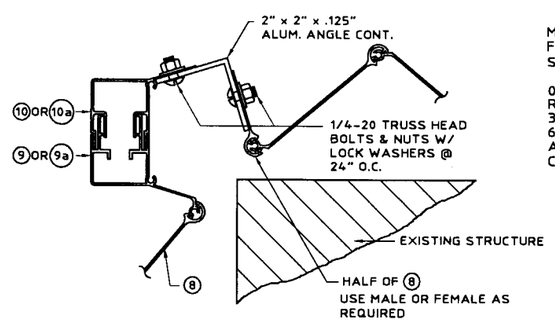


**P ALT. CORNER CLOSURE DETAIL**
SCALE: 3" = 1'-0"

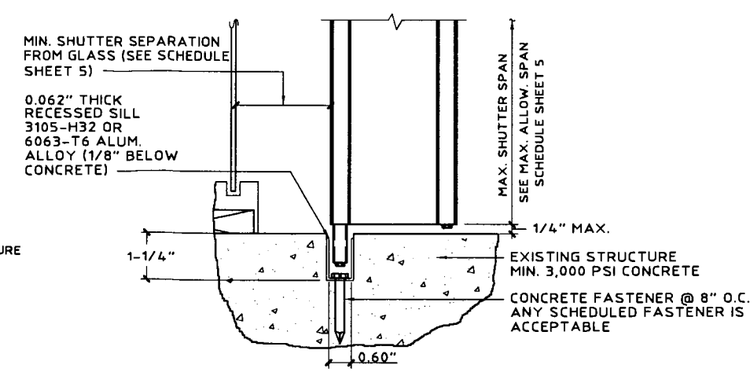


**Q ALTERNATE FLOOR MOUNT DETAIL**
SCALE: 3" = 1'-0"

Approved as complying with the Florida Buiding Code
Date 06/17/2002
NOA# 02-0611.06
Miami Dade Product Control Division
By


KNEZEVICH & ASSOCIATES, INC.
CONSULTING ENGINEERS • PRODUCT TESTING
1260 N. UNIVERSITY DRIVE, SUITE 180 • FORT LAUDERDALE, FL 33322
TEL: (954) 382-2800 • FAX: (954) 382-2989 • FLORIDA COA #3205
WEBSITE: WWW.KNEZEVICH.COM • E-MAIL: KA@KNEZEVICH.COM


COPYRIGHT © 2002 KNEZEVICH & ASSOCIATES, INC.

HT100 LICENSED BY HI-TECH SHUTTER GROUP, INC.

HT100
ACCORDION SHUTTER
SLAS, INC.
13894 S.W. 139th COURT
MIAMI, FLORIDA 33186
tel(305) 225-1393 * fax(305) 225-1322

V.J. KNEZEVICH
PROFESSIONAL ENGINEER
FL License No. PE 0010983
JUN 07 2002

revisions

| no | date | by | description |
|---|---|---|---|
| 2 | 10/10/96 | | COUNTY COMMENTS |
| 3 | 11/26/97 | JWK | REVISE FASTENERS |
| 4 | 07/14/98 | JWK | FASTENER NOTES |
| 5 | 04/30/98 | JWK | SLAT 2/REV.2,4 DESC. |
| 6 | 06/10/99 | VJK | CENTER MATES/FASTENERS |
| 7 | 04/02/02 | VJK | FBC2001 GENERAL NOTES |
| 8 | 05/10/02 | KAS | GENERAL NOTES |

HTSG I.D. # 051002961680

| | |
|---|---|
| date 07/23/1996 | |
| scale AS NOTED | drawn by MCR |
| design by VJK | checked by VJK |

drawing no.
00-849
sheet 5 of 6

Print Information: \\hurricane\ka\CADD\Associations\Hi-Tech\Slas\00-849\R8-sub\00-849-05.dwg MCantu 06/07/2002 11:16:50am

06/07/02 11:05

# ANCHOR SCHEDULE

**FASTENER MAXIMUM SPACING (INCHES) REQUIRED FOR VARIOUS DESIGN LOADS AND SPANS**

**MIN. 2" EDGE DISTANCE**

| EXISTING STRUCTURE | ANCHOR TYPE | LOAD (W) PSF MAX. (SEE NOTE 1) | SPANS UP TO 5'-8" (SEE NOTE 1) | | | | | SPANS UP TO 8'-0" (SEE NOTE 1) | | | | | SPANS UP TO 9'-0" (SEE NOTE 1) | | | | | SPANS UP TO 13'-1" (SEE NOTE 1) | | | | |
|---|---|---|---|---|---|---|---|---|---|---|---|---|---|---|---|---|---|---|---|---|---|---|
| | | CONNECTION TYPE | 1 | 2 | 3 | 4 | 5 | 1 | 2 | 3 | 4 | 5 | 1 | 2 | 3 | 4 | 5 | 1 | 2 | 3 | 4 | 5 |
| CONCRETE | 1/4"φ ITW TAPCON W/ 1-1/4" MIN. EMBEDMENT (MIN. 3,100 P.S.I. CONCRETE) | 48.0 | 12 | 12 | 12 | 7 | 9 | 12 | 12 | 10 | 5 | 7 | 12 | 12 | 9 | 4 | 6 | 6 | 12 | 6 | 3 | 4 |
| | | 62.0 | 12 | 12 | 11 | 5 | 7 | 12 | 12 | 8 | 3 | 5 | 9 | 12 | 7 | 3 | 4 | 4 | 11 | 5 | ▨ | 3 |
| | | 72.0 | 12 | 12 | 10 | 4 | 6 | 8 | 12 | 7 | 3 | 4 | 5 | 12 | 6 | 3 | 4 | 4 | 11 | 5 | ▨ | 3 |
| | | 92.0 | 11 | 12 | 7 | 3 | 5 | 4 | 11 | 5 | ▨ | 3 | 4 | 11 | 5 | ▨ | 3 | 4 | 11 | 5 | ▨ | 3 |
| | | 210.0 | 4 | 11 | 5 | ▨ | 3 | 4 | 11 | 5 | ▨ | 3 | 4 | 11 | 5 | ▨ | 3 | 4 | 11 | 5 | ▨ | 3 |
| | * * 1/4"φ ELCO MALE/ FEMALE "PANELMATE" W/ 1-1/4 MIN. EMBEDMENT & 1/4-20 MACHINE SCREW WITH NUT (MIN. 3,000 P.S.I. CONCRETE) | 48.0 | 12 | 12 | 11 | 5 | 7 | 12 | 12 | 8 | 3 | 5 | 12 | 12 | 7 | 3 | 5 | 5 | 10 | 4 | ▨ | 3 |
| | | 62.0 | 12 | 12 | 8 | 4 | 6 | 11 | 12 | 6 | 3 | 4 | 7 | 11 | 5 | ▨ | 3 | 3 | 8 | 4 | ▨ | ▨ |
| | | 72.0 | 12 | 12 | 7 | 3 | 5 | 6 | 11 | 5 | ▨ | 3 | 4 | 9 | 4 | ▨ | 3 | 3 | 8 | 4 | ▨ | ▨ |
| | | 92.0 | 9 | 12 | 5 | ▨ | 4 | 3 | 8 | 4 | ▨ | ▨ | 3 | 8 | 4 | ▨ | ▨ | 3 | 8 | 4 | ▨ | ▨ |
| | | 210.0 | 3 | 8 | 4 | ▨ | ▨ | 3 | 8 | 4 | ▨ | ▨ | 3 | 8 | 4 | ▨ | ▨ | 3 | 8 | 4 | ▨ | ▨ |
| | * 1/4"φ POWERS CALK-IN W/ 7/8" EMBEDMENT & 1/4-20 STAINLESS STEEL MACHINE SCREW (MIN. 3,000 P.S.I. CONCRETE) | 48.0 | 12 | 12 | 12 | 9 | 12 | 12 | 12 | 11 | 6 | 11 | 12 | 12 | 10 | 6 | 10 | 10 | 12 | 7 | 4 | 7 |
| | | 62.0 | 12 | 12 | 12 | 7 | 12 | 12 | 12 | 9 | 5 | 9 | 12 | 12 | 8 | 4 | 8 | 7 | 12 | 6 | 3 | 6 |
| | | 72.0 | 12 | 12 | 11 | 6 | 11 | 12 | 12 | 7 | 4 | 7 | 9 | 12 | 7 | 4 | 6 | 7 | 12 | 6 | 3 | 6 |
| | | 92.0 | 12 | 12 | 8 | 5 | 8 | 7 | 12 | 6 | 3 | 6 | 7 | 12 | 6 | 3 | 6 | 7 | 12 | 6 | 3 | 6 |
| | | 210.0 | 7 | 12 | 6 | 3 | 6 | 7 | 12 | 6 | 3 | 6 | 7 | 12 | 6 | 3 | 6 | 7 | 12 | 6 | 3 | 6 |
| | 1/4"φ POWERS ZAMAC NAIL-IN W/ 1-1/8" MIN. EMBEDMENT (MIN. 3,000 P.S.I. CONCRETE) | 48.0 | 12 | 12 | 12 | 5 | 8 | 12 | 12 | 9 | 4 | 5 | 12 | 12 | 8 | 3 | 5 | 5 | 10 | 5 | ▨ | 3 |
| | | 62.0 | 12 | 12 | 10 | 4 | 6 | 12 | 12 | 7 | 3 | 4 | 7 | 11 | 6 | ▨ | 3 | 3 | 9 | 4 | ▨ | 3 |
| | | 72.0 | 12 | 12 | 8 | 3 | 5 | 6 | 11 | 6 | ▨ | 3 | 4 | 10 | 5 | ▨ | 3 | 3 | 9 | 4 | ▨ | 3 |
| | | 92.0 | 9 | 12 | 6 | 3 | 4 | 3 | 9 | 4 | ▨ | 3 | 3 | 9 | 4 | ▨ | 3 | 3 | 9 | 4 | ▨ | 3 |
| | | 210.0 | 3 | 9 | 4 | ▨ | 3 | 3 | 9 | 4 | ▨ | 3 | 3 | 9 | 4 | ▨ | 3 | 3 | 9 | 4 | ▨ | 3 |
| HOLLOW CONCRETE BLOCK | 1/4"φ ITW TAPCON W/ 1-1/4" MIN. EMBEDMENT | 48.0 | 12 | 12 | 9 | 4 | 5 | 11 | 11 | 6 | ▨ | 3 | 10 | 10 | 5 | ▨ | 3 | 3 | 6 | 3 | ▨ | ▨ |
| | | 62.0 | 12 | 12 | 6 | 3 | 4 | 8 | 8 | 4 | ▨ | ▨ | 4 | 7 | 4 | ▨ | ▨ | ▨ | 5 | 3 | ▨ | ▨ |
| | | 72.0 | 10 | 10 | 6 | ▨ | 3 | 4 | 7 | 4 | ▨ | ▨ | 3 | 6 | 3 | ▨ | ▨ | ▨ | 5 | 3 | ▨ | ▨ |
| | | 92.0 | 6 | 8 | 4 | ▨ | ▨ | ▨ | 5 | 3 | ▨ | ▨ | ▨ | 5 | 3 | ▨ | ▨ | ▨ | 5 | 3 | ▨ | ▨ |
| | | 210.0 | ▨ | 5 | 3 | ▨ | ▨ | ▨ | 5 | 3 | ▨ | ▨ | ▨ | 5 | 3 | ▨ | ▨ | ▨ | 5 | 3 | ▨ | ▨ |
| | * * 1/4"φ ELCO MALE/ FEMALE "PANELMATE" W/ 1-1/4 MIN. EMBEDMENT & 1/4-20 MACHINE SCREW WITH NUT | 48.0 | 12 | 12 | 11 | 5 | 7 | 12 | 12 | 8 | 3 | 5 | 12 | 12 | 7 | 3 | 5 | 5 | 10 | 4 | ▨ | 3 |
| | | 62.0 | 12 | 12 | 8 | 4 | 6 | 11 | 12 | 6 | 3 | 4 | 7 | 11 | 5 | ▨ | 3 | 3 | 8 | 4 | ▨ | ▨ |
| | | 72.0 | 12 | 12 | 7 | 3 | 5 | 6 | 11 | 5 | ▨ | 3 | 4 | 9 | 4 | ▨ | 3 | 3 | 8 | 4 | ▨ | ▨ |
| | | 92.0 | 9 | 12 | 5 | ▨ | 4 | 3 | 8 | 4 | ▨ | ▨ | 3 | 8 | 4 | ▨ | ▨ | 3 | 8 | 4 | ▨ | ▨ |
| | | 210.0 | 3 | 8 | 4 | ▨ | ▨ | 3 | 8 | 4 | ▨ | ▨ | 3 | 8 | 4 | ▨ | ▨ | 3 | 8 | 4 | ▨ | ▨ |
| | * 1/4"φ POWERS CALK-IN W/ 7/8" EMBEDMENT & 1/4-20 STAINLESS STEEL MACHINE SCREW | 48.0 | 12 | 12 | 9 | 4 | 6 | 12 | 12 | 6 | 3 | 4 | 12 | 12 | 6 | 3 | 4 | 4 | 8 | 4 | ▨ | 3 |
| | | 62.0 | 12 | 12 | 7 | 3 | 5 | 10 | 11 | 5 | ▨ | 3 | 6 | 10 | 4 | ▨ | 3 | 3 | 7 | 3 | ▨ | ▨ |
| | | 72.0 | 12 | 12 | 6 | 3 | 4 | 5 | 9 | 4 | ▨ | 3 | 4 | 8 | 4 | ▨ | ▨ | 3 | 7 | 3 | ▨ | ▨ |
| | | 92.0 | 8 | 10 | 5 | ▨ | 3 | 3 | 7 | 3 | ▨ | ▨ | 3 | 7 | 3 | ▨ | ▨ | 3 | 7 | 3 | ▨ | ▨ |
| | | 210.0 | 3 | 7 | 3 | ▨ | ▨ | 3 | 7 | 3 | ▨ | ▨ | 3 | 7 | 3 | ▨ | ▨ | 3 | 7 | 3 | ▨ | ▨ |
| | 1/4"φ POWERS ZAMAC NAIL-IN W/ 1-1/8" MIN. EMBEDMENT | 48.0 | 12 | 12 | 9 | 4 | 5 | 10 | 10 | 6 | ▨ | 3 | 9 | 9 | 6 | ▨ | 3 | 3 | 6 | 4 | ▨ | ▨ |
| | | 62.0 | 11 | 11 | 7 | 3 | 4 | 7 | 8 | 5 | ▨ | ▨ | 4 | 7 | 4 | ▨ | ▨ | ▨ | 5 | 3 | ▨ | ▨ |
| | | 72.0 | 10 | 10 | 6 | ▨ | 3 | 4 | 7 | 4 | ▨ | ▨ | ▨ | 6 | 4 | ▨ | ▨ | ▨ | 5 | 3 | ▨ | ▨ |
| | | 92.0 | 6 | 8 | 4 | ▨ | ▨ | ▨ | 5 | 3 | ▨ | ▨ | ▨ | 5 | 3 | ▨ | ▨ | ▨ | 5 | 3 | ▨ | ▨ |
| | | 210.0 | ▨ | 5 | 3 | ▨ | ▨ | ▨ | 5 | 3 | ▨ | ▨ | ▨ | 5 | 3 | ▨ | ▨ | ▨ | 5 | 3 | ▨ | ▨ |

**MIN. 3" EDGE DISTANCE**

| EXISTING STRUCTURE | ANCHOR TYPE | LOAD (W) PSF MAX. (SEE NOTE 1) | SPANS UP TO 5'-8" (SEE NOTE 1) | | | | | SPANS UP TO 8'-0" (SEE NOTE 1) | | | | | SPANS UP TO 9'-0" (SEE NOTE 1) | | | | | SPANS UP TO 13'-1" (SEE NOTE 1) | | | | |
|---|---|---|---|---|---|---|---|---|---|---|---|---|---|---|---|---|---|---|---|---|---|---|
| | | CONNECTION TYPE | 1 | 2 | 3 | 4 | 5 | 1 | 2 | 3 | 4 | 5 | 1 | 2 | 3 | 4 | 5 | 1 | 2 | 3 | 4 | 5 |
| CONCRETE | 1/4"φ ITW TAPCON W/ 1-1/4" MIN. EMBEDMENT (MIN. 3,100 P.S.I. CONCRETE) | 48.0 | 12 | 12 | 12 | 8 | 11 | 12 | 12 | 12 | 5 | 7 | 12 | 12 | 11 | 5 | 7 | 7 | 12 | 8 | 3 | 4 |
| | | 62.0 | 12 | 12 | 12 | 6 | 8 | 12 | 12 | 10 | 4 | 6 | 10 | 12 | 9 | 4 | 5 | 4 | 12 | 7 | 3 | 4 |
| | | 72.0 | 12 | 12 | 12 | 5 | 7 | 9 | 12 | 8 | 3 | 5 | 6 | 12 | 7 | 3 | 4 | 4 | 12 | 7 | 3 | 4 |
| | | 92.0 | 12 | 12 | 9 | 4 | 5 | 4 | 12 | 7 | 3 | 4 | 4 | 12 | 7 | 3 | 4 | 4 | 12 | 7 | 3 | 4 |
| | | 210.0 | 4 | 12 | 7 | 3 | 4 | 4 | 12 | 7 | 3 | 4 | 4 | 12 | 7 | 3 | 4 | 4 | 12 | 7 | 3 | 4 |
| | * * 1/4"φ ELCO MALE/ FEMALE "PANELMATE" W/ 1-1/4 MIN. EMBEDMENT & 1/4-20 MACHINE SCREW WITH NUT (MIN. 3,000 P.S.I. CONCRETE) | 48.0 | 12 | 12 | 12 | 6 | 8 | 12 | 12 | 9 | 4 | 5 | 12 | 12 | 8 | 3 | 5 | 5 | 10 | 5 | ▨ | 3 |
| | | 62.0 | 12 | 12 | 10 | 4 | 6 | 12 | 12 | 7 | 3 | 4 | 7 | 11 | 6 | ▨ | 4 | 3 | 9 | 4 | ▨ | 3 |
| | | 72.0 | 12 | 12 | 8 | 4 | 5 | 6 | 11 | 6 | ▨ | 3 | 4 | 10 | 5 | ▨ | 3 | 3 | 9 | 4 | ▨ | 3 |
| | | 92.0 | 9 | 12 | 6 | 3 | 4 | 3 | 9 | 4 | ▨ | 3 | 3 | 9 | 4 | ▨ | 3 | 3 | 9 | 4 | ▨ | 3 |
| | | 210.0 | 3 | 9 | 4 | ▨ | 3 | 3 | 9 | 4 | ▨ | 3 | 3 | 9 | 4 | ▨ | 3 | 3 | 9 | 4 | ▨ | 3 |
| | * 1/4"φ POWERS CALK-IN W/ 7/8" EMBEDMENT & 1/4-20 STAINLESS STEEL MACHINE SCREW (MIN. 3,000 P.S.I. CONCRETE) | 48.0 | 12 | 12 | 12 | 12 | 12 | 12 | 12 | 12 | 9 | 12 | 12 | 12 | 12 | 8 | 12 | 12 | 12 | 11 | 6 | 8 |
| | | 62.0 | 12 | 12 | 12 | 10 | 12 | 12 | 12 | 12 | 7 | 11 | 12 | 12 | 12 | 6 | 10 | 9 | 12 | 10 | 5 | 7 |
| | | 72.0 | 12 | 12 | 12 | 9 | 12 | 12 | 12 | 12 | 6 | 9 | 12 | 12 | 11 | 5 | 8 | 9 | 12 | 10 | 5 | 7 |
| | | 92.0 | 12 | 12 | 12 | 7 | 10 | 9 | 12 | 10 | 5 | 7 | 9 | 12 | 10 | 5 | 7 | 9 | 12 | 10 | 5 | 7 |
| | | 210.0 | 9 | 12 | 10 | 5 | 7 | 9 | 12 | 10 | 5 | 7 | 9 | 12 | 10 | 5 | 7 | 9 | 12 | 10 | 5 | 7 |
| | 1/4"φ POWERS ZAMAC NAIL-IN W/ 1-1/8" MIN. EMBEDMENT (MIN. 3,000 P.S.I. CONCRETE) | 48.0 | 12 | 12 | 12 | 7 | 9 | 12 | 12 | 11 | 4 | 6 | 12 | 12 | 10 | 4 | 5 | 5 | 11 | 6 | 3 | 3 |
| | | 62.0 | 12 | 12 | 12 | 5 | 7 | 12 | 12 | 8 | 3 | 5 | 8 | 12 | 7 | 3 | 4 | 3 | 10 | 5 | ▨ | 3 |
| | | 72.0 | 12 | 12 | 10 | 4 | 6 | 7 | 12 | 7 | 3 | 4 | 5 | 11 | 6 | ▨ | 3 | 3 | 10 | 5 | ▨ | 3 |
| | | 92.0 | 10 | 12 | 8 | 3 | 4 | 3 | 10 | 5 | ▨ | 3 | 3 | 10 | 5 | ▨ | 3 | 3 | 10 | 5 | ▨ | 3 |
| | | 210.0 | 3 | 10 | 5 | ▨ | 3 | 3 | 10 | 5 | ▨ | 3 | 3 | 10 | 5 | ▨ | 3 | 3 | 10 | 5 | ▨ | 3 |
| HOLLOW CONCRETE BLOCK | 1/4"φ ITW TAPCON W/ 1-1/4" MIN. EMBEDMENT | 48.0 | 12 | 12 | 11 | 4 | 6 | 12 | 12 | 7 | 3 | 4 | 11 | 11 | 6 | ▨ | 3 | 3 | 7 | 4 | ▨ | ▨ |
| | | 62.0 | 12 | 12 | 8 | 3 | 4 | 9 | 9 | 6 | ▨ | 3 | 5 | 8 | 5 | ▨ | ▨ | ▨ | 6 | 4 | ▨ | ▨ |
| | | 72.0 | 12 | 12 | 7 | 3 | 4 | 4 | 8 | 5 | ▨ | ▨ | 3 | 7 | 4 | ▨ | ▨ | ▨ | 6 | 4 | ▨ | ▨ |
| | | 92.0 | 7 | 9 | 5 | ▨ | 3 | ▨ | 6 | 4 | ▨ | ▨ | ▨ | 6 | 4 | ▨ | ▨ | ▨ | 6 | 4 | ▨ | ▨ |
| | | 210.0 | ▨ | 6 | 4 | ▨ | ▨ | ▨ | 6 | 4 | ▨ | ▨ | ▨ | 6 | 4 | ▨ | ▨ | ▨ | 6 | 4 | ▨ | ▨ |
| | * * 1/4"φ ELCO MALE/ FEMALE "PANELMATE" W/ 1-1/4 MIN. EMBEDMENT & 1/4-20 MACHINE SCREW WITH NUT | 48.0 | 12 | 12 | 12 | 6 | 8 | 12 | 12 | 9 | 4 | 5 | 12 | 12 | 8 | 3 | 5 | 5 | 10 | 5 | ▨ | 3 |
| | | 62.0 | 12 | 12 | 10 | 4 | 6 | 12 | 12 | 7 | 3 | 4 | 7 | 11 | 6 | ▨ | 4 | 3 | 9 | 4 | ▨ | 3 |
| | | 72.0 | 12 | 12 | 8 | 4 | 5 | 6 | 11 | 6 | ▨ | 3 | 4 | 10 | 5 | ▨ | 3 | 3 | 9 | 4 | ▨ | 3 |
| | | 92.0 | 9 | 12 | 6 | 3 | 4 | 3 | 9 | 4 | ▨ | 3 | 3 | 9 | 4 | ▨ | 3 | 3 | 9 | 4 | ▨ | 3 |
| | | 210.0 | 3 | 9 | 4 | ▨ | 3 | 3 | 9 | 4 | ▨ | 3 | 3 | 9 | 4 | ▨ | 3 | 3 | 9 | 4 | ▨ | 3 |
| | * 1/4"φ POWERS CALK-IN W/ 7/8" EMBEDMENT & 1/4-20 STAINLESS STEEL MACHINE SCREW | 48.0 | 12 | 12 | 12 | 6 | 8 | 12 | 12 | 10 | 4 | 6 | 12 | 12 | 9 | 4 | 5 | 5 | 11 | 6 | ▨ | 3 |
| | | 62.0 | 12 | 12 | 11 | 5 | 6 | 12 | 12 | 8 | 3 | 4 | 7 | 12 | 7 | 3 | 4 | 3 | 9 | 5 | ▨ | 3 |
| | | 72.0 | 12 | 12 | 10 | 4 | 5 | 7 | 12 | 7 | 3 | 4 | 5 | 10 | 6 | ▨ | 3 | 3 | 9 | 5 | ▨ | 3 |
| | | 92.0 | 10 | 12 | 7 | 3 | 4 | 3 | 9 | 5 | ▨ | 3 | 3 | 9 | 5 | ▨ | 3 | 3 | 9 | 5 | ▨ | 3 |
| | | 210.0 | 3 | 9 | 5 | ▨ | 3 | 3 | 9 | 5 | ▨ | 3 | 3 | 9 | 5 | ▨ | 3 | 3 | 9 | 5 | ▨ | 3 |
| | 1/4"φ POWERS ZAMAC NAIL-IN W/ 1-1/8" MIN. EMBEDMENT | 48.0 | 12 | 12 | 11 | 4 | 5 | 12 | 12 | 8 | 3 | 4 | 10 | 10 | 7 | ▨ | 3 | 3 | 7 | 4 | ▨ | ▨ |
| | | 62.0 | 12 | 12 | 8 | 3 | 4 | 8 | 9 | 6 | ▨ | 3 | 5 | 8 | 5 | ▨ | ▨ | ▨ | 6 | 4 | ▨ | ▨ |
| | | 72.0 | 11 | 11 | 7 | 3 | 3 | 4 | 8 | 5 | ▨ | ▨ | 3 | 7 | 4 | ▨ | ▨ | ▨ | 6 | 4 | ▨ | ▨ |
| | | 92.0 | 6 | 9 | 6 | ▨ | 3 | ▨ | 6 | 4 | ▨ | ▨ | ▨ | 6 | 4 | ▨ | ▨ | ▨ | 6 | 4 | ▨ | ▨ |
| | | 210.0 | ▨ | 6 | 4 | ▨ | ▨ | ▨ | 6 | 4 | ▨ | ▨ | ▨ | 6 | 4 | ▨ | ▨ | ▨ | 6 | 4 | ▨ | ▨ |

# ANCHOR SCHEDULE

**FASTENER MAXIMUM SPACING (INCHES) REQUIRED FOR VARIOUS DESIGN LOADS AND SPANS**

**MIN. 3/4" EDGE DISTANCE**

| EXISTING STRUCTURE | ANCHOR TYPE | LOAD (W) PSF MAX. (SEE NOTE 1) | SPANS UP TO 5'-8" (SEE NOTE 1) | | | | | SPANS UP TO 8'-0" (SEE NOTE 1) | | | | | SPANS UP TO 9'-0" (SEE NOTE 1) | | | | | SPANS UP TO 13'-1" (SEE NOTE 1) | | | | |
|---|---|---|---|---|---|---|---|---|---|---|---|---|---|---|---|---|---|---|---|---|---|---|
| | | CONNECTION TYPE | 1 | 2 | 3 | 4 | 5 | 1 | 2 | 3 | 4 | 5 | 1 | 2 | 3 | 4 | 5 | 1 | 2 | 3 | 4 | 5 |
| WOOD | 1/4"φ WOOD LAG W/ 1-3/4" MIN. THREAD PENETRATION SHEAR PARALLEL OR PERP. TO WOOD GRAIN | 48.0 | 12 | 12 | 11 | 7 | 12 | 12 | 12 | 8 | 5 | 11 | 12 | 12 | 7 | 4 | 10 | 10 | 12 | 4 | 3 | 7 |
| | | 62.0 | 12 | 12 | 8 | 5 | 12 | 12 | 12 | 6 | 4 | 8 | 12 | 12 | 5 | 3 | 7 | 7 | 12 | 4 | ▨ | 6 |
| | | 72.0 | 12 | 12 | 7 | 5 | 10 | 12 | 12 | 5 | 3 | 7 | 9 | 12 | 4 | 3 | 6 | 7 | 12 | 4 | ▨ | 6 |
| | | 92.0 | 12 | 12 | 5 | 3 | 8 | 7 | 12 | 4 | ▨ | 6 | 7 | 12 | 4 | ▨ | 6 | 7 | 12 | 4 | ▨ | 6 |
| | | 210.0 | 7 | 12 | 4 | ▨ | 6 | 7 | 12 | 4 | ▨ | 6 | 7 | 12 | 4 | ▨ | 6 | 7 | 12 | 4 | ▨ | 6 |

**ANCHOR NOTES:**

1. **SPANS AND LOADS SHOWN HERE ARE FOR DETERMINING ANCHOR SPACING ONLY. ALLOWABLE STORM SHUTTER SPANS FOR SPECIFIC LOADS MUST BE LIMITED TO THOSE SHOWN IN TABLE 1, SHEET 5.**
2. ENTER ANCHOR SCHEDULE BASED ON THE EXISTING STRUCTURE MATERIAL, ANCHOR TYPE AND EDGE DISTANCE. SELECT DESIGN LOAD GREATER THAN OR EQUAL TO NEGATIVE DESIGN LOAD ON SHUTTER AND SELECT SPAN GREATER THAN OR EQUAL TO SHUTTER SPAN.
3. EXISTING STRUCTURE MAY BE CONCRETE, HOLLOW BLOCK OR WOOD FRAMING. REFERENCE ANCHOR SCHEDULE FOR PROPER ANCHOR TYPE BASED ON TYPE OF EXISTING STRUCTURE AND APPROPRIATE CONNECTION TYPE. SEE MOUNTING SECTION DETAILS FOR IDENTIFICATION OF CONNECTION TYPE.
4. ANCHORS SHALL BE INSTALLED IN ACCORDANCE WITH MANUFACTURERS' RECOMMENDATIONS.
5. MINIMUM EMBEDMENT AND EDGE DISTANCE EXCLUDES WALL FINISH OR STUCCO.
6. WHERE EXISTING STRUCTURE IS WOOD FRAMING, WOOD FRAMING CONDITIONS VARY. FIELD VERIFY THAT FASTENERS ARE INTO ADEQUATE WOOD FRAMING MEMBERS, NOT PLYWOOD. FASTENING TO PLYWOOD IS ACCEPTABLE ONLY FOR SIDE CLOSURE PIECES.
7. WHERE LAG SCREWS FASTEN TO NARROW FACE OF STUD FRAMING, FASTENER SHALL BE LOCATED IN CENTER OF NOMINAL 2" x 4" (MIN.) WOOD STUD. 3/4" EDGE DISTANCE IS ACCEPTABLE FOR WOOD FRAMING. WOOD STUD SHALL BE "SOUTHERN PINE" G=0.55 OR GREATER DENSITY. LAG SCREWS SHALL HAVE PHILLIPS PAN HEAD OR HEX HEAD.
8. MACHINE SCREWS SHALL HAVE MINIMUM OF 1/2" ENGAGEMENT OF THREADS IN BASE ANCHOR AND MAY HAVE EITHER A PAN HEAD, TRUSS HEAD, OR WAFER HEAD (SIDEWALK BOLT), U.O.N.
9. ▨ DESIGNATES ANCHOR CONDITIONS WHICH ARE NOT ACCEPTABLE USES.
10. * DESIGNATES ANCHORS WHICH ARE REMOVABLE BY REMOVING MACHINE SCREW, NUT OR WASHERED WINGNUT.
11. FOR BUILD-OUT MOUNT SECTION (D) ANCHOR SPACING SHALL NOT EXCEED 8-1/2" O.C.
12. FOR BUILD-OUT MOUNT SECTION (E) ANCHOR SPACING SHALL NOT EXCEED 6" O.C.

Approved as complying with the Florida Buiding Code
Date 06/17/2002
NOA# 02-0611.06
Miami Dade Product Control Division
By [signature]


KNEZEVICH & ASSOCIATES, INC.
CONSULTING ENGINEERS • PRODUCT TESTING
1260 N. UNIVERSITY DRIVE, SUITE 180 • FORT LAUDERDALE, FL 33322
TEL: (954) 382-2800 • FAX: (954) 382-2989 • FLORIDA COA #3205
WEBSITE: WWW.KNEZEVICH.COM • E-MAIL: KA@KNEZEVICH.COM



COPYRIGHT © 2002 KNEZEVICH & ASSOCIATES, INC.
HT100 LICENSED BY HI-TECH SHUTTER GROUP, INC.


HT100 ACCORDION SHUTTER

SLAS, INC.
13894 S.W. 139th COURT
MIAMI, FLORIDA 33186
tel(305) 225-1393 * fax(305) 225-1322

V.J. KNEZEVICH
PROFESSIONAL ENGINEER
FL License No: PE 0010983
JUN 07 2002

revisions

| no | date | by | description |
|---|---|---|---|
| 2 | 10/10/96 | | COUNTY COMMENTS |
| 3 | 11/26/97 | JWK | REVISE FASTENERS |
| 4 | 01/14/98 | JWK | FASTENER NOTES |
| 5 | 04/30/98 | JWK | SLAT 2/REV.2,4 DESC. |
| 6 | 06/10/99 | VJK | CENTER MATES/FASTENERS |
| 7 | 04/02/02 | VJK | FBC2001 GENERAL NOTES |
| 8 | 05/10/02 | WAS | GENERAL NOTES |

HTSG I.D. # 05100296168D

date 07/23/1996
scale AS NOTED
drawn by MCR
design by VJK
checked by VJK
drawing no. 00-849



Print Information: \\hurricane\ka\CADD\Associations\Hi-Tech\Slas\00-849\R8-sub\00-849-06.dwg MCantu 06/07/2002 11:16:59am
06/07/02 11:05