MIAMI-DADE

BUILDING CODE COMPLIANCE OFFICE (BCCO)
PRODUCT CONTROL DIVISION

MIAMI-DADE COUNTY, FLORIDA
METRO-DADE FLAGLER BUILDING
140 WEST FLAGLER STREET, SUITE 1603
MIAMI, FLORIDA 33130-1563
(305) 375-2901 FAX (305) 375-2908

NOTICE OF ACCEPTANCE (NOA)

Kolbe & Kolbe Millwork Co., Inc.
1323 South 11th Ave.
Wausau, WI 54401

SCOPE:

This NOA is being issued under the applicable rules and regulations governing the use of construction materials. The documentation submitted has been reviewed by Miami-Dade County Product Control Division and accepted by the Board of Rules and Appeals (BORA) to be used in Miami Dade County and other areas where allowed by the Authority Having Jurisdiction (AHJ).

This NOA shall not be valid after the expiration date stated below. The Miami-Dade County Product Control Division (In Miami Dade County) and/or the AHJ (in areas other than Miami Dade County) reserve the right to have this product or material tested for quality assurance purposes. If this product or material fails to perform in the accepted manner, the manufacturer will incur the expense of such testing and the AHJ may immediately revoke, modify, or suspend the use of such product or material within their jurisdiction. BORA reserves the right to revoke this acceptance, if it is determined by Miami-Dade County Product Control Division that this product or material fails to meet the requirements of the applicable building code.

This product is approved as described herein, and has been designed to comply with the High Velocity Hurricane Zone of the Florida Building Code.

DESCRIPTION: Series "Ultra Manor" Transom Aluminum Clad Wood Fixed Window

APPROVAL DOCUMENT: Drawing No. **1058**, titled "Ultra Series Manor Door Transom Non-Impact Window", sheets 1 through 4 of 4, dated 9/17/01, prepared by W. W. Schaefer Engineering & Consulting, P.A., signed and sealed by Warren Schaefer, P.E., bearing the Miami-Dade County Product Control Approval stamp with the Notice of Acceptance number and approval date by the Miami-Dade County Product Control Division.

MISSILE IMPACT RATING: None

LABELING: Each unit shall bear a permanent label with the manufacturer's name or logo, city, state and following statement: "Miami-Dade County Product Control Approved", unless otherwise noted herein.

RENEWAL of this NOA shall be considered after a renewal application has been filed and there has been no change in the applicable building code negatively affecting the performance of this product.

TERMINATION of this NOA will occur after the expiration date or if there has been a revision or change in the materials, use, and/or manufacture of the product or process. Misuse of this NOA as an endorsement of any product, for sales, advertising or any other purposes shall automatically terminate this NOA. Failure to comply with any section of this NOA shall be cause for termination and removal of NOA.

ADVERTISEMENT: The NOA number preceded by the words Miami-Dade County, Florida, and followed by the expiration date may be displayed in advertising literature. If any portion of the NOA is displayed, then it shall be done in its entirety.

INSPECTION: A copy of this entire NOA shall be provided to the user by the manufacturer or its distributors and shall be available for inspection at the job site at the request of the Building Official.
This NOA consists of this page 1 as well as approval document mentioned above.
The submitted documentation was reviewed by **Manuel Perez, P.E.**

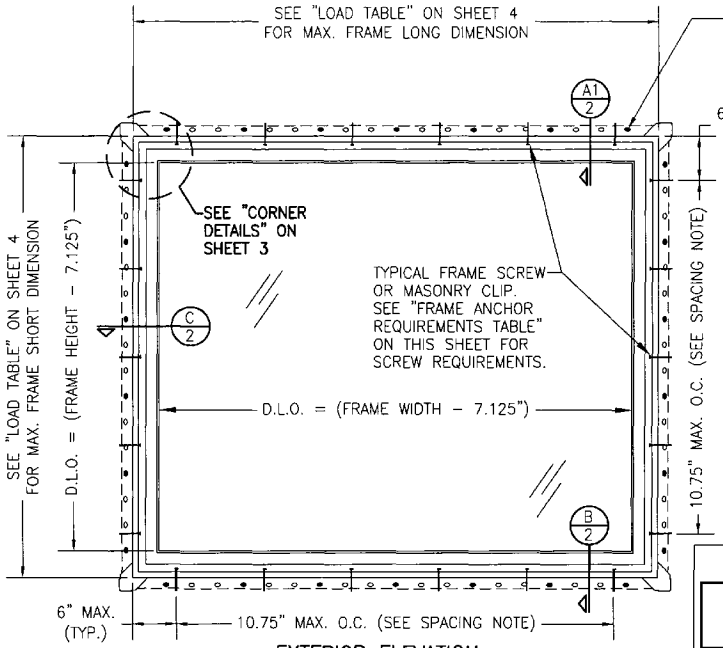

EXTERIOR ELEVATION
RECTANGULAR WINDOW
SCALE: 3/4"=1'-0"

FASTENER SPACING NOTE:
WHEN SMALLER FRAME DIMENSION OF WINDOW IS 54" OR LESS, FASTENER SPACING MAY BE INCREASED TO 12" O.C. MAX.

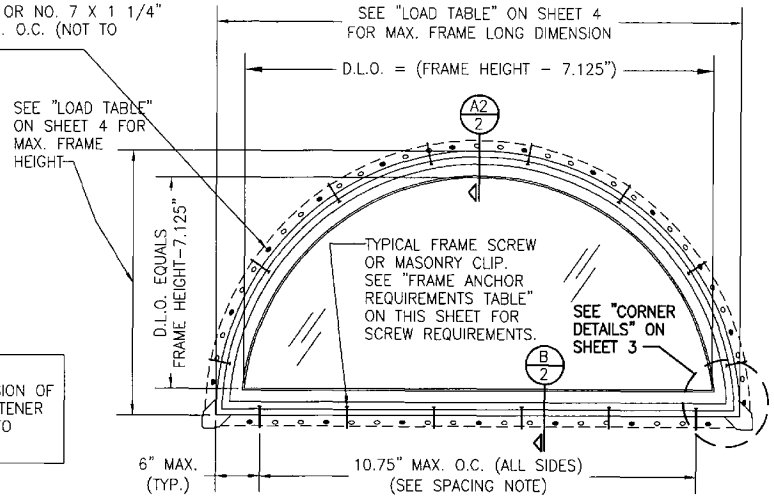

EXTERIOR ELEVATION
HALF ROUND WINDOW
(OTHER RADIUS/CURVE SHAPES SIMILAR)
SCALE: 3/4"=1'-0"

APPROVED SHAPES

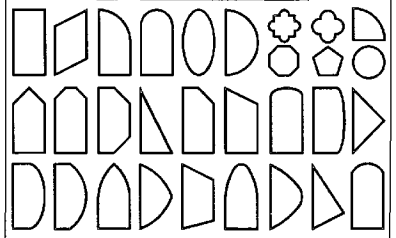

NOTES:
1. OTHER SHAPES MAY APPLY PROVIDING THEY ARE SIMILAR TO THOSE SHOWN & HAVE CORNER CONSTRUCTION PER CORNER DETAILS.
2. ALL SHAPED UNITS MUST FIT INSCRIBED INTO THE ALLOWABLE RECTANGULAR UNITS & BE GOVERNED BY THE ALLOWABLE PRESSURE OF THE RESPECTIVE RECTANGULAR UNIT.

GENERAL NOTES

1. THESE WINDOW SYSTEMS HAVE BEEN TESTED, ANALYZED AND APPROVED FOR DESIGN PRESSURES NOT TO EXCEED THOSE SHOWN IN THE "ALLOWABLE DESIGN LOADS" TABLE.
2. BUCKING, OPENINGS & BUCKING FASTENERS MUST BE PROPERLY DESIGNED & INSTALLED TO TRANSFER WIND LOADS TO THE STRUCTURE.
3. ALL HARDWARE & FASTENERS SHALL BE IN ACCORDANCE WITH THESE DRAWINGS & MAY NOT VARY UNLESS SPECIFICALLY MENTIONED ON THE DRAWINGS.
4. THE DETAILS & SPECIFICATIONS SHOWN HEREIN REPRESENT THE PRODUCTS TESTED & PROPOSED FOR WATER, AIR, FORCED ENTRY & UNIFORM STATIC AIR PRESSURE TESTING IN CONFORMANCE WITH DADE COUNTY PROTOCOL PA 202.
5. THESE WINDOW SYSTEMS HAVE BEEN DESIGNED IN ACCORDANCE WITH THE FLORIDA BUILDING CODE (F.B.C.).
6. THESE WINDOWS ARE NON-IMPACT RATED WINDOWS AND MUST BE SHUTTERED WHERE REQUIRED BY CODE.
7. ALL ANCHORS SHALL BE INSTALLED AS SPECIFIED ON THESE DRAWINGS. SPECIFIED EMBEDMENT TO BASE MATERIAL SHALL BE BEYOND WALL FINISH OR STUCCO.

ALLOWABLE DESIGN LOADS
SEE LOAD TABLE ON SHEET 4

* FRAME ANCHOR REQUIREMENTS TABLE			
OPENING TYPE (SUBSTRATE)	JAMB TO OPENING FASTENER TYPE	MINIMUM EMBEDMENT	MINIMUM EDGE DIST.
2X_ WOOD FRAME OR BUCK	NO. 10 SMS SCREW	1 3/8"	1"
CMU/CONCRETE	(1)3/16" CONCRETE SCREWS	1 1/4"	2"
(1)CONCRETE SCREWS SHALL BE ITW RAMSET/RED HEAD TAPCONS, HILTI KWIK-CON II OR POWERS RAWL TAPPER (HARDENED STEEL OR S.S.).			

* ANCHOR NOTE: FRAME MAY BE EITHER DIRECT MOUNTED TO THE OPENING, MOUNTED ONTO A CONTINUOUS WOOD SPACER, OR ANCHORED TO A MIN. 2X4 NO. 3 SOUTHERN PINE WOOD BUCK. WHEN ANCHORED TO A 2X4 BUCK, NO. 10 SCREWS SHALL BE USED. WHEN DIRECT MOUNTED OR MOUNTED WITH SPACER, 3/16" CONCRETE SCREWS SHALL BE USED. SEE "ANCHOR REQUIREMENTS TABLE" FOR EMBED REQUIREMENTS. PROPER MATERIAL SHALL BE USED BETWEEN ALL DISIMILAR MATERIALS (BLOCK/CONCRETE & ALUMINUM).

Approved as complying with the Florida Buiding Code
Date OCTOBER 24, 2002
NOA# 02-0617.04
Miami Dade Product Control Division
By Manuel Perez

DRAWN BY: W.W.S.	CHECKED BY: W.W.S.
PLOT: 1=16	DATE: 09/17/01

NO.	REVISION DESCRIPTION	BY	DATE

DRAWING TITLE
ULTRA SERIES MANOR DOOR TRANSOM NON-IMPACT WINDOW

MANUFACTURER
KOLBE & KOLBE MILLWORK CO., INC.
1323 SOUTH 11TH AVE.
WAUSAU, WI 54401
715-842-5666

CONSULTANTS
W. W. SCHAEFER ENGINEERING & CONSULTING, P.A.
600 SANDTREE DRIVE, SUITE 203B
PALM BEACH GARDENS, FL. 33403
PHONE: 561-775-4902 FAX: 561-775-4903

CERTIFICATION
OCT 02 2002
WARREN W. SCHAEFER, P.E.
P.E. NO. 44135

DRAWING NO. 1058
REV.
SHEET NO. 1 OF 4

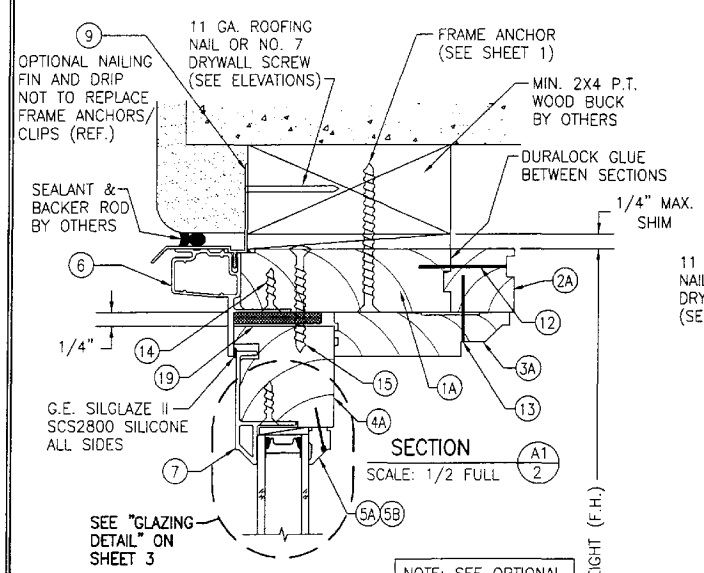

SECTION A1/2
SCALE: 1/2 FULL

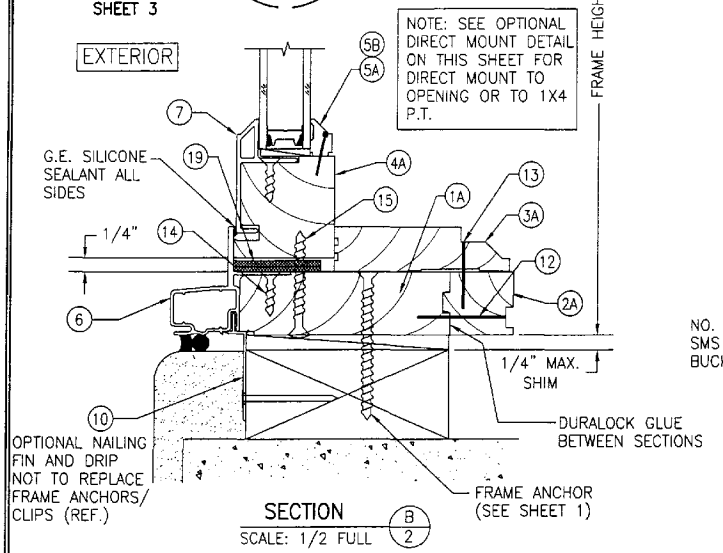

SECTION B/2
SCALE: 1/2 FULL

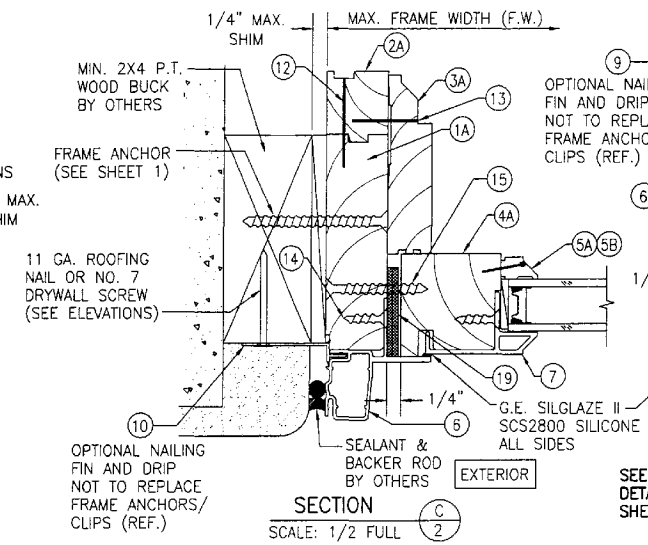

SECTION C/2
SCALE: 1/2 FULL

NOTE: SEE OPTIONAL DIRECT MOUNT DETAIL ON THIS SHEET FOR DIRECT MOUNT TO OPENING OR TO 1X4

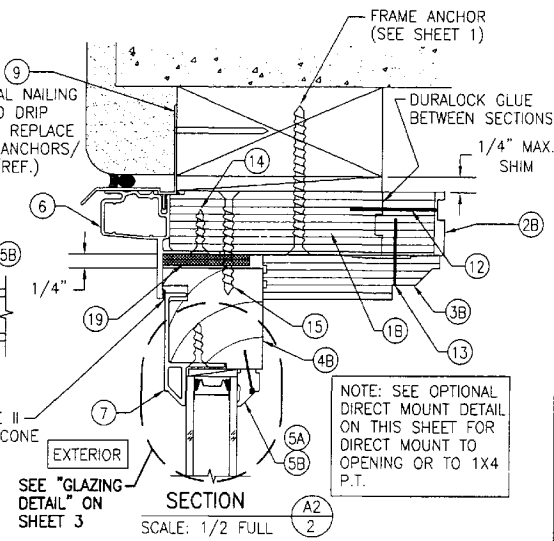

SECTION A2/2
SCALE: 1/2 FULL

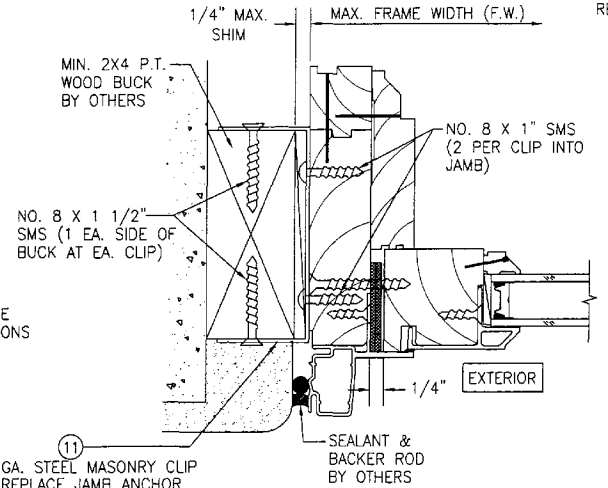

OPTIONAL MASONRY CLIP MOUNT DETAIL
FOR DETAIL NOT SHOWN, SEE OTHER SECTIONS.

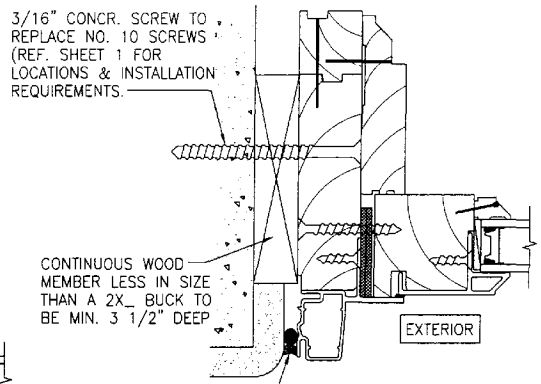

OPTIONAL DIRECT MOUNT DETAIL
FOR DETAIL NOT SHOWN, SEE OTHER SECTIONS.

Approved as complying with the Florida Buiding Code
Date OCTOBER 24, 2002
NOA# 02-0617.04
Miami Dade Product Control Division
By: Manuel Irazq

DRAWN BY: W.W.S.	CHECKED BY: W.W.S.
PLOT: 1=2	DATE: 09/17/01

NO.	REVISION DESCRIPTION	BY	DATE

DRAWING TITLE: ULTRA SERIES MANOR DOOR TRANSOM NON-IMPACT WINDOW

MANUFACTURER: KOLBE & KOLBE MILLWORK CO., INC.
1323 SOUTH 11TH AVE.
WAUSAU, WI 54401
715-842-5666

CONSULTANTS: W. W. SCHAEFER ENGINEERING & CONSULTING, P.A.
600 SANDTREE DRIVE, SUITE 203B
PALM BEACH GARDENS, FL 33403
PHONE: 561-775-4902 FAX: 561-775-4903

CERTIFICATION
OCT 0 2 2002
WARREN W. SCHAEFER, P.E.
P.E. NO. 44135

DRAWING NO. 1058 REV.

SHEET NO. 2 OF 4

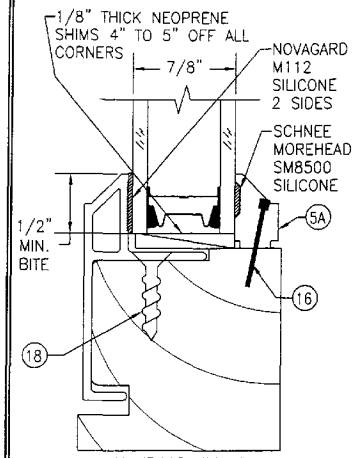

GLAZING DETAIL

7/8" I.G. GLASS WITH 5/32" TEMPERED GLASS PANES AND 9/16" SPACER

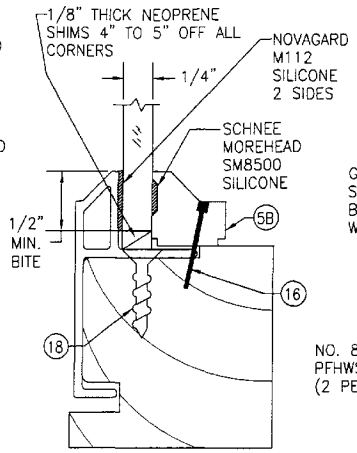

GLAZING DETAIL

1/4" SINGLE PANE TEMPERED GLASS

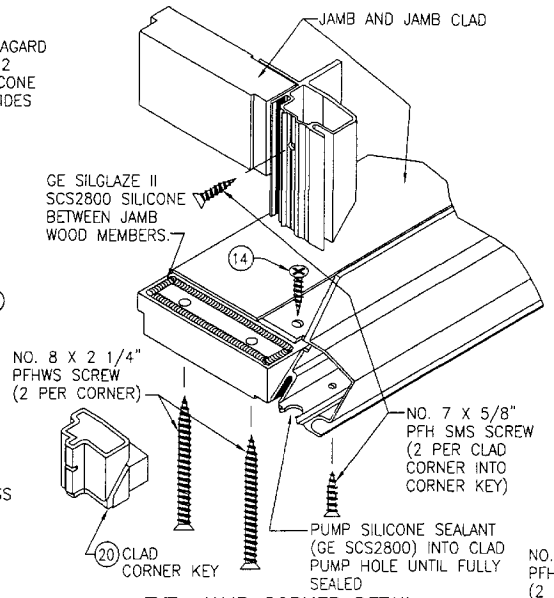

TYP. JAMB CORNER DETAIL

(TYP. AT ALL 90 DEGREE CORNERS)

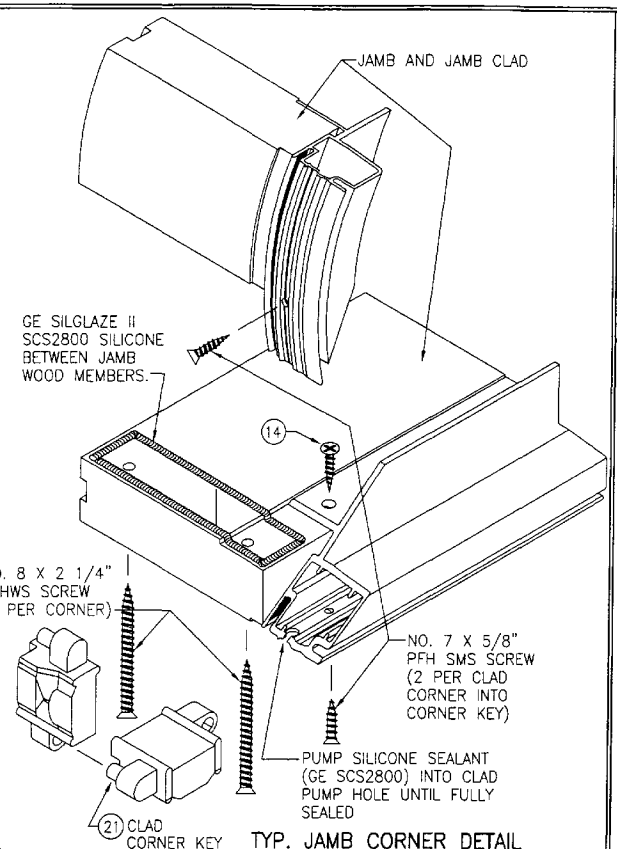

TYP. JAMB CORNER DETAIL

(TYP. AT ALL CORNERS LESS THAN 90 DEGREES)

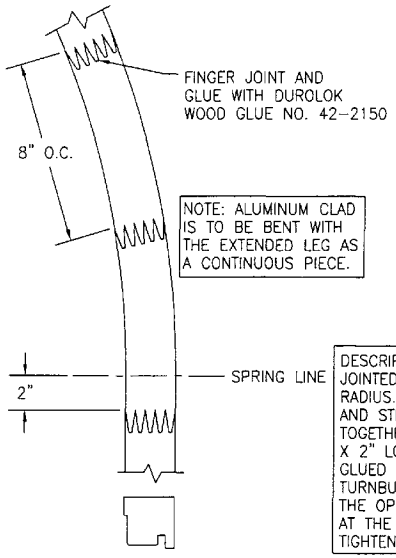

NOTE: ALUMINUM CLAD IS TO BE BENT WITH THE EXTENDED LEG AS A CONTINUOUS PIECE.

TYP. EXTENDED LEG DETAIL AT SASH

DESCRIPTION: EXTENDED LEG IS FINGER JOINTED SIMILAR TO SASH AROUND RADIUS. AT SPRING LINE, THE RADIUS AND STRAIGHT MEMBERS ARE BUTTED TOGETHER, DOWELED WITH TWO 3/8" X 2" LONG WOOD DOWELS AND FULLY GLUED WITH PVA GLUE. A STEEL TURNBUCKLE IS ALSO ROUTED INTO THE OPENING SIDE OF THE JAMBS AT THE SPRINGLINE AND USED TO TIGHTEN DOWN THE JOINT.

TYP. EXTENDED LEG AT JAMB

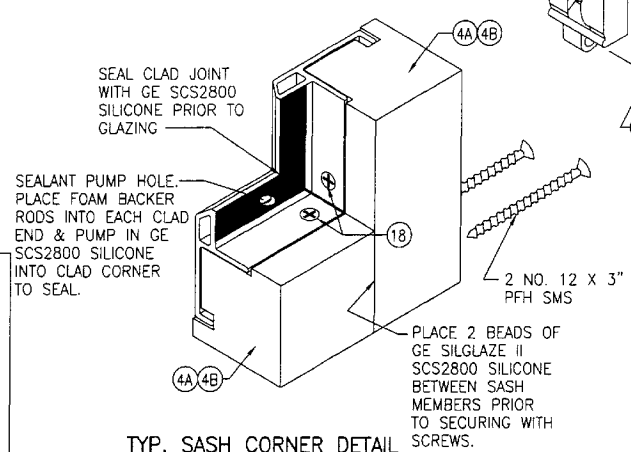

TYP. SASH CORNER DETAIL

(TYP. AT ALL CORNERS 90 DEGREES & LESS)

NOTE: AT CORNERS LESS THAN 90 DEGREES, THE WOOD CORNER JOINT IS PARALLEL TO THE STRAIGHT MEMBER AND THE SCREWS RUN THROUGH THE STRAIGHT SASH INTO THE BENT/RADIUS SASH.

Approved as complying with the Florida Buiding Code
Date OCTOBER 24, 2002
NOA# 02-0617.04
Miami Dade Product Control Division
By [signature]

DRAWN BY: W.W.S.	CHECKED BY: W.W.S.
PLOT: 1=2	DATE: 09/17/01

NO.	REVISION DESCRIPTION	BY	DATE

DRAWING TITLE: ULTRA SERIES MANOR DOOR TRANSOM NON-IMPACT WINDOW

MANUFACTURER: KOLBE & KOLBE MILLWORK CO., INC.
1323 SOUTH 11TH AVE.
WAUSAU, WI 54401
715-842-5666

CONSULTANTS: W. W. SCHAEFER ENGINEERING & CONSULTING, P.A.
600 SANDTREE DRIVE; SUITE 203B
PALM BEACH GARDENS, FL 33403
PHONE: 561-775-4902 FAX: 561-775-4903

CERTIFICATION
OCT 02 2002
WARREN W. SCHAEFER, P.E.
P.E. NO. 44135

DRAWING NO. 1058 | REV.

SHEET NO. 3 OF 4

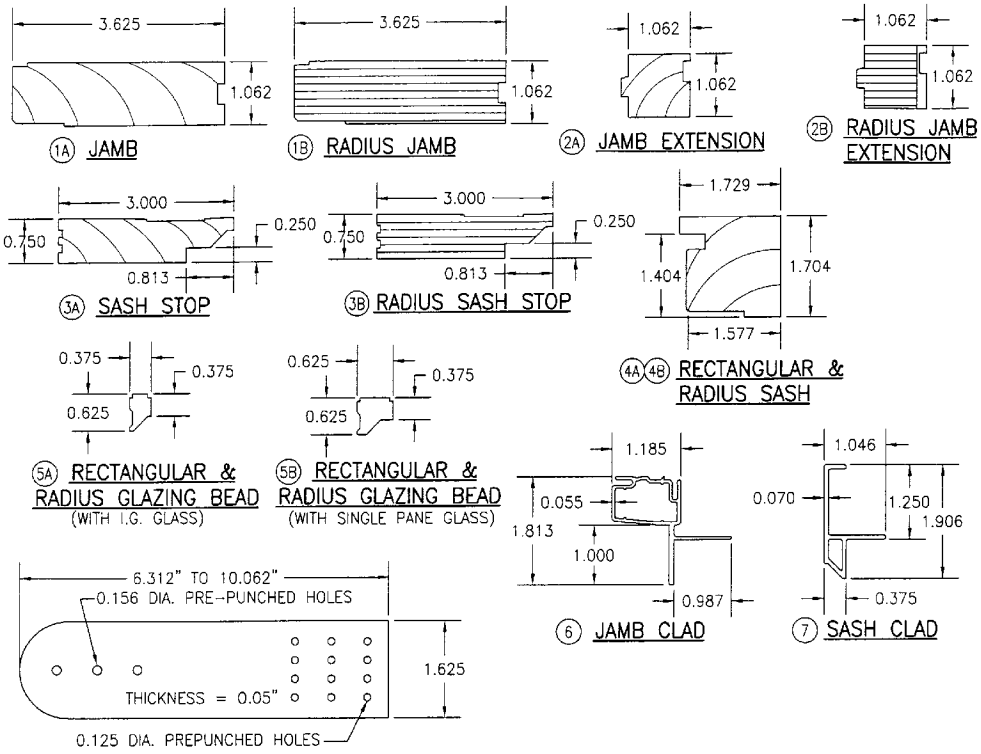

PRE-PUNCHED HOLES ARE ADDED FOR CLIPS LONGER THAN 6.3".

ITEM #	PART	ITEM DESCRIPTION	MANUFACTURER/NOTES
		PARTS	
1A	2917	FRAME HEAD, SIDE & SILL JAMB	* WOOD
1B	2917	FRAME RADIUS JAMB	LVL
2A	4824	JAMB EXTENSION	* WOOD
2B	4824	RADIUS JAMB EXTENSION	LVL
3A	4804	SASH STOP	* WOOD
3B	4804	RADIUS SASH STOP	LVL
4A	1873	SASH	* WOOD
4B	1873	RADIUS SASH	* FINGER JOINTED WOOD
5A	1006	GLAZING BEAD	* WOOD
5B	1008	GLAZING BEAD	* WOOD
6	BU811	JAMB CLAD	6063-T5 ALUMINUM
7	BU106	SASH CLAD	6063-T5 ALUMINUM
9	B5807	OPTIONAL HEAD JAMB NAILING FIN/DRIP	RIGID PVC
10	B5001	OPTIONAL SIDE & SILL JAMB NAILING FIN	RIGID PVC
11	BHDMS	1 5/8" WIDE X 0.05" THK. X MIN. 6 5/16" LONG MASONARY CLIP	ASTM A653 MIN. 33 KSI GALV. STEEL
		MISCELLANEOUS FASTENERS	
12	–	16 GA. 1/2" X 1.5" LG. CROWN STAPLE	2" FROM ENDS & 8" O.C.
13	–	18 GA. X 3/16" X 1 1/8" CROWN STAPLE	2" FROM ENDS & 8" O.C.
14	–	#7 X 3/4" PFH SMS 18-8SS SCREW	2" FROM ENDS & 8" O.C.
15	–	#8 X 2 1/4" POH SCREW	2" FROM ENDS & 8" O.C.
16	–	3/4" BRAD NAIL	2" FROM ENDS & 8" O.C.
18	–	#7 X 3/4" PFH SMS 18-8SS SCREW	2" FROM ENDS & 8" O.C.
		MISCELLANEOUS	
19	BFMDR	15/16" X 1.5" X 3/32" RUBBER SHIMS	2" FROM ENDS & 8" O.C.
20	BHDUL	POLYCARBONATE CORNER KEY (90 DEG.)	BY DARTER PLASTICS
21	BHDUD	POLYCARBONATE CORNER KEY (HINGED)	BY DARTER PLASTICS

* WOOD USED WITH TEST UNITS WAS GRADE 2 PONDEROSA PINE. ALTERNATE WOOD SPECIES TO BE APPLICABLE WITH THESE WINDOWS IS MIN. GRADE 2 MAHOGANY, SOUTHERN PINE, OAK, CHERRY, MAPLE, DOUGLAS FIR & CYPRUS.

ALLOWABLE DESIGN PRESSURE

(1) SHORT DIMENSION	DESIGN LOAD CAPACITY (POSITIVE & NEGATIVE PSF)														
30"	113.5	113.5	113.5	113.5	108.0	104.0	100.9	98.5	97.5	95.0	92.4	90.3	81.3	73.9	* 67.7
36"	X	108.3	108.3	104.0	97.5	92.9	89.4	86.7	85.5	82.7	80.0	75.2	67.7	X	X
42"	X	X	92.9	92.9	91.2	85.7	81.7	78.7	77.4	74.3	71.3	X	X	X	X
48"	X	X	X	81.3	81.3	81.3	76.6	73.1	71.7	68.3	X	X	X	X	X
54"	X	X	X	X	72.2	72.2	72.2	69.3	67.7	X	X	X	X	X	X
60"	X	X	X	X	X	65.0	65.0	65.0	65.0	X	X	X	X	X	X
66"	X	X	X	X	X	X	59.1	X	X	X	X	X	X	X	X
(1) LONG DIMENSION	30"	36"	42"	48"	54"	60"	66"	72"	75"	84"	96"	108"	120"	132"	144"

TABLE NOTES:

(1) ALL WINDOW DIMENSION VALUES SHOWN ARE +/-1/2" & ARE FRAME (F.H. & F.W.) DIMENSIONS

(2) THOSE SIZES WITH LOADS LISTED ARE MAXIMUM ALLOWABLE SIZES AT THAT LOAD. IF NO LOAD IS LISTED FOR A GIVEN SIZE, THAT SIZE EXCEEDS ALLOWABLE AND IS NOT ACCEPTABLE.

* WINDOW GLASS SIZE DOES NOT MEET ASTM 5:1 GLASS SIZE RATIO. THE ALLOWABLE LOAD SHOWN IS BASED ON A WINDOW OF THE SAME LONG DIMENSION WITH LARGER SHORT DIMENSION MEETING THE 5:1 SIZE RATIO.

Approved as complying with the Florida Building Code
Date OCTOBER 24, 2002
NOA# 02-0617.04
Miami Dade Product Control
By: Manuel Perez

DRAWN BY: W.W.S.	CHECKED BY: W.W.S.
PLOT: 1=2	DATE: 09/17/01

NO.	REVISION DESCRIPTION	BY	DATE

DRAWING TITLE: ULTRA SERIES MANOR DOOR TRANSOM NON-IMPACT WINDOW

MANUFACTURER: KOLBE & KOLBE MILLWORK CO., INC.
1323 SOUTH 11TH AVE.
WAUSAU, WI 54401
715-842-5666

CONSULTANTS: W. W. SCHAEFER ENGINEERING & CONSULTING, P.A.
600 SANDTREE DRIVE, SUITE 203B
PALM BEACH GARDENS, FL 33403
PHONE: 561-775-4902 FAX: 561-775-4903

CERTIFICATION
OCT 02 2002
WARREN W. SCHAEFER, P.E.
P.E. NO. 44135

DRAWING NO. 1058 REV.

SHEET NO. 4 OF 4