MIAMI-DADE

BUILDING CODE COMPLIANCE OFFICE (BCCO)
PRODUCT CONTROL DIVISION

MIAMI-DADE COUNTY, FLORIDA
METRO-DADE FLAGLER BUILDING
140 WEST FLAGLER STREET, SUITE 1603
MIAMI, FLORIDA 33130-1563
(305) 375-2901 FAX (305) 375-2908

NOTICE OF ACCEPTANCE (NOA)

Hurst Awning Company, Inc.
6865 N.W. 36th Avenue
Miami, Florida 33147

SCOPE:

This NOA is being issued under the applicable rules and regulations governing the use of construction materials. The documentation submitted has been reviewed by Miami-Dade County Product Control Division and accepted by the Board of Rules and Appeals (BORA) to be used in Miami Dade County and other areas where allowed by the Authority Having Jurisdiction (AHJ).

This NOA shall not be valid after the expiration date stated below. The Miami-Dade County Product Control Division (In Miami Dade County) and/or the AHJ (in areas other than Miami Dade County) reserve the right to have this product or material tested for quality assurance purposes. If this product or material fails to perform in the accepted manner, the manufacturer will incur the expense of such testing and the AHJ may immediately revoke, modify, or suspend the use of such product or material within their jurisdiction. BORA reserves the right to revoke this acceptance, if it is determined by Miami-Dade County Product Control Division that this product or material fails to meet the requirements of the applicable building code.

This product is approved as described herein, and has been designed to comply with the High Velocity Hurricane Zone of the Florida Building Code.

DESCRIPTION: 0.0312" (min.) Galvanized Steel Storm Panels Shutter

APPROVAL DOCUMENT: Drawing No. 02-267, titled " The 24 Steel Storm Panel Shutter ", sheets 1 through 6 of 6, prepared by Knezevich & Associates, Inc., dated June 25, 2002, last revision #2 dated August 30, 2002, bearing the Miami-Dade County Product Control Approval stamp with the Notice of Acceptance number and approval date by the Miami-Dade County Product Control Division.

MISSILE IMPACT RATING: Large and Small Missile Impact

LABELING: Each panel shall bear a permanent label with the manufacturer's name or logo, city, state and the following statement: "Miami-Dade County Product Control Approved", unless otherwise noted herein.

RENEWAL of this NOA shall be considered after a renewal application has been filed and there has been no change in the applicable building code negatively affecting the performance of this product.

TERMINATION of this NOA will occur after the expiration date or if there has been a revision or change in the materials, use, and/or manufacture of the product or process. Misuse of this NOA as an endorsement of any product, for sales, advertising or any other purposes shall automatically terminate this NOA. Failure to comply with any section of this NOA shall be cause for termination and removal of NOA.

ADVERTISEMENT: The NOA number preceded by the words Miami-Dade County, Florida, and followed by the expiration date may be displayed in advertising literature. If any portion of the NOA is displayed, then it shall be done in its entirety.

INSPECTION: A copy of this entire NOA shall be provided to the user by the manufacturer or its distributors and shall be available for inspection at the job site at the request of the Building Official.

This NOA consists of this page 1 as well as approval document mentioned above.
The submitted documentation was reviewed by **Helmy A. Makar, P.E.**

PRODUCT CONTROL ACCEPTED

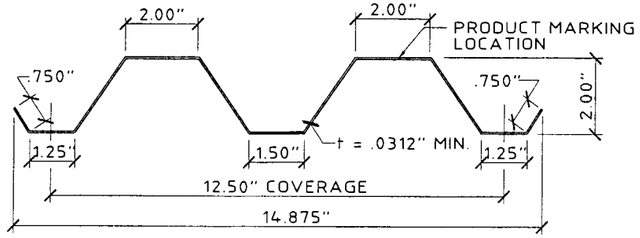

GALVANIZED STEEL STORM PANEL
1 SCALE: 3" = 1' - 0"

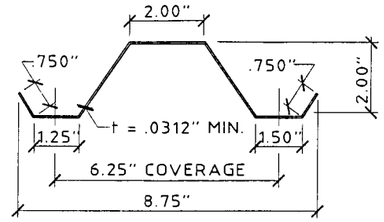

ONE HALF PANEL PER OPENING MAYBE USED AS REQUIRED TO COVER OPENING.

GALVANIZED STEEL HALF STORM PANEL
2 SCALE: 3" = 1' - 0"

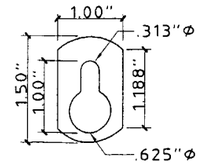

(1/16 GALVANIZED STEEL)
3 KEYHOLE WASHER (OPTIONAL)
SCALE : HALF SIZE

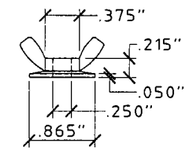

(ZAMAC 3 ALLOY)
4 WASHERED WINGNUT
SCALE : HALF SIZE

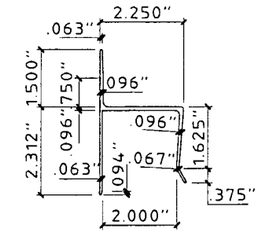

5 "h" HEADER
SCALE: 3" = 1' - 0"

GENERAL NOTES:

1. THESE APPROVAL DOCUMENTS REPRESENT A SHUTTER SYSTEM ANALYZED WITH THE PROVISIONS SET FOR THE ISSUANCE OF A NOTICE OF ACCEPTANCE (NOA) BY MIAMI-DADE COUNTY PRODUCT CONTROL DIVISION FOR THE HIGH VELOCITY HURRICANE ZONE (HVHZ) AND NON-HIGH VELOCITY HURRICANE ZONE SECTIONS OF THE FLORIDA BUILDING CODE.
2. A 33% INCREASE IN ALLOWABLE STRESS HAS NOT BEEN USED IN THE DESIGN OF THIS PRODUCT.
3. DETERMINE THE POSITIVE AND NEGATIVE DESIGN LOADS TO USE WHEN REFERENCING THESE DOCUMENTS IN ACCORDANCE WITH THE GOVERNING CODE AND GOVERNING WIND VELOCITY.
4. THESE APPROVAL DOCUMENTS ARE GENERIC AND DO NOT INCLUDE INFORMATION FOR SITE-SPECIFIC APPLICATION OF THIS SHUTTER SYSTEM.
5. THESE APPROVAL DOCUMENTS COMPLY WITH CHAPTER 61G15-23 OF THE FLORIDA ADMINISTRATIVE CODE.
6. THESE APPROVAL DOCUMENTS ARE SUITABLE TO BE APPLIED BY THE CONTRACTOR PROVIDED THE CONTRACTOR DOES NOT DEVIATE FROM THE CONDITIONS DETAILED HEREIN AND THE CONTRACTOR VERIFIES THAT THE EXISTING STRUCTURE DOES NOT DEVIATE IN EITHER FORM OR MATERIAL FROM THE STRUCTURAL SUBSTRATES DETAILED HEREIN.
7. ANY MODIFICATIONS OR ADDITIONS TO THESE APPROVAL DOCUMENTS WILL VOID THE APPROVAL DOCUMENTS.
8. WHEN THE SITE CONDITIONS DEVIATE FROM THESE APPROVAL DOCUMENTS, THE BUILDING OFFICIAL MAY ELECT ONE OF THE FOLLOWING OPTIONS:
   A) REQUIRE THAT SITE SPECIFIC DOCUMENTS BE PREPARED, SIGNED, DATED AND SEALED BY A LICENSED ENGINEER OR REGISTERED ARCHITECT, WHICH DETAIL AND JUSTIFY THE DEVIATION. SAID DOCUMENTS SHALL BE SUBMITTED TO THE PRODUCT ENGINEER FOR REVIEW AS A CONDITION TO THE BUILDING OFFICIAL GRANTING HIS/HER APPROVAL.
   B) REQUIRE THAT A ONE-TIME SITE SPECIFIC APPROVAL BE APPLIED FOR AND SECURED FROM THE MIAMI-DADE COUNTY PRODUCT CONTROL DIVISION

   WHEN THE SITE CONDITION DEVIATIONS OCCUR WITHIN THE HIGH VELOCITY HURRICANE ZONE AREAS ONLY OPTION "B" SHALL BE ACCEPTED BY THE BUILDING OFFICIAL.
9. PRODUCT MARKINGS SHALL BE WITHIN 12" OF ONE END OF THE PANEL WITH A MIN. OF ONE MARKING PER PANEL, AND SHALL BE LABELED AS FOLLOWS:
   HURST AWNING CO., INC.
   MIAMI , FLORIDA
   MIAMI-DADE COUNTY PRODUCT CONTROL APPROVED
10. STORM PANELS SHALL BE GALVANIZED STEEL CONFORMING TO A.S.T.M. A653, SQ. GRADE 80 G = 90 GALVANIZED COATING AND WITH THE FOLLOWING BARE METAL AND GALVANIZED THICKNESSES, AND MECHANICAL PROPERTIES:
    0.0297" MIN. BARE METAL THICKNESS (B.M.T.), WITH A MIN. Fy= 80.0 KSI
    0.0312" MIN. THICKNESS (AFTER GALVANIZING)
11. ALL EXTRUSIONS SHALL BE 6063-T6 ALUMINUM ALLOY, U.O.N
12. ALL BOLTS AND WASHERS SHALL BE GALVANIZED OR STAINLESS STEEL WITH A MINIMUM TENSILE STRENGTH OF 60 KSI OR APPROVED COATED HARDWARE.
13. TOP & BOTTOM DETAILS SHOWN MAY BE INTERCHANGED AS FIELD CONDITIONS DICTATE. PANELS MAY BE MOUNTED HORIZONTALLY WHERE APPLICABLE, EXCEPT FOR "h" AND "U" HEADER MOUNTING CONDITIONS.

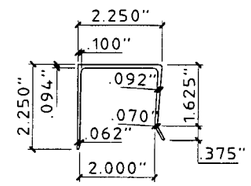

6 "U" HEADER
SCALE: 3" = 1' - 0"

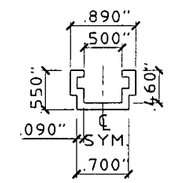

7 C-TRACK
SCALE : HALF SIZE

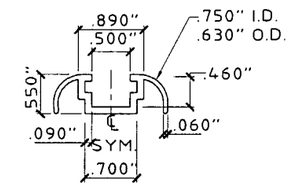

8 C-TRACK (FINISH)
SCALE : HALF SIZE

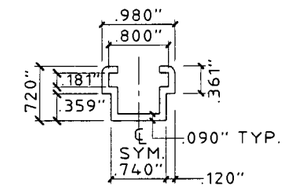

9 SLIDE C-TRACK
SCALE : HALF SIZE

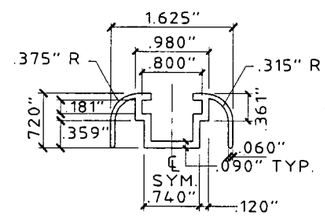

10 SLIDE C-TRACK (FINISH)
SCALE : HALF SIZE

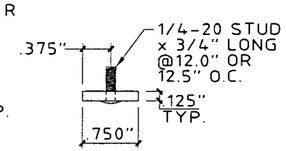

11 STUDDED STRAP (SLIDER)
SCALE : HALF SIZE

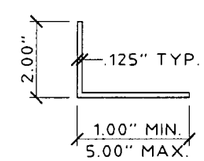

12 ANGLE
SCALE: 3" = 1' - 0"

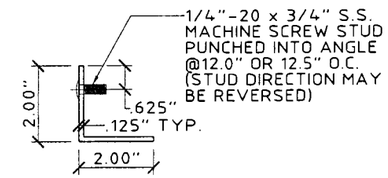

13 STUD ANGLE
SCALE: 3" = 1' - 0"

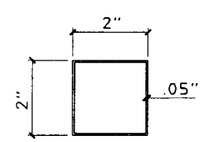

14 2" x 2" x 0.05" TUBE
SCALE : HALF SIZE

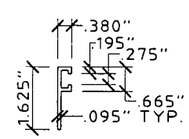

15 F-TRACK
SCALE: 3" = 1' - 0"

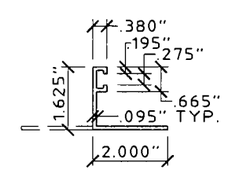

16 E-TRACK
SCALE: 3" = 1' - 0"

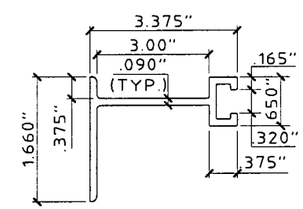

17 BUILD-OUT F-TRACK
SCALE : HALF SIZE

Approved as complying with the Florida Building Code
Date 08/30/2002
NOA# 02-0627.01
Miami Dade Product Control Division
By [signature]

KNEZEVICH & ASSOCIATES, INC.
CONSULTING ENGINEERS • PRODUCT TESTING
1260 N. UNIVERSITY DRIVE, SUITE 180 • FORT LAUDERDALE, FL 33322
TEL: (954) 382-2800 • FAX: (954) 382-2989 • FLORIDA COA # 3205
WEBSITE: WWW.KNEZEVICH.COM • E-MAIL: KA@KNEZEVICH.COM

COPYRIGHT © 2002 KNEZEVICH & ASSOCIATES, INC.

THE 24 STEEL STORM PANEL SHUTTER

HURST AWNING COMPANY, INC. QUALITY SERVICE SINCE 1957
Manufacturers of Hurricane & Security Protection Products
6865 N.W. 36th Avenue
Miami, Florida 33147
Phone: (305) 635-0900
Toll Free: (800) 327-0905
Fax: (305) 634-9078

V.J. KNEZEVICH
PROFESSIONAL ENGINEER
FL License No: PE 0010983

AUG 30 2002

revisions			
no	date	by	description
1	08/08/02	MAS	GENERAL REVISION
2	08/30/02	MAS	GENERAL REVISION

date 06/25/2002
scale AS NOTED | drawn by MCR
design by JAP | checked by VJK
drawing no. 02-267
sheet 1 of 6

Print Information: J:\CADD\Cadd02\HurstAwningCo\02-267\R2-prg\02-267-01.dwg AVazquez 08/30/2002 12:38:16pm

08/30/02 12:38

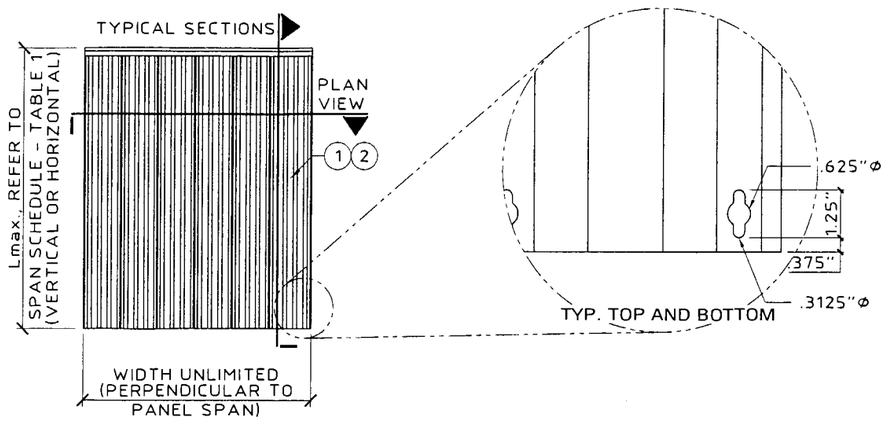

A PANEL ELEVATION
SCALE: 1/4" = 1' - 0"

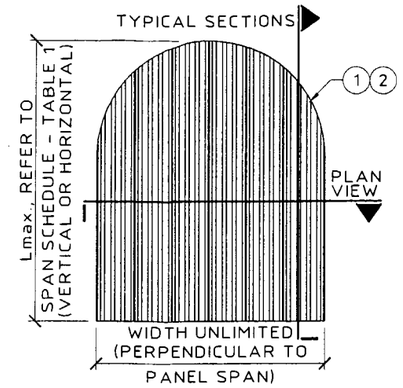

NOTE: FOR DIRECT MOUNT APPLICATION ONLY.

B ROUND PANEL ELEVATION
SCALE: 1/4" = 1' - 0"

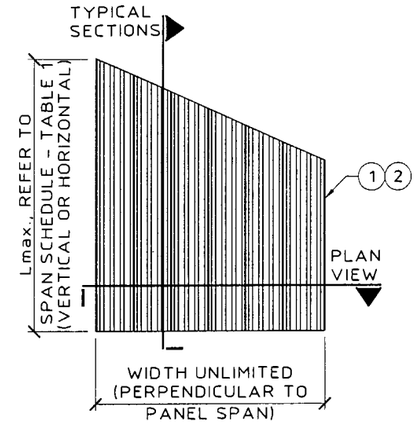

C MITER PANEL ELEVATION
SCALE: 1/4" = 1' - 0"

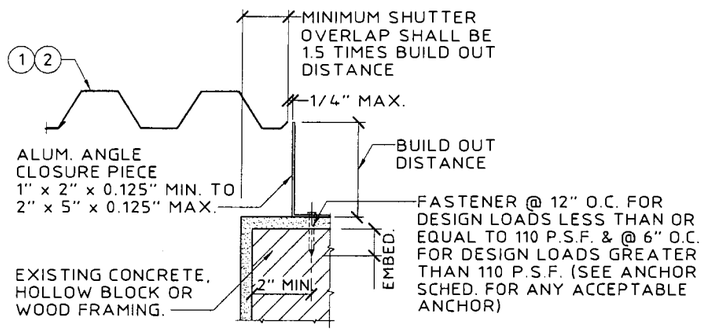

D BUILD-OUT MOUNT CLOSURE DETAIL
SCALE: 1-1/2" = 1' - 0"

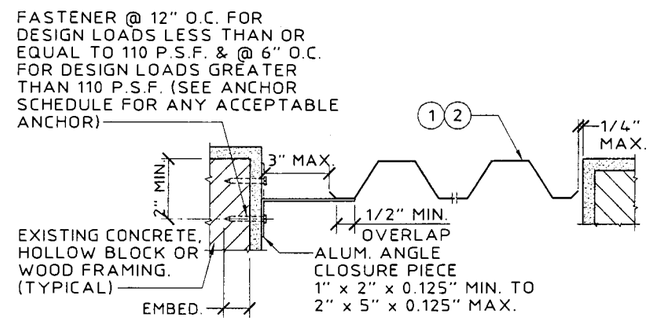

E TRAP MOUNT CLOSURE DETAIL
SCALE: 1-1/2" = 1' - 0"

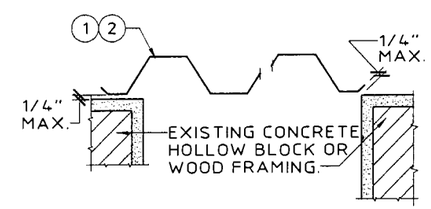

F WALL MOUNT CLOSURE DETAIL
SCALE: 1-1/2" = 1' - 0"

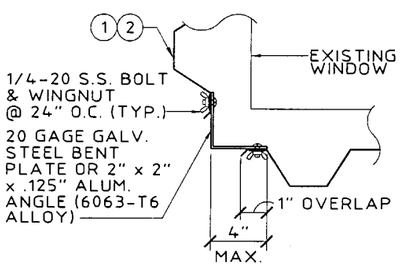

G CORNER CLOSURE DETAIL
SCALE: 1-1/2" = 1' - 0"

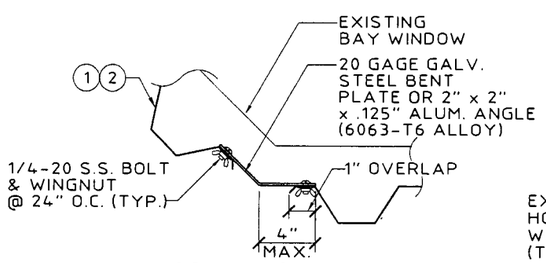

H CORNER CLOSURE DETAIL
SCALE: 1-1/2" = 1' - 0"

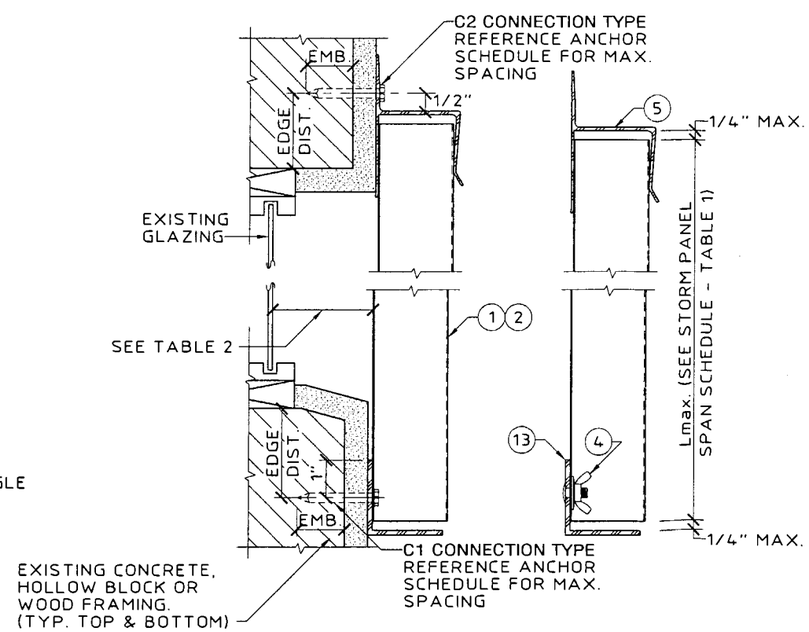

J WALL MOUNT SECTION
SCALE: 3" = 1' - 0"

Approved as complying with the Florida Building Code
Date 08/30/2002
NOA# 02-0627.01
Miami Dade Product Control Division
By

KNEZEVICH & ASSOCIATES, INC.
CONSULTING ENGINEERS • PRODUCT TESTING
1260 N. UNIVERSITY DRIVE, SUITE 180 • FORT LAUDERDALE, FL 33322
TEL: (954) 382-2800 • FAX: (954) 382-2989 • FLORIDA COA #3205
WEBSITE: WWW.KNEZEVICH.COM • E-MAIL: KA@KNEZEVICH.COM

COPYRIGHT © 2002 KNEZEVICH & ASSOCIATES, INC.

THE 24 STEEL STORM PANEL SHUTTER

Manufacturers of Hurricane & Security Protection Products
HURST AWNING COMPANY, INC.
"QUALITY SERVICE SINCE 1957"
6865 N.W. 36th Avenue
Miami, Florida 33147
Phone: (305) 635-0900
Toll Free: (800) 327-0905
Fax: (305) 634-9078

V.J. KNEZEVICH
PROFESSIONAL ENGINEER
FL License No: PE 0010983

AUG 30 2002

revisions

no	date	by	description
1	08/08/02	WAS	GENERAL REVISION
2	08/30/02	WAS	GENERAL REVISION

date 06/25/2002
scale AS NOTED
drawn by MCR
design by JAP
checked by VJK
drawing no. 02-267
sheet 2 of 6

Print Information: J:\CADD\Cadd02\HurstAwningCo\02-267\R2-prg\02-267-02.dwg AVazquez 08/30/2002 12:40:31pm
08/30/02 12:40

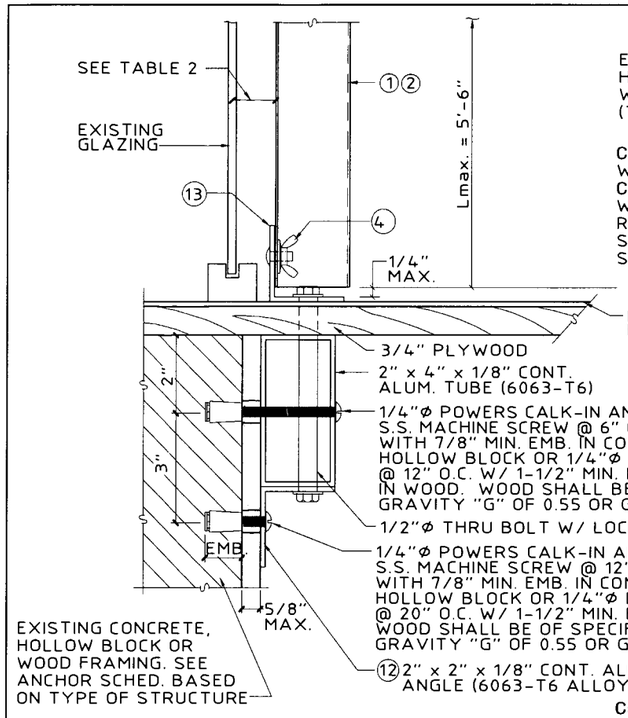

(K) "PASS THRU" DETAIL
SCALE: 3" = 1' - 0"

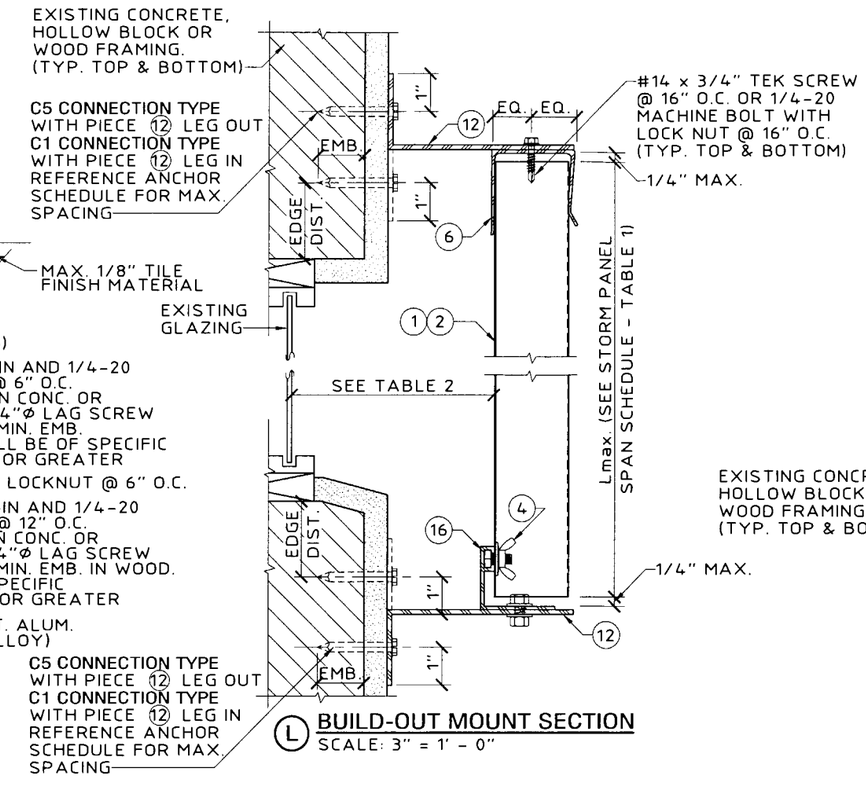

(L) BUILD-OUT MOUNT SECTION
SCALE: 3" = 1' - 0"

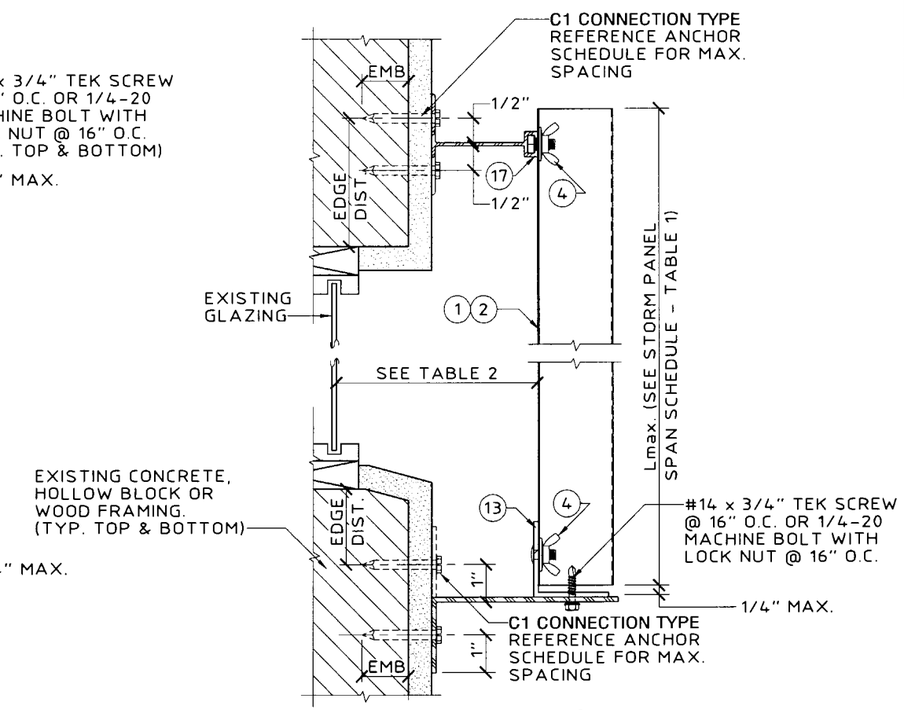

(M) BUILD-OUT MOUNT SECTION
SCALE: 3" = 1' - 0"

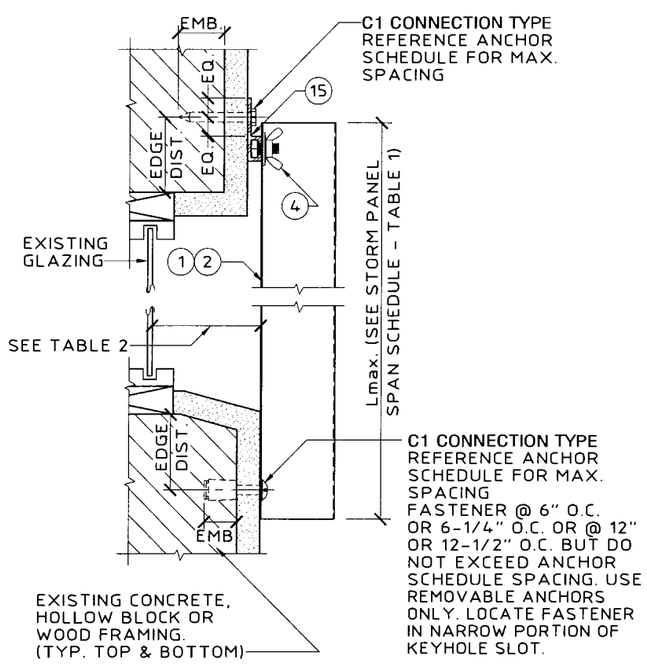

(N) "F" TRACK/DIRECT MOUNT SECTION
SCALE: 3" = 1' - 0"

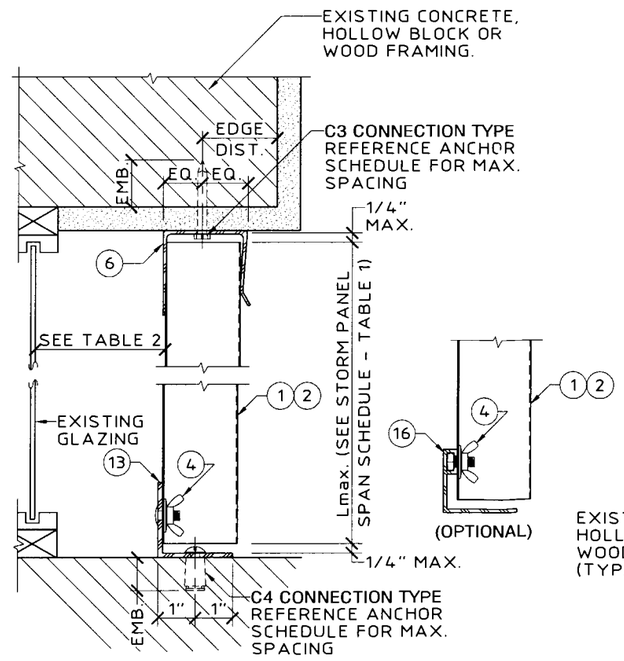

(P) CEILING / FLOOR MOUNT SECTION
SCALE: 3" = 1' - 0"

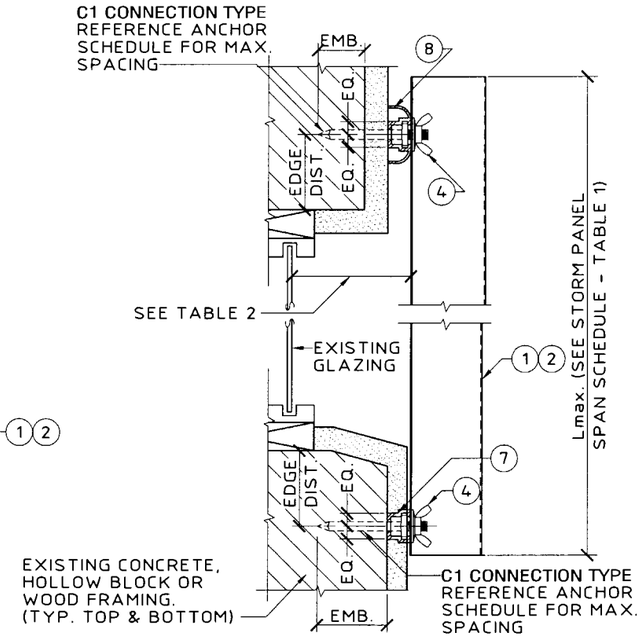

(Q) FINISH TRACK / PRE-STUCCO TRACK
SCALE: 3" = 1' - 0"

Approved as complying with the Florida Buiding Code
Date 08/30/2002
NOA# 02-0627.01
Miami Dade Product Control Division
By Helmy A. Hakim

KNEZEVICH & ASSOCIATES, INC.
CONSULTING ENGINEERS • PRODUCT TESTING
1260 N. UNIVERSITY DRIVE, SUITE 180 • FORT LAUDERDALE, FL 33322
TEL: (954) 382-2800 • FAX: (954) 382-2989 • FLORIDA COA #3205
WEBSITE: WWW.KNEZEVICH.COM • E-MAIL: KA@KNEZEVICH.COM

COPYRIGHT © 2002 KNEZEVICH & ASSOCIATES, INC.

THE 24 STEEL STORM PANEL SHUTTER

Manufacturers of Hurricane & Security Protection Products

HURST AWNING COMPANY, INC.
QUALITY SERVICE SINCE 1957
6865 N.W. 36th Avenue
Miami, Florida 33147
Phone: (305) 635-0900
Toll Free: (800) 327-0905
Fax: (305) 634-9078

V.J. KNEZEVICH
PROFESSIONAL ENGINEER
Fl. License No: PE 0010983

AUG 30 2002

revisions			
no	date	by	description
1	08/08/02	MAS	GENERAL REVISION
2	08/30/02	MAS	GENERAL REVISION

date 06/25/2002
scale AS NOTED
drawn by MCR
design by JAP
checked by VJK
drawing no. 02-267
sheet 3 of 6

Print Information: J:\CADD\Cadd02\HurstAwningCo\02-267\R2-prg\02-267-03.dwg AVazquez 08/30/2002 02:11:26pm
08/30/02 12:44

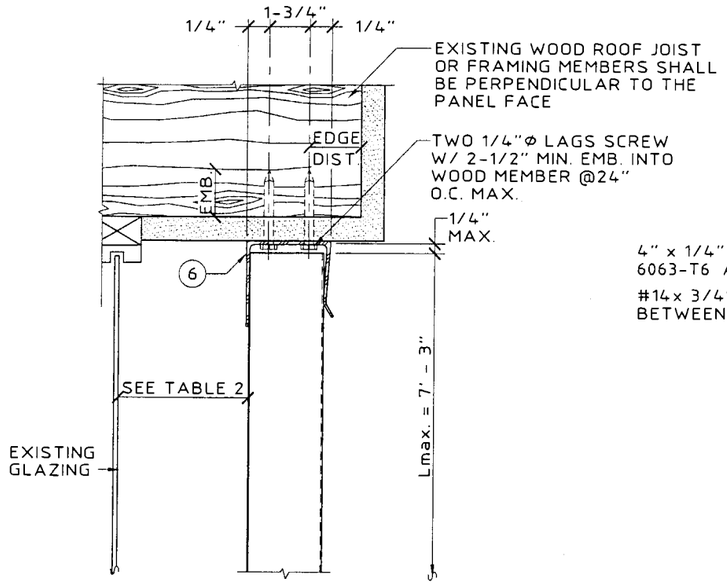

MAX. DESIGN LOAD = ± 47.9 P.S.F.

(R) CEILING MOUNT SECTION
SCALE: 3" = 1' - 0"

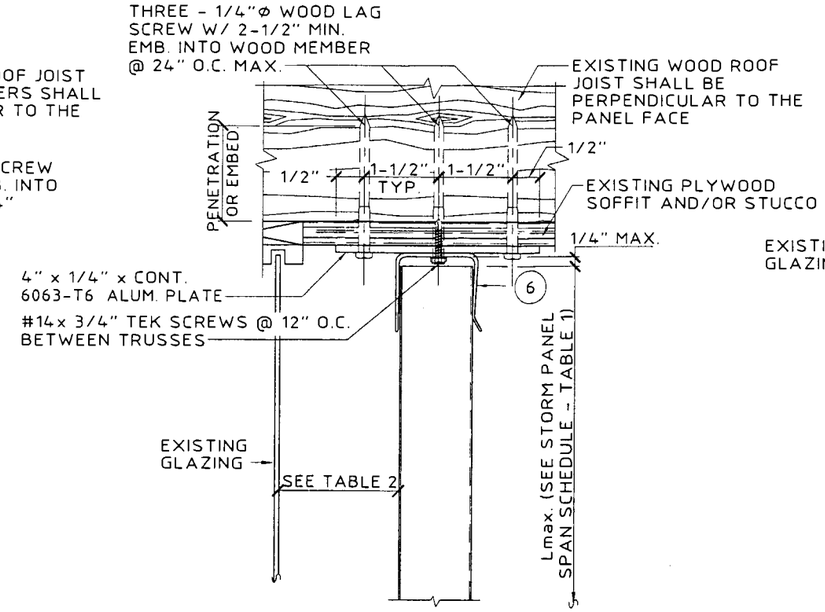

(S) CEILING/FLOOR MOUNT SECTION
SCALE : 3" = 1'-0"

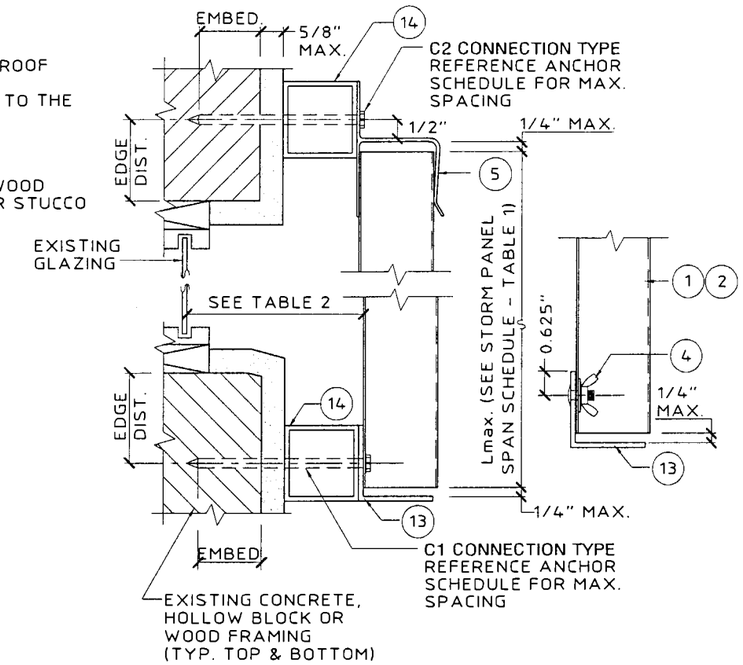

(U) WALL MOUNT SECTION
SCALE : 3" = 1'-0"

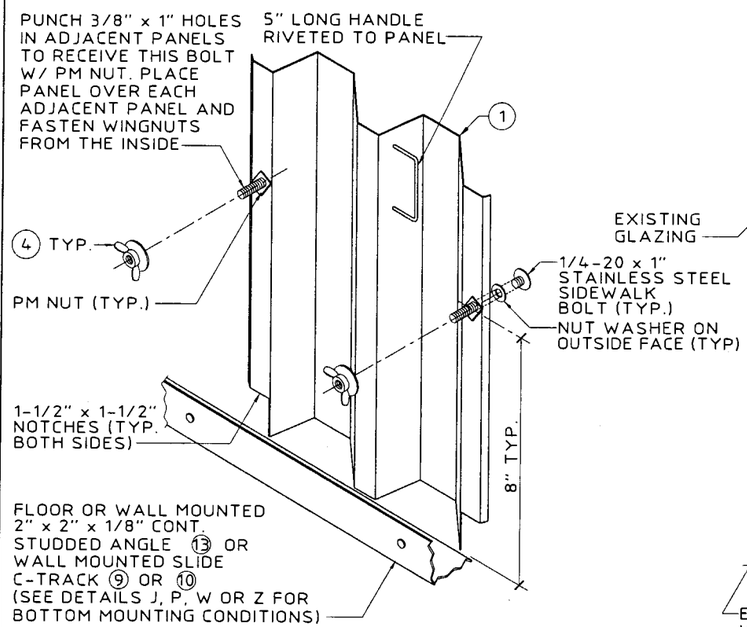

DETAIL V NOTE:

THIS DETAIL DEPICTS THE CONNECTION OF THE LAST PANEL FOR AN OPENING WITH PANELS INSTALLED FROM INSIDE. REFERENCE DETAILS J, P, R OR S FOR TOP MOUNTING CONDITIONS.

MAX. PANEL HEIGHT = 8' - 8"
AND MAX. DESIGN LOAD = ± 72.00 P.S.F.

(V) OPTIONAL INTERIOR FASTENING DETAIL (ISOMETRIC)
N.T.S.

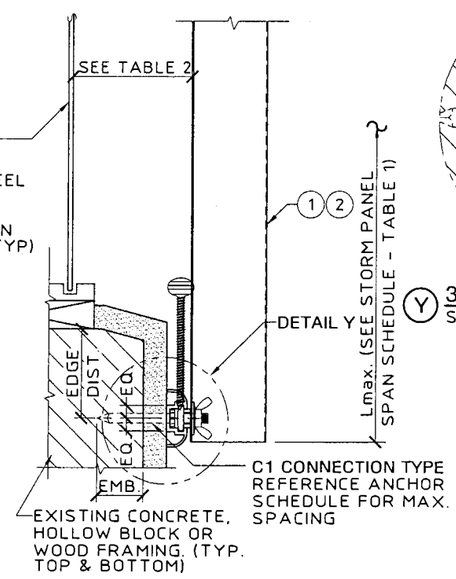

NOTE: USE OF DETAIL SHALL BE IN CONJUNCTION WITH AN " h " HEADER OR " U " HEADER TOP MOUNT

(W) SLIDE TRACK ASSEMBLY - INSIDE MOUNT
SCALE: 3" = 1' - 0"

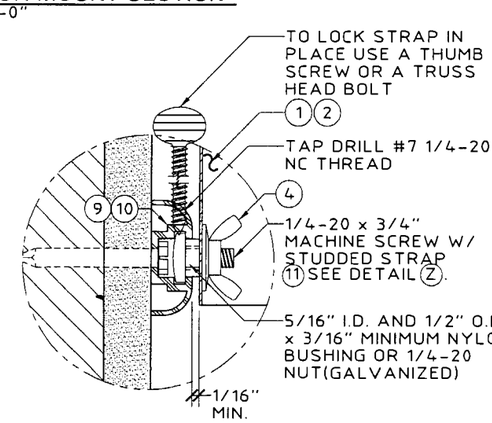

(Y) 3/4" SLIDE TRACK ASSEMBLY (BLOW UP)
SCALE: HALF SIZE

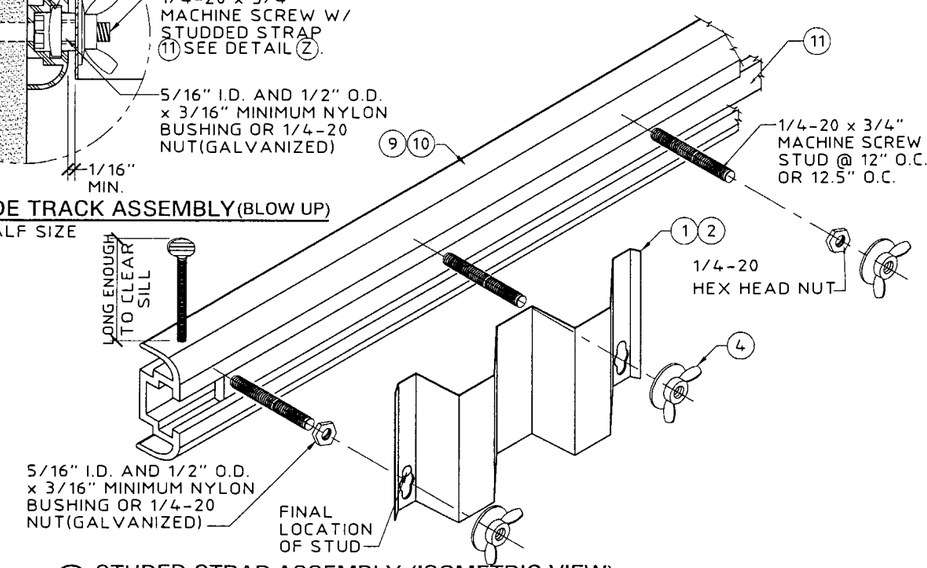

(Z) STUDED STRAP ASSEMBLY (ISOMETRIC VIEW)
SCALE: 3" = 1' - 0"

Approved as complying with the Florida Building Code
Date 08/30/2002
NOA# 02-0627.01
Miami Dade Product Control Division
By Helena A. Helen

KNEZEVICH & ASSOCIATES, INC.
CONSULTING ENGINEERS • PRODUCT TESTING
1260 N. UNIVERSITY DRIVE, SUITE 180 • FORT LAUDERDALE, FL 33322
TEL: (954) 382-2800 • FAX: (954) 382-2989 • FLORIDA COA #3205
WEBSITE: WWW.KNEZEVICH.COM • E-MAIL: KA@KNEZEVICH.COM

COPYRIGHT © 2002 KNEZEVICH & ASSOCIATES, INC

THE 24 STEEL STORM PANEL SHUTTER

HURST AWNING COMPANY, INC. QUALITY SERVICE SINCE 1937
Manufacturers of Hurricane & Security Protection Products
6865 N.W. 36th Avenue
Miami, Florida 33147
Phone: (305) 635-0900
Toll Free: (800) 327-0905
Fax: (305) 634-9078

V.J. KNEZEVICH
PROFESSIONAL ENGINEER
FL License No: PE 0010983

AUG 30 2002

revisions			
no	date	by	description
1	08/08/02	WAS	GENERAL REVISION
2	08/30/02	WAS	GENERAL REVISION

date 06/25/2002
scale AS NOTED
drawn by MCR
design by JAP
checked by VJK
drawing no. 02-267
sheet 4 of 6

Print Information: J:\CADD\Cadd02\HurstAwningCo\02-267\R2-prg\02-267-04.dwg AVazquez 08/30/2002 12:48:17pm
08/30/02 12:48

ANCHOR SCHEDULE

FASTENER MAXIMUM SPACING (INCHES) REQUIRED FOR VARIOUS DESIGN LOADS AND SPANS

EXIST. STRUC.	ANCHOR TYPE	LOAD (W) P.S.F. MAX. (SEE NOTE 1)	MIN. 2" EDGE DISTANCE															MIN. 3" EDGE DISTANCE														
			SPANS UP TO 5'-0" (SEE NOTE 1)					SPANS UP TO 8'-7" (SEE NOTE 1)					SPANS UP TO 12'-0" (SEE NOTE 1)					SPANS UP TO 5'-0" (SEE NOTE 1)					SPANS UP TO 8'-7" (SEE NOTE 1)					SPANS UP TO 12'-0" (SEE NOTE 1)				
			CONNECTION TYPE (SEE NOTE 3)					CONNECTION TYPE (SEE NOTE 3)					CONNECTION TYPE (SEE NOTE 3)					CONNECTION TYPE (SEE NOTE 3)					CONNECTION TYPE (SEE NOTE 3)					CONNECTION TYPE (SEE NOTE 3)				
			C1	C2	C3	C4	C5	C1	C2	C3	C4	C5	C1	C2	C3	C4	C5	C1	C2	C3	C4	C5	C1	C2	C3	C4	C5	C1	C2	C3	C4	C5
CONCRETE	1/4"Φ ITW BUILDEX TAPCON W/ 1-3/4" MIN. EMBEDMENT (MIN. 3,145 P.S.I. CONCRETE)	35.3	16	16	16	16	16	16	16	13	11	16	16	16	10	8	16	16	16	16	16	16	16	16	16	14	16	16	16	12	10	16
		47.2	16	16	16	14	16	16	16	10	8	16	16	12	7	6	16	16	16	16	16	16	16	16	13	10	16	16	13	9	7	16
		62.2	16	16	13	11	16	16	14	7	6.25	16	15	8	6.25	5	15	16	16	16	14	16	16	16	10	8	16	16	10	8	6.25	16
		72.0	16	16	11	9	16	15	9	6.25	5	15	15	8	6.25	5	15	16	16	15	12	16	16	10	8	7	16	16	10	8	6.25	16
		122.0	16	9	6.25	5	16	15	8	6.25	5	15	15	8	6.25	5	15	16	10	8	7	16	16	10	8	6.25	16	16	10	8	6.25	16
	1/4" ELCO MAXISET TAPCON W/ 1-3/4" MIN. EMBEDMENT (MIN. 3,320 P.S.I. CONCRETE)	35.3	16	16	16	16	16	16	16	16	12	16	16	16	11	9	16	16	16	16	16	16	16	16	16	15	16	16	16	14	11	16
		47.2	16	16	16	16	16	16	16	11	9	16	16	11	8	6.25	16	16	16	16	16	16	16	16	14	11	16	16	14	10	8	16
		62.2	16	16	15	12	16	16	13	9	7	16	14	8	7	6	14	16	16	16	15	16	16	16	11	8	16	16	10	9	7	16
		72.0	16	16	13	10	16	14	8	7	6	14	14	8	7	6	14	16	16	16	13	16	16	10	9	7	16	16	10	9	7	16
		122.0	15	9	8	6.25	15	14	8	7	6	14	14	8	7	6	14	16	11	10	7	16	16	10	9	7	16	16	10	9	7	16
	* * 1/4"Φ ELCO MALE/ FEMALE "PANELMATE" W/ 1-3/4 MIN. EMBEDMENT & 1/4-20 MACHINE SCREW WITH NUT (MIN. 3,000 P.S.I. CONCRETE)	35.3	16	16	16	16	16	16	16	15	12	16	16	16	11	9	16	16	16	16	16	16	16	16	16	15	16	16	16	13	11	16
		47.2	16	16	16	16	16	16	16	11	9	16	16	12	8	6.25	16	16	16	16	16	16	16	16	14	11	16	16	15	10	8	16
		62.2	16	16	15	12	16	16	15	8	7	16	16	9	7	6	16	16	16	16	15	16	16	16	10	8	16	16	11	9	7	16
		72.0	16	16	12	10	16	16	9	7	6	16	16	9	7	6	16	16	16	16	13	16	16	12	9	7	16	16	11	9	7	16
		122.0	16	10	7	6.25	16	16	9	7	6	16	16	9	7	6	16	16	12	9	7	16	16	11	9	7	16	16	11	9	7	16
	* 1/4"Φ POWERS CALK-IN W/ 7/8" EMBEDMENT & 1/4-20 STAINLESS STEEL MACHINE SCREW (MIN. 3,000 P.S.I. CONCRETE)	35.3	16	16	16	16	16	16	16	11	10	16	16	16	8	7	16	16	16	16	16	16	16	16	16	16	16	16	16	14	11	16
		47.2	16	16	15	13	16	16	16	8	7	16	16	12	6.25	5	16	16	16	16	16	16	16	16	14	12	16	16	15	10	8	16
		62.2	16	16	11	9	16	16	14	6.25	5	16	16	9	5	4	15	16	16	16	15	16	16	16	11	9	16	16	11	9	7	16
		72.0	16	16	10	8	16	16	9	5	4	16	16	9	5	4	15	16	16	16	13	16	16	11	9	7	16	16	11	9	7	16
		122.0	16	9	5	5	16	16	9	5	4	15	16	9	5	4	15	16	12	10	8	16	16	11	9	7	16	16	11	9	7	16
	1/4"Φ ELCO CRETE FLEX W/ 1-3/4" MIN. EMBEDMENT (MIN. 3,350 P.S.I. CONCRETE)	35.3	16	16	16	16	16	16	16	16	16	16	16	16	15	12	16	16	16	16	16	16	16	16	16	16	16	16	16	16	15	16
		47.2	16	16	16	16	16	16	16	16	12	16	16	15	11	9	16	16	16	16	16	16	16	16	16	15	16	16	16	14	11	16
		62.2	16	16	16	16	16	16	16	12	9	16	16	11	10	8	16	16	16	16	16	16	16	16	15	11	16	16	13	12	10	16
		72.0	16	16	16	14	16	16	11	10	8	16	16	11	10	8	16	16	16	16	16	16	16	13	13	10	16	16	13	12	10	16
		122.0	16	12	10	8	16	16	11	10	8	16	16	11	10	8	16	16	14	13	10	16	16	13	12	10	16	16	13	12	10	16

ANCHOR SCHEDULE

FASTENER MAXIMUM SPACING (INCHES) REQUIRED FOR VARIOUS DESIGN LOADS AND SPANS

EXIST. STRUC.	ANCHOR TYPE	LOAD (W) P.S.F. MAX. (SEE NOTE 1)	MIN. 3/4" EDGE DISTANCE														
			SPANS UP TO 5'-0" (SEE NOTE 1)					SPANS UP TO 8'-7" (SEE NOTE 1)					SPANS UP TO 12'-0" (SEE NOTE 1)				
			CONNECTION TYPE (SEE NOTE 3)					CONNECTION TYPE (SEE NOTE 3)					CONNECTION TYPE (SEE NOTE 3)				
			C1	C2	C3	C4	C5	C1	C2	C3	C4	C5	C1	C2	C3	C4	C5
WOOD	1/4"Φ x MIN. 1-3/4" LONG LAG SCREW W/ MIN. 1-3/4" EMBEDMENT SHEAR PARALLEL OR PERPENDICULAR TO WOOD GRAIN	35.3	16	16	16	16	16	16	16	12	11	16	16	16	9	8	16
		47.2	16	16	16	14	16	16	16	9	8	16	16	16	6.25	6	16
		62.2	16	16	12	11	16	16	16	7	6.25	16	16	14	6	5	16
		72.0	16	16	10	9	16	16	14	6	5	16	16	14	6	5	16
		122.0	16	15	6.25	5	16	16	14	6	5	16	16	14	6	5	16
	* * 1/4"Φ ELCO MALE/ FEMALE "PANELMATE" W/ 1-7/8 MIN. EMBEDMENT & 1/4-20 MACHINE SCREW WITH NUT	35.3	16	16	16	16	16	16	16	16	14	16	16	16	11	10	16
		47.2	16	16	16	16	16	16	16	12	10	16	16	16	8	7	16
		62.2	16	16	16	13	16	16	16	9	8	16	16	14	7	6.25	16
		72.0	16	16	13	11	16	16	14	8	6.25	16	16	14	7	6.25	16
		122.0	16	15	8	7	16	16	14	7	6.25	16	16	14	7	6.25	16

ANCHOR NOTES:

1. **SPANS AND DESIGN LOADS SHOWN HERE ARE FOR DETERMINING ANCHOR SPACING ONLY. ALLOWABLE STORM PANEL SPANS FOR SPECIFIC LOADS MUST BE LIMITED TO THOSE SHOWN IN TABLE 1.**
2. ENTER ANCHOR SCHEDULE BASED ON THE EXISTING STRUCTURE MATERIAL, ANCHOR TYPE AND EDGE DISTANCE. SELECT DESIGN LOAD GREATER THAN OR EQUAL TO NEGATIVE DESIGN LOAD ON SHUTTER AND SELECT SPAN GREATER THAN OR EQUAL TO SHUTTER SPAN.
3. SEE MOUNTING SECTION DETAILS FOR IDENTIFICATION OF CONNECTION TYPE.
4. EXISTING STRUCTURE MAY BE CONCRETE, HOLLOW BLOCK OR WOOD FRAMING. REFERENCE ANCHOR SCHEDULE FOR PROPER ANCHOR TYPE BASED ON TYPE OF EXISTING STRUCTURE.
5. ANCHOR SHALL BE INSTALLED IN ACCORDANCE WITH MANUFACTURER'S RECOMMENDATIONS. MINIMUM EMBEDMENT LENGTHS AND EDGE DISTANCES SHALL BE AS NOTED AND SHALL NOT INCLUDE STUCCO OR OTHER WALL FINISHES. MINIMUM EMBEDMENT DEPTH FOR LAG SCREWS SHALL ONLY INCLUDE THE THREADED PORTION.
6. WHERE EXISTING STRUCTURE IS WOOD FRAMING, WOOD FRAMING CONDITIONS VARY. FIELD VERIFY THAT FASTENERS ARE INTO ADEQUATE WOOD FRAMING MEMBERS, NOT PLYWOOD. FASTENING TO PLYWOOD IS ACCEPTABLE ONLY FOR SIDE CLOSURE PIECES.
7. WHERE LAG SCREWS FASTEN TO NARROW FACE OF STUD FRAMING, FASTENER SHALL BE LOCATED IN CENTER OF NOMINAL 2" x 4" (MIN.) WOOD STUD. 3/4" EDGE DISTANCE IS ACCEPTABLE FOR WOOD FRAMING. WOOD STUD SHALL BE "SOUTHERN PINE" G=0.55 OR GREATER DENSITY. LAG SCREWS SHALL HAVE PHILLIPS PAN HEAD OR HEX HEAD.
8. MACHINE SCREWS SHALL HAVE MINIMUM OF 1/2" ENGAGEMENT OF THREADS IN BASE ANCHOR AND MAY HAVE EITHER A PAN HEAD, TRUSS HEAD, OR WAFER HEAD (SIDEWALK BOLT) AND WITH OPTIONAL KEYHOLE WASHER FOR DIRECT MOUNT CONDITIONS, U.O.N.
9. DESIGNATES ANCHOR CONDITIONS WHICH ARE NOT ACCEPTABLE USES.

*10. DESIGNATES ANCHORS WHICH ARE REMOVABLE BY REMOVING MACHINE SCREW, NUT OR WASHERED WINGNUT. REMOVABLE ANCHORS ARE REQUIRED FOR DIRECT MOUNT @ 6", 6-1/4", 12" OR 12-1/2" O.C. MAX. SPACING ONLY. SPACINGS SHALL NOT EXCEED VALUE SPECIFIED IN ANCHOR SCHEDULE. LOCATE FASTENER IN NARROW PORTION OF KEYHOLE SLOT.

Approved as complying with the Florida Buiding Code
Date 08/30/2002
NOA# 02-0627.01
Miami Dade Product Control Division
By

KNEZEVICH & ASSOCIATES, INC.
CONSULTING ENGINEERS • PRODUCT TESTING
1260 N. UNIVERSITY DRIVE, SUITE 180 • FORT LAUDERDALE, FL 33322
TEL: (954) 382-2800 • FAX: (954) 382-2989 • FLORIDA COA # 3205
WEBSITE: WWW.KNEZEVICH.COM • E-MAIL: KA@KNEZEVICH.COM

COPYRIGHT © 2002 KNEZEVICH & ASSOCIATES, INC.

THE 24 STEEL STORM PANEL SHUTTER

Manufacturers of Hurricane & Security Protection Products
HURST AWNING COMPANY, INC. QUALITY SERVICE SINCE 1957
6865 N.W. 36th Avenue
Miami, Florida 33147
Phone: (305) 635-0900
Toll Free: (800) 327-0905
Fax: (305) 634-9078

V.J. KNEZEVICH
PROFESSIONAL ENGINEER
FL License No: PE 0010983

AUG 30 2002

revisions			
no	date	by	description
1	06/06/02	WAS	GENERAL REVISION
2	08/30/02	WAS	GENERAL REVISION

date 06/25/2002
scale AS NOTED
drawn by MCR
design by JAP
checked by VJK
drawing no. 02-267
sheet 5 of 6

ANCHOR SCHEDULE

FASTENER MAXIMUM SPACING (INCHES) REQUIRED FOR VARIOUS DESIGN LOADS AND SPANS

EXIST. STRUC.: HOLLOW CONCRETE BLOCK

ANCHOR TYPE	LOAD (W) P.S.F. MAX. (SEE NOTE 1)	MIN. 2" EDGE DISTANCE															MIN. 3" EDGE DISTANCE													
		SPANS UP TO 5'-0" (SEE NOTE 1)					SPANS UP TO 8'-7" (SEE NOTE 1)					SPANS UP TO 12'-0" (SEE NOTE 1)					SPANS UP TO 5'-0" (SEE NOTE 1)					SPANS UP TO 8'-7" (SEE NOTE 1)					SPANS UP TO 12'-0" (SEE NOTE 1)				
		CONNECTION TYPE (SEE NOTE 3)					CONNECTION TYPE (SEE NOTE 3)					CONNECTION TYPE (SEE NOTE 3)					CONNECTION TYPE (SEE NOTE 3)					CONNECTION TYPE (SEE NOTE 3)					CONNECTION TYPE (SEE NOTE 3)				
		C1	C2	C3	C4	C5	C1	C2	C3	C4	C5	C1	C2	C3	C4	C5	C1	C2	C3	C4	C5	C1	C2	C3	C4	C5	C1	C2	C3	C4	C5
1/4"Φ ITW BUILDEX W/ 1-1/4" MIN. EMBEDMENT MIN. EMBEDMENT	35.3	16	16	11	8	16	10	10	6.25	5	10	7	7	4	3	7	16	16	14	10	16	12	12	8	6	12	8	8	5	4	8
	47.2	13	13	8	6.25	13	8	8	5	3	8	5	4	3		5	15	15	10	7	15	9	9	6	4	9	6.25	4	4	3	6.25
	62.2	10	10	6.25	5	10	6	4	3		6	5		3		5	11	11	8	6	11	6.25	5	4	3	6.25	5	3	4		5
	72.0	9	9	5	4	9	5	3	3		5	5		3		5	10	10	7	5	10	5	3	4	3	5	5	3	4		5
	122.0	5	3	3		5	5		3		5	5		3		5	6	3	4	3	6	5	3	4		5	5	3	4		5
1/4" ELCO MAXISET TAPCON W/ 1-1/4" MIN. EMBEDMENT	35.3	16	16	16	12	16	13	13	9	7	13	9	9	6.25	5	9	16	16	16	15	16	16	16	12	8	16	12	12	8	6.25	12
	47.2	16	16	12	9	16	10	10	7	5	10	7	5	5	3	7	16	16	15	11	16	12	12	8	6.25	12	9	6.25	6.25	4	9
	62.2	13	13	9	7	13	7	6	5	4	7	6.25	3	4	3	6.25	16	16	11	8	16	9	7	6.25	5	9	8	4	5	4	8
	72.0	11	11	8	6	11	6.25	3	4	3	6.25	6.25	3	4	3	6.25	14	14	10	7	14	8	4	5	4	8	8	4	5	4	8
	122.0	6.25	4	4	3	6.25	6.25	3	4	3	6.25	6.25	3	4	3	6.25	8	5	6	4	8	8	4	5	4	8	8	4	5	4	8
* * 1/4"Φ ELCO MALE/ FEMALE "PANELMATE" W/ 1-1/4 MIN. EMBEDMENT & 1/4-20 MACHINE SCREW WITH NUT	35.3	16	16	16	13	16	16	16	9	7	16	14	14	6.25	5	14	16	16	16	14	16	16	16	10	8	16	15	15	7	6	15
	47.2	16	16	12	9	16	15	15	7	5	15	11	7	5	4	11	16	16	14	11	16	16	16	8	6.25	16	11	8	5	4	11
	62.2	16	16	9	7	16	11	9	5	4	11	9	5	4	3	9	16	16	10	8	16	12	9	6	4	12	10	5	5	4	10
	72.0	16	16	7	6.25	16	10	5	4	3	10	9	5	4	3	9	16	16	9	7	16	10	6	5	4	10	10	5	5	4	10
	122.0	10	6	4	3	10	9	5	4	3	9	9	5	4	3	9	10	6.25	5	4	10	10	5	5	4	10	10	5	5	4	10
* 1/4"Φ POWERS CALK-IN W/ 7/8" EMBEDMENT & 1/4-20 STAINLESS STEEL MACHINE SCREW	35.3	16	16	12	9	16	13	13	7	5	13	9	9	5	4	9	16	16	16	14	16	16	16	11	8	16	12	12	8	6	12
	47.2	16	16	9	7	16	10	10	5	4	10	7	5	3	3	7	16	16	14	11	16	12	12	8	6.25	12	9	6.25	6	4	9
	62.2	13	13	7	5	13	7	6	4	3	7	6.25	3	3		6.25	16	16	11	8	16	9	7	6.25	4	9	8	4	5	4	8
	72.0	11	11	6	4	11	6.25	3	3		6.25	6.25	3	3		6.25	14	14	9	7	14	8	4	5	4	8	8	4	5	4	8
	122.0	6.25	4	3		6.25	6.25	3	3		6.25	6.25	3	3		6.25	8	5	5	4	8	8	4	5	4	8	8	4	5	4	8
1/4"Φ ELCO CRETE FLEX W/ 1-1/4" MIN. EMBEDMENT	35.3	16	16	16	16	16	16	16	12	10	16	16	16	9	7	16	16	16	16	16	16	16	16	13	10	16	16	16	9	7	16
	47.2	16	16	16	13	16	16	16	9	7	16	12	8	7	5	12	16	16	16	13	16	16	16	9	7	16	12	8	7	5	12
	62.2	16	16	12	9	16	12	10	7	5	12	11	6.25	6.25	4	11	16	16	13	10	16	13	10	7	5	13	11	6.25	6.25	5	11
	72.0	16	16	11	8	16	11	6.25	6.25	4	11	11	6.25	6.25	4	11	16	16	11	8	16	11	6.25	6.25	5	11	11	6.25	6.25	5	11
	122.0	11	6.25	6.25	5	11	11	6.25	6.25	4	11	11	6.25	6.25	4	11	12	7	6.25	5	12	11	6.25	6.25	5	11	11	6.25	6.25	5	11

SEE PAGE 4 FOR COMPLETE ANCHOR NOTES.

TABLE 1 NOTE:

1. ENTER TABLE 1 WITH NEGATIVE DESIGN LOAD TO DETERMINE MAX. PANEL LENGTH. POSITIVE LOADS LESS THAN OR EQUAL TO THE NEGATIVE LOAD ARE ACCEPTABLE. FOR DESIGN LOADS BETWEEN TABULATED VALUES. NEXT HIGHER LOAD OR LINEAR INTERPOLATION MAY BE USED TO DETERMINE ALLOWABLE SPANS.

TABLE 2 NOTE:

1. ENTER TABLE 2 WITH POSITIVE DESIGN LOAD TO DETERMINE MIN. STORM PANEL SEPARATION FROM GLASS.

Approved as complying with the Florida Building Code
Date 08/30/2002
NOA# 02-0627.01
Miami Dade Product Control Division
By

TABLE 1 — MAX. ALLOWABLE STORM PANEL SPAN SCHEDULE

DESIGN LOAD (P.S.F.)	SPAN (FT - IN)
30.0	12 - 0
33.0	11 - 10
35.0	11 - 7
40.0	11 - 3
40.7	11 - 2
45.0	10 - 11
50.0	10 - 5
55.0	9 - 11
59.3	9 - 7
60.0	9 - 6
62.0	9 - 4
65.0	9 - 2
70.0	8 - 10
72.0	8 - 8
75.0	7 - 11
80.0	7 - 8
90.0	7 - 0
100.0	6 - 3
105.0	6 - 0
110.0	5 - 8
120.0	5 - 3
122.0	5 - 2

TABLE 2 — MINIMUM STORM PANEL SEPARATION FROM GLASS

POSITIVE DESIGN LOAD (W) (P.S.F.)	ACTUAL SPAN (L) (FT - IN)	COLUMN 1: MIN. SEP. FOR ALL INSTALLATIONS LESS THAN 30' ABOVE GRADE (INCHES)	COLUMN 2: MIN. SEP. FOR ALL INSTALLATIONS GREATER THAN 30' ABOVE GRADE (INCHES)
30.0	6'-0"	2-3/4	1-1/4
	8'-8"	2-3/4	1-5/8
	12'-0"	3-3/8	3
40.0	6'-0"	2-3/4	1-1/4
	8'-8"	2-3/4	1-3/4
	11'-3"	3-3/8	3
50.0	6'-0"	2-3/4	1-3/8
	8'-8"	2-3/4	2
	10'-4"	3-3/8	2-7/8
60.0	6'-0"	2-3/4	1-3/8
	8'-8"	2-3/4	2-1/8
	9'-6"	3-3/8	2-1/2
70.0	6'-0"	2-3/4	1-3/8
	8'-8"	2-3/4	2-1/4
	8'-10"	3-3/8	2-3/8
80.0	5'-0"	2-3/4	1-1/4
	6'-0"	2-3/4	1-1/2
	7'-8"	2-3/4	2

KNEZEVICH & ASSOCIATES, INC.
CONSULTING ENGINEERS • PRODUCT TESTING
1260 N. UNIVERSITY DRIVE, SUITE 180 • FORT LAUDERDALE, FL 33322
TEL: (954) 382-2800 • FAX: (954) 382-2989 • FLORIDA COA #3205
WEBSITE: WWW.KNEZEVICH.COM • E-MAIL: KA@KNEZEVICH.COM
COPYRIGHT © 2002 KNEZEVICH & ASSOCIATES, INC

THE 24 STEEL STORM PANEL SHUTTER

Manufacturers of Hurricane & Security Protection Products
6865 N.W. 36th Avenue
Miami, Florida 33147
Phone: (305) 635-0900
Toll Free: (800) 327-0905
Fax: (305) 634-9078
HURST AWNING COMPANY, INC. QUALITY SERVICE SINCE 1957

V.J. KNEZEVICH
PROFESSIONAL ENGINEER
FL License No: PE 0010983

AUG 30 2002

revisions

no	date	by	description
1	08/06/02	AS	GENERAL REVISION
2	08/30/02	AS	GENERAL REVISION

date 06/25/2002
scale AS NOTED | drawn by MCR
design by JAP | checked by VJK
drawing no. 02-267
sheet 6 of 6

Print Information: J:\CADD\Cadd02\HurstAwningCo\02-267\R2-prg\02-267-06.dwg AVazquez 08/30/2002 12:57:28pm
08/30/02 12:57