MIAMI-DADE

BUILDING CODE COMPLIANCE OFFICE (BCCO)
PRODUCT CONTROL DIVISION

MIAMI-DADE COUNTY, FLORIDA
METRO-DADE FLAGLER BUILDING
140 WEST FLAGLER STREET, SUITE 1603
MIAMI, FLORIDA 33130-1563
(305) 375-2901 FAX (305) 375-2908

NOTICE OF ACCEPTANCE (NOA)

PGT Industries
P.O. Box 1529
Nokomis, FL 34274

SCOPE:

This NOA is being issued under the applicable rules and regulations governing the use of construction materials. The documentation submitted has been reviewed by Miami-Dade County Product Control Division and accepted by the Board of Rules and Appeals (BORA) to be used in Miami Dade County and other areas where allowed by the Authority Having Jurisdiction (AHJ).

This NOA shall not be valid after the expiration date stated below. The Miami-Dade County Product Control Division (In Miami Dade County) and/or the AHJ (in areas other than Miami Dade County) reserve the right to have this product or material tested for quality assurance purposes. If this product or material fails to perform in the accepted manner, the manufacturer will incur the expense of such testing and the AHJ may immediately revoke, modify, or suspend the use of such product or material within their jurisdiction. BORA reserves the right to revoke this acceptance, if it is determined by Miami-Dade County Product Control Division that this product or material fails to meet the requirements of the applicable building code.
This product is approved as described herein, and has been designed to comply with the High Velocity Hurricane Zone of the Florida Building Code.

DESCRIPTION: Series "ATW-400" Aluminum Awning Window

APPROVAL DOCUMENT: Drawing No. 444, titled "Pro-View Alum. Awning Windows," Sheets 1 through 6 of 6, prepared by manufacturer, dated 6/21/01 and last revised 10/18/01, signed and sealed by Robert L. Clark, P.E., bearing the Miami-Dade County Product Control Revision stamp with the Notice of Acceptance number and expiration date by the Miami-Dade County Product Control Division.

MISSILE IMPACT RATING: None

LABELING: Each unit shall bear a permanent label with the manufacturer's name or logo, city, state and following statement: "Miami-Dade County Product Control Approved", unless otherwise noted herein.

RENEWAL of this NOA shall be considered after a renewal application has been filed and there has been no change in the applicable building code negatively affecting the performance of this product.

TERMINATION of this NOA will occur after the expiration date or if there has been a revision or change in the materials, use, and/or manufacture of the product or process. Misuse of this NOA as an endorsement of any product, for sales, advertising or any other purposes shall automatically terminate this NOA. Failure to comply with any section of this NOA shall be cause for termination and removal of NOA.

ADVERTISEMENT: The NOA number preceded by the words Miami-Dade County, Florida, and followed by the expiration date may be displayed in advertising literature. If any portion of the NOA is displayed, then it shall be done in its entirety.

INSPECTION: A copy of this entire NOA shall be provided to the user by the manufacturer or its distributors and shall be available for inspection at the job site at the request of the Building Official.
This NOA **revises NOA # 01-0712.05** and, consists of this page 1 as well as approval document mentioned above.
The submitted documentation was reviewed by **Ishaq I. Chanda, P.E.**

PRODUCT CONTROL ACCEPTED

PGT Industries

NOTICE OF ACCEPTANCE: EVIDENCE SUBMITTED

(For File ONLY. Not part of NOA)

A. DRAWINGS

1. Manufacturer's die drawings and sections.
2. Drawing No. **444**, titled "Pro-View Alum. Awning Windows," Sheets 1 through 6 of 6, prepared by manufacturer, dated 6/21/01 and last revised 10/18/01, signed and sealed by Robert L. Clark, P.E.

B. TESTS (transferred from file#01-0712.05)

1. Test reports on 1) Air Infiltration Test, per PA 202-94
   2) Uniform Static Air Pressure Test, Loading per PA 202-94
   3) Water Resistance Test, per PA 202-94
   4) Forced Entry Test, per SFBC 3603.2 (b) and PA 202-94

   along with marked-up drawings and installation diagram of aluminum awning windows, issued by Fenestration Testing Laboratory, Inc., Test Report No. **FTL-3048** and **3049** dated June 06,2001, reviewed and signed and sealed by Luis Figueredo, P.E.

C. CALCULATIONS (transferred from file#01-0712.05)

1. Comparative Analysis and Anchor & glazing Calculations, prepared by PGT Industries, dated 07/06/01, and revised on 11/26/01, signed and sealed by Robert L. Clark, P.E.

D. MATERIAL CERTIFICATIONS

1. None

E. STATEMENTS (transferred from file#01-0712.05)

1. Statement letter of conformance and no financial interest dated July 06, 2001 signed and sealed by Robert L. Clark, P.E.
2. Laboratory compliance letter for Test Report No. **FTL-3048** and **3049** issued by Fenestration Testing laboratory, dated June 06,2001, signed & sealed by Luis Figueredo, P.E.

E. OTHER

1. This NOA **revises** NOA 01-0712.05
2. Letter from PGT dated June 17, 2002 requesting updated NOA format

Ishaq I. Chanda

Ishaq I. Chanda, P.E. Product Control Examiner
Product Control Division
NOA No 02-0702.08
Expiration Date: December 20, 2006
Approval Date: July 29, 2002

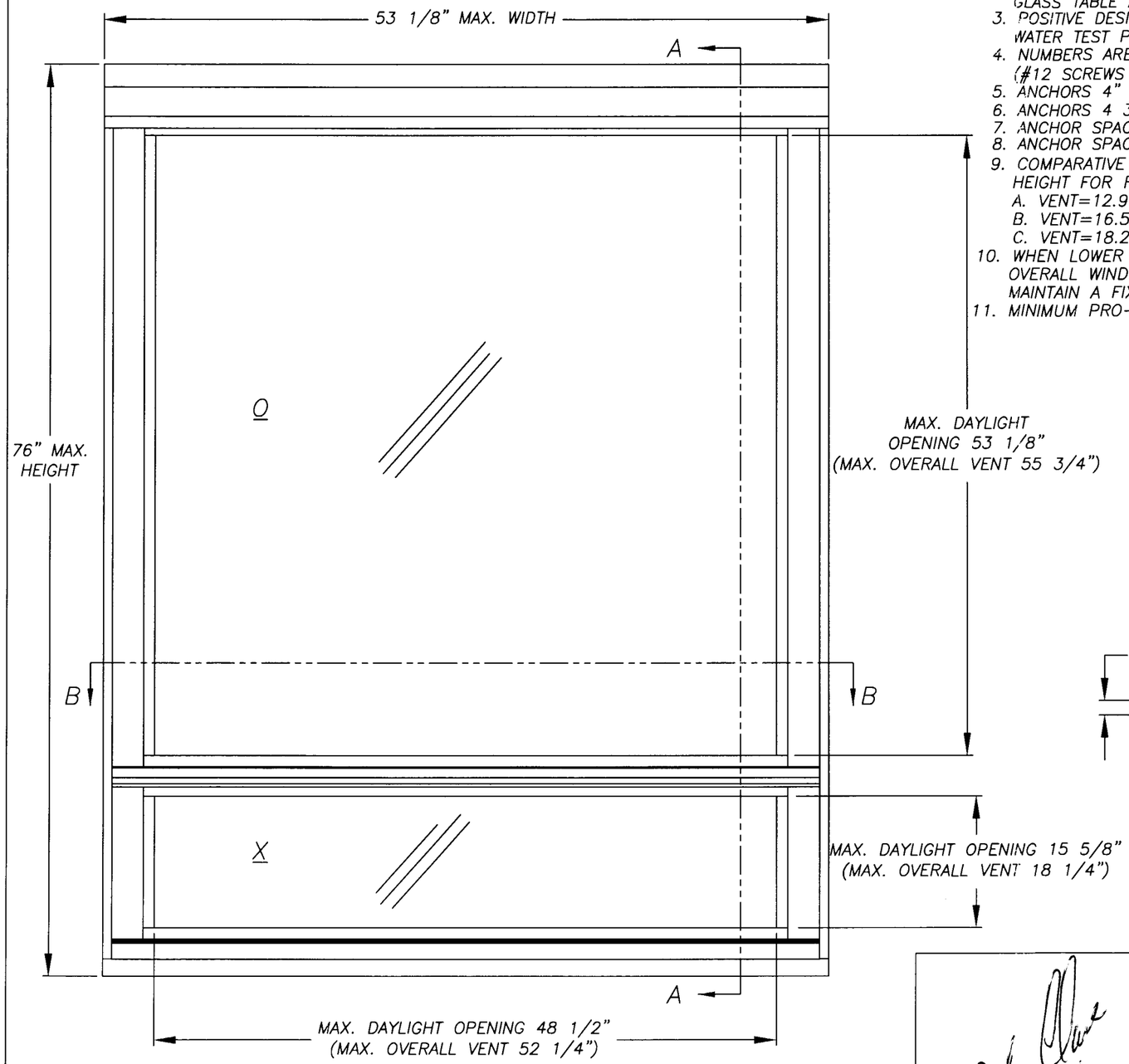

COMPARATIVE ANALYSIS NOTES:

1. NUMBERS IN ( ) PARENTHESES ARE QUANTITY OF ANCHORS PER SIDE.
2. NEGATIVE DESIGN LOADS BASED ON COMPARATIVE ANALYSIS & GLASS TABLE ASTM E1300.
3. POSITIVE DESIGN LOADS BASED ON COMPARATIVE ANALYSIS & WATER TEST PRESSURE.
4. NUMBERS ARE FOR #10 SCREWS OR 3/16" TAPCONS. (#12 SCREWS MAY BE SUBSTITUTED)
5. ANCHORS 4" MAX. FROM CORNERS AT HEAD.
6. ANCHORS 4 3/4" MAX. FROM CORNERS AT JAMBS.
7. ANCHOR SPACING – MAX. 22 1/2" AT HEAD.
8. ANCHOR SPACING – MAX. 16 1/2" AT JAMBS.
9. COMPARATIVE ANALYSIS ASSUMES MAXIMUM LOWER VENT HEIGHT FOR RESPECTIVE WINDOW HEIGHT.
   A. VENT=12.94 MAX. WINDOW HEIGHTS 27.75> TO 50.00<
   B. VENT=16.50 MAX. WINDOW HEIGHTS 50.00> TO 68.00<
   C. VENT=18.25 MAX. WINDOW HEIGHTS 68.00> TO 76.00<
10. WHEN LOWER VENT HEIGHT IN NOTE 9 IS REDUCED, OVERALL WINDOW HEIGHT MUST BE REDUCED TO MAINTAIN A FIXED VENT HEIGHT OF 55.75 MAX.
11. MINIMUM PRO-VIEW WINDOW HEIGHT = 27 3/4".

COMPARATIVE ANALYSIS FOR: O=3/16" TEMPERED GLASS
X=3/16" TEMPERED GLASS
TEST REPORT: FTL-3048

WIDTHS	HEIGHTS 27.750 (3)	38.375 (4)	50.625 (5)	63.000 (5)	76.000 (6)
19.125 (2)	-58.6	-58.6	-36.5	-36.5	-30.0
	45.0	45.0	36.5	36.5	30.0
24.000 (2)	-58.6	-58.6	-36.5	-36.5	-30.0
	45.0	45.0	36.5	36.5	30.0
26.500 (2)	-58.6	-58.6	-36.5	-36.5	-30.0
	45.0	45.0	36.5	36.5	30.0
32.000 (3)	-58.6	-58.6	-36.5	-36.5	-30.0
	45.0	45.0	36.5	36.5	30.0
37.000 (3)	-58.6	-58.6	-36.5	-36.5	-30.0
	45.0	45.0	36.5	36.5	30.0
40.000 (3)	-58.6	-58.6	-36.5	-36.5	-30.0
	45.0	45.0	36.5	36.5	30.0
44.000 (3)	-58.6	-52.0	-36.5	-36.5	-30.0
	45.0	45.0	36.5	36.5	30.0
48.000 (3)	-58.6	-46.4	-36.5	-36.5	-30.0
	45.0	45.0	36.5	36.5	30.0
53.125 (4)	-52.2	-40.9	-33.8	-31.2	-30.0
	45.0	40.9	33.8	31.2	30.0

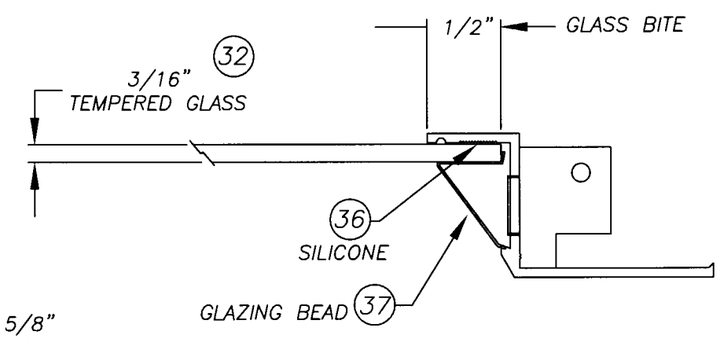

GLAZING DETAIL

PRODUCT REVISED
to complying with the Florida Building Code
Acceptance No. 02-0762.08
Expiration Date Dec 20, 2006
By Ishaq I. Chanda
Miami Dade Product Control Division

APPROVED AS COMPLYING WITH THE SOUTH FLORIDA BUILDING CODE
DATE DECEMBER 20, 2001
BY Ishaq I. Chanda
PRODUCT CONTROL DIVISION
BUILDING CODE COMPLIANCE OFFICE
ACCEPTANCE NO. 01-0712.05

NON-IMPACT WINDOWS

1.) CONFIGURATION: OX
2.) MIAMI-DADE COUNTY APPROVED SHUTTERS ARE REQUIRED AT ALL INSTALLATIONS
3.) SEE SHEET 3 OF 6 FOR SECTION DETAILS
4.) PRESSURES UNDER 40 P.S.F. NOT APPLICABLE IN MIAMI-DADE COUNTY

11/27/01

Robert L. Clark, P.E.
PE #39712
Structural

PGT INDUSTRIES

1070 TECHNOLOGY DRIVE
NOKOMIS, FL 34275

P.O. BOX 1529
NOKOMIS, FL 34274

Revsd By:	Date:	Revisions:
F.K.	10/18/01	PER LTR 10/11
Revsd By: F.K.	Date: 9/21/01	Revisions: REDRAWN
Drawn By: F.K.	Date: 6/21/01	

Description: 53 1/8" WIDE X 76" HIGH

Title: PRO-VIEW ALUM. AWNING WINDOWS

Series/Model:	Scale:	Sheet:	Drawing No.	Rev:
ATW-400	NTS	1 of 6	444	B

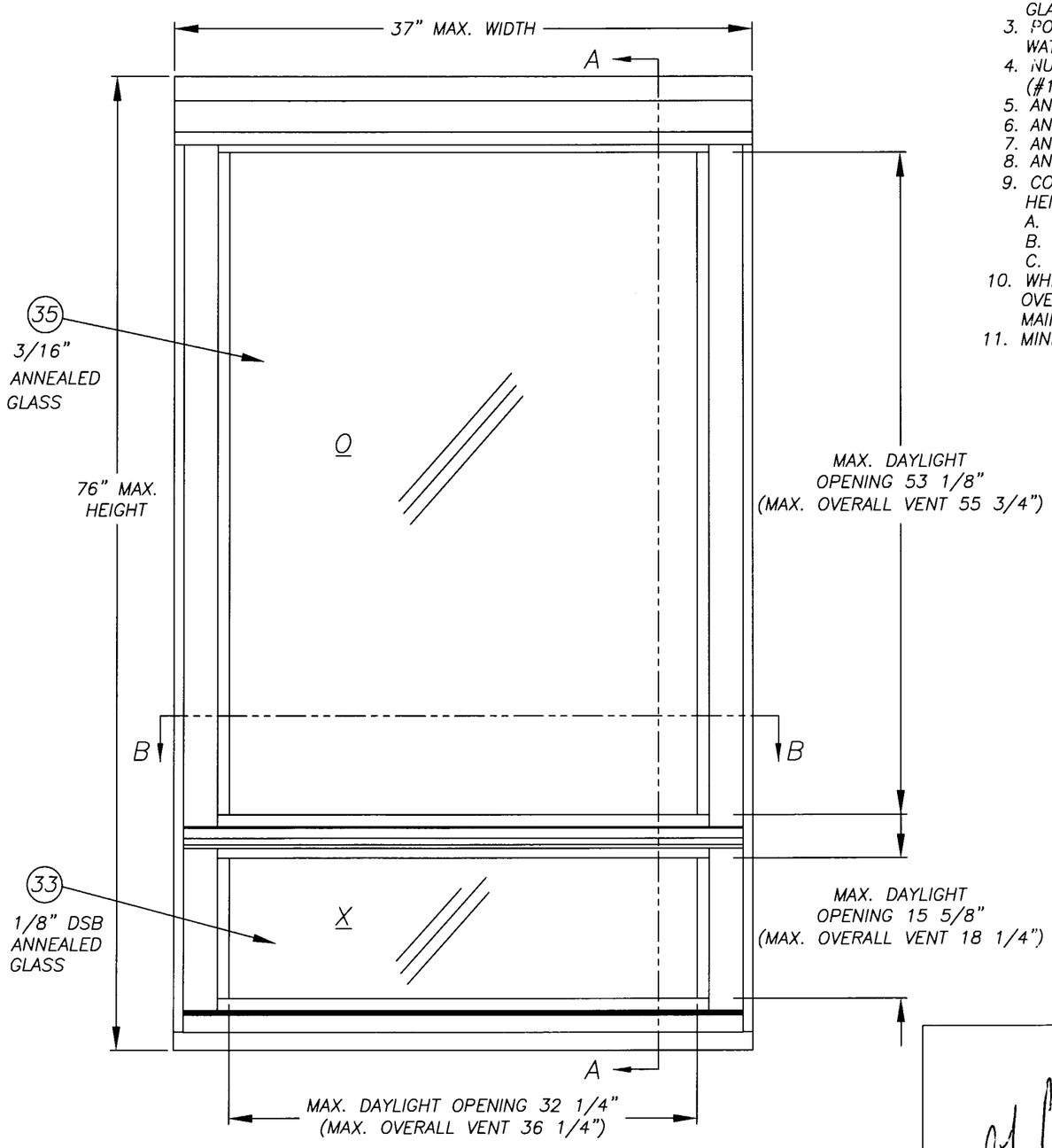

COMPARATIVE ANALYSIS NOTES:

1. NUMBERS IN ( ) PARENTHESES ARE QUANTITY OF ANCHORS PER SIDE.
2. NEGATIVE DESIGN LOADS BASED ON COMPARATIVE ANALYSIS & GLASS TABLE ASTM E1300.
3. POSITIVE DESIGN LOADS BASED ON COMPARATIVE ANALYSIS & WATER TEST PRESSURE.
4. NUMBERS ARE FOR #10 SCREWS OR 3/16" TAPCONS. (#12 SCREWS MAY BE SUBSTITUTED)
5. ANCHORS 4" MAX. FROM CORNERS AT HEAD.
6. ANCHORS 4 3/4" MAX. FROM CORNERS AT JAMBS.
7. ANCHOR SPACING – MAX. 22 1/2" AT HEAD.
8. ANCHOR SPACING – MAX. 16 1/2" AT JAMBS.
9. COMPARATIVE ANALYSIS ASSUMES MAXIMUM LOWER VENT HEIGHT FOR RESPECTIVE WINDOW HEIGHT.
   A. VENT=12.94 MAX. WINDOW HEIGHTS 27.75> TO 50.00<
   B. VENT=16.50 MAX. WINDOW HEIGHTS 50.00> TO 68.00<
   C. VENT=18.25 MAX. WINDOW HEIGHTS 68.00> TO 76.00<
10. WHEN LOWER VENT HEIGHT IN NOTE 9 IS REDUCED, OVERALL WINDOW HEIGHT MUST BE REDUCED TO MAINTAIN A FIXED VENT HEIGHT OF 55.75 MAX.
11. MINIMUM PRO-VIEW WINDOW HEIGHT = 27 3/4".

COMPARATIVE ANALYSIS FOR: O=3/16" ANNEALED GLASS
X=1/8" DSB ANNEALED GLASS
TEST REPORT: FTL-3049

	HEIGHTS				
WIDTHS	27.750 (3)	38.375 (4)	50.625 (5)	63.000 (5)	76.000 (6)
19.125 (2)	-75.0 45.0	-75.0 45.0	-54.8 45.0	-54.8 45.0	-45.0 45.0
24.000 (2)	-75.0 45.0	-75.0 45.0	-54.8 45.0	-54.8 45.0	-45.0 45.0
26.000 (2)	-75.0 45.0	-75.0 45.0	-54.8 45.0	-54.8 45.0	-45.0 45.0
32.000 (3)	-75.0 45.0	-65.4 45.0	-54.8 45.0	-54.8 45.0	-42.7 42.7
37.000 (3)	-64.8 45.0	-53.1 45.0	-46.5 45.0	-46.3 45.0	-39.6 39.6

GLASS THICKNESS		
ITEM	DIM 'A'	GLASS TYPE
35	3/16"	ANNEALED
33	1/8"	DSB ANNEALED

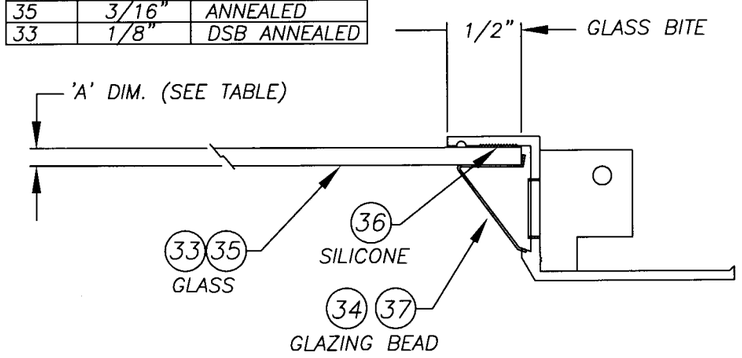

GLAZING DETAIL

PRODUCT REVISED
as complying with the Florida Building Code
Acceptance No. 02-0702.08
Expiration Date DEC 20, 2006
By Ishaq I. Chanda
Miami Dade Product Control Division

APPROVED AS COMPLYING WITH THE SOUTH FLORIDA BUILDING CODE
DATE DEC 20, 2001
BY Ishaq I. Chanda
PRODUCT CONTROL DIVISION
BUILDING CODE COMPLIANCE OFFICE
ACCEPTANCE NO 01-0712.05

NON-IMPACT WINDOWS

1.) CONFIGURATION: OX
2.) MIAMI-DADE COUNTY APPROVED SHUTTERS ARE REQUIRED AT ALL INSTALLATIONS
3.) SEE SHEET 3 OF 6 FOR SECTION DETAILS
4.) PRESSURES UNDER 40 P.S.F. NOT APPLICABLE IN MIAMI-DADE COUNTY

Robert L. Clark, P.E.
PE #39712
Structural

PGT INDUSTRIES

1070 TECHNOLOGY DRIVE
NOKOMIS, FL 34275

P.O. BOX 1529
NOKOMIS, FL 34274

Revsd By:	Date:	Revisions:
F.K.	10/18/01	PER LTR 10/11
F.K.	9/21/01	REDRAWN
Drawn By: F.K.	Date: 6/21/01	

Description: 37" WIDE X 76" HIGH

Title: PRO-VIEW ALUM. AWNING WINDOWS

Series/Model:	Scale:	Sheet:	Drawing No.	Rev:
ATW-400	NTS	2 of 6	444	B

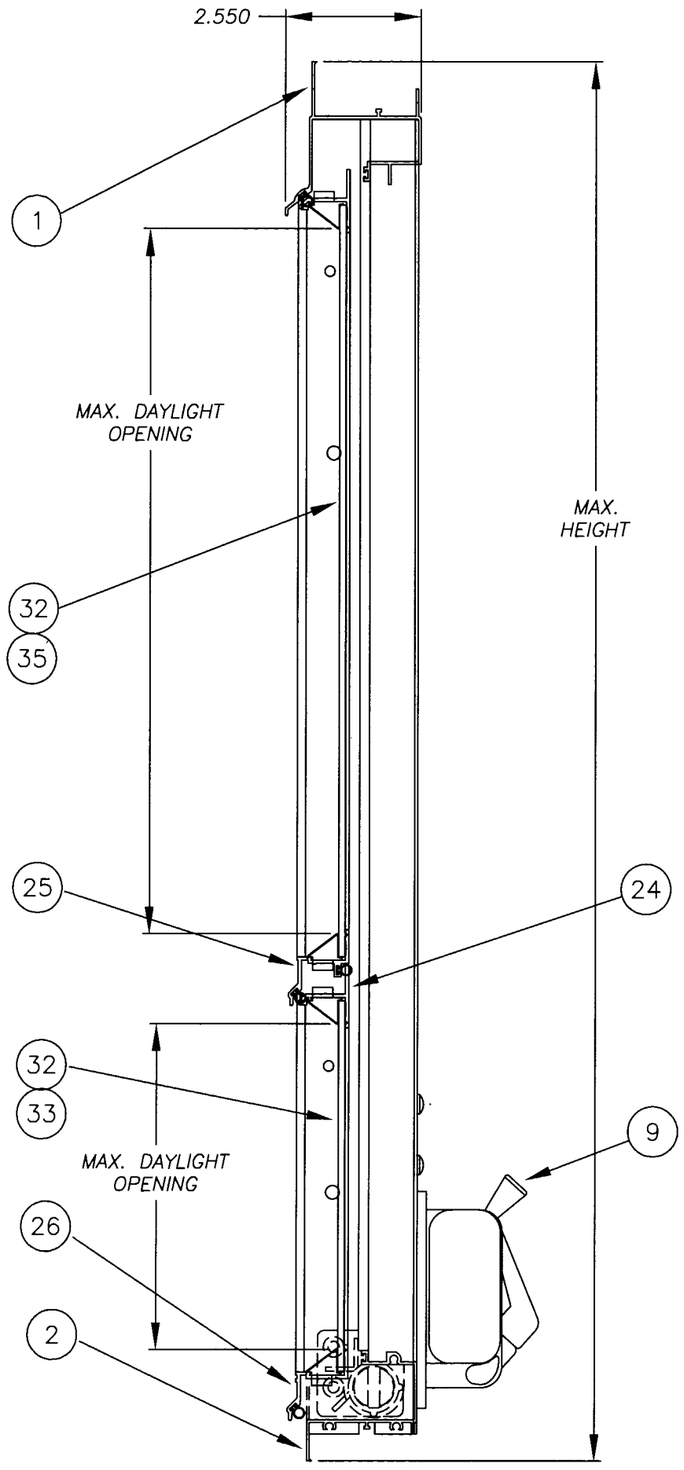

SECTION A–A

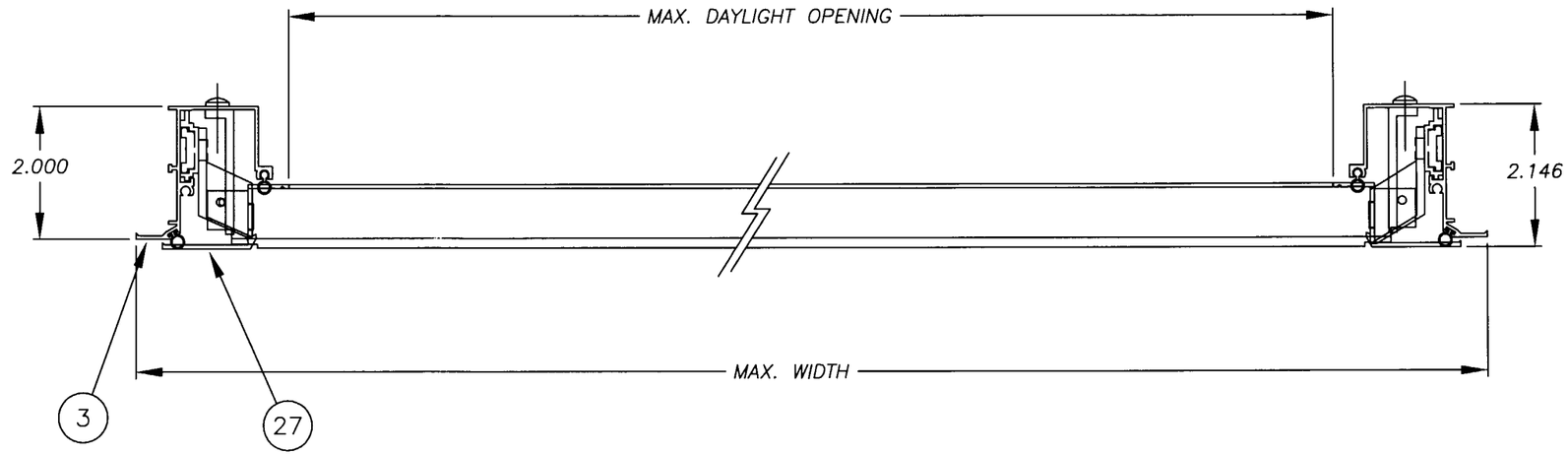

SECTION B–B

NON–IMPACT WINDOWS

1.) CONFIGURATION: OX
2.) REFERENCE TEST REPORTS: FTL–3048 & FTL–3049

PRODUCT REVISED
as complying with the Florida Building Code
Acceptance No. 02-0702.08
Expiration Date DEC 20, 2006
By Ishaq I. Chanda
Miami Dade Product Control Division

APPROVED AS COMPLYING WITH THE SOUTH FLORIDA BUILDING CODE
DATE DEC 20, 2001
BY Ishaq I. Chanda
PRODUCT CONTROL DIVISION
BUILDING CODE COMPLIANCE OFFICE
ACCEPTANCE NO. 01-0712.05

Robert L. Clark, P.E.
PE #39712
Structural

PGT INDUSTRIES
1070 TECHNOLOGY DRIVE
NOKOMIS, FL 34275
P.O. BOX 1529
NOKOMIS, FL 34274

Revsd By:	Date:	Revisions:
F.K.	10/18/01	PER LTR 10/11
F.K.	9/21/01	REDRAWN
Drawn By: F.K.	Date: 6/21/01	

Description: SECTIONS

Title: PRO–VIEW ALUM. AWNING WINDOWS

Series/Model:	Scale:	Sheet:	Drawing No.	Rev:
ATW–400	NTS	3 of 6	444	B

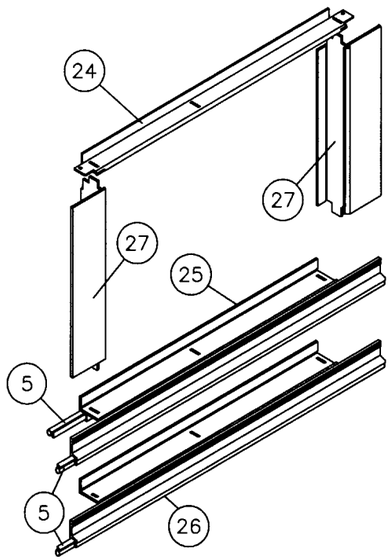

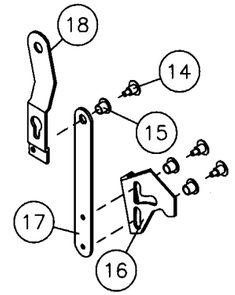

HINGE ASS'Y.

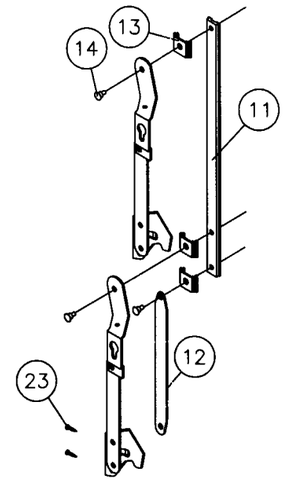

HARNESS ASS'Y.

NOTE:
ITEM #23 IS USED TO INSTALL HARNESS ASSEMBLY TO FRAME JAMB.

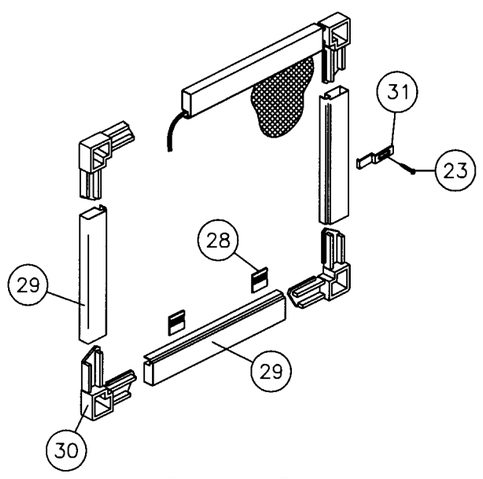

AWNING WINDOW VENT & SCREEN ASS'Y.

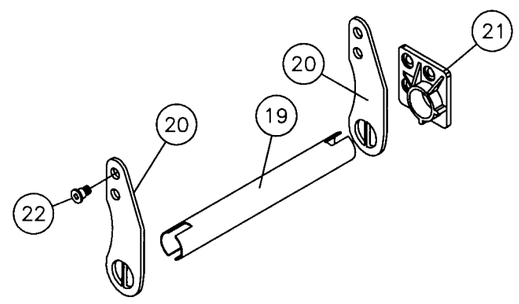

TORQUE BAR ASS'Y.

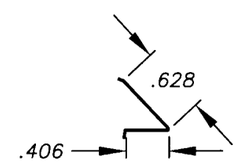

3/16 GLAZING BEAD
MAT'L: ALUM.
DWG #2719
37

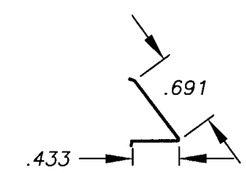

SSB/DSB GLAZING BEAD
MAT'L: ALUM.
DWG #2712
34

BILL OF MATERIAL

MK.	DESCRIPTION	DWG #	PGT #	VENDOR	VENDOR #
1	FRAME HEAD	402	66391	6063-T6	42100
2	FRAME SILL	403	66392	6063-T6	42039
3	FRAME JAMB	404	66393	6063-T6	42040
4	#8 x 3/4 QUAD PN. SMS	1177	70834	SPENCER OR =	
5	WSTP. - VINYL BULB (HEAD/VENT)	1003	66601	TEAM PLASTICS	466-1
6	WSTP. - VINYL BULB (JAMB)	1004	66606	TEAM PLASTICS	466-6
7	WSTP. - VINYL BULB (TORQUE BAR)	1005	66605	TEAM PLASTICS	466-5
8	#6 x 5/16 PH. PN. SMS		7PPBA	FASTEC	
9	OPERATOR ASSY.		7OPR	TRUTH HARDWARE	
10	#10-24 x .500 PH. PN SMS		7PPFF	FASTEC	2AW00
11	HARNESS SLIDE BAR	420	64124	6063-T5	42177
12	OPERATOR LINK	415-1	AWLONGLINK	5052 H34	X
13	SLIDE BAR GUIDE	418	42003	PGT	
14	HARNESS ASS'Y RIVET	422	7VT33M	5052/5056 H-32	625EG
15	CAM BUSHING	419	42001	PGT	
16	CAM LOCK LEFT/RIGHT	413-1	AWCAMLOCK	5052 H34	
17	VENT LINK	415-2	AWSHORTLINK	5052 H34	
18	VENT HANGER RIGHT/LEFT	412-1	AWVENTHANGER	6063-T5	
19	TORQUE BAR	416	6416M	6005-T6	45264
20	TORQUE BAR ARM	414-1	AWTORQUEARM	6063-T5	
21	TORQUE BAR BUSHING	417	42002	GLASS FILLED NYLON	
22	TORQUE BAR SHOULDER BOLT	X	X	X	
23	#10 x 1/4 PH. PN. SMS	1157	7PPBB	SPENCER OR =	
24	SASH TOP RAIL	405	642003	6063-T6	45152
25	SASH BOTTOM RAIL, UPPER SASH	406	642099	6063-T6	45150
26	SASH BOTTOM RAIL, LOWER SASH	408	642098	6063-T6	45149
27	SASH SIDE RAIL	429	642101	6063-T6	45151
28	SCREEN PULL TABS	1278	70409	ELASTOMETRIC PVC	TP-482
29	SCREEN FRAME	1014	61011	3105 H14	1011
30	SCREEN CORNER KEY	1013	41903	POLYPROPYLENE	X
31	SCREEN STRETCH CLIP	424	7VT65	6063-T5	VT-65
32	3/16" TEMPERED GLASS		X	X	X
33	DSB GLASS		X	X	X
34	DSB GLAZING BEAD	2712	65200	X	X
35	3/16" ANNEALED GLASS		X	X	X
36	GE#2801 CLEAR COLORED SILICONE				
37	3/16" GLAZING BEAD	2719	65016	X	X

PRODUCT REVISED
as complying with the Florida Building Code
Compliance No. 02-0702.08
Expiration Date DEC 20, 2006
By Ishaq I. Chauda
Miami Dade Product Control Division

APPROVED AS COMPLYING WITH THE SOUTH FLORIDA BUILDING CODE
DATE Dec 20, 2001
BY Ishaq I. Chauda
PRODUCT CONTROL DIVISION
BUILDING CODE COMPLIANCE OFFICE
ACCEPTANCE NO. 01-0712.05

NON-IMPACT WINDOWS

1.) CONFIGURATION: OX
2.) REFERENCE TEST REPORTS: FTL-3048 & FTL-3049

11/27/01
Robert L. Clark, P.E.
PE #39712
Structural

PGT INDUSTRIES
1070 TECHNOLOGY DRIVE
NOKOMIS, FL 34275
P.O. BOX 1529
NOKOMIS, FL 34274

Revsd By:	Date:	Revisions:
F.K.	10/18/01	PER LTR 10/11
F.K.	9/21/01	REDRAWN
Drawn By: F.K.	6/21/01	

Description: EXPLODED VIEWS & PARTS LIST

Title: PRO-VIEW ALUM. AWNING WINDOWS

Series/Model:	Scale:	Sheet:	Drawing No.	Rev:
ATW-400	NTS	4 of 6	444	B

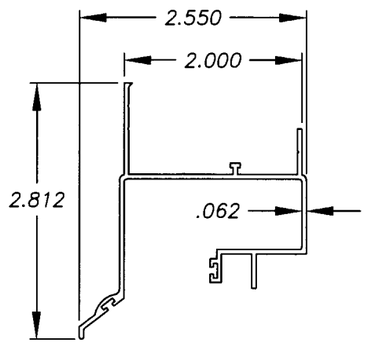

(1) FRAME HEAD
MAT'L: 6063-T6
DWG #402

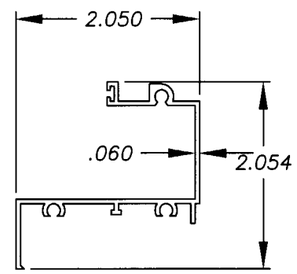

(2) FRAME SILL
MAT'L: 6063-T6
DWG #403

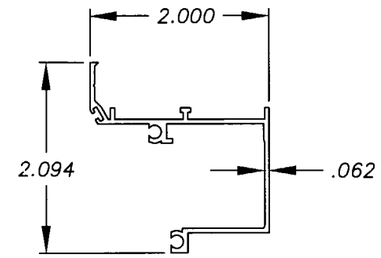

(3) FRAME JAMB
MAT'L: 6063-T6
DWG #404

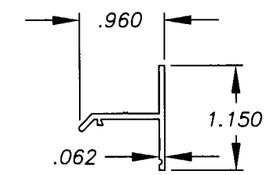

(24) SASH TOP RAIL
MAT'L: 6063-T6
DWG #405

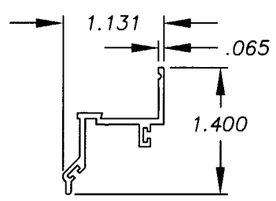

(25) SASH BOTT. RAIL
MAT'L: 6063-T6
DWG #406

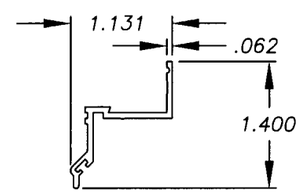

(26) BOTT. SASH BOTT. RAIL
MAT'L: 6063-T6
DWG #408

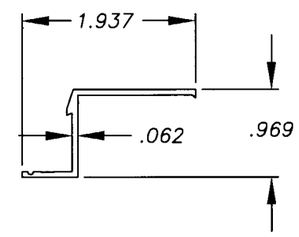

(27) SASH SIDE RAIL
MAT'L: 6063-T6
DWG #429

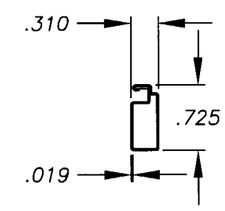

(29) SCREEN FRAME
MAT'L: 3105 H14
DWG #1014

PRODUCT REVISED
as complying with the Florida Building Code
Acceptance No. 02-0702.08
Expiration Date DEC 20, 2006
By Ishaq I. Chanda
Miami Dade Product Control Division

APPROVED AS COMPLYING WITH THE SOUTH FLORIDA BUILDING CODE
DATE DEC 20, 2001
BY Ishaq I. Chanda
PRODUCT CONTROL DIVISION
BUILDING CODE COMPLIANCE OFFICE
ACCEPTANCE NO. 01-0712.05

NON-IMPACT WINDOWS
1.) CONFIGURATION: OX
2.) REFERENCE TEST REPORTS: FTL-3048 & FTL-3049

R L Clark 11/27/01
Robert L. Clark, P.E.
PE #39712
Structural

PGT INDUSTRIES
1070 TECHNOLOGY DRIVE
NOKOMIS, FL 34275
P.O. BOX 1529
NOKOMIS, FL 34274

Revsd By:	Date:	Revisions:
F.K.	10/18/01	PER LTR 10/11
Revsd By: F.K.	Date: 9/21/01	Revisions: REDRAWN
Drawn By: F.K.	Date: 6/21/01	

Description: EXTRUSION PROFILES

Title: PRO-VIEW ALUM. AWNING WINDOWS

Series/Model:	Scale:	Sheet:	Drawing No.	Rev:
ATW-400	NTS	5 of 6	444	B

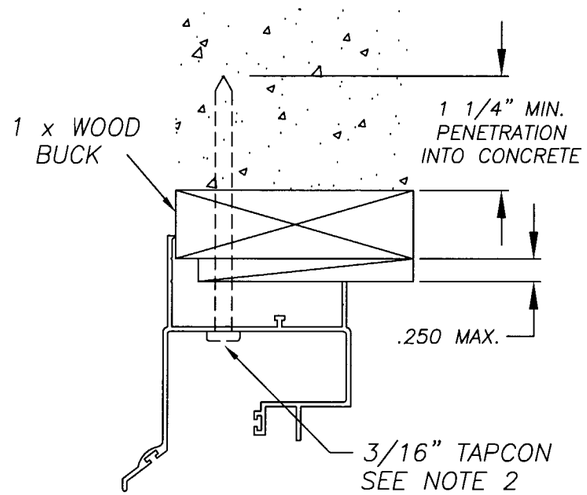

TYP. HEAD

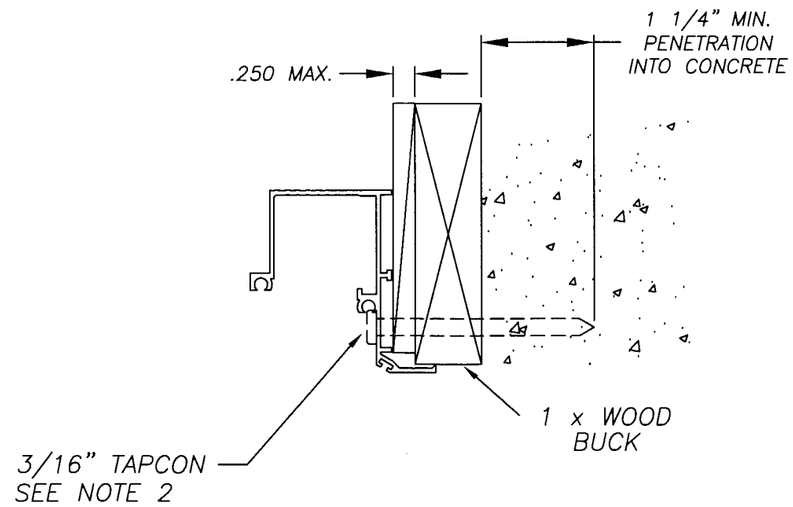

TYP. JAMB

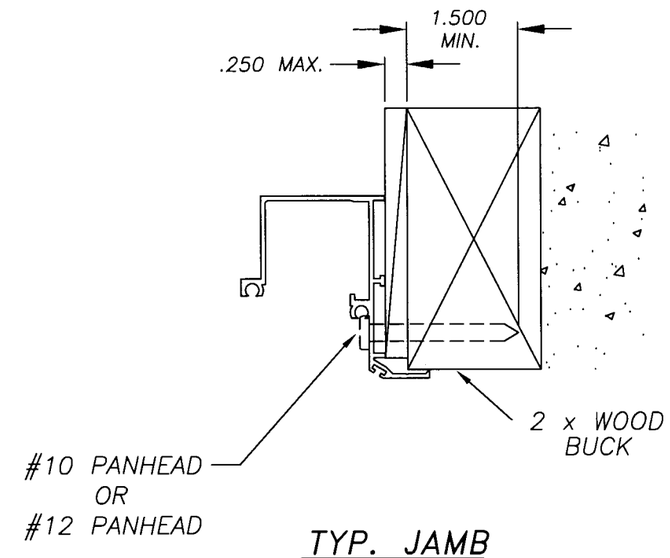

TYP. JAMB

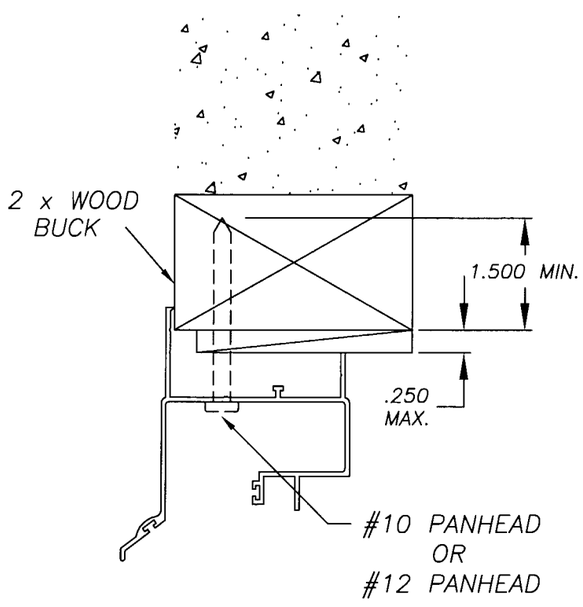

TYP. HEAD

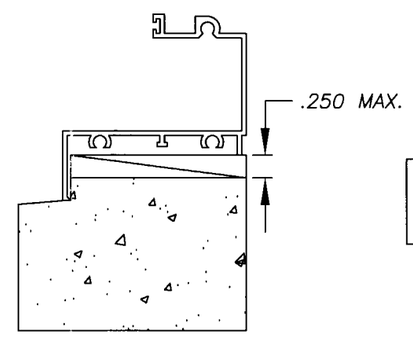

TYP. SILL

NOTE: ANCHORS NOT REQUIRED IN SILL

PRODUCT REVISED
as complying with the Florida Building Code
Acceptance No. 02-0702.08
Expiration Date DEC 20, 2006
By Ishaq I. Chanda
Miami Dade Product Control Division

APPROVED AS COMPLYING WITH THE SOUTH FLORIDA BUILDING CODE
DATE DECEMBER 20, 2001
BY Ishaq I. Chanda
PRODUCT CONTROL DIVISION
BUILDING CODE COMPLIANCE OFFICE
ACCEPTANCE NO. 01-0712.05

NON-IMPACT WINDOWS

1.) CONFIGURATION: OX
2.) USE MIAMI-DADE COUNTY APPROVED TAPCONS
3.) REFERENCE TEST REPORTS: FTL-3048 & FTL-3049

Robert L. Clark, P.E.
PE #39712
Structural

PGT INDUSTRIES
1070 TECHNOLOGY DRIVE
NOKOMIS, FL 34275
P.O. BOX 1529
NOKOMIS, FL 34274

Revsd By:	Date:	Revisions:
F.K.	10/18/01	PER LTR 10/11
Revsd By: F.K.	Date: 9/21/01	Revisions: REDRAWN
Drawn By: F.K.	Date: 6/21/01	

Description: ANCHORAGE DETAILS

Title: PRO-VIEW ALUM. AWNING WINDOWS

Series/Model:	Scale:	Sheet:	Drawing No.	Rev:
ATW-400	NTS	6 of 6	444	B