MIAMI-DADE

BUILDING CODE COMPLIANCE OFFICE (BCCO)
PRODUCT CONTROL DIVISION

MIAMI-DADE COUNTY, FLORIDA
METRO-DADE FLAGLER BUILDING
140 WEST FLAGLER STREET, SUITE 1603
MIAMI, FLORIDA 33130-1563
(305) 375-2901 FAX (305) 375-2908

NOTICE OF ACCEPTANCE (NOA)

Lawson Industries
8501 NW 90th Street
Medley, FL 33166

SCOPE:
This NOA is being issued under the applicable rules and regulations governing the use of construction materials. The documentation submitted has been reviewed by Miami-Dade County Product Control Division and accepted by the Board of Rules and Appeals (BORA) to be used in Miami Dade County and other areas where allowed by the Authority Having Jurisdiction (AHJ).

This NOA shall not be valid after the expiration date stated below. The Miami-Dade County Product Control Division (In Miami Dade County) and/or the AHJ (in areas other than Miami Dade County) reserve the right to have this product or material tested for quality assurance purposes. If this product or material fails to perform in the accepted manner, the manufacturer will incur the expense of such testing and the AHJ may immediately revoke, modify, or suspend the use of such product or material within their jurisdiction. BORA reserves the right to revoke this acceptance, if it is determined by Miami-Dade County Product Control Division that this product or material fails to meet the requirements of the applicable building code.

This product is approved as described herein, and has been designed to comply with the High Velocity Hurricane Zone of the Florida Building Code.

DESCRIPTION: Series 4000 Circle Top Aluminum Fixed Window

APPROVAL DOCUMENT: Drawing No. **W96-22**, dated 07/02/96, with revision C dated 06/26/02, titled "S-4000 Circle Top Alum. Fixed Window", sheets 1 and 2, prepared by Al-Farooq Corporation, signed and sealed by Humayoun Farooq, P.E., bearing the Miami-Dade County Product Control Approval stamp with the Notice of Acceptance number and approval date by the Miami-Dade County Product Control Division.

MISSILE IMPACT RATING: None

LABELING: Each unit shall bear a permanent label with the manufacturer's name or logo, city, state and following statement: "Miami-Dade County Product Control Approved", unless otherwise noted herein.

RENEWAL of this NOA shall be considered after a renewal application has been filed and there has been no change in the applicable building code negatively affecting the performance of this product.

TERMINATION of this NOA will occur after the expiration date or if there has been a revision or change in the materials, use, and/or manufacture of the product or process. Misuse of this NOA as an endorsement of any product, for sales, advertising or any other purposes shall automatically terminate this NOA. Failure to comply with any section of this NOA shall be cause for termination and removal of NOA.

ADVERTISEMENT: The NOA number preceded by the words Miami-Dade County, Florida, and followed by the expiration date may be displayed in advertising literature. If any portion of the NOA is displayed, then it shall be done in its entirety.

INSPECTION: A copy of this entire NOA shall be provided to the user by the manufacturer or its distributors and shall be available for inspection at the job site at the request of the Building Official.
This NOA **renews NOA # 99-0520.02** and consists of this page 1 as well as approval document mentioned above.
The submitted documentation was reviewed by **Manuel Perez, P.E.**

PRODUCT CONTROL ACCEPTED

Lawson Industries

NOTICE OF ACCEPTANCE: EVIDENCE SUBMITTED

(For File ONLY. Not part of NOA)

A. DRAWINGS

1. Manufacturer's die drawings and sections.
2. Drawing No. **W96-22**, dated 07/02/96, with revision C dated 06/26/02, titled "S-4000 Circle Top Alum. Fixed Window", sheets 1 and 2, prepared by Al-Farooq Corporation, signed and sealed by Humayoun Farooq, P.E.

B. TESTS

Tests done under previous approval (96-0418.08)

1. Test reports on 1) Air Infiltration Test, per PA 202-94
   2) Uniform Static Air Pressure Test, Loading per PA 202-94
   3) Water Resistance Test, per PA 202-94
   along with installation diagram of a "Series 4000 Aluminum Circle Top Window" fixed window prepared by Fenestration Testing Laboratory, Inc., Report No. **FTL-1062**, dated June 6, 1995, signed and sealed by Yamil Kuri, P.E.

2. Test report on : 1) Uniform Static Air Pressure Test, Loading per PA 202-94 along with installation diagram of a "Series 4000 Aluminum Circle Top Window" fixed window prepared by Fenestration Testing Laboratory, Inc., Report No. **FTL-1512**, dated October 30, 1996, signed and sealed by Gilbert Diamond, P.E.

C. CALCULATIONS

1. Comparative Analysis and Anchor Calculations, dated 12/27/95, pages 1 thru 10 of 10, updated on June 26, 2002, prepared by Al-Farooq Corporation, signed and sealed by Humayoun Farooq, P.E.
2. Comparative Analysis and Anchor Calculations, dated 07/02/96, pages 1 thru 11 of 11, updated on June 26, 2002, prepared by Al-Farooq Corporation, signed and sealed by Humayoun Farooq, P.E.

D. MATERIAL CERTIFICATIONS

1. None

E. STATEMENTS

1. Request letter for renewal of Approval No. 990520.02, prepared by Lawson Industries, Inc., signed and sealed by Nelson Erazo Sr.-Chief Engineer, dated on May 11, 1999.
2. Letter from Lawson Industries, stating that product has not changed since it was last approved, signed by Nelson Erazo Sr.-Chief Engineer, dated on May 11, 1999.

Manuel Perez

Manuel Perez, P.E.
Product Control Examiner
NOA No 02-0702.11
Expiration Date: August 14, 2007
Approval Date: August 22, 2002

NOTICE OF ACCEPTANCE: EVIDENCE SUBMITTED

(For File ONLY. Not part of NOA)

3. Engineering Practice Letter Statement, prepared by Lawson Industries, dated May 11, 1999, signed by Nelson Erazo Sr.-Chief Engineer
4. No Financial Statement letter issued by Al-Farooq Co., dated on May 8, 1999, signed and sealed by H. Farooq, P.E.
5. Letter of Compliance issued by Al-Farooq Co., dated on May 8, 1999, signed and sealed by H. Farooq, P.E.

F. OTHER

1. This file renews NOA No. **99-0520.02**, issued on 07/29/99 and expiring on 08/14/02.
2. Tests performed under original approval (#96-1021.01):

TEST	TEST LOADS	DESIGN LOADS
AIR INFILTRATION @ 1.57 PSF SFBC PA 202-94 (0.15 CFM/FT^2)	0.14CFM/FT^2 FTL-1062	----------
UNIFORM STATIC PRESSURE (DESIGN LOAD) SFBC PA 202-94 POSITIVE 3/16" annealed glass	+76.0 PSF FTL-1062	+76.0 PSF FTL-1062
UNIFORM STATIC PRESSURE (DESIGN LOAD) SFBC PA 202-94 NEGATIVE 3/16" annealed glass	-76.0 PSF FTL-1062	-76.0 PSF FTL-1062
WATER RESISTANCE (PSF) SFBC 202-94	+14.0 PSF FTL-1062	+93.33 PSF FTL-1062
UNIFORM STATIC PRESSURE (FULL TEST LOAD) SFBC PA 202-94 POSITIVE	+114.0 PSF FTL-1062	+76.0 PSF FTL-1062
UNIFORM STATIC PRESSURE (FULL TEST LOAD) SFBC PA 202-94 NEGATIVE	-114.0 PSF FTL-1062	-76.0 PSF FTL-1062
FORCED-ENTRY RESISTANCE (FER) SFBC 3603.2(b)(5)	N.R.	----------
Design Pressure Rating (Positive)		**+76.0 PSF**
Design Pressure Rating (Negative)		**-76.0 PSF**
For Design Pressure Rating vs. Window Size, see "Design Load Capacity" Table in Dwg. No. W69-22.		

TEST	RESULTS	DESIGN LOADS
UNIFORM STATIC PRESSURE (DESIGN LOAD) SFBC PA 202-94 POSITIVE 1/4" tempered glass	+76.0 PSF FTL-1512	+76.0 PSF FTL-1512
UNIFORM STATIC PRESSURE (DESIGN LOAD) SFBC PA 202-94 NEGATIVE 1/4" tempered glass	-76.0 PSF FTL-1512	-76.0 PSF FTL-1512
UNIFORM STATIC PRESSURE (FULL TEST LOAD) SFBC PA 202-94 POSITIVE	+114.0 PSF FTL-1512	+76.0 PSF FTL-1512
UNIFORM STATIC PRESSURE (FULL TEST LOAD) SFBC PA 202-94 NEGATIVE	-114.0 PSF FTL-1512	-76.0 PSF FTL-1512
Design Pressure Rating (Positive)		**+76.0 PSF**
Design Pressure Rating (Negative)		**-76.0 PSF**
For Design Pressure Rating vs. Window Size, see "Design Load Capacity" Table in Dwg. No. W69-22.		

Manuel Perez

Manuel Perez, P.E.
Product Control Examiner
NOA No 02-0702.11
Expiration Date: August 14, 2007
Approval Date: August 22, 2002

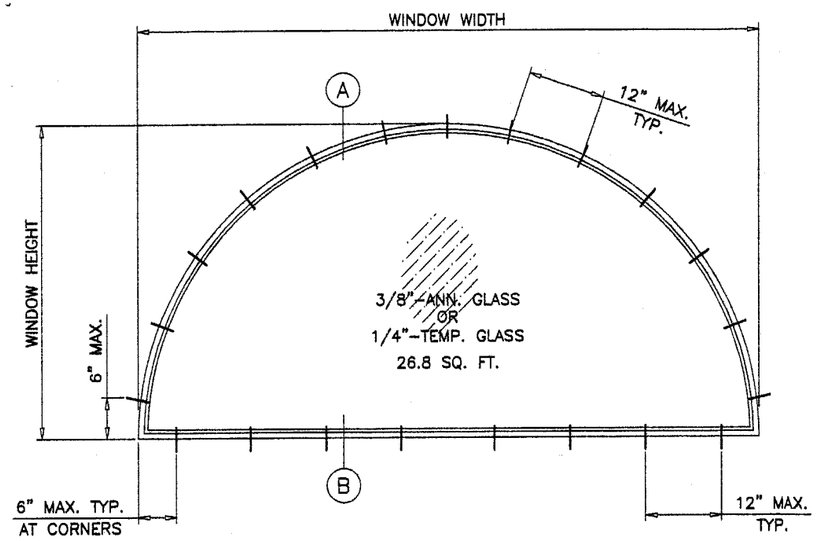

TYPICAL ELEVATION

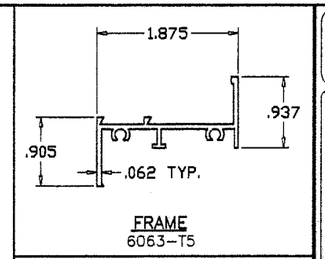

FRAME
6063-T5

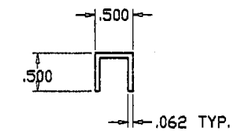

GLAZING CHANNEL
6063-T5

DESIGN LOAD CAPACITY - PSF					
WINDOW DIMS.		3/8" ANN. GLASS		1/4" TEMP. GLASS	
WIDTH	HEIGHT	EXT. (+)	INT. (-)	EXT. (+)	INT. (-)
37"	18-1/2"	93.3	167.0	93.3	197.2
48"	24"	93.3	151.0	93.3	151.0
53-1/8"	26-9/16"	93.3	137.3	93.3	137.3
60"	30"	93.3	120.8	93.3	120.8
74"	37"	89.9	89.9	93.3	98.6
84"	42"	65.6	65.6	86.9	86.3
96"	48"	49.0	49.0	76.0	75.5

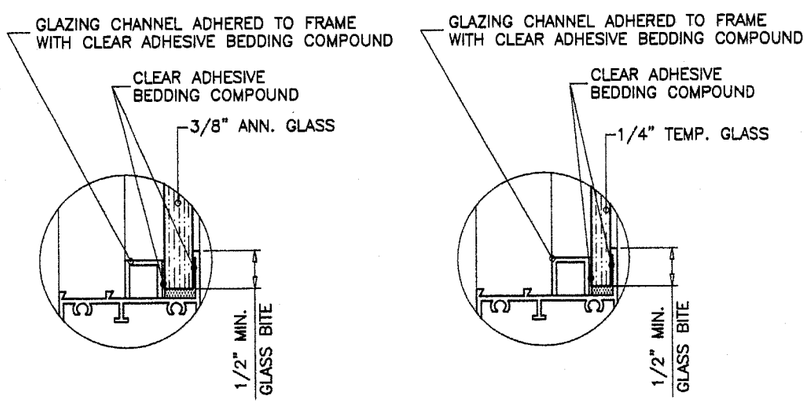

GLASS OPTIONS

NOTES:

1. THIS PRODUCT IS DESIGNED TO COMPLY WITH THE HIGH VELOCITY HURRICANE ZONE OF THE 2001 FLORIDA BUILDING CODE.
   ALSO FOR WIND LOADS AS PER ASCE 7 USING CORRESPONDING LOADS.
2. WOOD BUCKS BY OTHERS, MUST BE ANCHORED PROPERLY TO TRANSFER LOADS TO THE STRUCTURE.
3. ANCHORS SHALL BE AS LISTED, SPACED AS SHOWN ON DETAILS. ANCHOR EMBEDMENT TO BASE MATERIAL SHALL BE BEYOND WALL DRESSING OR STUCCO.

WINDOWS TO BE PROTECTED WITH DADE COUNTY APPROVED IMPACT RESISTANT SHUTTERS

Engr: DR. HUMAYOUN FAROOQ
STRUCTURES
FLA. PE # 16557

JUN 27 2002

Approved as complying with the Florida Bulding Code
Date AUG. 22, 2002
NOA# 02-0702.11
Miami Dade Product Control Division
By Manuel Perez

AL-FAROOQ CORPORATION
ENGINEERS, PLANNERS & PRODUCT DESIGN
1235 SW 87 AVE
MIAMI, FLORIDA 33174
TEL. (305) 264-8100 FAX. (305) 262-6978

COMP-ANL\W96-22LI-NEW

S-4000 CIRCLE TOP ALUM. FIXED WINDOW

LAWSON INDUSTRIES
8501 N.W. 90TH STREET
MEDLEY, FL. 33160
TEL. (305) 696-8660 FAX (305) 696-6006

revisions:

no	date	by	description
A	10.17.96	H	GLASS REVISED
B	05.07.99	H	GENERAL REVISION
C	06.26.02	H	UPDATED FOR FBC, CO. AD. CH.

date: 07-02-96
scale: 1/2" = 1"
dr. by: HAMID
chk. by:

drawing no.
W96-22

sheet 1 of 2

WOOD BUCKS NOT BY LAWSON IND., MUST SUSTAIN LOADS IMPOSED BY GLAZING SYSTEM AND TRANSFER THEM TO THE BUILDING STRUCTURE.

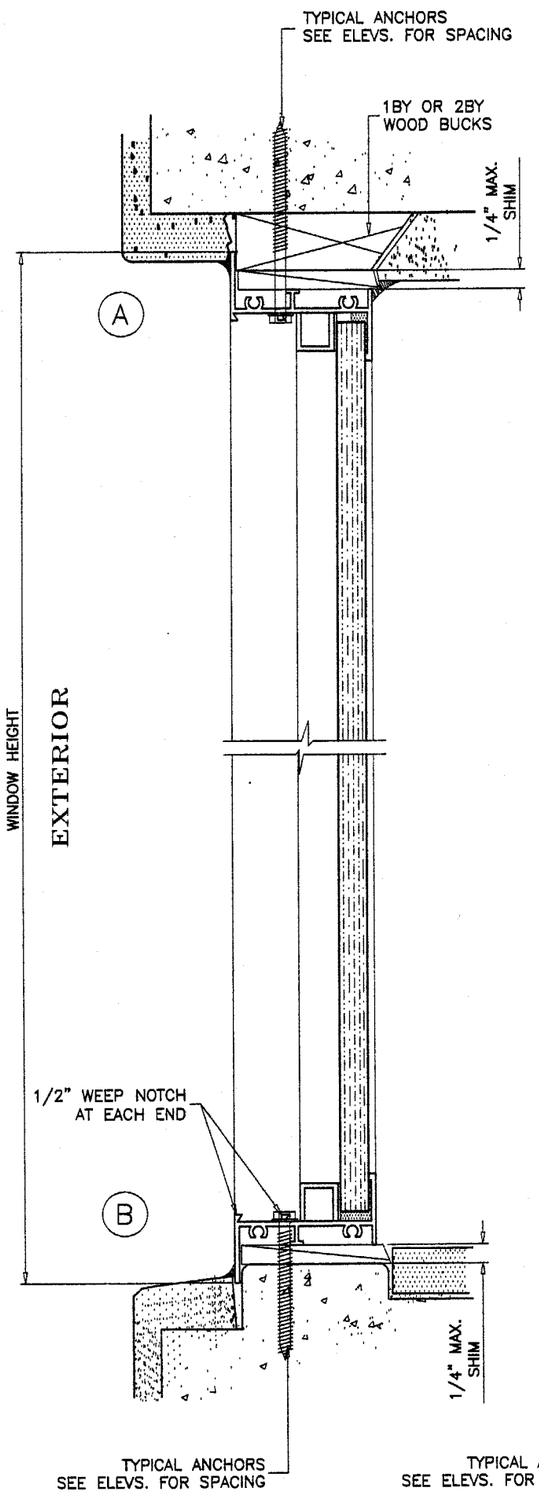

TYPICAL ANCHORS:

3/16 DIA. TAPCONS

INTO 2BY WOOD BUCKS OR WOOD STRUCTURE
1-3/8" MIN. PENETRATION INTO WOOD

THRU 1BY WOOD BUCKS INTO MASONRY OR DIRECTLY INTO MASONRY
1-1/4" MIN. EMBED INTO CONC. OR MASONRY

SEALANT:

FRAME CORNERS, PERIMETER OF GLAZING BEAD AND INSTALLATION SCREWS SEALED WITH CLEAR OR ALUMINUM COLORED SEALANT.

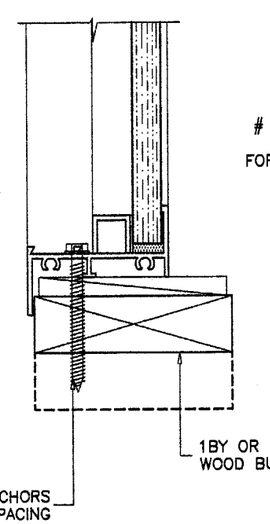

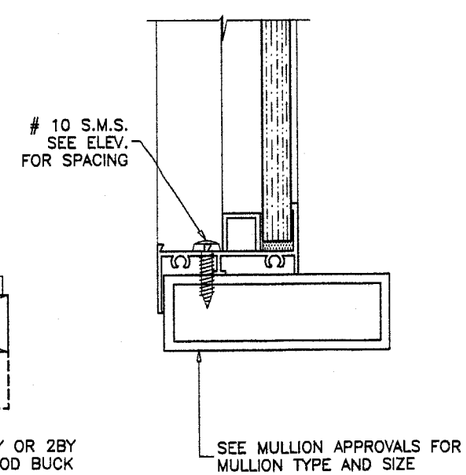

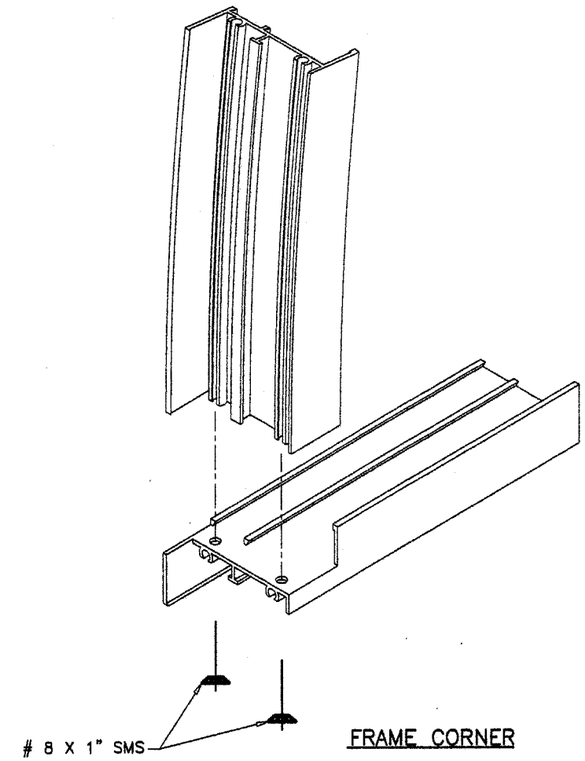

Engr: DR. HUMAYOUN FAROOQ
STRUCTURES
FLA. PE # 16557

JUN 2 7 2002

Approved as complying with the Florida Building Code
Date AUG. 22, 2002
NOA# 02-0702.11
Miami Dade Product Control Division
By

AL-FAROOQ CORPORATION
ENGINEERS, PLANNERS & PRODUCT DESIGN
1235 SW 87 AVE
MIAMI, FLORIDA 33174
TEL. (305) 264-8100 FAX. (305) 262-6978
COMP-ANL\W96-22LI-NEW

S-4000 CIRCLE TOP ALUM. FIXED WINDOW

LAWSON INDUSTRIES
8501 N.W. 90TH STREET
MEDLEY, FL. 33160
TEL. (305) 696-8660 FAX (305) 696-6006

revisions:

no	date	by	description

date: 07-02-96
scale: 1/2" = 1"
dr. by: HAMID
chk. by:

drawing no.
W96-22

sheet 2 of 2