MIAMI-DADE

BUILDING CODE COMPLIANCE OFFICE (BCCO)
PRODUCT CONTROL DIVISION

MIAMI-DADE COUNTY, FLORIDA
METRO-DADE FLAGLER BUILDING
140 WEST FLAGLER STREET, SUITE 1603
MIAMI, FLORIDA 33130-1563
(305) 375-2901 FAX (305) 375-2908

NOTICE OF ACCEPTANCE (NOA)

QMI Roll Shutter.
933 N. Oaklawn Ave.
Elmhurst, IL 60126

SCOPE:
This NOA is being issued under the applicable rules and regulations governing the use of construction materials. The documentation submitted has been reviewed by Miami-Dade County Product Control Division and accepted by the Board of Rules and Appeals (BORA) to be used in Miami Dade County and other areas where allowed by the Authority Having Jurisdiction (AHJ).

This NOA shall not be valid after the expiration date stated below. The Miami-Dade County Product Control Division (In Miami Dade County) and/or the AHJ (in areas other than Miami Dade County) reserve the right to have this product or material tested for quality assurance purposes. If this product or material fails to perform in the accepted manner, the manufacturer will incur the expense of such testing and the AHJ may immediately revoke, modify, or suspend the use of such product or material within their jurisdiction. BORA reserves the right to revoke this acceptance, if it is determined by Miami-Dade County Product Control Division that this product or material fails to meet the requirements of the applicable building code.

This product is approved as described herein, and has been designed to comply with the High Velocity Hurricane Zone of the Florida Building Code.

DESCRIPTION: Extruded Aluminum Roll Up Shutter

APPROVAL DOCUMENT: Drawing No. 02-362, titled "40mm Roll-Up Shutter", sheets 1 through 15 of 15, including 6A & 11A, prepared by Tilteco, Inc. dated 06/24/02 with last revision on 12/03/02, signed and sealed by W. A. Tillit Jr, P E, bearing the Miami-Dade County Product Control Revision stamp with the Notice of Acceptance number and Expiration date by the Miami-Dade County Product Control Division.

MISSILE IMPACT RATING: Large and Small Missile Impact

LABELING: Each unit shall bear a permanent label with the manufacturer's name or logo, city, state and following statement: "Miami-Dade County Product Control Approved", unless otherwise noted herein.

RENEWAL of this NOA shall be considered after a renewal application has been filed and there has been no change in the applicable building code negatively affecting the performance of this product.

TERMINATION of this NOA will occur after the expiration date or if there has been a revision or change in the materials, use, and/or manufacture of the product or process. Misuse of this NOA as an endorsement of any product, for sales, advertising or any other purposes shall automatically terminate this NOA. Failure to comply with any section of this NOA shall be cause for termination and removal of NOA.

ADVERTISEMENT: The NOA number preceded by the words Miami-Dade County, Florida, and followed by the expiration date may be displayed in advertising literature. If any portion of the NOA is displayed, then it shall be done in its entirety.

INSPECTION: A copy of this entire NOA shall be provided to the user by the manufacturer or its distributors and shall be available for inspection at the job site at the request of the Building Official.
This revises NOA No. 00-1013.03and consists of this page 1 as well as approval document mentioned above.
The submitted documentation was reviewed by **Candido F. Font, P.E.**

QMI Roll Shutter.

NOTICE OF ACCEPTANCE: EVIDENCE SUBMITTED
(For File ONLY. Not part of NOA)

A. DRAWINGS

1. Drawing No. 02-362, prepared by Al Farooq Corporation titled "40 mm Roll-Up Shutter", dated 06/24/02 with last revision on 12/03/02, sheets 1 through 15 of 15, including 6A & 11A, signed and sealed by W.A. Tillit Jr, PE.

B. TESTS

1. Test report on Large Missile Impact Test per PA 201-94, Cyclic Wind Pressure Test per PA 203-94 and Uniform Static Air Pressure Test per PA 202-94 of 40 of Aluminum Roll-Up Shutter prepared by Fenestration Testing Laboratory Inc, report No. 2697, dated 07/31/00, signed and sealed by A. P. Gonzalez, PE.
2. Test report on Uniform Static Air Pressure Test per PA 202, of 40 mm. Aluminum Roll Up Shutter System, prepared by Fenestration Testing Laboratory, Inc., report No. 2754, dated 08/18/00, signed and sealed by A. P. Gonzalez, PE
3. Test report on Large Missile Impact Test per PA 201, of Aluminum Mullions and Aluminum Storm Bars, prepared by Fenestration Testing Laboratory, Inc, report No. 2699, dated 08/18/00, signed and sealed by A. P. Gonzalez, PE.
4. Test report on Cyclic Wind Pressure Test per PA 203, of 40 mm Aluminum Roll Up Shutter System, prepared by Fenestration Testing Laboratory, Inc, report No. 2754, dated 08/25/00, signed and sealed by A. P. Gonzalez, PE.

C. CALCULATIONS

1. Comparative analysis for slats, storm bars, headers, tracks, mullions and anchors using rational analysis dated page 1 through 125 of 125, prepared by W. A. Tillit Jr PE on 01/27/00.
2. Revision to calculations of 40 mm. Slat Roll Up Shutter, prepared by W. A. Tillit Jr PE on 07/02/02.

D. MATERIAL CERTIFICATIONS

1. Tensile Test of Flat Reduced Section, prepared by ATC Associates, Report No. 13974.0001, dated 08/22/00, signed and sealed by S. E. Black, PE.

E. STATEMENTS

1. Letter of Compliance issued by Tilteco, Inc, on 09/28/00, signed and sealed by W. A. Tillit Jr PE
2. Leer of No Financial issued by Tilteco, Inc. dated 09/28/00 signed and sealed by W. Tillit PE.
3. Letter of Testing Compliance issued by Fenestration Testing Laboratory, Inc on 08/21/00, signed and sealed by A. P. Gonzalez PE.

Candido F. Font, P.E.
Senior Product Control Examiner
NOA No 02-0726.03
Expiration Date: November 8, 2006
Approval Date: February 6, 2003

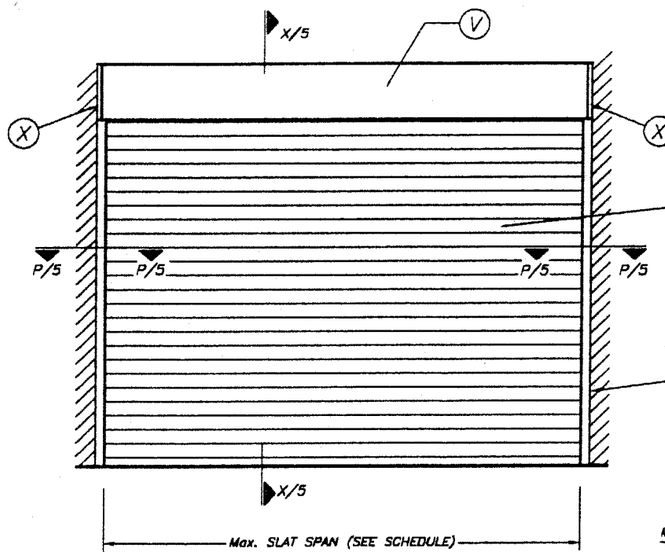

TYPICAL SINGLE UNIT ELEVATION (NO STORM BARS REQUIRED)

NOTE: SEE SHEET 2 , 3 & 4 OF 15 FOR COMPONENTS NOMENCLATURE.

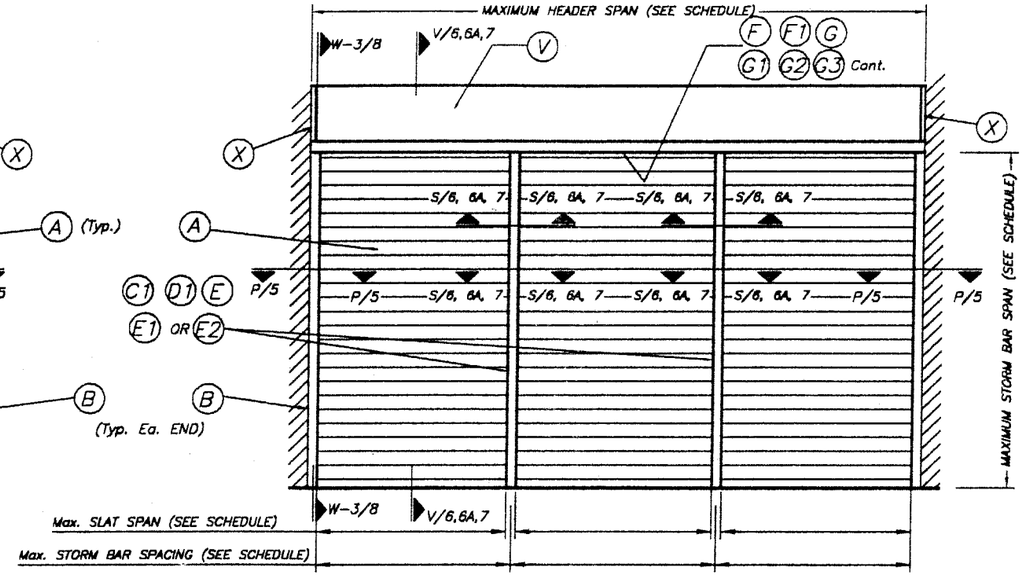

TYPICAL MULTIPLE UNIT ELEVATION (STORM BARS REQUIRED)

NOTE: SEE SHEET 2 , 3 & 4 OF 15 FOR COMPONENTS NOMENCLATURE.

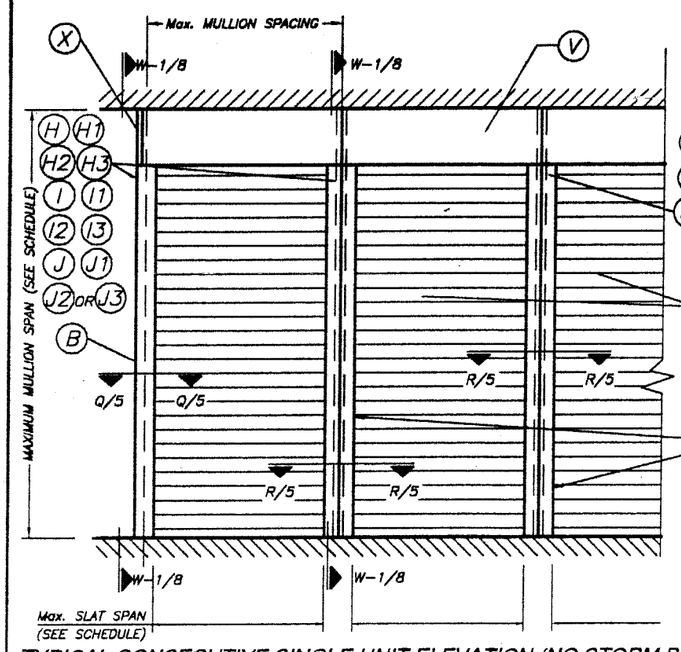

TYPICAL CONSECUTIVE SINGLE UNIT ELEVATION (NO STORM BARS REQUIRED)

NOTE: SEE SHEET 2 , 3 & 4 OF 15 FOR COMPONENTS NOMENCLATURE.

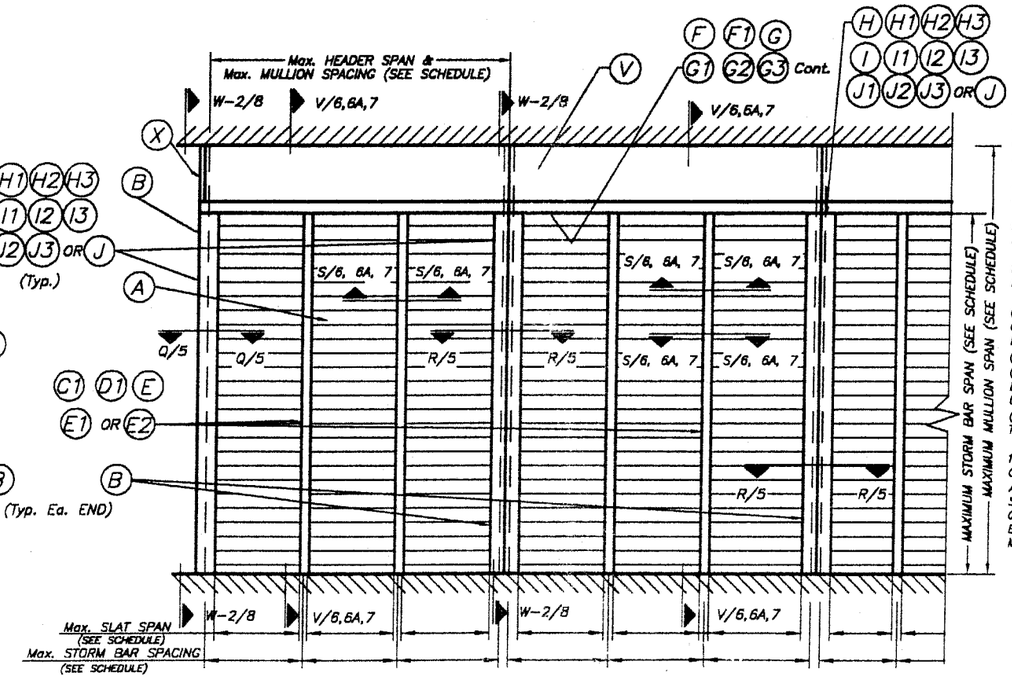

TYPICAL CONSECUTIVE MULTIPLE UNIT ELEVATION (STORM BARS REQUIRED)

NOTE: SEE SHEET 2 , 3 & 4 OF 15 FOR COMPONENTS NOMENCLATURE.

GENERAL NOTES:

1. ROLL-UP SHUTTER SHOWN ON THIS PRODUCT EVALUATION DOCUMENT (P. A. D.) HAS BEEN DESIGNED IN ACCORDANCE WITH THE 2001 EDITION OF THE FLORIDA BUILDING CODE.
DESIGN WIND LOADS SHALL BE DETERMINED AS PER SECTION 1619 OF THE ABOVE MENTIONED CODE, FOR A BASIC WIND SPEED of 146 m.p.h., IN ACCORDANCE W/ ASCE 7-98 STANDARD.
ROLL-UP SHUTTER'S ADEQUACY FOR IMPACT AND FATIGUE RESISTANCE HAS BEEN VERIFIED IN ACCORDANCE WITH SECTION 1606.1.4 OF THE ABOVE MENTIONED CODE AS PER FENESTRATION TESTING LAB REPORTS # 2697, 2754 & 2899.

2. ALL ALUMINUM EXTRUSIONS SHALL BE 6005-T5 ALLOY (UNLESS OTHERWISE NOTED).

3. ALL SCREWS TO BE STAINLESS STEEL 304 OR 316 SERIES W/50 ksi YIELD POINT AND 90 ksi TENSILE STRENGTH OR CORROSION RESISTANT COATED CARBON STEEL AS PER DIN 50018.

4. BOLTS TO BE 2024-T4 ALUMINUM ALLOY, GALVANIZED OR STAINLESS STEEL WITH 36 ksi MINIMUM YIELD POINT.

5. STORM BARS AT FLOOR OR CEILING MOUNTING INSTALLATIONS MAY BE REMOVABLE AT NON HURRICANE CONDITIONS. HOWEVER, EACH STORM BAR SHALL BEAR A PERMANENT LABEL IN A VISIBLE PLACE WITH A WARNING NOTE INSTRUCTING THE TENANT OR OWNER THAT STORM BARS MUST BE INSTALLED WITH CORRESPONDING HARDWARE DURING PERIODS OF HURRICANE WARNING AND THAT ROLL UP SHUTTERS WILL NOT OFFER HURRICANE PROTECTION UNLESS ALL STORM BARS ARE INSTALLED AS DIRECTED.

6. REMOVABLE STORM BARS SHALL BE STORED IN A CONSPICUOUS PLACE WITH EASY AND IMMEDIATE ACCESS SO THAT THEY CAN BE REACHED AND INSTALLED ANY TIME (HURRICANE CONDITIONS OR NOT) SLATS ARE ROLLED DOWN. THE EFFECT OF THE SLATS ROLLED DOWN WITHOUT STORM BARS IS; THOSE SLATS WILL SLIP OUT OF TRACK DUE TO THE DEFLECTION CAUSED BY WIND FORCES.

7. ANCHORS TO WALL FOR SIDE RAILS & BOX CONNECTION SHALL BE AS FOLLOWS: (UNLESS OTHERWISE NOTED)
(A) TO EXISTING POURED CONCRETE : MIN. 3000 p.s.i. COMPRESSIVE STRENGTH.
-1/4" ø TAPCON ANCHORS AS MANUFACTURED BY I.T.W./BUILDEX OR ELCO TEXTRON.
NOTES:
A.1) MINIMUM EMBEDMENT OF TAPCON ANCHORS INTO POURED CONCRETE SHALL BE 1 3/4", NO EMBEDMENT INTO STUCCO SHALL BE CONSIDERED AS PART OF THE REQUIRED EMBEDMENT.
A.2) IN CASE THAT PRECAST STONE, PRECAST CONCRETE PANELS, OR PAVERS BE FOUND ON THE EXISTING WALL OR FLOOR, ANCHORS SHALL BE LONG ENOUGH TO REACH THE MAIN STRUCTURE BEHIND SUCH PANELS.
(B) TO EXISTING CONCRETE BLOCK WALL:
-1/4" ø TAPCON ANCHORS, AS MANUFACTURED BY I.T.W./BUILDEX OR ELCO TEXTRON NOTES: B.1) MINIMUM EMBEDMENT OF TAPCON ANCHORS, INTO THE CONCRETE BLOCK UNIT SHALL BE 1 1/4".
(B.2) IN CASE THAT PRECAST STONE OR PRECAST CONCRETE PANELS BE FOUND ON THE EXISTING WALL, ANCHORS SHALL BE LONG ENOUGH TO REACH THE MAIN STRUCTURE BEHIND SUCH PANELS.
(C) ANCHORS REQUIRED FOR STORM BARS, HEADERS & MULLION CONNECTIONS SHALL BE AS SPECIFIED ON APPLICABLE SECTIONS SHOWN ON SHEETS 6, 6A, 7 & 8 OF 15 RESPECTIVELY. POWER BOLTS & CALK-IN ANCHORS TO BE AS MANUFACTURED BY POWERS FASTENING, INC. & TAPCON ANCHORS AS MANUFACTURED BY I.T.W./BUILDEX OR ELCO TEXTRON, MINIMUM EDGE DISTANCE AND SPACING FOR ABOVE MENTIONED ANCHORS SHALL BE AS INDICATED BELOW OR AS SHOWN ON CORRESPONDING DETAILS FOR EACH SHUTTER COMPONENT INSTALLATION IN THIS DRAWING, WHICHEVER IS LARGER (MORE CRITICAL).

ANCHOR	SPACING	EDGE DISTANCE
1/4"ø TAPCON	3"	3"
1/4"ø CALK-IN	2 1/2"	3"
3/8"ø CALK-IN	3 3/4"	4 1/2"
1/2"ø CALK-IN	5"	6"
3/8"ø POWER BOLT	3 3/4"	4 1/2"
5/8"ø POWER BOLT	6 1/4"	7 1/2"*

(D) ANCHORS SHALL BE INSTALLED FOLLOWING ALL OF THE RECOMMENDATIONS AND SPECIFICATIONS OF THE ANCHOR'S MANUFACTURER.

8. IT SHALL BE THE RESPONSIBILITY OF THE CONTRACTOR TO VERIFY THE SOUNDNESS OF THE STRUCTURE WHERE SHUTTER IS TO BE ATTACHED TO INSURE PROPER ANCHORAGE.

9. ROLL-UP MECHANISM NOT PART OF THIS APPROVAL, BUT SHALL BE CERTIFIED BY AN INDEPENDENT TESTING AGENCY.

10. (a) THIS PRODUCT APPROVAL DOCUMENT (P. A. D.) PREPARED BY THIS ENGINEER IS GENERIC AND DOES NOT PROVIDE INFORMATION FOR A SITE SPECIFIC PROJECT; I. e. WHERE THE SITE CONDITIONS DEVIATE FROM THE P. A. D.

(b) CONTRACTOR TO BE RESPONSIBLE FOR THE SELECTION, PURCHASE AND INSTALLATION OF THIS PRODUCT BASED ON THIS PRODUCT EVALUATION PROVIDED HE/SHE DOES NOT DEVIATE FROM THE CONDITIONS DETAILED ON THIS DOCUMENT.
(c) THIS PRODUCT EVALUATION DOCUMENT WILL BE CONSIDERED INVALID IF ALTERED BY ANY MEANS.
(d) SITE SPECIFIC PROJECTS SHALL BE PREPARED BY A FLORIDA REGISTERED ENGINEER OR ARCHITECT WHICH WILL BECOME THE ENGINEER OF RECORD (E.O.R.) FOR THE PROJECT AND WHO WILL BE RESPONSIBLE FOR THE PROPER USE OF THE P.A.D.
(e) THIS P.A.D. SHALL COMPLY WITH SECTION 2:61G15 OF THE FLORIDA ADMINISTRATIVE CODE.

11 SHUTTER MANUFACTURER'S STAMP SHALL BE PLACED ON THE EXPOSED SURFACE OF THE SIDE RAIL APPROXIMATELY 4" ABOVE THE BOTTOM OF SUCH RAIL.
STAMP SHALL READ AS FOLLOWS:
QMI ROLL SHUTTER
ELMHURST, IL.
MIAMI-DADE COUNTY PRODUCT CONTROL APPROVED.

PRODUCT REVISED
as complying with the Florida Building Code
Acceptance No 02-0726.03
Expiration Date 11/8/06
By
Miami Dade Product Control Division

MIAMI-DADE COUNTY

12/6/02

TILTECO INC.
TILLIT TESTING & ENGINEERING COMPANY
6595 N.W. 36th. St., Ste. 217, VIRGINIA GARDENS, FLORIDA 33166
Phone : (305)871-1530 . Fax : (305)871-1531
EB-0006719
WALTER A. TILLIT Jr., P. E.
FLORIDA Lic. # 44167

40 mm ROLL-UP SHUTTER

QMI ROLL SHUTTER
933 N. OAKLAWN AVE.
ELMHURST, IL. 60126

REV. NO	DESCRIPTION	DATE	REV. No	DESCRIPTION	DATE
1	OLD DWG No. 00-228	6/24/02	3	-	-
2	GENERAL	12/3/02	4	-	-

AS SHOWN
SCALE
6/24/02
DATE
02-362
DRAWING No
SHEET 1 OF 15

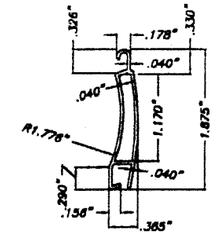

(A) TYPE 1 SLAT
6005-T5 Alum. ALLOY
SCALE: 1/2" = 1"

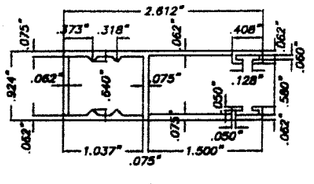

(B) TYPE 1 WALL MOUNT TRACK
6063-T6 Alum. ALLOY
SCALE: 1/2" = 1"

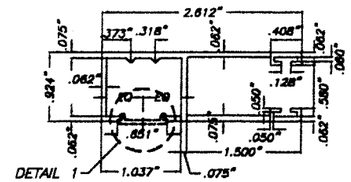

(B) TYPE 1 WALL MOUNT TRACK ALTERNATIVE
6063-T6 Alum. ALLOY
SCALE: 1/2" = 1"

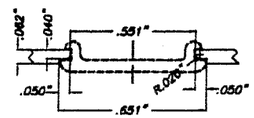

DETAIL 1
SCALE: 1 1/2" = 1"

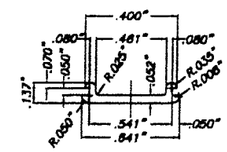

(B1) SLIDING CAP
SCALE: 1" = 1"

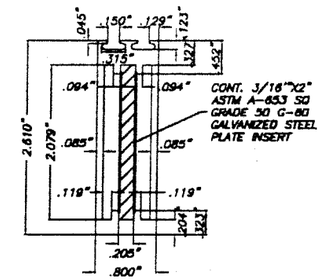

(C1) TYPE 1 STORM BAR
QMI-93
INSERT
6005-T5 Alum. ALLOY
SCALE: 1/2" = 1"

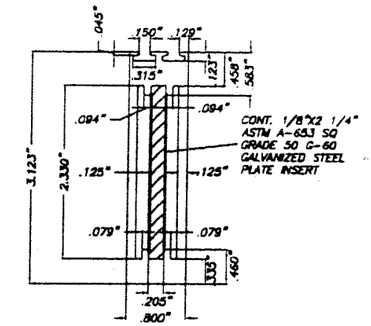

(D1) TYPE 2 STORM BAR
QMI-86
INSERT
6005-T5 Alum. ALLOY
SCALE: 1/2" = 1"

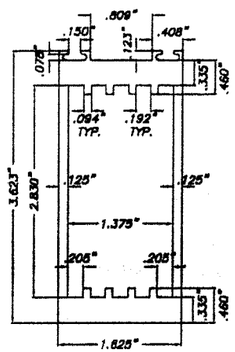

(E) TYPE 3 STORM BAR
QMI-87
6005-T5 Alum. ALLOY
SCALE: 1/2" = 1"

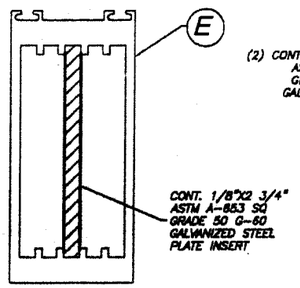

(E1) TYPE 4 STORM BAR
QMI-87
INSERT
6005-T5 Alum. ALLOY
SCALE: 1/2" = 1"

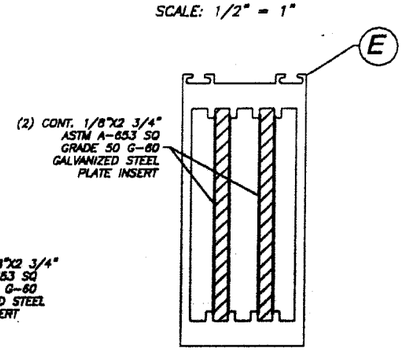

(E2) TYPE 5 STORM BAR
QMI-87
2 INSERTS
6005-T5 Alum. ALLOY
SCALE: 1/2" = 1"

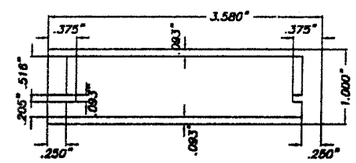

(F) TYPE 1 HEADER
QMI-88
6005-T5 Alum. ALLOY
SCALE: 1/2" = 1"

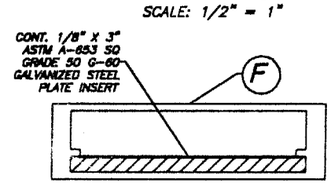

(F1) TYPE 2 HEADER
QMI-88
INSERT
6005-T5 Alum. ALLOY
SCALE: 1/2" = 1"

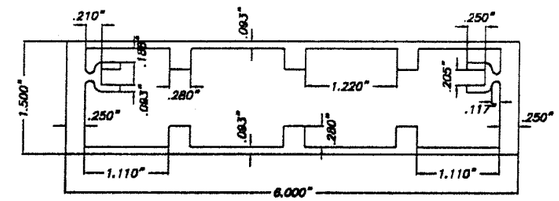

(G) TYPE 3 HEADER
QMI-89
6005-T5 Alum. ALLOY
SCALE: 1/2" = 1"

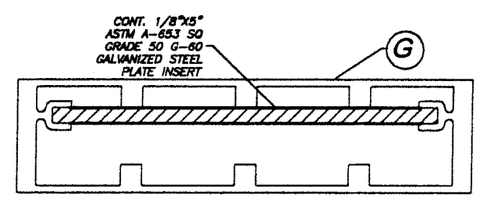

(G1) TYPE 4 HEADER
QMI-89
INSERT
6005-T5 Alum. ALLOY
SCALE: 1/2" = 1"

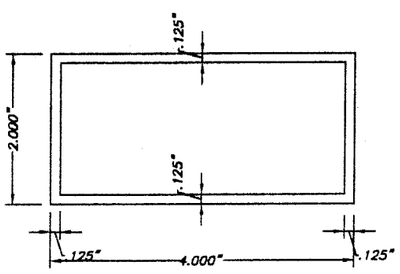

(G2) TYPE 5 HEADER
6063-T6 ALUMINUM ALLOY
SCALE: 1/2" = 1"

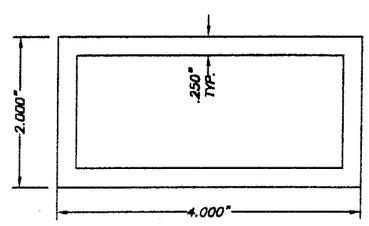

(G3) TYPE 6 HEADER
6063-T6 ALUMINUM ALLOY
SCALE: 1/2" = 1"

PRODUCT REVISED
as complying with the Florida Building Code
Acceptance No. 02-0726.03
Expiration Date 1/08/06
By
Miami Dade Product Control Division

MIAMI-DADE COUNTY

12/6/02

TILTECO INC.
TILLIT TESTING & ENGINEERING COMPANY
6595 N.W. 36th. St., Ste. 217, VIRGINIA GARDENS, FLORIDA 33166
Phone : (305)871-1530 . Fax : (305)871-1531
EB-0006719
WALTER A. TILLIT Jr., P. E.
FLORIDA Lic. # 44167

40 mm ROLL-UP SHUTTER

QMI ROLL SHUTTER
933 N. OAKLAWN AVE.
ELMHURST, IL. 60126

REV. NO	DESCRIPTION	DATE	REV. No	DESCRIPTION	DATE
1	OLD DWG No. 00-228	6/24/02	3	-	-
2	GENERAL	12/3/02	4	-	-

AS SHOWN
SCALE

6/24/02
DATE

02-362
DRAWING No

SHEET 2 OF 15

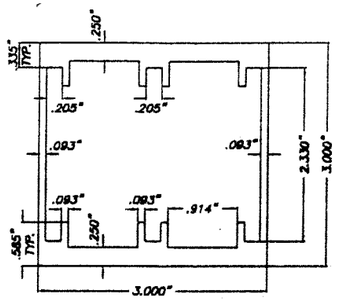

(H) TYPE 1 MULLION

QMI-90
6005-T5 Alum. ALLOY
SCALE: 1/2" = 1"

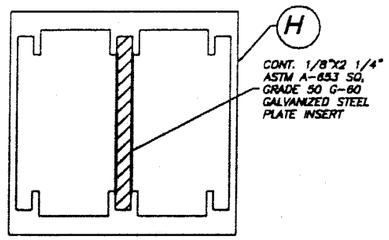

(H1) TYPE 2 MULLION

QMI-90
INSERT
6005-T5 Alum. ALLOY
SCALE: 1/2" = 1"

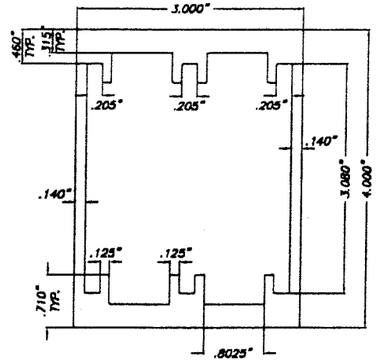

(I) TYPE 5 MULLION

QMI-91
6005-T5 Alum. ALLOY
SCALE: 1/2" = 1"

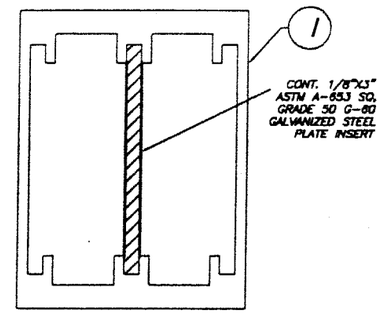

(I1) TYPE 6 MULLION

QMI-91
INSERT
6005-T5 Alum. ALLOY
SCALE: 1/2" = 1"

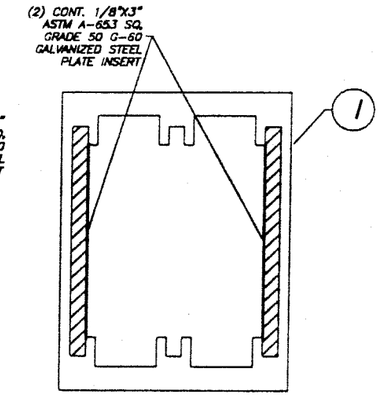

(I2) TYPE 7 MULLION

QMI-91
INSERT
6005-T5 Alum. ALLOY
SCALE: 1/2" = 1"

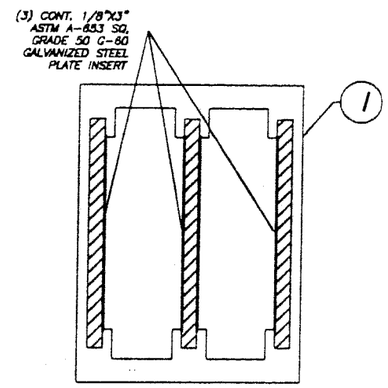

(I3) TYPE 8 MULLION

QMI-91
INSERT
6005-T5 Alum. ALLOY
SCALE: 1/2" = 1"

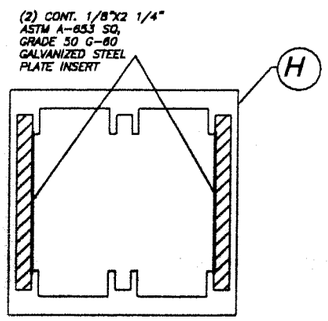

(H2) TYPE 3 MULLION

QMI-90
INSERT
6005-T5 Alum. ALLOY
SCALE: 1/2" = 1"

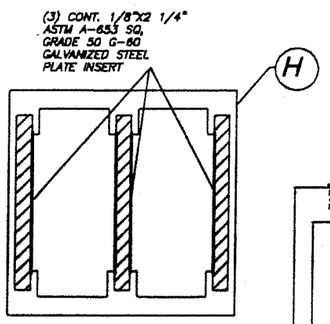

(H3) TYPE 4 MULLION

QMI-90
INSERT
6005-T5 Alum. ALLOY
SCALE: 1/2" = 1"

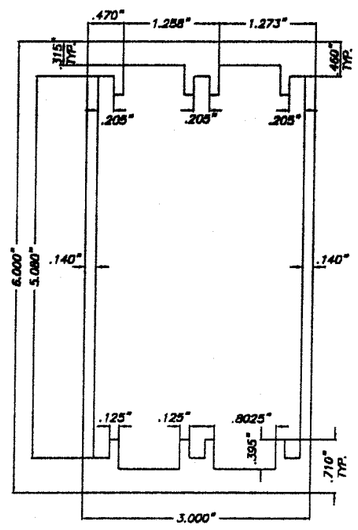

(J) TYPE 9 MULLION

QMI-92
6005-T5 Alum. ALLOY
SCALE: 1/2" = 1"

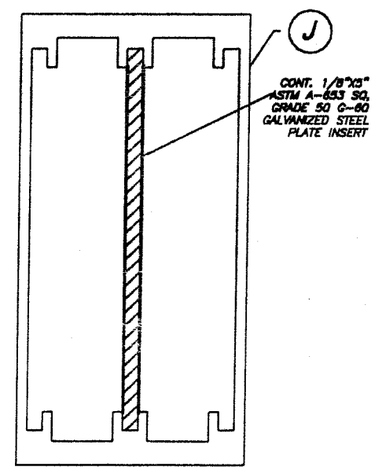

(J1) TYPE 10 MULLION

QMI-92
INSERT
6005-T5 Alum. ALLOY
SCALE: 1/2" = 1"

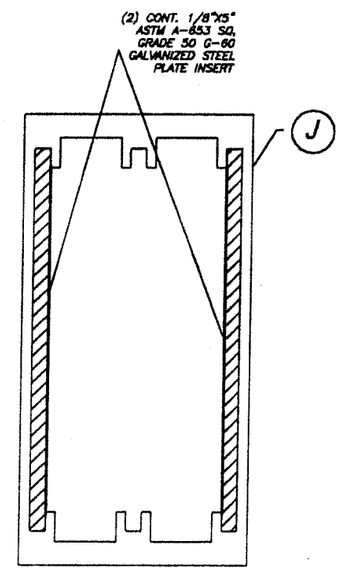

(J2) TYPE 11 MULLION

QMI-92
INSERT
6005-T5 Alum. ALLOY
SCALE: 1/2" = 1"

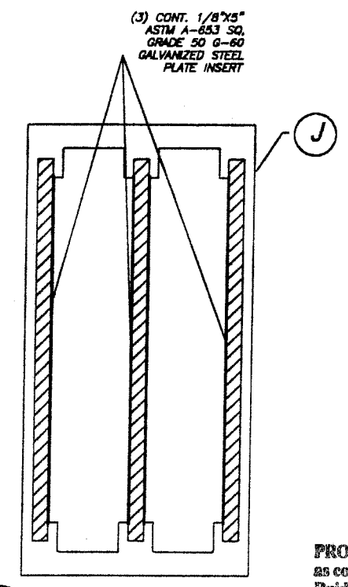

(J3) TYPE 12 MULLION

QMI-92
INSERT
6005-T5 Alum. ALLOY
SCALE: 1/2" = 1"

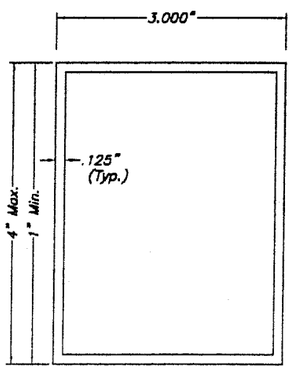

(K) BUILD-OUT TUBES

3"x EXTRUDED TUBE
6063-T5 ALUMINUM ALLOY
SCALE: 1/2" = 1"

PRODUCT REVISED
as complying with the Florida Building Code
Acceptance No 02-0726.03
Expiration Date 11/08/06
By
Miami Dade Product Control Division

MIAMI-DADE COUNTY

12/6/02

TILTECO INC.
TILLIT TESTING & ENGINEERING COMPANY
6595 N.W. 36th. St., Ste. 217, VIRGINIA GARDENS, FLORIDA 33166
Phone : (305)871-1530 . Fax : (305)871-1531
EB-0006719
WALTER A. TILLIT Jr., P. E.
FLORIDA Lic. # 44167

40 mm ROLL-UP SHUTTER

QMI ROLL SHUTTER
933 N. OAKLAWN AVE.
ELMHURST, IL. 60126

REV. NO	DESCRIPTION	DATE	REV. No	DESCRIPTION	DATE
1	OLD DWG No. 00-228	6/24/02	3	-	-
2	GENERAL	12/3/02	4	-	-

AS SHOWN
SCALE

6/24/02
DATE

02-362
DRAWING No

SHEET 3 OF 15

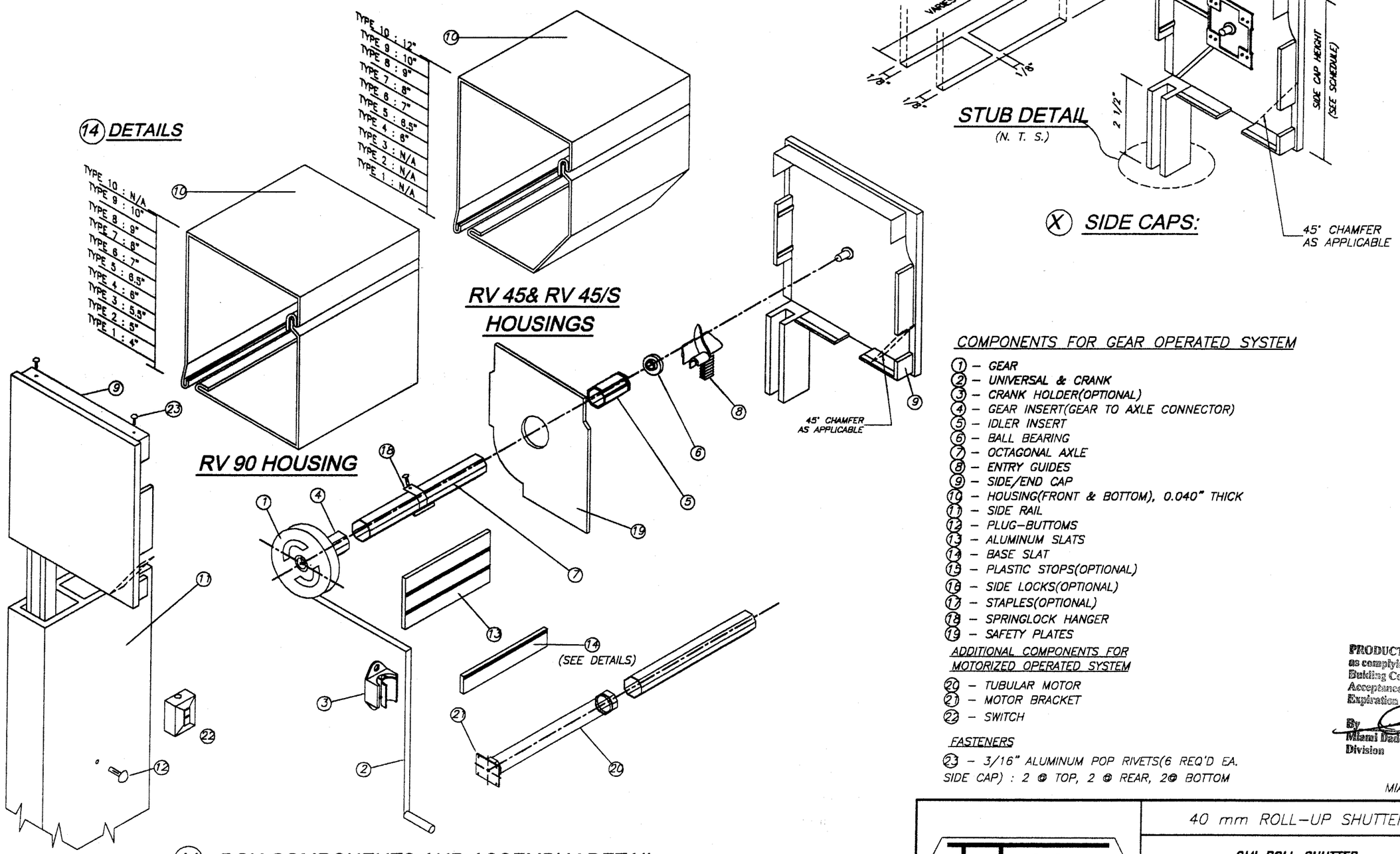

COMPONENTS FOR GEAR OPERATED SYSTEM

1. – GEAR
2. – UNIVERSAL & CRANK
3. – CRANK HOLDER(OPTIONAL)
4. – GEAR INSERT(GEAR TO AXLE CONNECTOR)
5. – IDLER INSERT
6. – BALL BEARING
7. – OCTAGONAL AXLE
8. – ENTRY GUIDES
9. – SIDE/END CAP
10. – HOUSING(FRONT & BOTTOM), 0.040" THICK
11. – SIDE RAIL
12. – PLUG–BUTTOMS
13. – ALUMINUM SLATS
14. – BASE SLAT
15. – PLASTIC STOPS(OPTIONAL)
16. – SIDE LOCKS(OPTIONAL)
17. – STAPLES(OPTIONAL)
18. – SPRINGLOCK HANGER
19. – SAFETY PLATES

ADDITIONAL COMPONENTS FOR MOTORIZED OPERATED SYSTEM

20. – TUBULAR MOTOR
21. – MOTOR BRACKET
22. – SWITCH

FASTENERS

23. – 3/16" ALUMINUM POP RIVETS(6 REQ'D EA. SIDE CAP) : 2 @ TOP, 2 @ REAR, 2@ BOTTOM

PRODUCT REVISED
as complying with the Florida Building Code
Acceptance No 02-0726.03
Expiration Date 11/08/06
By
Miami Dade Product Control Division

MIAMI–DADE COUNTY

12/6/02

TILTECO INC.
TILLIT TESTING & ENGINEERING COMPANY
6595 N.W. 36th. St., Ste. 217, VIRGINIA GARDENS, FLORIDA 33166
Phone : (305)871–1530 . Fax : (305)871–1531
EB–0006719
WALTER A. TILLIT Jr., P. E.
FLORIDA Lic. # 44167

40 mm ROLL–UP SHUTTER

QMI ROLL SHUTTER
933 N. OAKLAWN AVE.
ELMHURST, IL. 60126

REV. NO	DESCRIPTION	DATE	REV. No	DESCRIPTION	DATE
1	OLD DWG No. 00–228	6/24/02	3	–	–
2	GENERAL	12/3/02	4	–	–

AS SHOWN
SCALE

6/24/02
DATE

02–362
DRAWING No

SHEET 4 OF 15

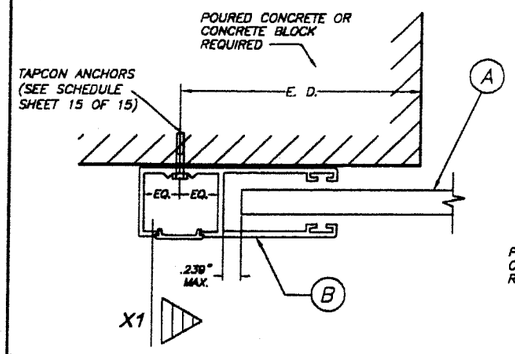

SECTION P - P (1) : WALL MOUNT

SCALE: FULL

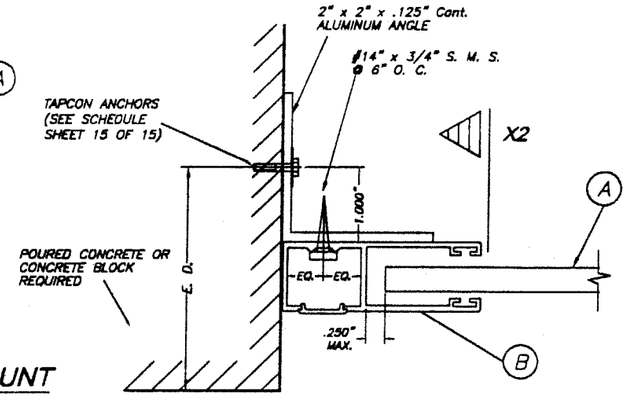

SECTION P - P (2) : SIDE WALL MOUNT

SCALE: 1/2" = 1"

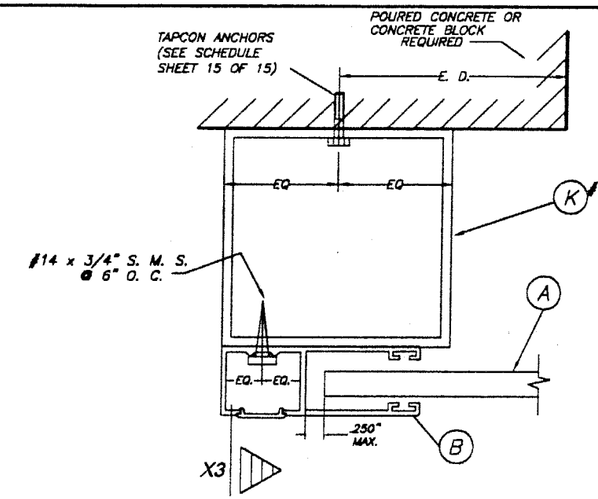

SECTION P - P (3) : BUILD-OUT

SCALE: 1/2" = 1"

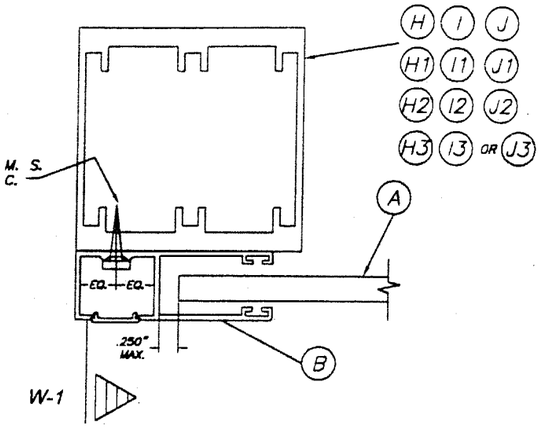

SECTION Q - Q : MULLION MOUNT

SCALE: 1/2" = 1"

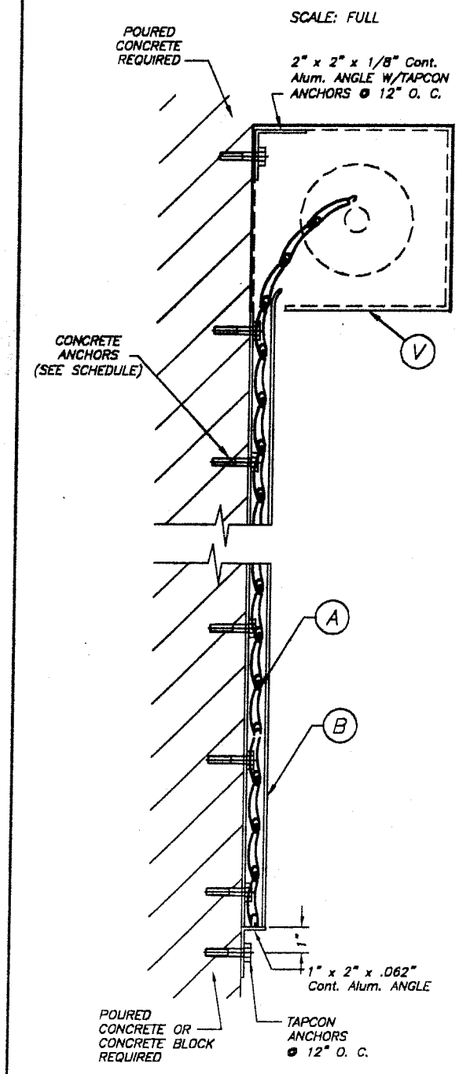

SECTION X - X (1)

N. T. S.

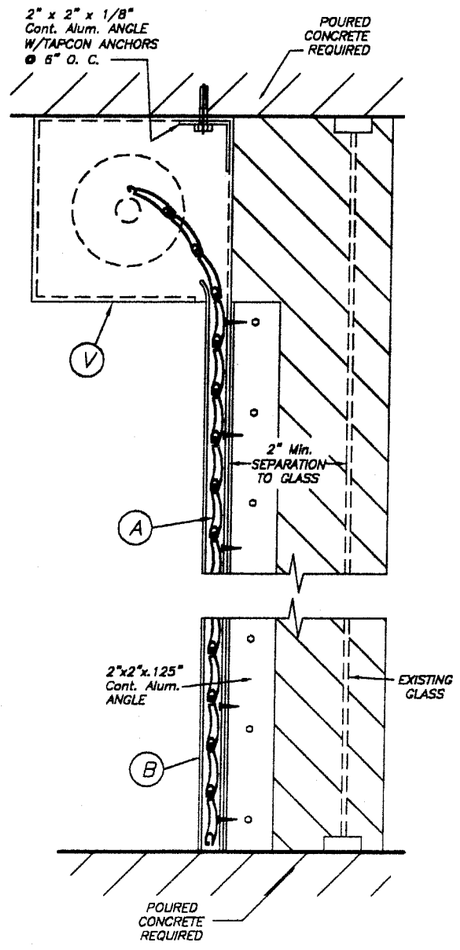

SECTION X -X (2)

N. T. S.

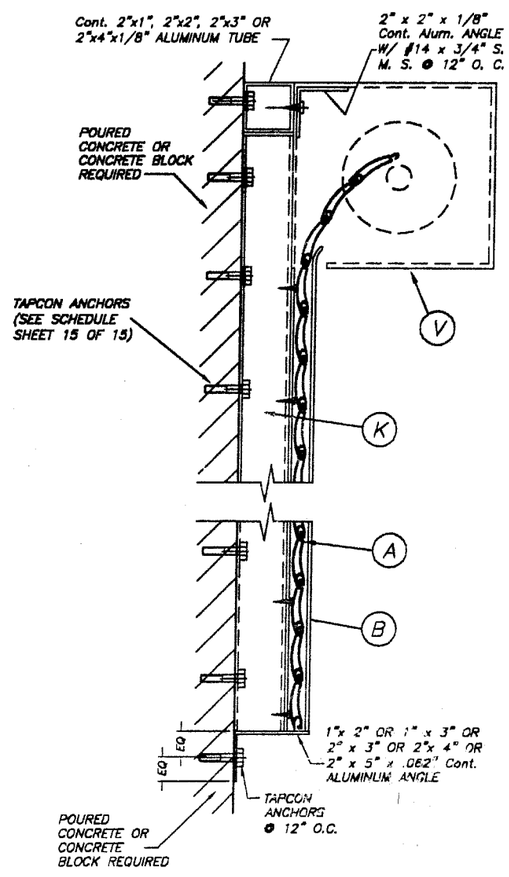

SECTION X - X (3)

N. T. S.

7/6/02

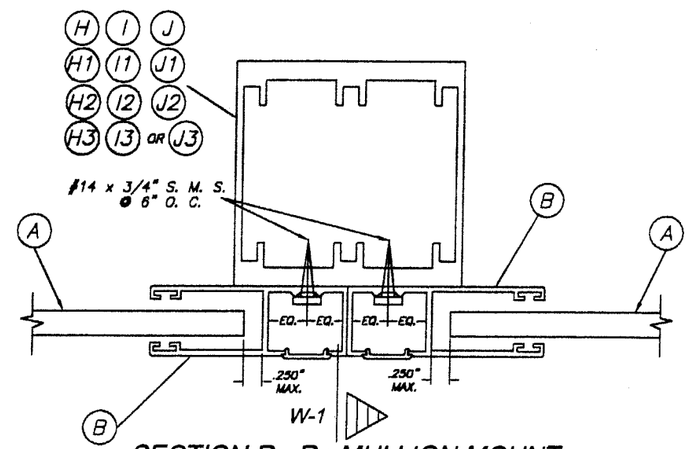

SECTION R - R : MULLION MOUNT

SCALE: 1/2" = 1"

PRODUCT REVISED
as complying with the Florida Building Code
Acceptance No 02-0726.03
Expiration Date 11/08/06
By:
Miami Dade Product Control Division

MIAMI-DADE COUNTY

TILLECO INC.
TILLIT TESTING & ENGINEERING COMPANY
6595 N.W. 36th. St., Ste. 217, VIRGINIA GARDENS, FLORIDA 33166
Phone : (305)871-1530 . Fax : (305)871-1531
EB-0006719
WALTER A. TILLIT Jr., P. E.
FLORIDA Lic. # 44167

40 mm ROLL-UP SHUTTER

QMI ROLL SHUTTER
933 N. OAKLAWN AVE.
ELMHURST, IL 60126

REV. NO	DESCRIPTION	DATE	REV. No	DESCRIPTION	DATE
1	OLD DWG No. 00-228	6/24/02	3	-	-
2	GENERAL	12/3/02	4	-	-

AS SHOWN
SCALE

6/24/02
DATE

02-362
DRAWING No

SHEET 5 OF 15

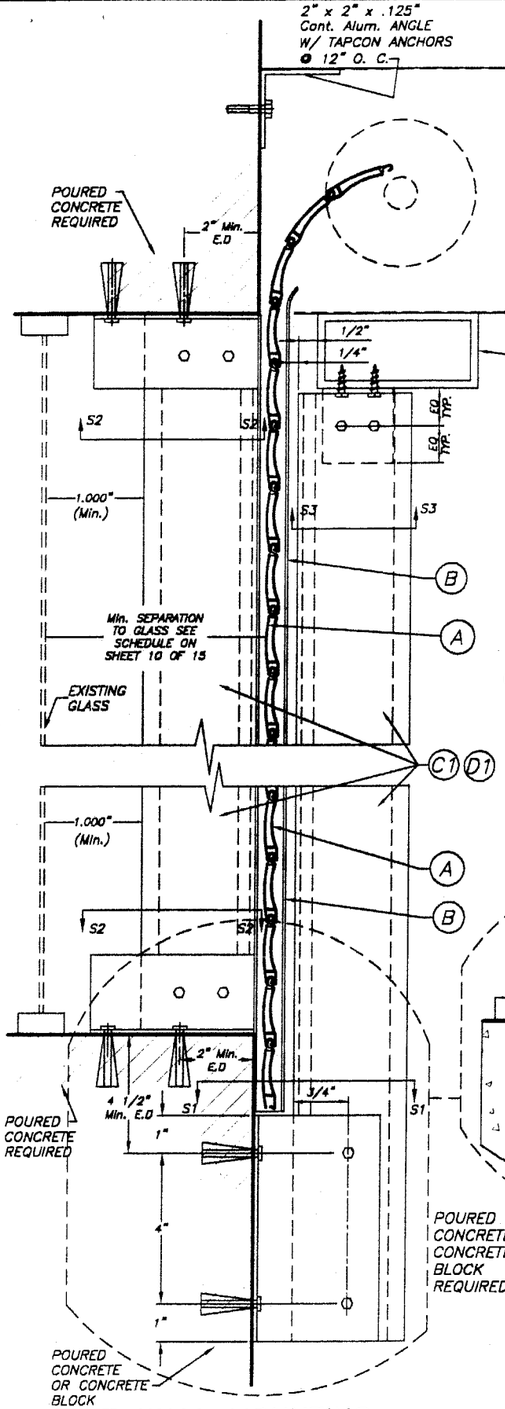

WALL MOUNTING : SECTION V–V(1)

SCALE : 1/4" = 1"

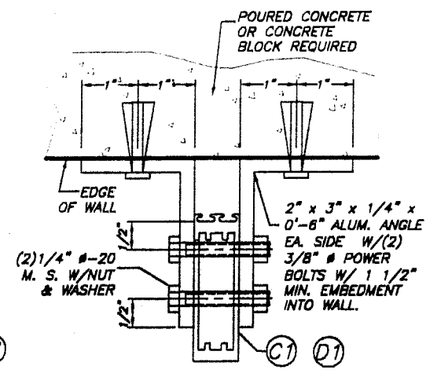

SECTION S1 – S1

SCALE : 3/8" = 1"

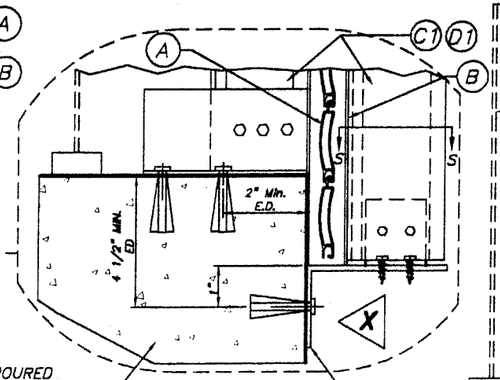

OPTIONAL FRONT STORM BAR CONNECTION

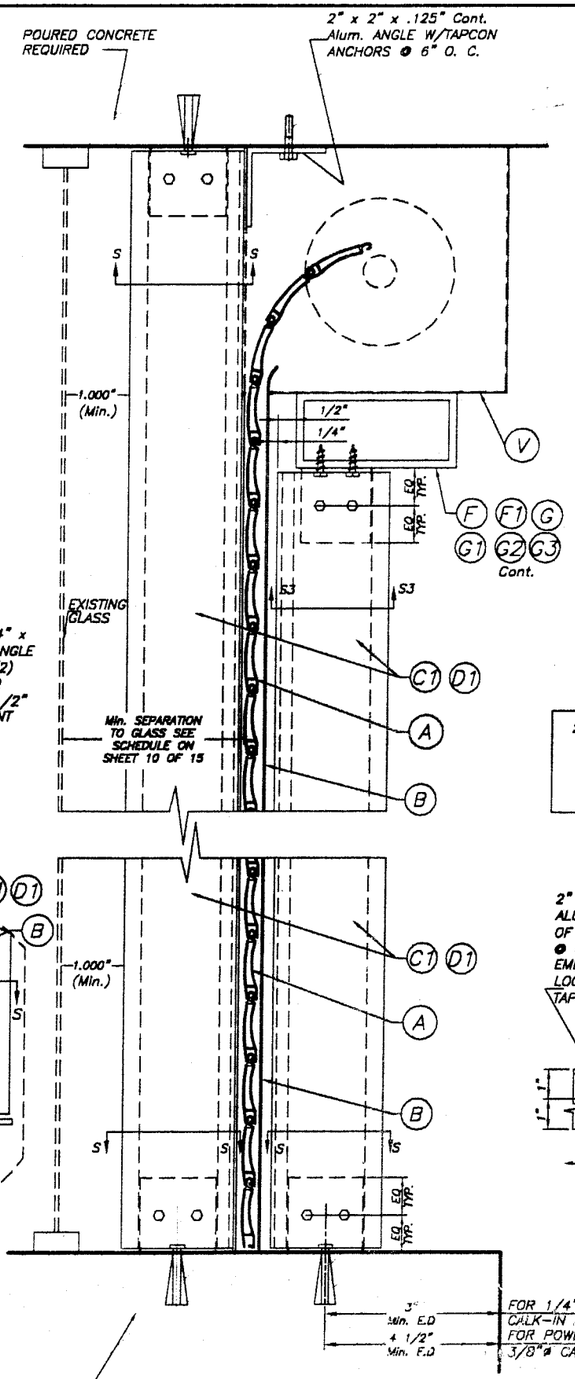

CEILING & FLOOR MOUNTING : SECTION V–V(2)

SCALE : 1/4" = 1"

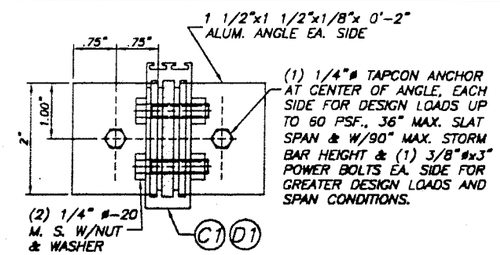

SECTION S – S (FOR FIXED STORM BAR)

SCALE : 3/8" = 1"

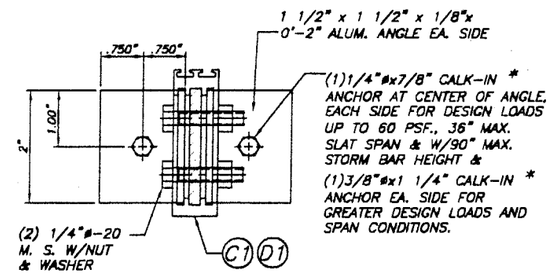

SECTION S – S (FOR REMOVABLE STORM BAR)

SCALE : 3/8" = 1"

* 1/4" ø-20 OR 3/8" ø-16 MACHINE SCREWS USED JOINTLY W/ 1/4" ø x 7/8" OR 3/8" ø x 1 1/4" CALK-IN ANCHORS RESPECTIVELY SHALL BE LEFT TOGETHER W/ ANCHORS AT THE TIME STORM BARS ARE REMOVED. (SEE DETAIL A)

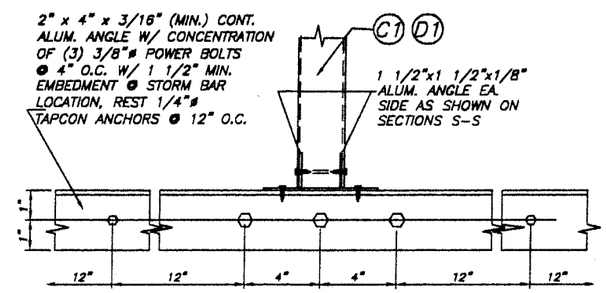

ELEVATION X

SCALE : 1/8" = 1"

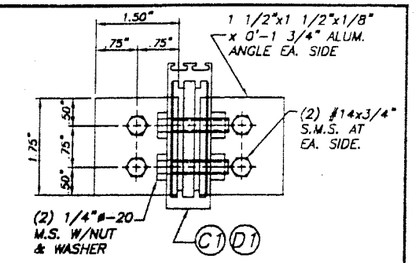

SECTION S3 – S3 (HEADER CONNECTION)

SCALE : 3/8" = 1"

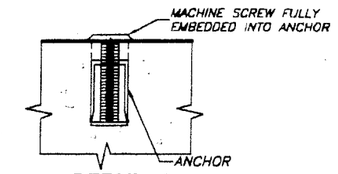

DETAIL A

SCALE : 1/2" = 1"

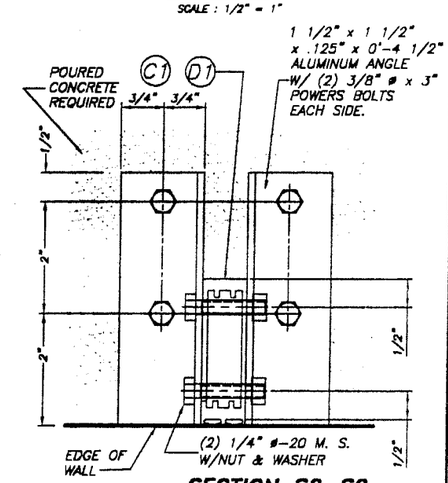

SECTION S2–S2

SCALE : 3/8" = 1"

NOTE:
SINGLE SPAN SECTIONS AND DETAILS ARE SIMILAR TO ABOVE SHOWN WITHOUT STORM BAR & HEADERS.

PRODUCT REVISED
as complying with the Florida Building Code
Acceptance No. 02-0726.03
Expiration Date 11/08/06
By
Miami Dade Product Control Division

MIAMI–DADE COUNTY

TILTECO INC.
TILLIT TESTING & ENGINEERING COMPANY
6595 N.W. 36th. St., Sts. 217, VIRGINIA GARDENS, FLORIDA 33166
Phone : (305)871-1530 . Fax : (305)871-1531
EB-0006719
WALTER A. TILLIT Jr., P. E.
FLORIDA Lic. # 44167

7/6/02

40 mm ROLL-UP SHUTTER

QMI ROLL SHUTTER
933 N. OAKLAWN AVE.
ELMHURST, IL. 60126

REV. NO	DESCRIPTION	DATE	REV. No	DESCRIPTION	DATE
1	OLD DWG No. 00-228	6/24/02	3	–	–
2	GENERAL	12/3/02	4	–	–

AS SHOWN SCALE
6/24/02 DATE
02-362 DRAWING No
SHEET 6 OF 15

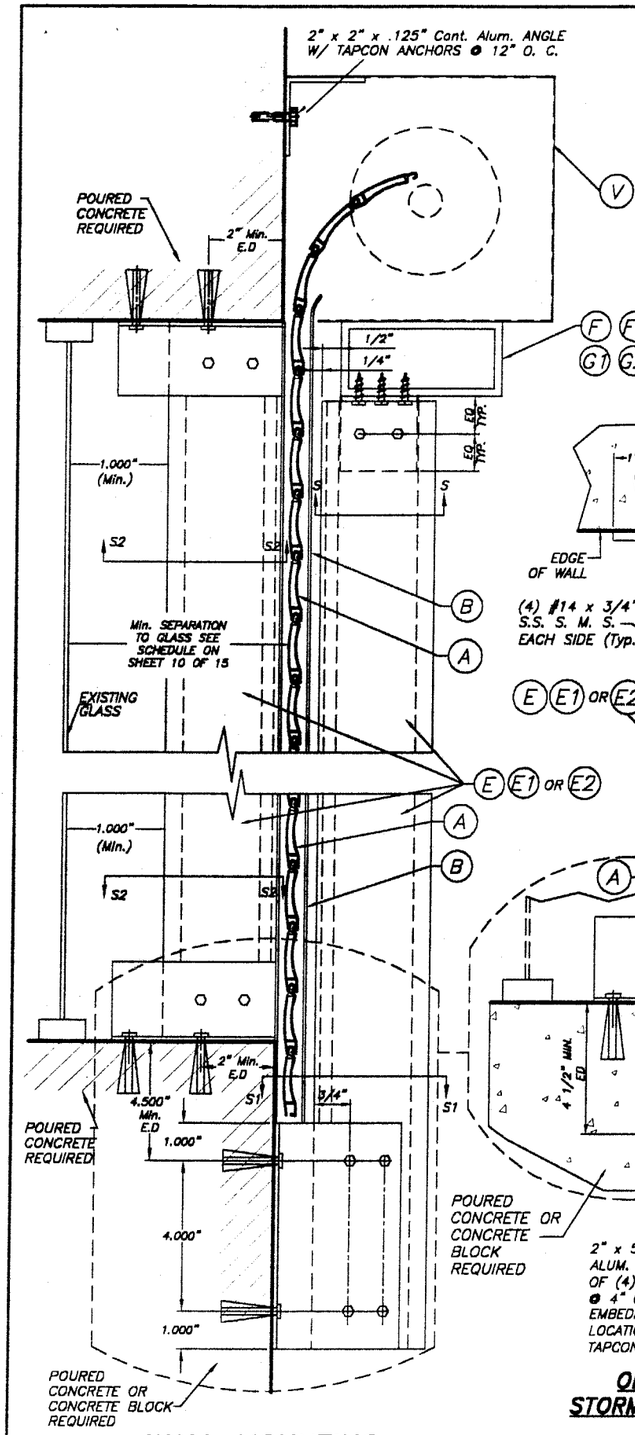

WALL MOUNTING : SECTION V – V (1)

SCALE : 1/4" = 1"

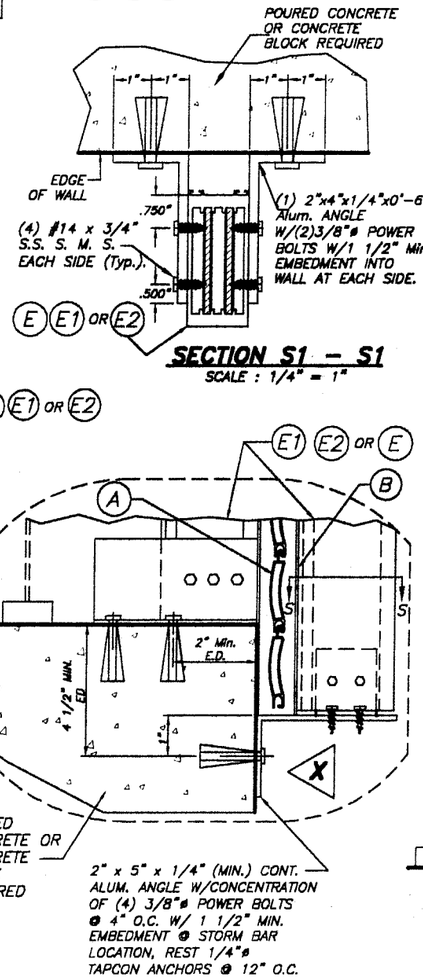

SECTION S1 – S1

SCALE : 1/4" = 1"

OPTIONAL FRONT STORM BAR CONNECTION

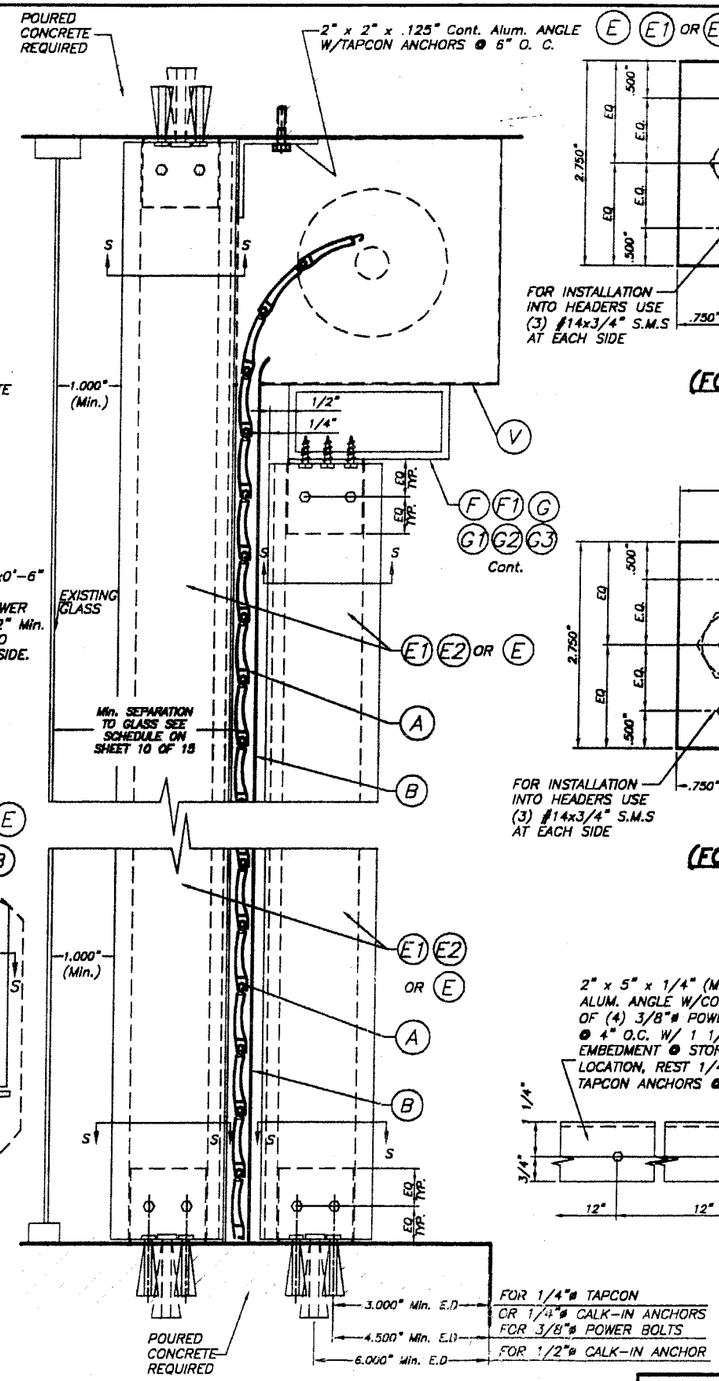

CEILING & FLOOR MOUNTING : SECTION V – V (2)

SCALE : 1/4" = 1"

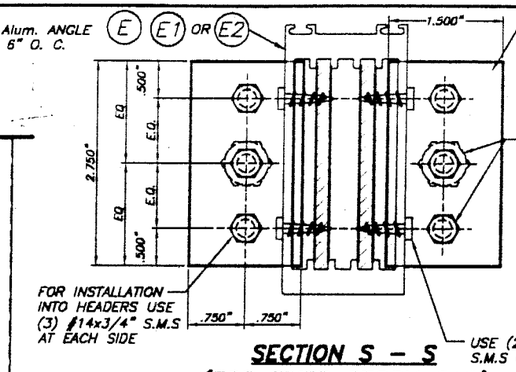

SECTION S – S (FOR FIXED STORM BAR)

SCALE : 1/2" = 1"

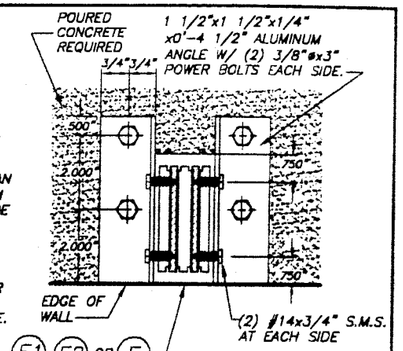

SECTION S2 – S2

SCALE : 1/4" = 1"

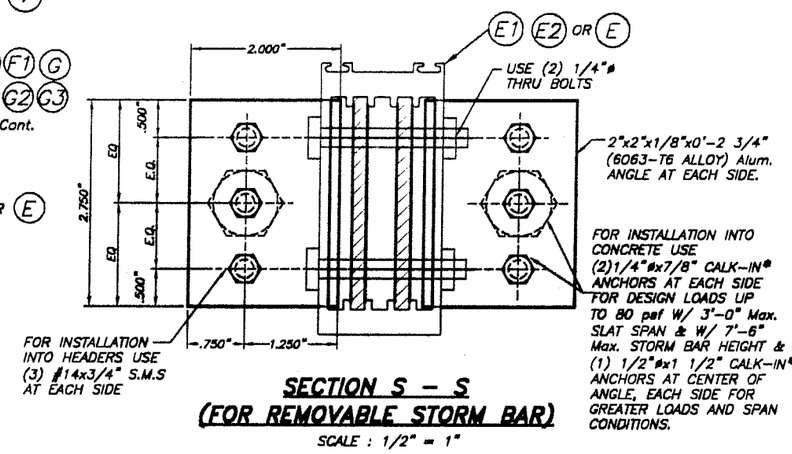

SECTION S – S (FOR REMOVABLE STORM BAR)

SCALE : 1/2" = 1"

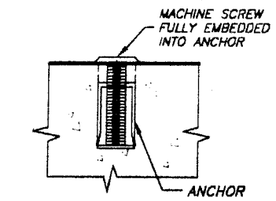

DETAIL A

SCALE : 1/2" = 1"

* 1/4" ø-20 OR 1/2" ø-13 MACHINE SCREWS USED JOINTLY W/ 1/4" ø x 7/8" OR 1/2" ø x 1 1/2" CALK-IN ANCHORS RESPECTIVELY SHALL BE LEFT TOGETHER W/ ANCHORS AT THE TIME STORM BARS ARE REMOVED. (SEE DETAIL A)

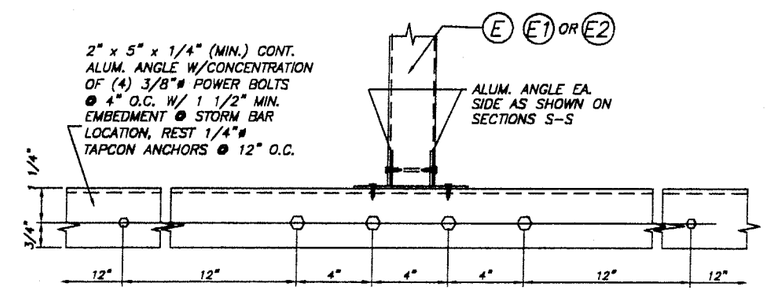

ELEVATION X

SCALE : 1/8" = 1"

PRODUCT REVISED
as complying with the Florida Building Code
Acceptance No. 02-0726.03
Expiration Date 11/08/06
By
Miami Dade Product Control Division

MIAMI-DADE COUNTY

NOTE:
SINGLE SPAN SECTIONS AND DETAILS ARE SIMILAR TO ABOVE SHOWN WITHOUT STORM BAR & HEADERS.

TILTECO INC.
TILLIT TESTING & ENGINEERING COMPANY
6595 N.W. 36th. St., Ste. 217, VIRGINIA GARDENS, FLORIDA 33166
Phone : (305)871-1530 Fax : (305)871-1531
EB-0006719
WALTER A. TILLIT Jr., P. E.
FLORIDA Lic. # 44167

7/6/02

40 mm ROLL-UP SHUTTER

QMI ROLL SHUTTER
933 N. OAKLAWN AVE.
ELMHURST, IL. 60126

AS SHOWN SCALE
6/24/02 DATE
02-362 DRAWING No

REV. NO	DESCRIPTION	DATE	REV. No	DESCRIPTION	DATE
1	OLD DWG No. 00-228	6/24/02	3	-	-
2	GENERAL	12/3/02	4	-	-

SHEET 6A OF 15

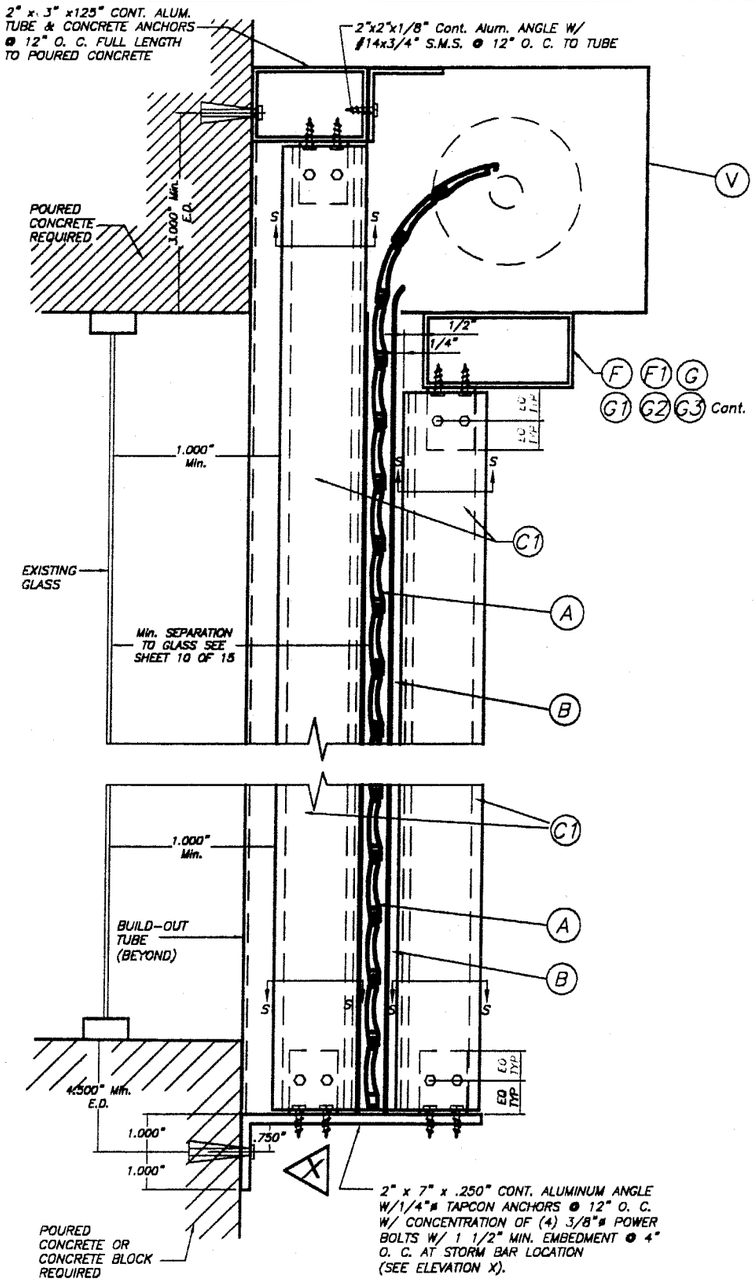

CASE I

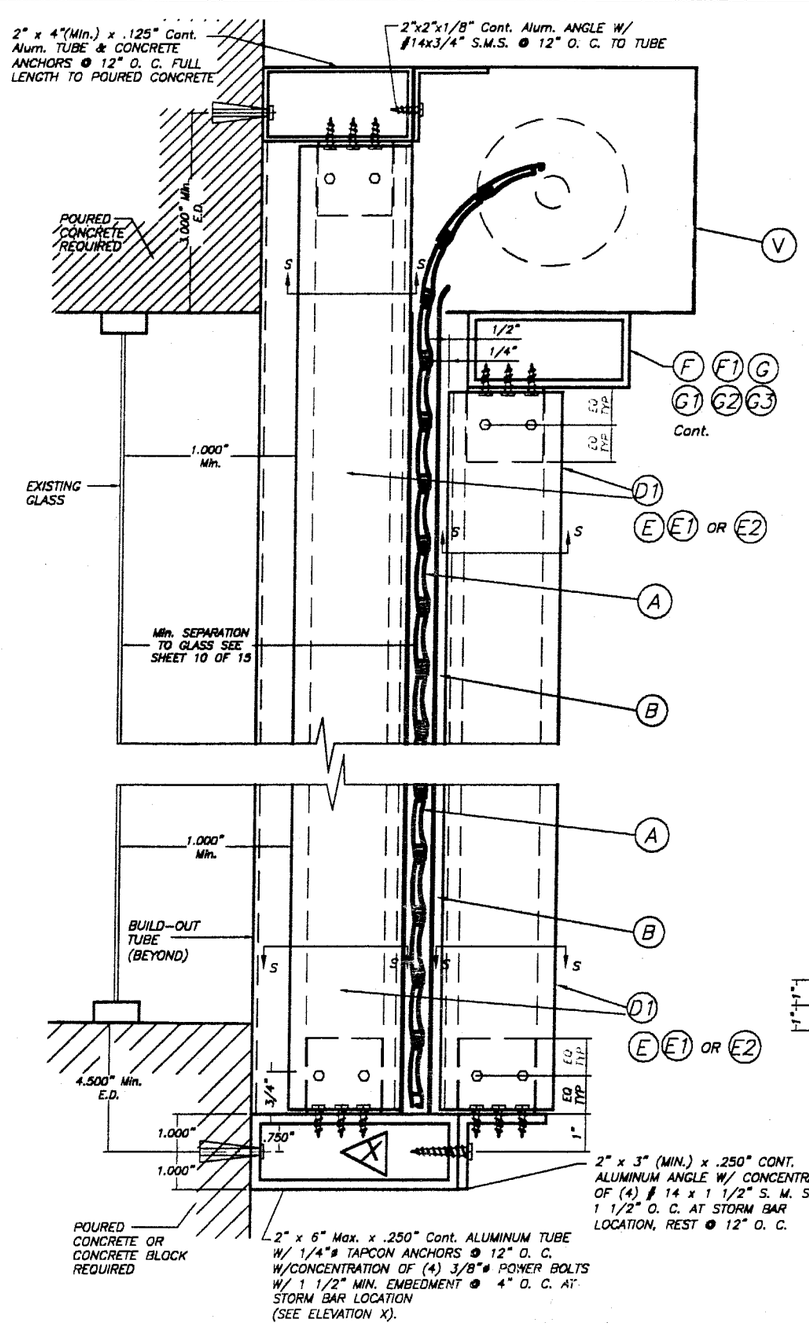

CASE II

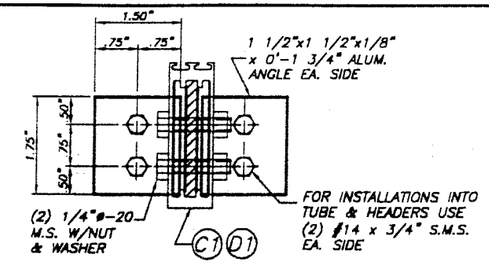

SECTION S – S @ C1 & D1

SCALE : 3/8" = 1"

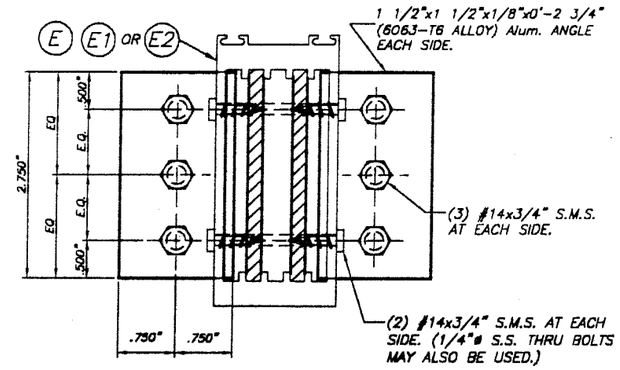

SECTION S – S @ E, E1 & E2

SCALE : 3/8" = 1"

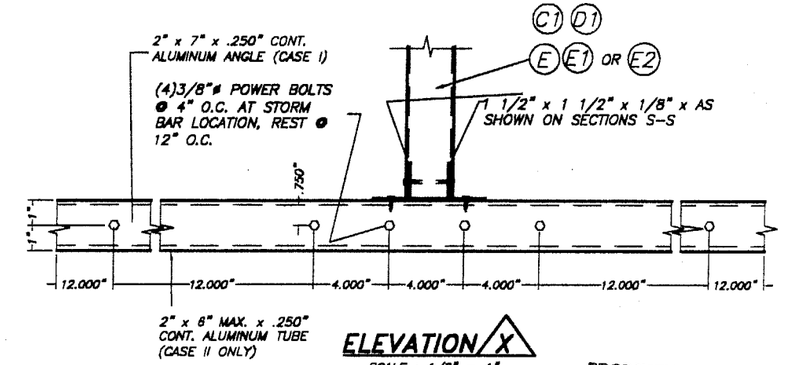

ELEVATION X

SCALE : 1/8" = 1"

PRODUCT REVISED
as complying with the Florida Building Code
Acceptance No. 02-9726.03
Expiration Date 11/08/06
By
Miami Dade Product Control Division

MIAMI-DADE COUNTY

STORM BAR CONNECTION AT BUILD-OUT INSTALLATION : SECTIONS V - V (3)

SCALE : 1/4" = 1"

NOTE:
SINGLE SPAN SECTIONS AND DETAILS ARE SIMILAR TO ABOVE SHOWN WITHOUT STORM BAR & HEADERS.

12/6/02

TILTECO INC.
TILLIT TESTING & ENGINEERING COMPANY
6595 N.W. 36th. St., Ste. 217, VIRGINIA GARDENS, FLORIDA 33166
Phone : (305)871-1530 . Fax : (305)871-1531
EB-0006719
WALTER A. TILLIT Jr., P. E.
FLORIDA Lic. # 44167

40 mm ROLL-UP SHUTTER

QMI ROLL SHUTTER
9333 N. OAKLAWN AVE.
ELMHURST, IL. 60126

AS SHOWN SCALE

6/24/02 DATE

02-362 DRAWING No

REV. NO	DESCRIPTION	DATE	REV. No	DESCRIPTION	DATE
1	OLD DWG No. 00-228	6/24/02	3	–	–
2	GENERAL	12/3/02	4	–	–

SHEET 7 OF 15

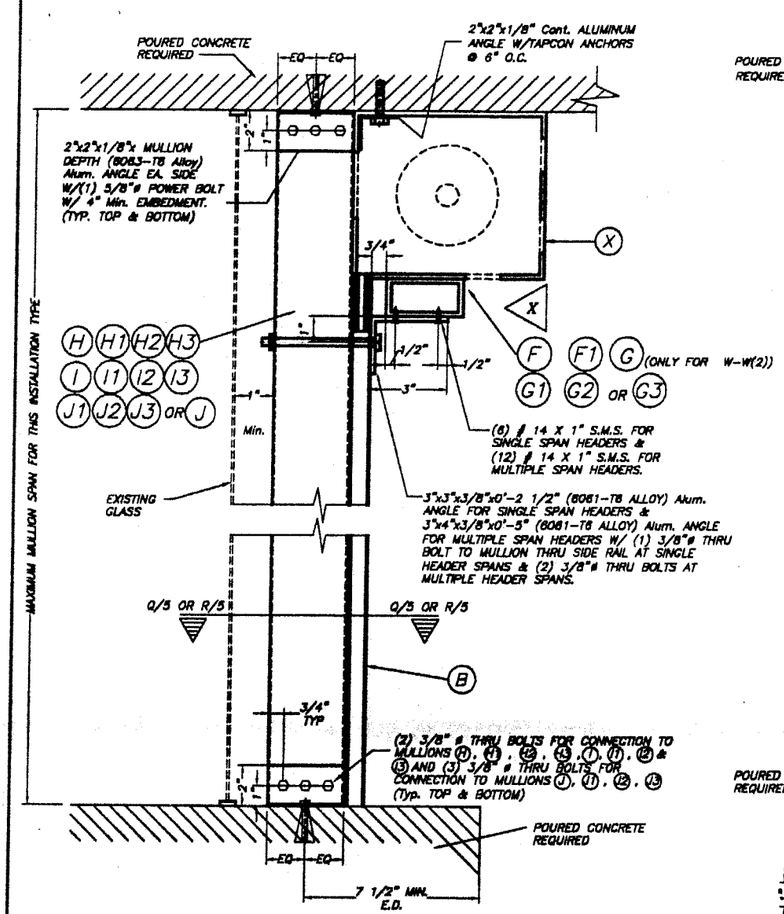

FLOOR/CEILING MOUNTING : SECTION W-W (1), W/O HEADER SECTION W-W (2), W/HEADER

SCALE : 1/8" = 1"

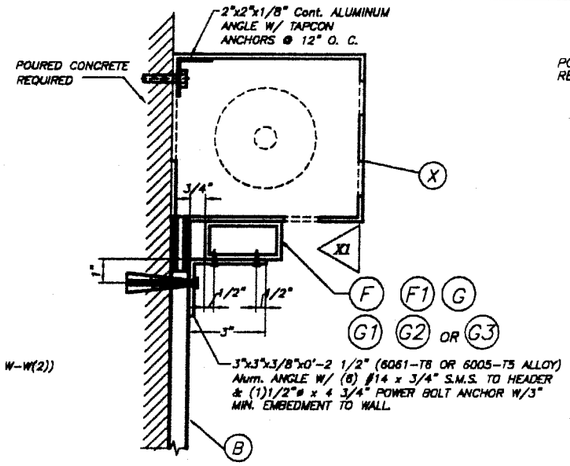

ALTERNATIVE 1 WALL MOUNTING : SECTION W-W(3) *

SCALE : 1/8" = 1"

*LIMITED UP TO 80psf Max. DESIGN LOAD.

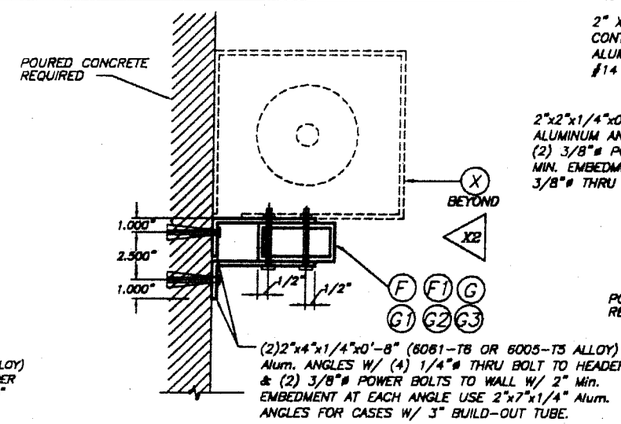

ALTERNATIVE 3 WALL MOUNTING : SECTION W-W(3)

NO DESIGN LOAD LIMITATIONS

SCALE : 1/8" = 1"

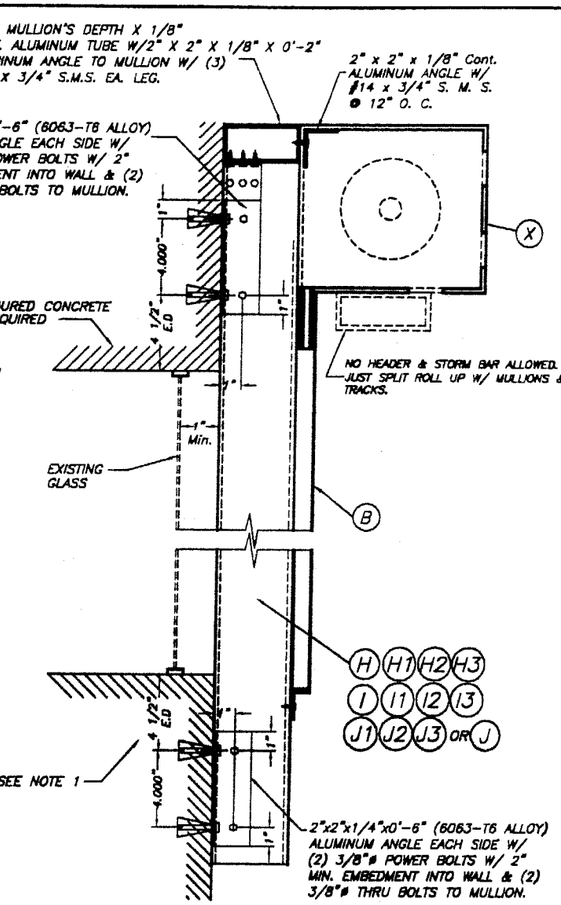

WALL MOUNTING : MULLION CONNECTION AT TOP & BOTTOM : SECTION W-W (1)

SCALE : 1/8" = 1"

NOTE 1 :
EXISTING WALL MAY BE POURED CONCRETE OR CONCRETE BLOCK FOR DESIGN LOADS UP TO 80.0 psf W/ 14'-0" Max. MULLION HEIGHT AND SHALL BE POURED CONCRETE OR CONCRETE FILLED BLOCKS FOR GREATER LOADS AND SPAN CONDITIONS.

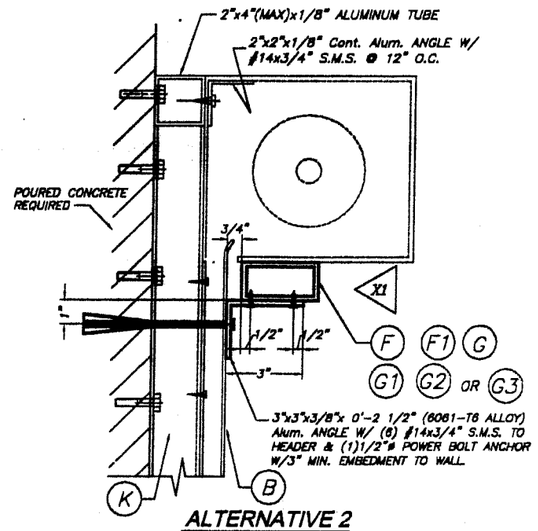

ALTERNATIVE 2 WALL MOUNTING : SECTION W-W(3) *

SCALE : 1/8" = 1"

*LIMITED UP TO 80psf Max. DESIGN LOAD.

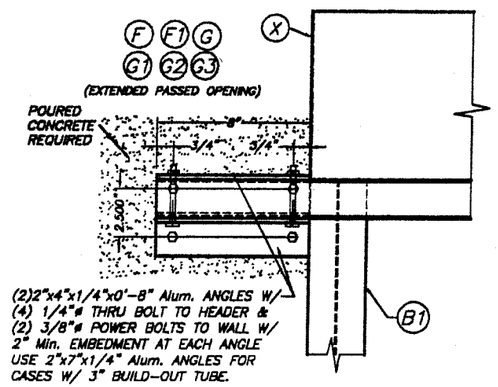

ELEVATION X2

SCALE : 1/8" = 1"

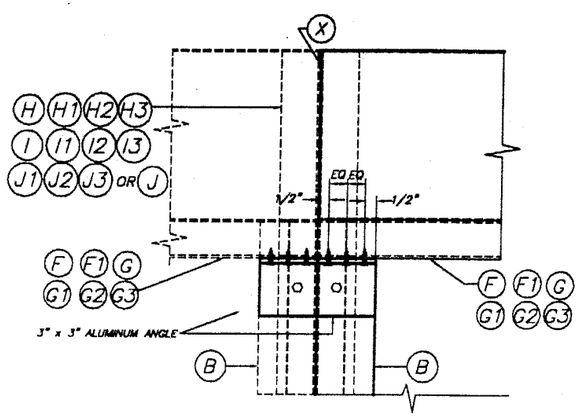

ELEVATION X

SCALE : 1/8" = 1"

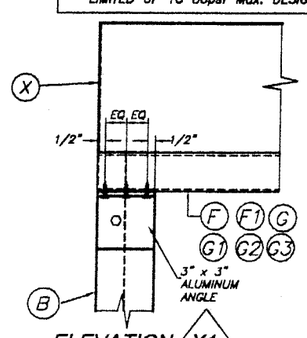

ELEVATION X1

SCALE : 1/8" = 1"

TYPICAL HEADER CONNECTION AT ENDS: SECTIONS W-W

PRODUCT REVISED
as complying with the Florida Building Code
Acceptance No 02-0726.03
Expiration Date 11/08/06
By
Miami Dade Product Control Division

MIAMI-DADE COUNTY

1/6/02

TILLECO INC.
TILLIT TESTING & ENGINEERING COMPANY
6595 N.W. 36th. St., Ste. 217, VIRGINIA GARDENS, FLORIDA 33166
Phone : (305)871-1530 . Fax : (305)871-1531
EB-0006719
WALTER A. TILLIT Jr., P. E.
FLORIDA Lic. # 44167

40 mm ROLL-UP SHUTTER

QMI ROLL SHUTTER
933 N. OAKLAWN AVE.
ELMHURST, IL 60126

REV. NO	DESCRIPTION	DATE	REV. No	DESCRIPTION	DATE
1	OLD DWG No. 00-228	6/24/02	3	-	-
2	GENERAL	12/3/02	4	-	-

AS SHOWN SCALE
6/24/02 DATE
02-362 DRAWING No
SHEET 8 OF 15

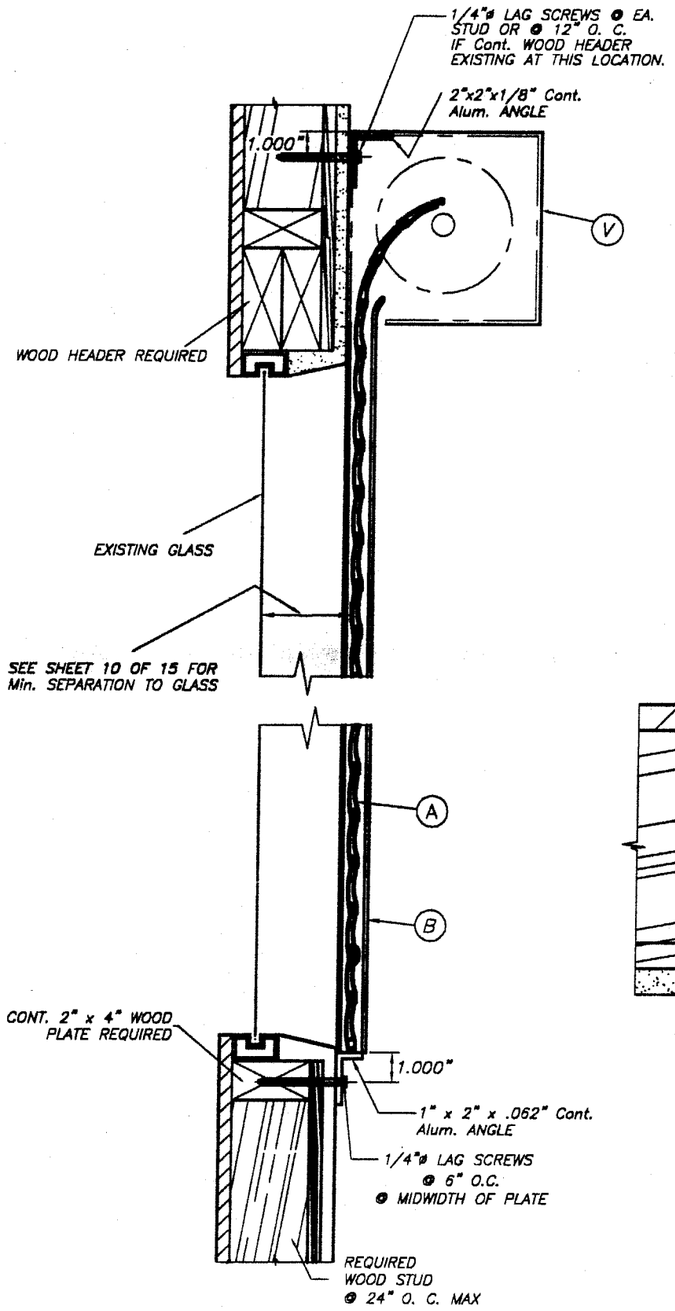

WALL MOUNTING INSTALLATION
SINGLE SPAN CONDITION

N. T. S.

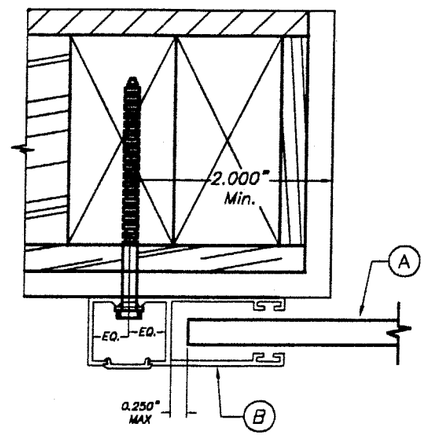

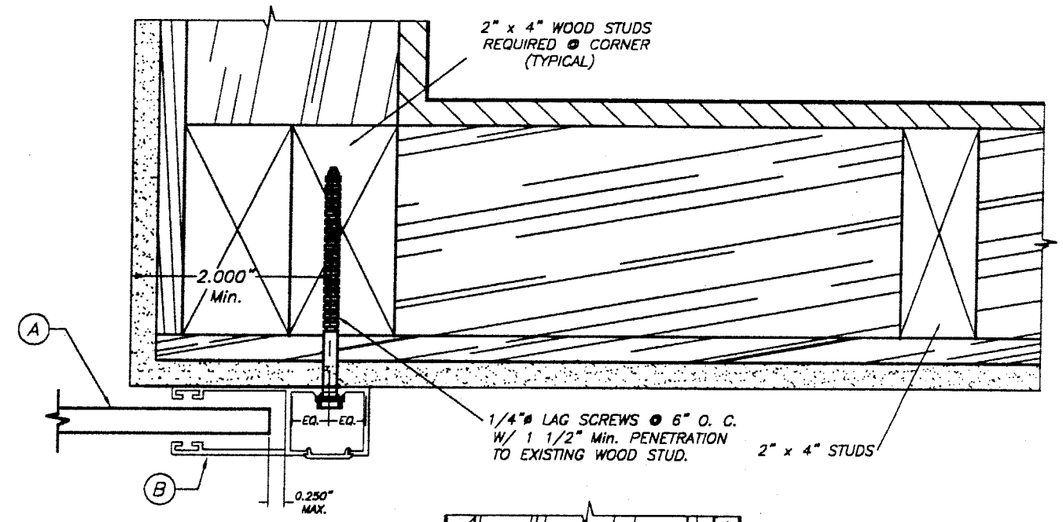

PLAN A (SECTION)
WALL MOUNT

SCALE : 3/8" = 1"

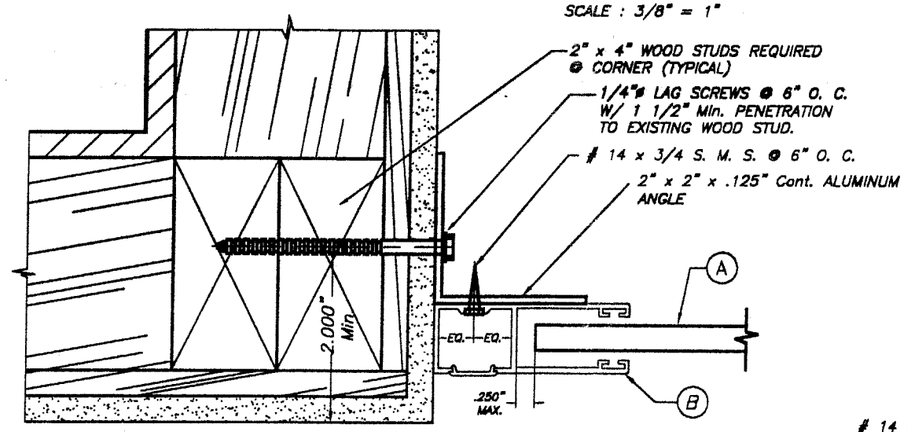

PLAN B (SECTION)
INSIDE MOUNT

SCALE : 3/8" = 1"

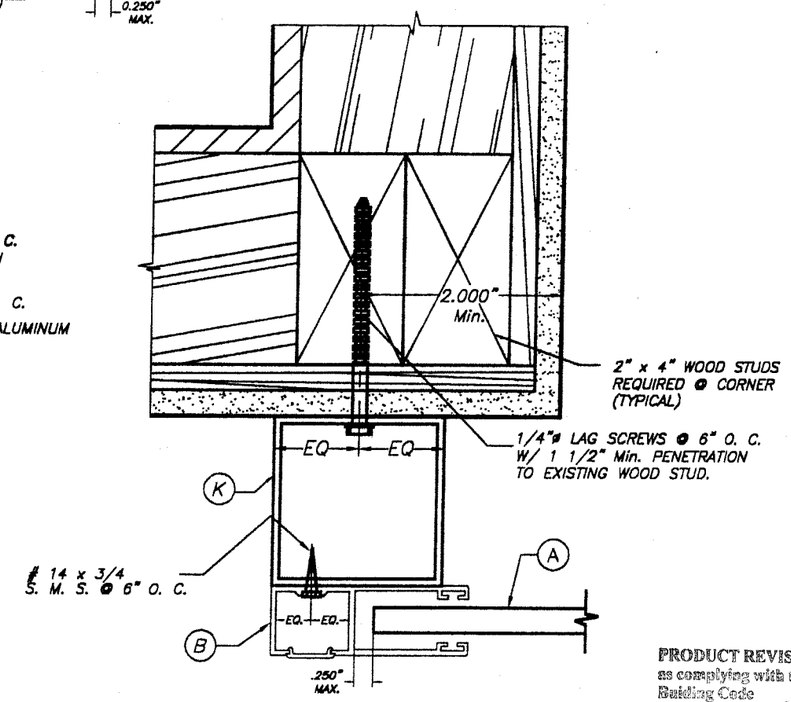

PLAN C (SECTION)
BUILD-OUT

SCALE : 3/8" = 1"

NOTES:

1. INSTALLATIONS ARE ONLY VALID FOR BUILDINGS WITH DESIGN LOAD UP TO 80 p.s.f.
2. FOR NEW FRAME CONSTRUCTION: WOOD MEMBER TO BE SOUTHERN PINE No. 2 W/ SPECIFIC DENSITY OF 0.55 OR EQUAL.
3. MINIMUM PENETRATION OF LAG SCREWS INTO WOOD MEMBER TO BE 1 1/2".

12/6/02

PRODUCT REVISED
as complying with the Florida Building Code
Acceptance No. 02-0726.03
Expiration Date 11/08/06
By
Miami Dade Product Control Division

MIAMI-DADE COUNTY

TILTECO INC.
TILLIT TESTING & ENGINEERING COMPANY
6595 N.W. 36th. St., Ste. 217, VIRGINIA GARDENS, FLORIDA 33166
Phone : (305)871-1530 . Fax : (305)871-1531
EB-0006719
WALTER A. TILLIT Jr., P. E.
FLORIDA Lic. # 44167

40 mm ROLL-UP SHUTTER

QMI ROLL SHUTTER
933 N. OAKLAWN AVE.
ELMHURST, IL 60126

AS SHOWN SCALE

6/24/02 DATE

02-362 DRAWING No

REV. NO	DESCRIPTION	DATE	REV. No	DESCRIPTION	DATE
1	OLD DWG No. 00-228	6/24/02	3	-	-
2	GENERAL	12/3/02	4	-	-

SLAT PERFORMANCE CHART
MAXIMUM DESIGN PRESSURE RATING "W" (p. s. f.) AND CORRESPONDING MAXIMUM SLAT SPAN "L"

(USE NEGATIVE PRESSURE VALUES AS PER ASCE 7-98.)

DESIGN LOAD "W" (p.s.f.)	TYPE 1 SLAT 40 mm Extruded Slat		
	MAXIMUM SLAT SPAN	MINIMUM SEPARATION TO GLASS	MINIMUM SEPARATION TO GLASS
	SINGLE & MULTIPLE UNIT *	SINGLE & MULTIPLE UNIT **	SINGLE & MULTIPLE UNIT ***
40.0	5'-1"	3"	3"
45.0	4'-11"	3"	3"
50.0	4'-9"	3"	3"
55.0	4'-7"	3"	3"
60.0	4'-5"	2 7/8"	2 3/4"
65.0	4'-4"	2 3/4"	2 3/4"
70.0.	4'-3"	2 3/4"	2 3/4"
75.0	4'-1"	2 3/4"	2 3/4"
80.0	4'-0"	2 5/8"	2 5/8"
85.0	3'-11"	2 5/8"	2 5/8"
90.0	3'-10"	2 5/8"	2 5/8"
95.0	3'-10"	2 5/8"	2 5/8"
100.0	3'-9"	2 5/8"	2 5/8"
105.0	3'-8"	2 5/8"	2 5/8"
110.0	3'-7"	2 5/8"	2 5/8"
115.0	3'-7"	2 5/8"	2 5/8"
120.0	3'-6"	2 5/8"	2 5/8"

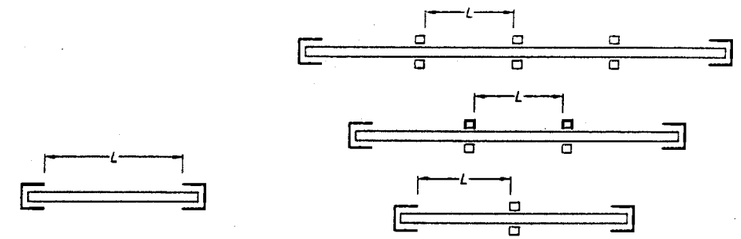

SINGLE SPAN

MULTIPLE SPAN

SPAN LAYOUT

* SPANS VALID FOR EVERY INSTALLATION LOCATED AT ANY ELEVATION OF BUILDING MEASURED AT BOTTOM OF SHUTTER. MINIMUM SEPARATION TO GLASS FOR SINGLE AND MULTIPLE UNITS SHALL BE MEASURED FROM BACK OF SLAT TO GLASS.

** MINIMUM SEPARATION TO GLASS FOR SHUTTERS INSTALLED WITHIN THE FIRST 30'-0" ELEVATION OF BUILDING AND MAXIMUM SPAN. SEE TABLE 1 FOR Min. SEPARATION TO GLASS FOR SPANS LESS THAN THE Max. ALLOWED.

*** MINIMUM SEPARATION TO GLASS FOR SHUTTERS INSTALLED ABOVE 30'-0" ELEVATION OF BUILDING, MEASURED AT BOTTOM OF SHUTTER.

NOTE : THE TOTAL SLAT DEFLECTION AFTER ADDING THE DEFLECTION OF THE HEADER AND/OR THE STORM BAR SHALL NOT EXCEED A MAXIMUM OF 2" OR L/30 IN THE POSITIVE DIRECTION AND A MAXIMUM OF L/30 IN THE NEGATIVE DIRECTION.

PRODUCT REVISED
as complying with the Florida Building Code
Acceptance No. 02-0726.03
Expiration Date 11/08/06
By
Miami Dade Product Control Division

MIAMI-DADE COUNTY

12/6/02

TILTECO INC.
TILLIT TESTING & ENGINEERING COMPANY
6595 N.W. 36th. St., Ste. 217, VIRGINIA GARDENS, FLORIDA 33166
Phone : (305)871-1530 . Fax : (305)871-1531
EB-0006719
WALTER A. TILLIT Jr., P. E.
FLORIDA Lic. # 44167

40 mm ROLL-UP SHUTTER

QMI ROLL SHUTTER
933 N. OAKLAWN AVE.
ELMHURST, IL. 60126

REV. NO	DESCRIPTION	DATE	REV. No	DESCRIPTION	DATE
1	OLD DWG No. 00-228	6/24/02	3	-	-
2	GENERAL	12/3/02	4	-	-

AS SHOWN
SCALE

6/24/02
DATE

02-362
DRAWING No

SHEET 10 OF 15

STORM BAR LOADING CHART

MAXIMUM DESIGN PRESSURE RATING "W" (p. s. f.) AND CORRESPONDING MAXIMUM SPAN "L" FOR A GIVEN TYPE OF STORM BAR AND STORM BAR SPACING FOR INSTALLATION WITH 1 STORM BAR AT FRONT AND 1 AT REAR

(USE NEGATIVE PRESSURE VALUES AS PER ASCE 7-98)

MAXIMUM DESIGN LOAD "W" (p.s.f.)	TYPE 1 STORM BAR (C1) .8" x 2.610" W/INSERT (QMI-93)			TYPE 2 STORM BAR (D1) .8" x 3.123" W/INSERT (QMI-96)			TYPE 3 STORM BAR (E) 1.625" x 3.623" (QMI-97)			TYPE 4 STORM BAR (E1) 1.625" x 3.623" W/INSERT (QMI-97)			TYPE 5 STORM BAR (E2) 1.625" x 3.623" W/2 INSERTS (QMI-97)		
	STORM BAR SPACING *			STORM BAR SPACING *			STORM BAR SPACING *			STORM BAR SPACING *			STORM BAR SPACING *		
	≤ 3'-0"	3' TO 4'	4' TO 5'	≤ 3'-0"	3' TO 4'	4' TO 5'	≤ 3'-0"	3' TO 4'	4' TO 5'	< 3'-0"	3' TO 4'	4' TO 5'	< 3'-0"	3' TO 4'	4' TO 5'
40.0 OR LESS	7'-0"	6'-10"	6'-2"	8'-5"	7'-10"	7'-5"	10'-0"	9'-5"	8'-11"	10'-6"	9'-10"	9'-3"	10'-11"	10'-2"	9'-7"
45.0	7'-0"	6'-6"	5'-9"	8'-2"	7'-7"	7'-1"	9'-10"	9'-1"	8'-8"	10'-3"	9'-6"	9'-0"	10'-7"	9'-10"	9'-4"
50.0	7'-0"	6'-2"	5'-6"	8'-0"	7'-5"	6'-8"	9'-7"	8'-11"	8'-5"	9'-11"	9'-3"	8'-9"	10'-4"	9'-7"	9'-1"
55.0	6'-9"	5'-10"	5'-3"	7'-10"	7'-2"	6'-5"	9'-4"	8'-8"	8'-2"	9'-9"	9'-1"	8'-7"	10'-1"	9'-4"	8'-10"
60.0	6'-6"	5'-7"	5'-0"	7'-7"	6'-10"	6'-1"	9'-1"	8'-6"	8'-0"	9'-6"	8'-10"	8'-4"	9'-10"	9'-2"	8'-8"
65.0	6'-2"	5'-5"	4'-10"	7'-6"	6'-7"	5'-10"	8'-11"	8'-4"	7'-10"	9'-4"	8'-8"	8'-2"	9'-8"	9'-0"	8'-6"
70.0	6'-0"	5'-2"	4'-8"	7'-4"	6'-4"	5'-8"	8'-9"	8'-2"	7'-9"	9'-2"	8'-6"	7'-11"	9'-6"	8'-10"	8'-4"
75.0	5'-9"	5'-0"	4'-6"	7'-1"	6'-1"	5'-6"	8'-8"	8'-0"	7'-7"	9'-0"	8'-4"	7'-8"	9'-4"	8'-8"	8'-2"
80.0	5'-7"	4'-10"	4'-4"	6'-10"	5'-11"	5'-3"	8'-6"	7'-11"	7'-6"	8'-10"	8'-3"	7'-6"	9'-2"	8'-6"	8'-0"
85.0	5'-5"	4'-8"	4'-2"	6'-7"	5'-9"	5'-2"	8'-4"	7'-9"	7'-4"	8'-9"	8'-1"	7'-4"	9'-0"	8'-5"	7'-9"
90.0	5'-3"	4'-7"	4'-1"	6'-5"	5'-7"	5'-0"	8'-3"	7'-8"	7'-3"	8'-7"	7'-10"	7'-3"	8'-11"	8'-3"	7'-6"
95.0	5'-2"	4'-5"	4'-0"	6'-3"	5'-5"	4'-10"	8'-2"	7'-7"	7'-2"	8'-6"	7'-8"	7'-2"	8'-9"	8'-2"	7'-4"
100.0	5'-0"	4'-4"	3'-11"	6'-1"	5'-3"	4'-9"	8'-0"	7'-6"	7'-1"	8'-4"	7'-6"	7'-1"	8'-8"	8'-0"	7'-2"
105.0	4'-11"	4'-3"	3'-9"	6'-0"	5'-2"	4'-7"	7'-11"	7'-5"	7'-0"	8'-3"	7'-5"	7'-0"	8'-7"	7'-9"	7'-0"
110.0	4'-9"	4'-2"	3'-8"	5'-10"	5'-1"	4'-6"	7'-10"	7'-4"	6'-11"	8'-2"	7'-4"	6'-11"	8'-6"	7'-7"	6'-11"
115.0	4'-8"	4'-0"	3'-7"	5'-8"	4'-11"	4'-5"	7'-9"	7'-3"	6'-9"	8'-0"	7'-3"	6'-9"	8'-4"	7'-5"	6'-9"
120.0	4'-7"	3'-11"	3'-6"	5'-7"	4'-10"	4'-4"	7'-8"	7'-2"	6'-7"	7'-10"	7'-2"	6'-7"	8'-3"	7'-3"	6'-7"

* STORM BAR SPACING SHALL BE SUCH THAT MAXIMUM SLAT SPAN SHALL NOT BE EXCEEDED.

PRODUCT REVISED
as complying with the Florida Building Code
Acceptance No 02-0726.03
Expiration Date 11.08.06
By
Miami Dade Product Control Division

MIAMI-DADE COUNTY

12/6/02

TILTECO INC.
TILLIT TESTING & ENGINEERING COMPANY
8595 N.W. 38th. St., Ste. 217, VIRGINIA GARDENS, FLORIDA 33166
Phone : (305)871-1530 . Fax : (305)871-1531
EB-0006719
WALTER A. TILLIT Jr., P. E.
FLORIDA Lic. # 44167

40 mm ROLL-UP SHUTTER

QMI ROLL SHUTTER
933 N. OAKLAWN AVE.
ELMHURST, IL 60126

REV. NO	DESCRIPTION	DATE	REV. No	DESCRIPTION	DATE
1	OLD DWG No. 00-228	6/24/02	3	-	-
2	GENERAL	12/3/02	4	-	-

AS SHOWN
SCALE

6/24/02
DATE

02-362
DRAWING No

STORM BAR LOADING CHART

MAXIMUM DESIGN PRESSURE RATING "W" (p. s. f.) AND CORRESPONDING MAXIMUM SPAN "L" FOR A GIVEN TYPE OF STORM BAR AND STORM BAR SPACING FOR INSTALLATION WITH 2 OR MORE STORM BARS AT FRONT AND 2 OR MORE STORM BARS AT REAR.

(USE NEGATIVE PRESSURE VALUES AS PER ASCE 7-98)

MAXIMUM DESIGN LOAD "W" (p.s.f.)	TYPE 1 STORM BAR (C1) .8" x 2.610" W/INSERT (QMI-93)			TYPE 2 STORM BAR (D1) .8" x 3.123" W/INSERT (QMI-66)			TYPE 3 STORM BAR (E) 1.625" x 3.623" (QMI-67)			TYPE 4 STORM BAR (E1) 1.625" x 3.623" W/INSERT (QMI-67)			TYPE 5 STORM BAR (E2) 1.625" x 3.623" W/2 INSERTS (QMI-67)		
	STORM BAR SPACING *			STORM BAR SPACING *			STORM BAR SPACING *			STORM BAR SPACING *			STORM BAR SPACING *		
	≤ 3'-0"	3' TO 4'	4' TO 5'	≤ 3'-0"	3' TO 4'	4' TO 5'	≤ 3'-0"	3' TO 4'	4' TO 5'	< 3'-0"	3' TO 4'	4' TO 5'	< 3'-0"	3' TO 4'	4' TO 5'
40.0 OR LESS	7'-0"	7'-0"	6'-6"	8'-9"	8'-1"	7'-8"	10'-0"	9'-8"	9'-2"	10'-6"	10'-1"	9'-7"	11'-3"	10'-6"	9'-11"
45.0	7'-0"	6'-11"	6'-2"	8'-6"	7'-10"	7'-5"	10'-0"	9'-5"	8'-11"	10'-6"	9'-10"	9'-3"	10'-11"	10'-2"	9'-7"
50.0	7'-0"	6'-6"	5'-10"	8'-3"	7'-8"	7'-2"	9'-10"	9'-2"	8'-8"	10'-3"	9'-7"	9'-1"	10'-8"	9'-11"	9'-4"
55.0	7'-0"	6'-3"	5'-7"	8'-1"	7'-6"	6'-10"	9'-8"	9'-0"	8'-6"	10'-0"	9'-4"	8'-10"	10'-5"	9'-8"	9'-2"
60.0	6'-11"	6'-0"	5'-4"	7'-10"	7'-3"	6'-6"	9'-5"	8'-9"	8'-3"	9'-10"	9'-2"	8'-8"	10'-2"	9'-6"	8'-11"
65.0	6'-7"	5'-9"	5'-1"	7'-9"	7'-0"	6'-3"	9'-3"	8'-7"	8'-2"	9'-7"	8'-11"	8'-6"	10'-0"	9'-3"	8'-9"
70.0	6'-5"	5'-6"	4'-11"	7'-7"	6'-9"	6'-0"	9'-1"	8'-5"	8'-0"	9'-5"	8'-9"	8'-4"	9'-9"	9'-1"	8'-7"
75.0	6'-2"	5'-4"	4'-9"	7'-5"	6'-6"	5'-10"	8'-11"	8'-3"	7'-10	9'-3"	8'-8"	8'-2"	9'-7"	8'-11"	8'-6"
80.0	6'-0"	5'-2"	4'-7"	7'-3"	6'-4"	5'-8"	8'-9"	8'-2"	7'-9"	9'-2"	8'-6"	7'-11"	9'-6"	8'-10"	8'-4"
85.0	5'-9"	5'-0"	4'-6"	7'-1"	6'-1"	5'-6"	8'-8"	8'-0"	7'-7"	9'-0"	8'-4"	7'-8"	9'-4"	8'-8"	8'-2"
90.0	5'-7"	4'-10"	4'-4"	6'-10"	5'-11"	5'-4"	8'-6"	7'-11"	7'-6"	8'-10"	8'-3"	7'-6"	9'-2"	8'-7"	8'-0"
95.0	5'-6"	4'-9"	4'-3"	6'-8"	5'-9"	5'-2"	8'-7"	7'-10"	7'-5"	8'-9"	8'-2"	7'-5"	9'-1"	8'-5"	7'-10"
100.0	5'-4"	4'-7"	4'-2"	6'-6"	5'-8"	5'-1"	8'-3"	7'-9"	7'-4"	8'-8"	7'-11"	7'-4"	8'-11"	8'-4"	7'-7"
105.0	5'-2"	4'-6"	4'-0"	6'-4"	5'-6"	4'-11"	8'-2"	7'-7"	7'-3"	8'-6"	7'-9"	7'-3"	8'-10"	8'-3"	7'-5"
110.0	5'-1"	4'-5"	3'-11"	6'-2"	5'-5"	4'-10"	8'-1"	7'-6"	7'-2"	8'-5"	7'-7"	7'-2"	8'-9"	8'-1"	7'-3"
115.0	5'-0"	4'-4"	3'-10"	6'-1"	5'-3"	4'-8"	8'-0"	7'-5"	7'-1"	8'-4"	7'-5"	7'-1"	8'-8"	7'-11"	7'-1"
120.0	4'-10"	4'-3"	3'-9"	5'-11"	5'-2"	4'-7"	7'-11"	7'-4"	7'-0"	8'-3"	7'-4"	7'-0"	8'-7"	7'-9"	7'-0"

* STORM BAR SPACING SHALL BE SUCH THAT MAXIMUM SLAT SPAN SHALL NOT BE EXCEEDED.

PRODUCT REVISED
as complying with the Florida
Buiding Code
Acceptance No 02-0726.03
Expiration Date 11/08/06
By
Miami Dade Product Control
Division

MIAMI-DADE COUNTY

7/16/02

TILTECO INC.
TILLIT TESTING & ENGINEERING COMPANY
6595 N.W. 36th. St., Ste. 217, VIRGINIA GARDENS, FLORIDA 33166
Phone : (305)871-1530 . Fax : (305)871-1531
EB-0006719
WALTER A. TILLIT Jr., P. E.
FLORIDA Lic. # 44167

40 mm ROLL-UP SHUTTER

QMI ROLL SHUTTER
933 N. OAKLAWN AVE.
ELMHURST, IL. 60126

REV. NO	DESCRIPTION	DATE	REV. No	DESCRIPTION	DATE
1	OLD DWG No. 00-228	8/24/02	3	-	-
2	GENERAL	12/3/02	4	-	-

AS SHOWN
SCALE

6/24/02
DATE

02-362
DRAWING No

SHEET 11A OF 15

HEADER LOADING CHART

MAXIMUM DESIGN PRESSURE RATING "W" (p. s. f.) AND CORRESPONDING MAXIMUM SPAN "L" (Ft.) FOR A GIVEN TYPE OF HEADER AND STORM BAR HEIGHT (Ft.).

(USE NEGATIVE PRESSURE VALUES AS PER ASCE 7-98)

MAXIMUM DESIGN LOAD "W" (p.s.f.)	TYPE 1 HEADER (F) 1.0" X 3.580" (0.048-68)			TYPE 2 HEADER (F1) 1.0" X 3.580" W/INSERT (0.048-68)			TYPE 3 HEADER (G) 1.5" X 6.0" (0.048-68)				TYPE 4 HEADER (G1) 1.5" X 6.0" W/INSERT (0.048-68)				TYPE 5 HEADER (G2) 2" x 4" X .125"			TYPE 6 HEADER (G3) 2" x 4" X .250"			
	STORM BAR HEIGHT			STORM BAR HEIGHT			STORM BAR HEIGHT				STORM BAR HEIGHT				STORM BAR HEIGHT			STORM BAR HEIGHT			
	≤ 5'-0"	5' TO 7'	7' TO 8'	≤ 5'-0"	5' TO 7'	7' TO 8'	≤ 7'-0"	7' TO 9'	9' TO 10'	10' TO 12'	≤ 7'-0"	7' TO 9'	9' TO 10'	10' TO 12'	≤ 5'-0"	5' TO 8'	8' TO 10'	≤ 6'-0"	6' TO 8'	8' TO 10'	10' TO 12'
40.0 OR LESS	12'-0"	11'-1"	10'-6"	12'-0"	11'-1"	10'-6"	17'-1"	16'-0"	15'-7"	14'-11"	17'-1"	16'-0"	15'-7"	14'-11"	12'-2"	9'-8"	8'-8"	14'-10"	12'-11"	11'-6"	10'-6"
45.0	11'-8"	10'-7"	9'-10"	11'-8"	10'-7"	9'-10"	16'-7"	15'-7"	15'-2"	14'-6"	16'-7"	15'-7"	15'-2"	14'-6"	11'-6"	9'-1"	8'-2"	14'-0"	12'-2"	10'-10"	9'-11"
50.0	11'-5"	10'-0"	9'-4"	11'-5"	10'-0"	9'-4"	16'-2"	15'-2"	14'-9"	14'-1"	16'-2"	15'-2"	14'-9"	14'-1"	10'-11"	8'-8"	7'-9"	13'-4"	11'-6"	10'-4"	9'-5"
55.0	11'-1"	9'-7"	8'-11"	11'-1"	9'-7"	8'-11"	15'-9"	14'-10"	14'-5"	13'-8"	15'-9"	14'-10"	14'-5"	13'-8"	10'-5"	8'-3"	7'-4"	12'-8"	11'-0"	9'-10"	9'-0"
60.0	10'-10"	9'-2"	8'-7"	10'-10"	9'-2"	8'-7"	15'-5"	14'-6"	14'-1"	13'-1"	15'-5"	14'-6"	14'-1"	13'-1"	10'-0"	7'-10"	7'-1"	12'-2"	10'-6"	9'-5"	9'-7"
65.0	10'-5"	8'-9"	8'-3"	10'-5"	8'-9"	8'-3"	15'-1"	14'-2"	13'-10"	12'-7"	15'-1"	14'-2"	13'-10"	12'-7"	9'-7"	7'-7"	6'-9"	11'-8"	10'-1"	9'-0"	8'-3"
70.0	10'-0"	8'-6"	7'-11"	10'-0"	8'-6"	7'-11"	14'-10"	13'-11"	13'-4"	12'-2"	14'-10"	13'-11"	13'-4"	12'-2"	9'-3"	7'-3"	6'-6"	11'-3"	9'-9"	8'-8"	7'-11"
75.0	9'-8"	8'-2"	7'-6"	9'-8"	8'-2"	7'-6"	14'-7"	13'-6"	12'-10"	11'-9"	14'-7"	13'-6"	12'-10"	11'-9"	8'-11"	7'-1"	6'-4"	10'-10"	9'-5"	8'-5"	7'-6"
80.0	9'-4"	7'-11"	7'-5"	9'-4"	7'-11"	7'-5"	14'-4"	13'-1"	12'-5"	11'-4"	14'-4"	13'-1"	12'-5"	11'-4"	8'-8"	6'-10"	6'-1"	10'-6"	9'-1"	8'-2"	7'-5"
85.0	9'-1"	7'-8"	7'-2"	9'-1"	7'-8"	7'-2"	14'-2"	12'-9"	12'-1"	11'-0"	14'-2"	12'-9"	12'-1"	11'-0"	8'-4"	6'-7"	5'-11"	10'-2"	8'-10"	7'-11"	7'-3"
90.0	8'-10"	7'-6"	7'-0"	8'-10"	7'-6"	7'-0"	13'-11"	12'-4"	11'-9"	10'-8"	13'-11"	12'-4"	11'-9"	10'-8"	8'-2"	6'-5"	5'-8"	9'-11"	8'-7"	7'-8"	7'-0"
95.0	8'-7"	7'-3"	6'-10"	8'-7"	7'-3"	6'-10"	13'-8"	12'-0"	11'-5"	10'-5"	13'-8"	12'-0"	11'-5"	10'-5"	7'-11"	6'-3"	5'-7"	9'-6"	8'-4"	7'-6"	6'-10"
100.0	8'-5"	7'-1"	6'-7"	8'-5"	7'-1"	6'-7"	13'-4"	11'-9"	11'-1"	10'-2"	13'-4"	11'-9"	11'-1"	10'-2"	7'-9"	6'-1"	5'-5"	9'-5"	8'-2"	7'-3"	6'-8"
105.0	8'-2"	6'-11"	6'-6"	8'-2"	6'-11"	6'-6"	13'-0"	11'-5"	10'-10"	9'-11"	13'-0"	11'-5"	10'-10"	9'-11"	7'-6"	5'-11"	5'-4"	9'-2"	7'-11"	7'-1"	6'-6"
110.0	8'-0"	6'-9"	6'-4"	8'-0"	6'-9"	6'-4"	12'-8"	11'-2"	10'-7"	9'-8"	12'-8"	11'-2"	10'-7"	9'-8"	7'-4"	5'-10"	5'-2"	9'-0"	7'-9"	6'-11"	6'-4"
115.0	7'-10"	6'-7"	6'-2"	7'-10"	6'-7"	6'-2"	12'-5"	10'-11"	10'-4"	9'-6"	12'-5"	10'-11"	10'-4"	9'-6"	7'-2"	5'-8"	5'-1"	8'-9"	7'-7"	6'-10"	6'-2"
120.0	7'-6"	6'-6"	6'-1"	7'-8"	6'-6"	6'-1"	12'-2"	10'-8"	10'-2"	9'-3"	12'-2"	10'-8"	10'-2"	9'-3"	7'-1"	5'-7"	5'-0"	8'-7"	7'-5"	6'-8"	6'-1"

PRODUCT REVISED
as complying with the Florida
Building Code
Acceptance No. 02-0726.03
Expiration Date 11/08/06
By
Miami Dade Product Control
Division

MIAMI-DADE COUNTY

7/6/02

TILLIT TESTING & ENGINEERING COMPANY
8505 N.W. 36th. St., Ste. 217, VIRGINIA GARDENS, FLORIDA 33166
Phone : (305)871-1530 . Fax : (305)871-1531
EB-0006719
WALTER A. TILLIT Jr., P. E.
FLORIDA Lic. # 44167

40 mm ROLL-UP SHUTTER

QMI ROLL SHUTTER
933 N. OAKLAWN AVE.
ELMHURST, IL. 60126

REV. NO	DESCRIPTION	DATE	REV. No	DESCRIPTION	DATE
1	OLD DWG No. 00-228	6/24/02	3	-	-
2	GENERAL	12/3/02	4	-	-

AS SHOWN
SCALE

6/24/02
DATE

02-362
DRAWING No

SHEET 12 OF 15

MULLION LOADING CHART

MAXIMUM DESIGN PRESSURE RATING "W" (p. s. f.) AND CORRESPONDING MAXIMUM SPAN "L" (Ft.) FOR A GIVEN TYPE OF MULLION AND MULLION SPACING (Ft.).

(USE NEGATIVE PRESSURE VALUES AS PER ASCE 7-98)

MAXIMUM DESIGN LOAD "W" (p.s.f.)	TYPE 1 MULLION (H) 3" x 3" (QMI-90)				TYPE 2 MULLION (H1) 3" x 3" W/INSERT (QMI-90)				TYPE 3 MULLION (H2) 3" x 3" W/(2) INSERTS (QMI-90)				TYPE 4 MULLION (H3) 3" x 3" W/(3) INSERTS (QMI-90)			
	MULLION SPACING				MULLION SPACING				MULLION SPACING				MULLION SPACING			
	≤ 3'-0"	3' TO 4'	4' TO 5'	5' TO 6'	≤ 3'-0"	3' TO 4'	4' TO 5'	5' TO 6'	≤ 3'-0"	3' TO 4'	4' TO 6'	6' TO 8'	≤ 3'-0"	3' TO 4'	4' TO 6'	6' TO 8'
40.0 OR LESS	9'-7"	8'-8"	8'-1"	8'-8"	9'-10"	8'-11"	8'-4"	9'-0"	10'-2"	9'-3"	9'-3"	8'-5"	10'-5"	9'-5"	9'-6"	8'-7"
45.0	9'-2"	8'-4"	7'-9"	8'-4"	9'-6"	8'-7"	8'-0"	8'-8"	9'-9"	8'-10"	8'-11"	8'-1"	10'-0"	9'-1"	9'-1"	8'-3"
50.0	8'-10"	8'-1"	7'-6"	8'-1"	9'-2"	8'-4"	7'-9"	8'-4"	9'-5"	8'-7"	8'-7"	7'-10"	9'-8"	8'-9"	8'-10"	8'-0"
55.0	8'-7"	7'-10"	7'-3"	7'-10"	8'-10"	8'-1"	7'-6"	8'-1"	9'-1"	8'-3"	8'-4"	7'-7"	9'-4"	8'-6"	8'-6"	7'-9"
60.0	8'-4"	7'-7"	7'-0"	7'-7"	8'-7"	7'-10"	7'-3"	7'-10"	8'-10"	8'-1"	8'-1"	7'-4"	9'-1"	8'-3"	8'-3"	7'-6"
65.0	8'-2"	7'-5"	6'-10"	7'-5"	8'-5"	7'-7"	7'-1"	7'-8"	8'-7"	7'-10"	7'-10"	7'-2"	8'-10"	8'-1"	8'-1"	7'-4"
70.0	7'-11"	7'-2"	6'-8"	7'-3"	8'-2"	7'-5"	6'-11"	7'-5"	8'-5"	7'-8"	7'-8"	7'-0"	8'-8"	7'-10"	7'-10"	7'-2"
75.0	7'-9"	7'-0"	6'-6"	7'-1"	8'-0"	7'-3"	6'-9"	7'-3"	8'-3"	7'-6"	7'-6"	6'-10"	8'-5"	7'-8"	7'-8"	7-0"
80.0	7'-7"	6'-11"	6'-5"	6'-11"	7'-10"	7'-1"	6'-7"	7'-2"	8'-1"	7'-4"	7'-4"	6'-8"	8'-3"	7'-6"	7'-6"	6'-10"
85.0	7'-5"	6'-9"	6'-3"	6'-9"	7'-8"	7'-0"	6'-6"	7'-0"	7'-11"	7'-2"	7'-2"	6'-6"	8'-1"	7'-4"	7'-5"	6'-8"
90.0	7'-4"	6'-8"	6'-2"	6'-8"	7'-6"	6'-10"	6'-4"	6'-10"	7'-9"	7'-0"	7'-1"	6'-5"	7'-11"	7'-3"	7'-3"	6'-7"
95.0	7'-2"	6'-6"	6'-0"	6'-6"	7'-5"	6'-9"	6'-3"	6'-9"	7'-7"	6'-11"	6'-11"	6'-3"	7'-10"	7'-1"	7'-1"	6'-5"
100.0	7'-0"	6'-5"	5'-11"	6'-5"	7'-3"	6'-7"	6'-1"	6'-7"	7'-6"	6'-9"	6'-10"	6'-2"	7'-8"	7'-0"	7'-0"	6'-4"
105.0	6'-11"	6'-4"	5'-10"	6'-4"	7'-2"	6'-6"	6'-0"	6'-6"	7'-4"	6'-8"	6'-8"	6'-1"	7'-7"	6'-10"	6'-10"	6'-3"
110.0	6'-10"	6'-2"	5'-9"	6'-3"	7'-0"	6'-5"	5'-11"	6'-5"	7'-3"	6'-7"	6'-7"	6'-0"	7'-5"	6'-9"	6'-9"	6'-2"
115.0	6'-9"	6'-1"	5'-8"	6'-1"	6'-11"	6'-4"	5'-10"	6'-4"	7'-2"	6'-6"	6'-6"	5'-11"	7'-4"	6'-8"	6'-8"	6'-1"
120.0	6'-8"	6'-0"	5'-7"	6'-0"	6'-10"	6'-3"	5'-9"	6'-3"	7'-0"	6'-5"	6'-5"	5'-10"	7'-3"	6'-7"	6'-7"	6'-0"

NOTES : REFER TO ELEVATIONS ON SHEET 1 OF 15

1-. FOR MULLIONS INSTALLED W/O STORM BARS

A) MULLION SPACING SHALL BE SUCH THAT MAXIMUM SLAT SPAN SHALL NOT BE EXCEEDED

2-. FOR MULLIONS INSTALLED W/ STORM BARS & HEADERS

A) MULLION SPACING SHALL BE SUCH THAT MAXIMUM HEADER SPAN SHALL NOT BE EXCEEDED

B) STORM BAR SPACING SHALL BE SUCH THAT MAXIMUM SLAT SPAN SHALL NOT BE EXCEEDED

PRODUCT REVISED
as complying with the Florida Building Code
Acceptance No 02-0126.03
Expiration Date 11/08/06
By
Miami Dade Product Control Division

MIAMI-DADE COUNTY

12/6/02

TILTECO INC.
TILLIT TESTING & ENGINEERING COMPANY
6595 N.W. 36th. St., Ste. 217, VIRGINIA GARDENS, FLORIDA 33166
Phone : (305)871-1530 . Fax : (305)871-1531
EB-0006719
WALTER A. TILLIT Jr., P. E.
FLORIDA Lic. # 44167

40 mm ROLL-UP SHUTTER

QMI ROLL SHUTTER
933 N. OAKLAWN AVE.
ELMHURST, IL. 60126

REV. NO	DESCRIPTION	DATE	REV. No	DESCRIPTION	DATE
1	OLD DWG No. 00-228	6/24/02	3	-	-
2	GENERAL	12/3/02	4	-	-

AS SHOWN
SCALE

6/24/02
DATE

02-362
DRAWING No

SHEET 13 OF 15

MULLION LOADING CHART

MAXIMUM DESIGN PRESSURE RATING "W" (p. s. f.) AND CORRESPONDING MAXIMUM SPAN "L" (Ft.) FOR A GIVEN TYPE OF MULLION AND MULLION SPACING (Ft.).

(USE NEGATIVE PRESSURE VALUES AS PER ASCE 7-98)

MAXIMUM DESIGN LOAD "W" (p.s.f.)	TYPE 5 MULLION (1) 3" x 4" (QMI-91)			TYPE 6 MULLION (11) 3" x 4" W/INSERT (QMI-91)			TYPE 7 MULLION (12) 3" x 4" W/(2) INSERTS (QMI-91)			TYPE 8 MULLION (13) 3" x 4" W/(3) INSERTS (QMI-91)				
	MULLION SPACING			MULLION SPACING			MULLION SPACING			MULLION SPACING				
	≤ 4'-0"	4' TO 5'	5' TO 6'	≤ 4'-0"	4' TO 5'	5' TO 6'	≤ 4'-0"	4' TO 5'	5' TO 8'	≤ 4'-0"	4' TO 5'	5' TO 8'	8' TO 10'	10' TO 12'
40.0 OR LESS	11'-9"	10'-10"	11'-9"	12'-1"	11'-2"	12'-1"	12'-5"	11'-6"	11'-4"	12'-9"	11'-10"	11'-7"	10'-9"	10'-2"
45.0	11'-3"	10'-5"	11'-3"	11'-7"	10'-9"	11'-8"	11'-11"	11'-1"	10'-10"	12'-3"	11'-4"	11'-2"	10'-4"	9'-9"
50.0	10'-10"	10'-1"	10'-11"	11'-2"	10'-5"	11'-3"	11'-6"	10'-8"	10'-6"	11'-10"	11'-0"	10'-9"	10'-0"	9'-5"
55.0	10'-6"	9'-9"	10'-7"	10'-10"	10'-1"	10'-11"	11'-2"	10'-4"	10'-2"	11'-5"	10'-7"	10'-5"	9'-8"	9'-1"
60.0	10'-3"	9'-6"	10'-3"	10'-6"	9'-9"	10'-7"	10'-10"	10'-1"	9'-10"	11'-1"	10'-4"	10'-2"	9'-5"	8'-10"
65.0	10'-0"	9'-3"	10'-0"	10'-3"	9'-6"	10'-4"	10'-7"	9'-10"	9'-7"	10'-10"	10'-1"	9'-10"	9'-2"	8'-7"
70.0	9'-9"	9'-0"	9'-9"	10'-0"	9'-4"	10'-0"	10'-3"	9'-7"	9'-5"	10'-7"	9'-10"	9'-7"	8'-11"	8'-5"
75.0	9'-6"	8'-10"	9'-6"	9'-9"	9'-1"	9'-10"	10'-1"	9'-4"	9'-2"	10'-4"	9'-7"	9'-5"	8'-9"	8'-3"
80.0	9'-4"	8'-8"	9'-4"	9'-7"	8'-11"	9'-7"	9'-10"	9'-2"	9'-0"	10'-1"	9'-4"	9'-2"	8'-6"	8'-0"
85.0	9'-1"	8'-5"	9'-2"	9'-5"	8'-9"	9'-5"	9'-8"	8'-11"	8'-9"	9'-11"	9'-2"	9'-0"	8'-4"	7'-11"
90.0	8'-11"	8'-4"	9'-0"	9'-2"	8'-7"	9'-3"	9'-6"	8'-9"	8'-7"	9'-8"	9'-0"	8'-10"	8'-3"	7'-9"
95.0	8'-9"	8'-2"	8'-10"	9'-1"	8'-5"	9'-1"	9'-4"	8'-8"	8'-6"	9'-6"	8'-10"	8'-8"	8'-1"	7'-7"
100.0	8'-8"	8'-0"	8'-8"	8'-11"	8'-3"	8'-11"	9'-2"	8'-6"	8'-4"	9'-4"	8'-8"	8'-6"	7'-11"	7'-6"
105.0	8'-6"	7'-11"	8'-6"	8'-9"	8'-1"	8'-9"	9'-0"	8'-4"	8'-2"	9'-3"	8'-7"	8'-5"	7'-10"	7'-4"
110.0	8'-4"	7'-9"	8'-5"	8'-7"	8'-0"	8'-8"	8'-10"	8'-3"	8'-1"	9'-1"	8'-5"	8'-3"	7'-8"	7'-3"
115.0	8'-3"	7'-8"	8'-3"	8'-6"	7'-11"	8'-6"	8'-9"	8'-1"	7'-11"	8'-11"	8'-4"	8'-2"	7'-7"	7'-1"
120.0	8'-1"	7'-6"	8'-2"	8'-4"	7'-9"	8'-5"	8'-7"	8'-0"	7'-10"	8'-10"	8'-2"	8'-0"	7'-6"	7'-0"

PRODUCT REVISED
as complying with the Florida Building Code
Acceptance No 02-0726.03
Expiration Date 11/08/06
By
Miami Dade Product Control Division

NOTES : REFER TO ELEVATIONS ON SHEET 1 OF 15

1-. FOR MULLIONS INSTALLED W/O STORM BARS

A) MULLION SPACING SHALL BE SUCH THAT MAXIMUM SLAT SPAN SHALL NOT BE EXCEEDED

2-. FOR MULLIONS INSTALLED W/ STORM BARS & HEADERS

A) MULLION SPACING SHALL BE SUCH THAT MAXIMUM HEADER SPAN SHALL NOT BE EXCEEDED

B) STORM BAR SPACING SHALL BE SUCH THAT MAXIMUM SLAT SPAN SHALL NOT BE EXCEEDED

12/6/02

MIAMI-DADE COUNTY

TILLIT TESTING & ENGINEERING COMPANY
8595 N.W. 38th. St., Ste. 217, VIRGINIA GARDENS, FLORIDA 33166
Phone : (305)871-1530 : Fax : (305)871-1331
EB-0006719
WALTER A. TILLIT Jr., P. E.
FLORIDA Lic. # 44167

40 mm ROLL-UP SHUTTER

QMI ROLL SHUTTER
933 N. OAKLAWN AVE.
ELMHURST, IL. 60126

REV. NO	DESCRIPTION	DATE	REV. No	DESCRIPTION	DATE
1	OLD DWG No. 00-228	6/24/02	3	-	-
2	GENERAL	12/3/02	4	-	-

AS SHOWN
SCALE

6/24/02
DATE

02-362
DRAWING No

MULLION LOADING CHART

MAXIMUM DESIGN PRESSURE RATING "W" (p. s. f.) AND CORRESPONDING MAXIMUM SPAN "L" (Ft.) FOR A GIVEN TYPE OF MULLION AND MULLION SPACING (Ft.).

(USE NEGATIVE PRESSURE VALUES AS PER ASCE 7-98)

MAXIMUM DESIGN LOAD "W" (p.s.f.)	TYPE 9 MULLION (J) 3" x 6" (QMI-92)					TYPE 10 MULLION (J1) 3" x 6" W/INSERT (QMI-92)					TYPE 11 MULLION (J2) 3" x 6" W/(2) INSERTS (QMI-92)					TYPE 12 MULLION (J3) 3" x 6" W/(3) INSERTS (QMI-92)				
	MULLION SPACING					MULLION SPACING					MULLION SPACING					MULLION SPACING				
	≤ 4'-0"	4' TO 5'	5' TO 8'	8' TO 10'	10' TO 12'	< 4'-0"	4' TO 5'	5' TO 8'	8' TO 10'	10' TO 12'	< 4'-0"	4' TO 5'	5' TO 8'	8' TO 10'	10' TO 12'	< 4'-0"	4' TO 5'	5' TO 8'	8' TO 10'	10' TO 12'
40.0 OR LESS	16'-1"	14'-11"	14'-8"	13'-7"	12'-10"	17'-0"	15'-9"	15'-5"	14'-4"	13'-6"	17'-9"	16'-6"	16'-2"	15'-0"	14'-1"	18'-5"	17'-1"	16'-10"	15'-7"	14'-8"
45.0	15'-6"	14'-5"	14'-1"	13'-1"	12'-4"	16'-4"	15'-2"	14'-10"	13'-10"	13'-0"	17'-1"	15'-10"	15'-6"	14'-5"	13'-7"	17'-9"	16'-6"	16'-2"	15'-0"	14'-1"
50.0	14'-11"	13'-11"	13'-7"	12'-8"	11'-11"	15'-9"	14'-7"	14'-4"	13'-4"	12'-6"	16'-6"	15'-3"	15'-0"	13'-11"	13'-1"	17'-1"	15'-11"	15'-7"	14'-6"	13'-8"
55.0	14'-6"	13'-5"	13'-2"	12'-3"	11'-6"	15'-3"	14'-2"	13'-11"	12'-11"	12'-2"	15'-11"	14'-10"	14'-6"	13'-6"	12'-8"	16'-7"	15'-5"	15'-1"	14'-0"	13'-2"
60.0	14'-1"	13'-1"	12'-10"	11'-11"	11'-2"	14'-10"	13'-9"	13'-6"	12'-6"	11'-10"	15'-6"	14'-5"	14'-1"	13'-1"	12'-4"	16'-1"	15'-0"	14'-8"	13'-8"	12'-10"
65.0	13'-8"	12'-9"	12'-6"	11'-7"	10'-11"	14'-5"	13'-5"	13'-2"	12'-2"	11'-6"	15'-1"	14'-0"	13'-9"	12'-9"	12'-0"	15'-8"	14'-7"	14'-4"	13'-3"	12'-6"
70.0	13'-4"	12'-5"	12'-2"	11'-4"	10'-8"	14'-1"	13'-1"	12'-10"	11'-11"	11'-2"	14'-9"	13'-8"	13'-5"	12'-5"	11'-9"	15'-4"	14'-3"	13'-11"	12'-11"	12'-2"
75.0	13'-1"	12'-2"	11'-11"	11'-1"	10'-5"	13'-9"	12'-9"	12'-6"	11'-8"	10'-11"	14'-5"	13'-4"	13'-1"	12'-2"	11'-5"	15'-0"	13'-11"	13'-8"	12'-8"	11'-11"
80.0	12'-9"	11'-10"	11'-8"	10'-10"	10'-2"	13'-6"	12'-6"	12'-3"	11'-5"	10'-9"	14'-1"	13'-1"	12'-10"	11'-11"	11'-2"	14'-8"	13'-7"	13'-4"	12'-5"	11'-8"
85.0	12'-6"	11'-8"	11'-5"	10'-7"	10'-0"	13'-2"	12'-3"	12'-0"	11'-2"	10'-6"	13'-10"	12'-10"	12'-7"	11'-8"	11'-0"	14'-4"	13'-4"	13'-1"	12'-2"	11'-5"
90.0	12'-4"	11'-5"	11'-2"	10'-5"	9'-9"	12'-11"	12'-0"	11'-10"	10'-11"	10'-4"	13'-6"	12'-7"	12'-4"	11'-5"	10'-9"	14'-1"	13'-1"	12'-10"	11'-11"	11'-2"
95.0	12'-1"	11'-2"	11'-0"	10'-3"	9'-7"	12'-9"	11'-10"	11'-7"	10'-9"	10'-1"	13'-4"	12'-4"	12'-1"	11'-3"	10'-7"	13'-10"	12'-10"	12'-7"	11'-8"	11'-0"
100.0	11'-10"	11'-0"	10'-10"	10'-0"	9'-5"	12'-6"	11'-7"	11'-5"	10'-7"	9'-11"	13'-1"	12'-2"	11'-11"	11'-1"	10'-5"	13'-7"	12'-7"	12'-5"	11'-6"	10'-10"
105.0	11'-8"	10'-10"	10'-8"	9'-11"	9'-4"	12'-4"	11'-5"	11'-2"	10'-5"	9'-9"	12'-10"	11'-11"	11'-9"	10'-10"	10'-3"	13'-4"	12'-5"	12'-2"	11'-4"	10'-8"
110.0	11'-6"	10'-8"	10'-6"	9'-9"	9'-2"	12'-1"	11'-3"	11'-0"	10'-3"	9'-8"	12'-8"	11'-9"	11'-6"	10'-8"	10'-1"	13'-2"	12'-3"	12'-0"	11'-2"	10'-6"
115.0	11'-4"	10'-6"	10'-4"	9'-7"	9'-0"	11'-11"	11'-1"	10'-10"	10'-1"	9'-6"	12'-6"	11'-7"	11'-4"	10'-7"	9'-11"	13'-0"	12'-1"	11'-10"	11'-0"	10'-4"
120.0	11'-2"	10'-4"	10'-2"	9'-5"	8'-11"	11'-9"	10'-11"	10'-9"	9'-11"	9'-4"	12'-4"	11'-5"	11'-2"	10'-5"	9'-9"	12'-9"	11'-10"	11'-8"	10'-10"	10'-2"

NOTES : REFER TO ELEVATIONS ON SHEET 1 OF 15

1-. FOR MULLIONS INSTALLED W/O STORM BARS

A) MULLION SPACING SHALL BE SUCH THAT MAXIMUM SLAT SPAN SHALL NOT BE EXCEEDED

2-. FOR MULLIONS INSTALLED W/ STORM BARS & HEADERS

A) MULLION SPACING SHALL BE SUCH THAT MAXIMUM HEADER SPAN SHALL NOT BE EXCEEDED

B) STORM BAR SPACING SHALL BE SUCH THAT MAXIMUM SLAT SPAN SHALL NOT BE EXCEEDED

SIDE RAIL ANCHOR SCHEDULE

MAXIMUM DESIGN PRESSURE RATING "W" (p.s.f.) AND CORRESPONDING MAXIMUM ANCHOR (in) SCHEDULE FOR SIDE RAIL (B) CONNECTION TO C.B.S. OR CONCRETE

MAXIMUM DESIGN LOAD "W" (p.s.f.)		(B)		
		WALL MOUNT	SIDE WALL MOUNT	& BUILD-OUT MOUNT
70.0 OR LESS	POURED CONCRETE	6"	6"	6"
	MASONRY	6"	6"	6"
>70.0 TO 120.0	POURED CONCRETE	6"	6"	6"
	MASONRY	6"	5"	6"

MAXIMUM ANCHOR SPACING (in.) AT SIDE RAILS VERSUS EDGE DISTANCE = E. D.

* MAXIMUM ANCHOR SPACINGS ARE VALID FOR 3 1/2" EDGE DISTANCE. FOR E. D. LESS THAN 3 1/2", REDUCE ANCHOR SPACING BY MULTIPLYING SPACING SHOWN ON SCHEDULE BY THE FOLLOWING FACTORS.
FOR THIS OPERATION TO BE POSSIBLE, REDUCED SPACING OBTAINED USING FACTOR SHALL NOT BE LESS THAN 3" O.C.

ACTUAL E. D.	FACTOR
3"	.86
2 1/2"	.71
2"	.50

PRODUCT REVISED
as complying with the Florida Building Code
Acceptance No 02-0726.03
Expiration Date 11/08/06
By
Miami Dade Product Control Division

MIAMI-DADE COUNTY

TILLIT TESTING & ENGINEERING COMPANY
8595 N.W. 38th. St., Ste. 217, VIRGINIA GARDENS, FLORIDA 33166
Phone : (305)871-1530 . Fax : (305)871-1531
EB-0006719
WALTER A. TILLIT Jr., P. E.
FLORIDA Lic. # 44167

40 mm ROLL-UP SHUTTER

QMI ROLL SHUTTER
933 N. OAKLAWN AVE.
ELMHURST, IL 60126

REV. NO	DESCRIPTION	DATE	REV. No	DESCRIPTION	DATE
1	OLD DWG No. 00-228	5/24/02	3	-	-
2	GENERAL	12/3/02	4	-	-

AS SHOWN
SCALE

6/24/02
DATE

02-362
DRAWING No

SHEET 15 OF 15