MIAMI-DADE

BUILDING CODE COMPLIANCE OFFICE (BCCO)
PRODUCT CONTROL DIVISION

MIAMI-DADE COUNTY, FLORIDA
METRO-DADE FLAGLER BUILDING
140 WEST FLAGLER STREET, SUITE 1603
MIAMI, FLORIDA 33130-1563
(305) 375-2901 FAX (305) 375-2908

NOTICE OF ACCEPTANCE (NOA)

PGT Industries
1070 Technology Drive
Nokomis, FL 34275

SCOPE:
This NOA is being issued under the applicable rules and regulations governing the use of construction materials. The documentation submitted has been reviewed by Miami-Dade County Product Control Division and accepted by the Board of Rules and Appeals (BORA) to be used in Miami Dade County and other areas where allowed by the Authority Having Jurisdiction (AHJ).

This NOA shall not be valid after the expiration date stated below. The Miami-Dade County Product Control Division (In Miami Dade County) and/or the AHJ (in areas other than Miami Dade County) reserve the right to have this product or material tested for quality assurance purposes. If this product or material fails to perform in the accepted manner, the manufacturer will incur the expense of such testing and the AHJ may immediately revoke, modify, or suspend the use of such product or material within their jurisdiction. BORA reserves the right to revoke this acceptance, if it is determined by Miami-Dade County Product Control Division that this product or material fails to meet the requirements of the applicable building code.

This product is approved as described herein, and has been designed to comply with the High Velocity Hurricane Zone of the Florida Building Code.

DESCRIPTION: Series HR-810 Mid-Rise Aluminum Horizontal Roller Window – Small Missile Impact

APPROVAL DOCUMENT: Drawing No. **4121-2**, dated 07/30/02, with revision C dated 12/30/02, titled "Mid-Rise, Alum., Horizontal Roller", Sheets 1 through 5, prepared by manufacturer, signed and sealed by Robert L. Clark, P.E., bearing the Miami-Dade County Product Control Approval stamp with the Notice of Acceptance number and approval date by the Miami-Dade County Product Control Division.

MISSILE IMPACT RATING: Small Missile Impact Resistant

LABELING: Each unit shall bear a permanent label with the manufacturer's name or logo, city, state and following statement: "Miami-Dade County Product Control Approved", unless otherwise noted herein.

RENEWAL of this NOA shall be considered after a renewal application has been filed and there has been no change in the applicable building code negatively affecting the performance of this product.

TERMINATION of this NOA will occur after the expiration date or if there has been a revision or change in the materials, use, and/or manufacture of the product or process. Misuse of this NOA as an endorsement of any product, for sales, advertising or any other purposes shall automatically terminate this NOA. Failure to comply with any section of this NOA shall be cause for termination and removal of NOA.

ADVERTISEMENT: The NOA number preceded by the words Miami-Dade County, Florida, and followed by the expiration date may be displayed in advertising literature. If any portion of the NOA is displayed, then it shall be done in its entirety.

INSPECTION: A copy of this entire NOA shall be provided to the user by the manufacturer or its distributors and shall be available for inspection at the job site at the request of the Building Official.
This NOA consists of this page 1 as well as approval document mentioned above.
The submitted documentation was reviewed by **Manuel Perez, P.E.**

PRODUCT CONTROL ACCEPTED

SEE SHEET 2 FOR SECTION DETAILS

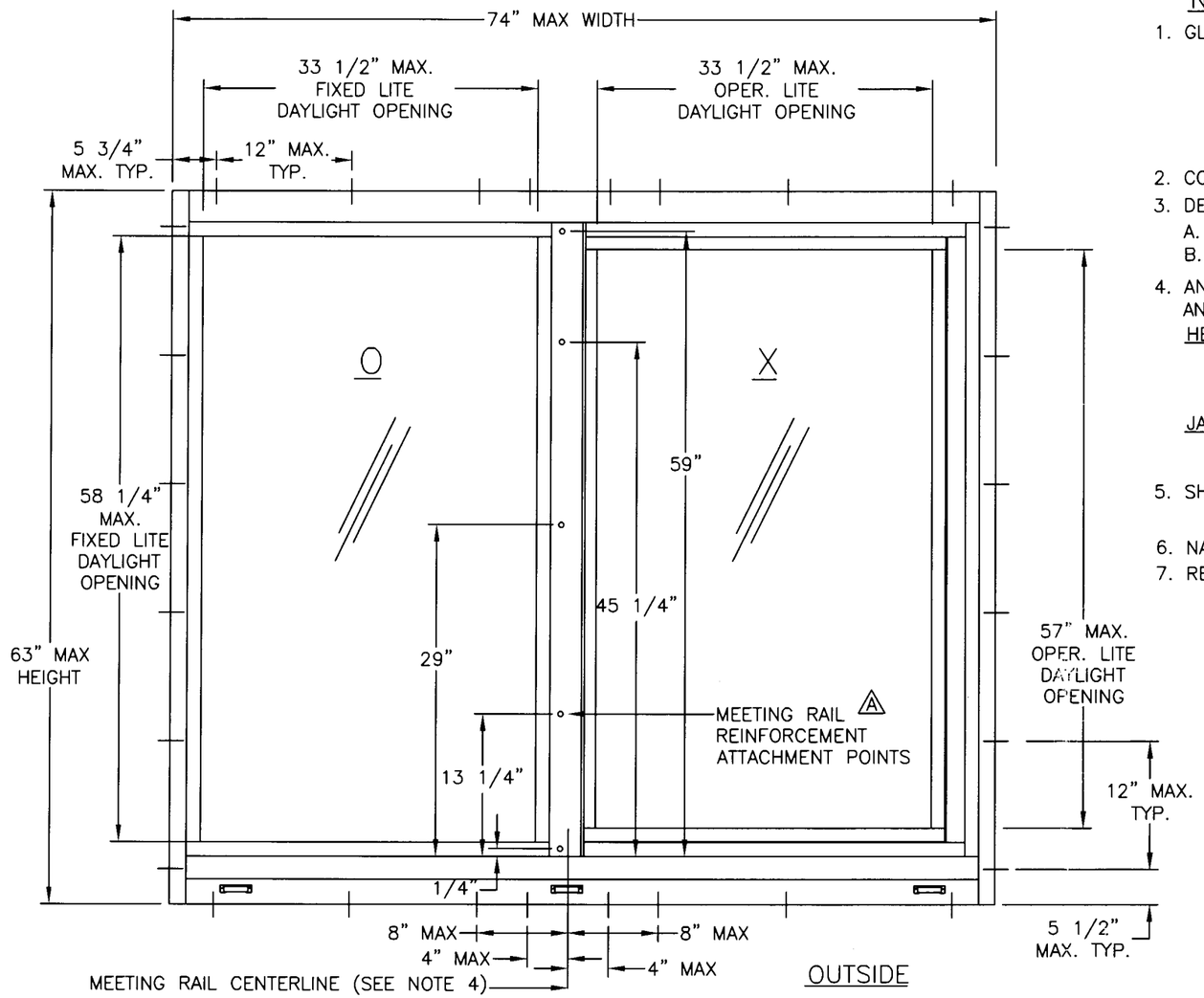

NOTES: SMALL MISSILE IMPACT WINDOW

1. GLAZING: A – 7/16" LAMINATED GLASS, PARTS LIST ITEM 29, COMPRISED OF (2) LITES OF 3/16" ANNEALED GLASS WITH AN .090 INTERLAYER OF DUPONT BUTACITE PVB OR SENTRY GLASS PLUS.
   B – 7/16" LAMINATED GLASS, PARTS LIST ITEM 43, COMPRISED OF (2) LITES OF 3/16" HEAT STRENGTHENED GLASS WITH AN .090 INTERLAYER OF DUPONT BUTACITE PVB OR SENTRY GLASS PLUS.
2. CONFIGURATIONS: OX, XO
3. DESIGN PRESSURE RATING: SEE TABLE 1.
   A. NEGATIVE DESIGN LOADS BASED ON TESTED PRESSURE & GLASS TABLES ASTM E 1300–98.
   B. POSITIVE DESIGN LOADS BASED ON WATER TEST PRESSURE & GLASS TABLES ASTM E 1300–98.
4. ANCHORAGE: SINGLE ROW OF 1/4" TAPCONS LOCATED AS FOLLOWS & PER SHEET.
   ANCHORING WITH WOOD SCREWS AT SAME LOCATIONS LIMITS PRESSURE RATING. (SEE TABLE 1.)
   HEAD & SILL:
   MAX. 5 3/4" FROM CORNERS.
   MAX. 4" & 8" ON EACH SIDE OF MEETING RAIL CENTERLINE.
   MAX. 12" SPACING.
   JAMBS:
   MAX. 5 1/2" FROM CORNERS.
   MAX. 12" SPACING.
5. SHUTTER REQUIREMENT: MIAMI–DADE COUNTY APPROVED SHUTTERS ARE REQUIRED AT INSTALLATIONS BELOW 30 FT. (NON REQUIRED AT INSTALLATIONS ABOVE GRADE)
6. NARROW JOINT SEALANT IS USED ON ALL 4 CORNERS OF THE FRAME.
7. REFERENCE TEST REPORT: FTL–3373

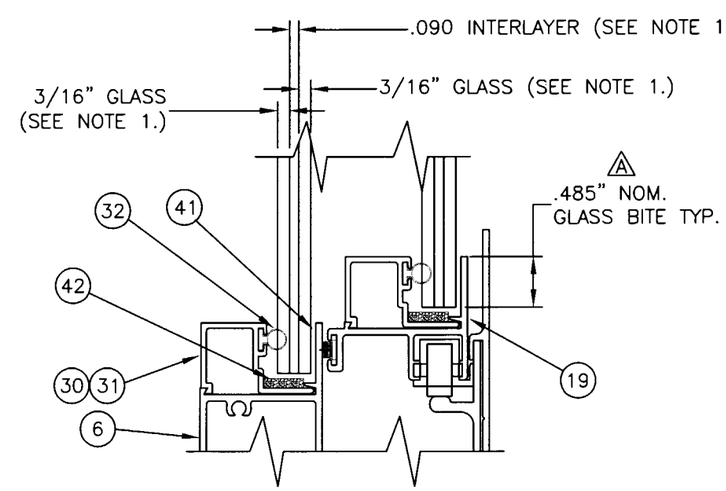

GLAZING DETAIL

DESIGN PRESSURE – TABLE 1.

DESIGN PRESSURE RATING GLASS TYPE B - 7/16" LAMI HEAT STRENGTHENED - SEE NOTE 1	NEG	POS
ALL SIZES TO 74.000 WIDE x 63.000 HIGH	-150.0	90.0

C

COMPARATIVE ANALYSIS FOR: GLASS TYPE A - 7/16" LAMI ANNEALED - SEE NOTE 1

	WINDOW HEIGHT											
WINDOW	35.250		38.375		44.000		50.625		54.000		63.000	
WIDTH	NEG	POS	NEG	POS	NEG	POS	NEG	POS	NEG	POS	NEG	POS
41.750	-150.0	90.0	-150.0	90.0	-150.0	90.0	-150.0	90.0	-150.0	90.0	-150.0	90.0
42.000	-150.0	90.0	-150.0	90.0	-150.0	90.0	-150.0	90.0	-150.0	90.0	-120.0	90.0
53.125	-150.0	90.0	-150.0	90.0	-150.0	90.0	-120.0	90.0	-120.0	90.0	-120.0	90.0
60.000	-150.0	90.0	-150.0	90.0	-120.0	90.0	-120.0	90.0	-120.0	90.0	-108.0	90.0
66.000	-150.0	90.0	-150.0	90.0	-120.0	90.0	-116.1	90.0	-108.1	90.0	-92.6	90.0
74.000	-150.0	90.0	-120.0	90.0	-117.9	90.0	-99.5	90.0	-92.1	90.0	-78.4	78.4

DESIGN PRESSURE RATING LIMITATION W/ ALTERNATE ANCHORAGE			
	#14 WOOD SCREWS	-130.0	90.0
	#12 WOOD SCREWS	-113.0	90.0

12/30/02
Robert L. Clark, P.E.
PE #39712
Structural

PGT INDUSTRIES
1070 TECHNOLOGY DRIVE
NOKOMIS, FL 34275
P.O. BOX 1529
NOKOMIS, FL 34274

Revsd By:	Date:	Revisions:
L.T.	12/30/02	C–CHART LABEL CHG
F.K.	10/23/02	B–NO CHG THIS SHT
Drawn By: F.K.	Date: 7/30/02	

Approved as complying with the Florida Buiding Code
Date JAN. 2, 2003
NOA# 02-0809.01
Miami Dade Product Control Division
By Manuel Perez

Description: ELEVATION & GLAZING DETAIL (SM MISSILE)

Title: MID–RISE, ALUM. HORIZONTAL ROLLER

Series/Model:	Scale:	Sheet:	Drawing No.	Rev:
HR–810	NTS	1 of 5	4121–2	C

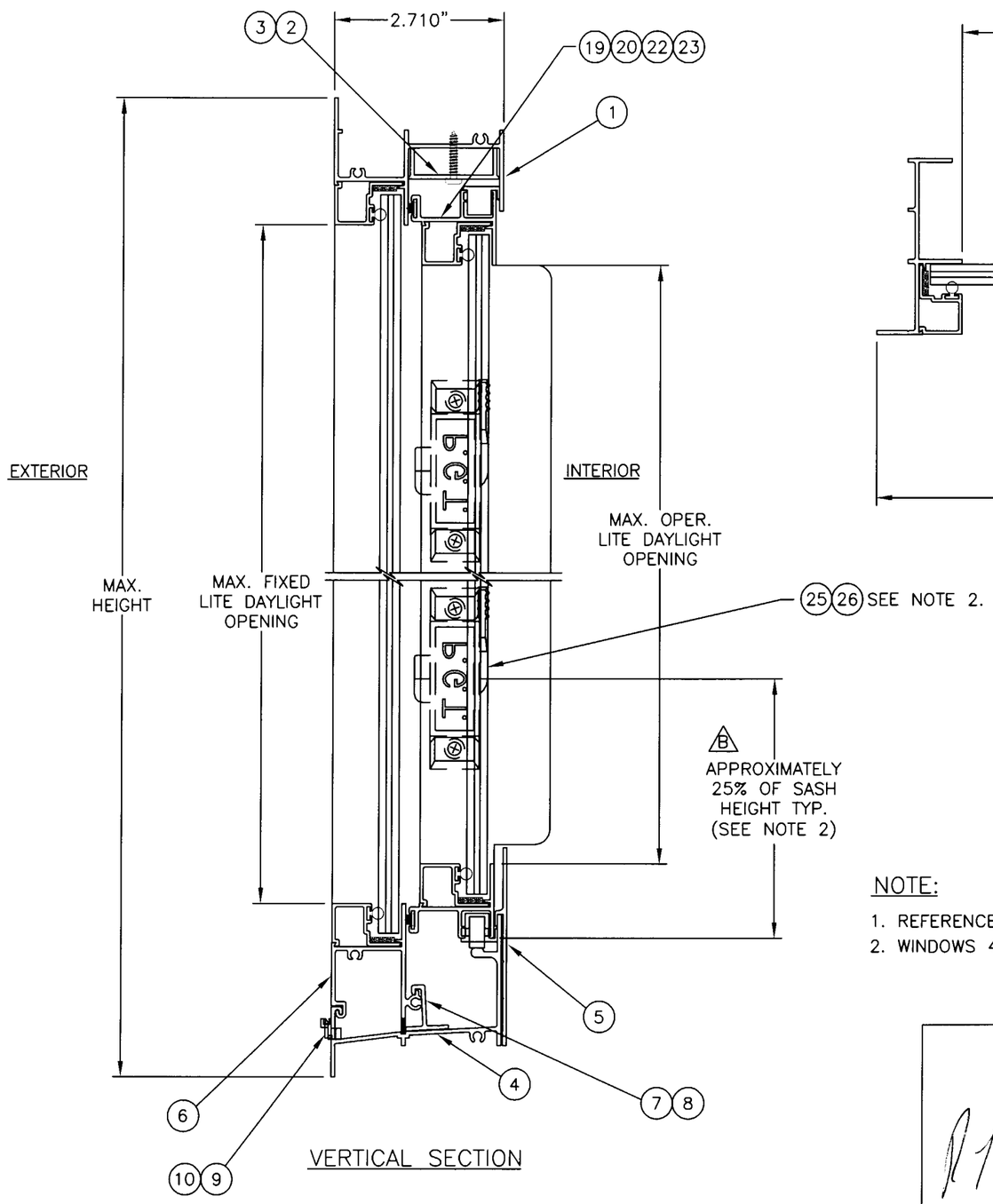

VERTICAL SECTION

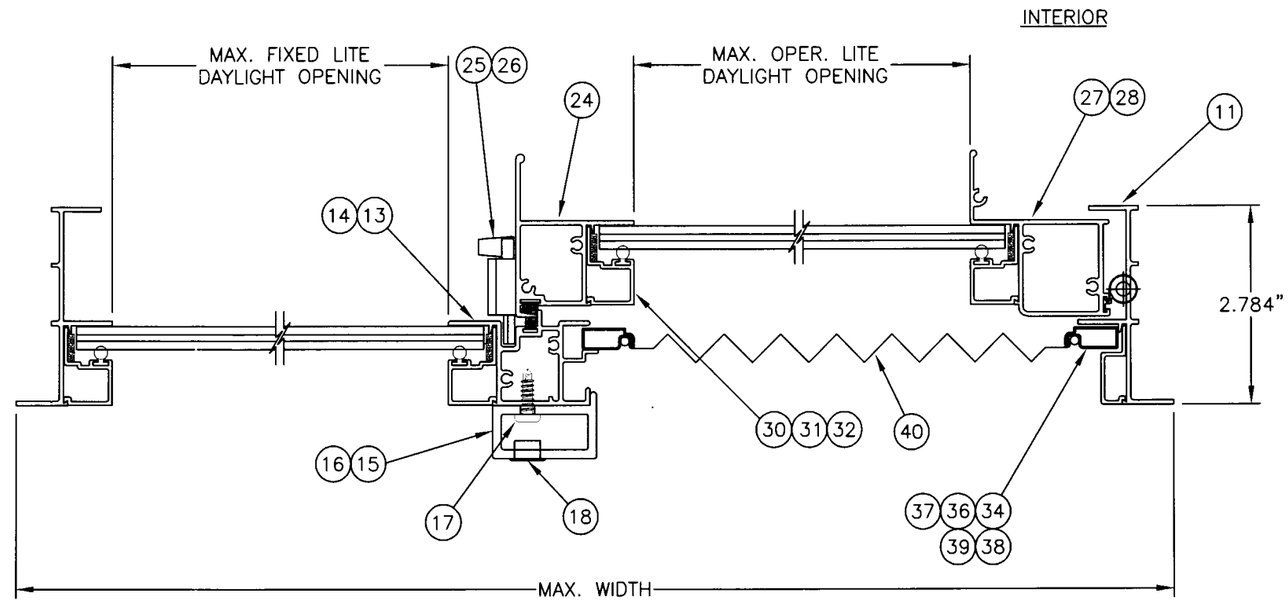

HORIZONTAL SECTION

A

NOTE:

1. REFERENCE TEST REPORTS: FTL-3373
2. WINDOWS 42" HIGH OR LESS REQUIRE (1) ONLY, ITEM 25, SWEEP LATCH CENTERED VERTICALLY.

Approved as complying with the Florida Building Code
Date JAN. 2, 2003
NOA# 02-0809.01
Miami Dade Product Control Division
By

12/30/02
Robert L. Clark, P.E.
PE #39712
Structural

PGT INDUSTRIES

1070 TECHNOLOGY DRIVE
NOKOMIS, FL 34275

P.O. BOX 1529
NOKOMIS, FL 34274

Revsd By:	Date:	Revisions:
LT.	12/30/02	C-NO CHG THIS SHT
F.K.	10/23/02	B-CHG LATCH DIM.
Drawn By: F.K.	Date: 7/30/02	

Description: VERTICAL & HORIZONTAL SECTIONS

Title: MID-RISE, ALUM. HORIZONTAL ROLLER

Series/Model:	Scale:	Sheet:	Drawing No.	Rev:
HR-810	NTS	2 of 5	4121-2	C

ITEM	DWG #	DESCRIPTION	VENDOR	PGT#
1	4102	Flange Frame Head	6063-T5	612237
2	4025	Sash Stop (Std.)	6063-T5	612244
3		#8 x 3/4 PH. PAN HEAD TEK		7834PW,B
4	4103	Flange Frame Sill	6063-T5	612238
5	4361	3.500" Sill Add On	6063-T5	64361
6	4104	Frame Sill Adapter	6063-T5	612239
7	4125	Windload Adapter	6063-T6	64125 B
8		#6 x .375 Ph. Pn. TEK S. Stl	S. STL	
9	1094	Weep Housing	NYLON 6/6	70250
10	1095	Weep Flap	NYLON 6/6	70251
11	4002	Flange Frame Jamb	6063-T5	612225
12	1155-1	#8 x 1.000 Quad Pn. SMS S. Stl.	S. STL	781PQX
13	4005	Fixed Meeting Rail	6063HS-T54	612228
14	1060	Wstp.,.187 x .230, fin seal		61060G
15	4063	Meeting Rail Reinf. Tube .75 x 1.50	6061-T6	64063
16	4064	Meet. Rail Reinf. Tube End Cap	NYLON 6/6	44064
17	1179	#10 x 3/4" Phillips Pan Head Tek	S. STL	710x34PPSDX
18	947	Dia. 3/8" Hole Plug	Polypropylene	41722
19	4105	Sash Top and Bottom Rail	6063-T5	612240
20	1235	Wstp.,.170 x .270 back, fin seal		67S16G
22	1092	Roller Housing & Guide	NYLON 6/6	70312
23	226	Brass Roller Wheels	BRASS	7BRWHL2
24	4054	Sash Meeting Rail	6063HS-T54	64054
25	1096	Sweep Latch	DIE-CAST	71096
26	1016	#8 x .625 Ph. Fl. SMS	STL.	7858BB
27	4007	Sash Side Rail	6063-T5	612230
28	4119	Wstp. Bulb w/closed cell foam Ultrafab		64120
29		Glass 7/16 Laminated (3/16 Annealed, .090 DuPont Butacite PVB, 3/16 Annealed)		
30	985	Glazing Bead 7/16 Lami w/Grill Kit	6063-T5	6985
31	4222A	Glazing Bead 7/16 Lami	6063-T5	64222
32	1224	Vinyl Bulb Weatherstrip "Thick"	VINYL	TP-247
34	1014	Screen Frame	3105 H14	61011
36	1013	Screen Corner Key	Polypropylene	49103
37	1073	Screen Spring	S. STL	78835
38	1278	Screen Pull Tab	Elastometric PVC	70409
39	1008	Screen Spline	Elastometric PVC	68535
40		Screen Cloth		61816
41		Silicon Adhesive - Dow 899, Dow 995 or Dow 983		
42		Setting Block (3/32x25/64x1)		71622
43		Glass 7/16 Laminated (3/16 Heat Strengthened, .090 Sentry Glass Plus, 3/16 Heat Strengthened)		

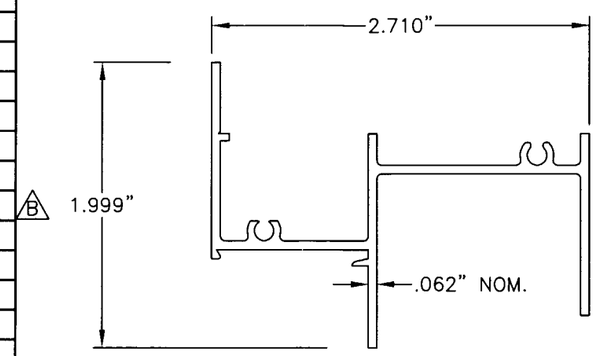

1 FRAME HEAD
MAT'L: 6063-T5
DWG #4102

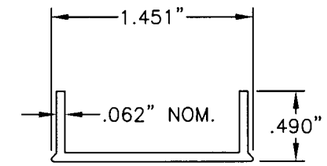

2 SASH STOP
MAT'L: 6063-T5
DWG #4025

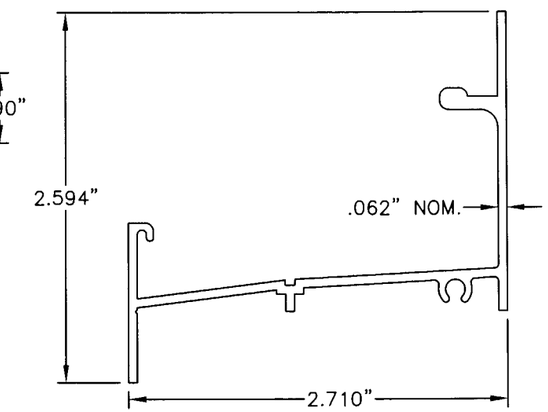

4 FRAME SILL
MAT'L: 6063-T5
DWG #4103A

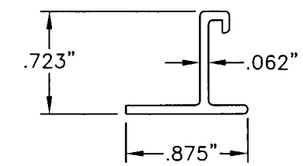

7 WINDLOAD ADAPTER
MAT'L: 6063-T6
DWG #4125 B

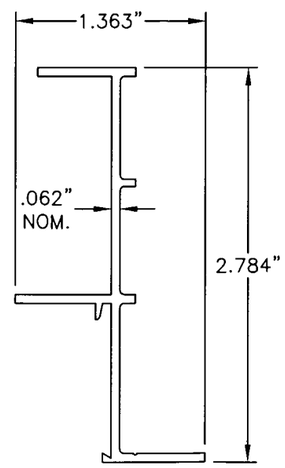

11 FRAME JAMB
MAT'L: 6063-T5
DWG #4002

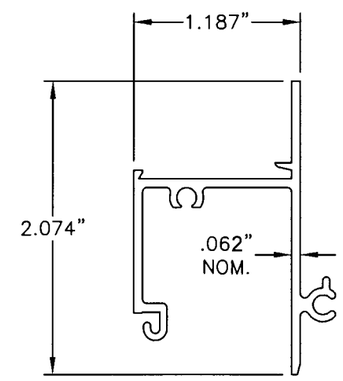

6 FRAME SILL ADAPT.
MAT'L: 6063-T5
DWG #4104

A

NOTE:

1. REFERENCE TEST REPORT: FTL-3373

Robert L. Clark, P.E.
PE #39712
Structural
12/30/02

PGT INDUSTRIES

1070 TECHNOLOGY DRIVE
NOKOMIS, FL 34275

P.O. BOX 1529
NOKOMIS, FL 34274

Revsd By:	Date:	Revisions:
L.T.	12/30/02	C-NO CHG THIS SHT
F.K.	10/23/02	B-CORRECT ITEM 7
Drawn By: F.K.	Date: 7/30/02	

Approved as complying with the Florida Building Code
Date JAN. 2 2003
NOA# 02-0809.01
Miami Dade Product Control Division
By Manuel Perez

Description: PARTS LIST & EXTRUSION PROFILES

Title: MID-RISE, ALUM. HORIZONTAL ROLLER

Series/Model:	Scale:	Sheet:	Drawing No.	Rev:
HR-810	NTS	3 of 5	4121-2	C

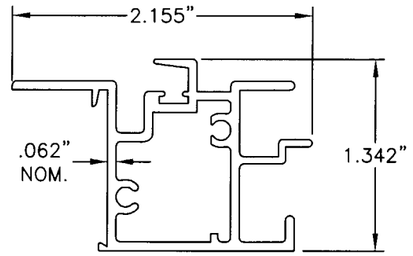

(13) FIXED MEET. RAIL
MAT'L: 6063HS-T54
DWG #4005

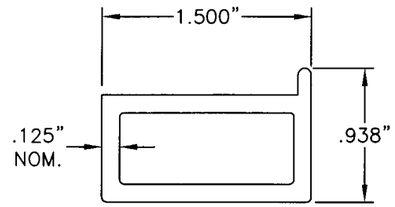

(15) FXD. MEET. RAIL REINFORCEMENT TUBE
MAT'L: 6063HS-T54
DWG #4063

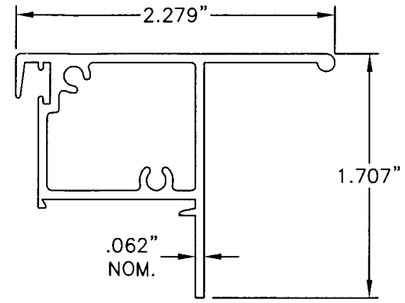

(24) SASH MEET. RAIL
MAT'L: 6063HS-T54
DWG #4006C

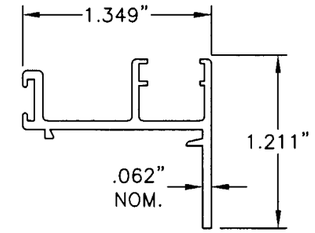

(19) (21) SASH TOP & BOTT. RAIL
MAT'L: 6063-T5
DWG #4105

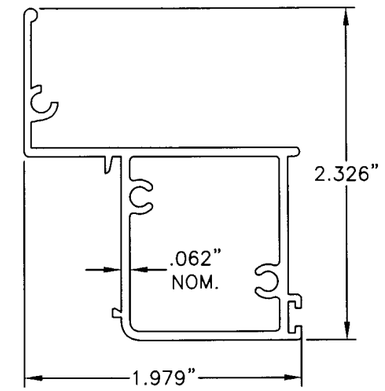

(27) SASH SIDE RAIL
MAT'L: 6063-T5
DWG #4007

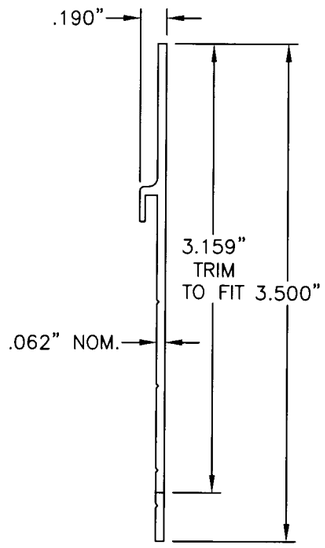

(5) 3.50" SILL ADD ON
MAT'L: 6063-T5
DWG #4361

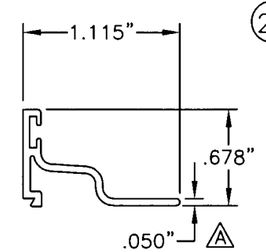

(30) 7/16 LAMI BEAD W/GRILL KIT
MAT'L: 6063-T5
DWG #985

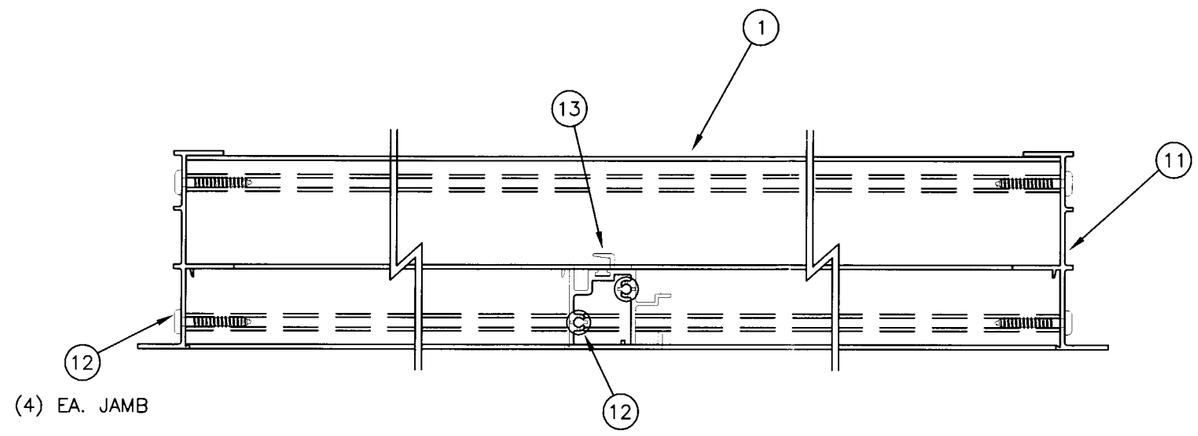

(4) EA. JAMB

(2) EA. HEAD & SILL

FRAME CORNER & MEETING RAIL CONSTRUCTION A

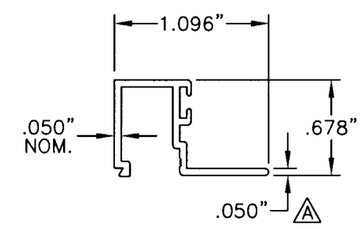

(31) 7/16 LAMI BEAD
MAT'L: 6063-T5
DWG #4222A

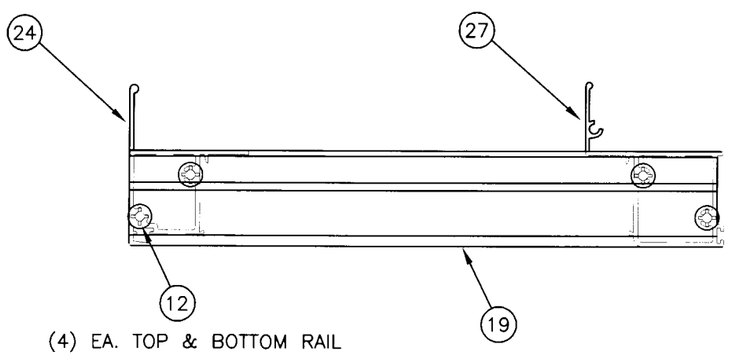

(4) EA. TOP & BOTTOM RAIL

SASH CORNER CONSTRUCTION A

NOTE:

1. REFERENCE TEST REPORT: FTL-3373

Approved as complying with the Florida Buiding Code
Date JAN. 2, 2003
NOA# 02-0809.01
Miami Dade Product Control Division
By Manuel Perez

Robert L. Clark, P.E.
PE #39712
Structural
12/30/02

PGT INDUSTRIES

1070 TECHNOLOGY DRIVE
NOKOMIS, FL 34275

P.O. BOX 1529
NOKOMIS, FL 34274

Revsd By:	Date:	Revisions:
L.T.	12/30/02	C-NO CHG THIS SHT
F.K.	10/23/02	B-NO CHG THIS SHT
Drawn By: F.K.	Date: 7/30/02	

Description: EXTRUSION & CORNER CONSTRUCTION DETAILS

Title: MID-RISE, ALUM. HORIZONTAL ROLLER

Series/Model:	Scale:	Sheet:	Drawing No.	Rev:
HR-810	NTS	4 of 5	4121-2	C

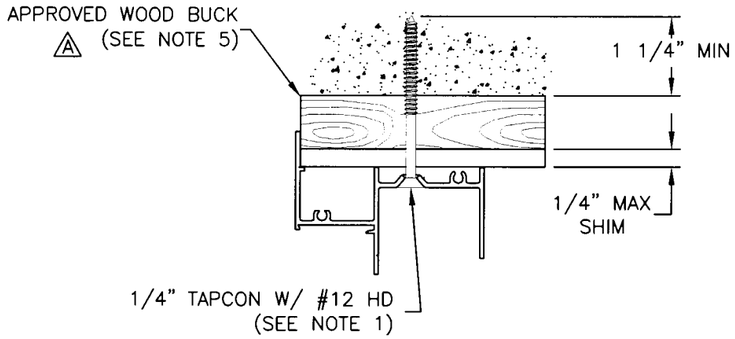

TYPICAL HEAD SECTION
SUBSTRATE ANCHORING

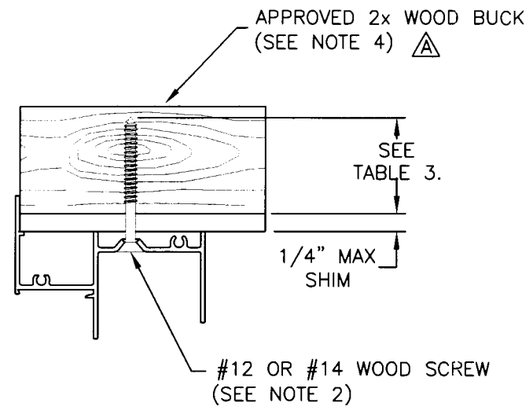

TYPICAL HEAD SECTION
WOOD ANCHORING

TABLE 3.
WOOD SCREW EMBEDMENT

MINIMUM EMBEDMENT DIMENSION	
#12 SCREW	#14 SCREW
1 1/2"	1 3/4"

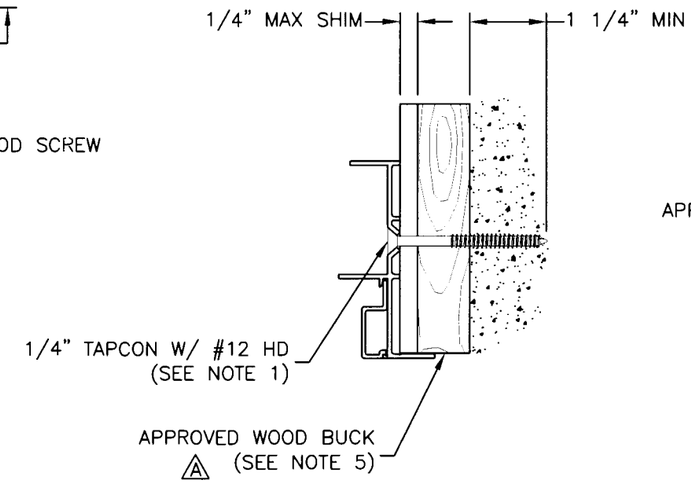

TYPICAL JAMB SECTION
SUBSTRATE ANCHORING

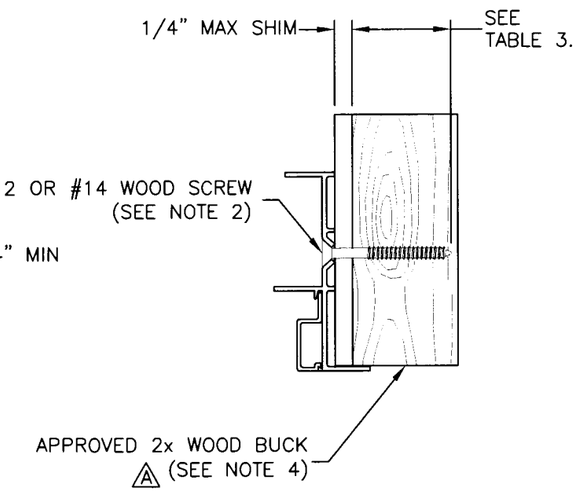

TYPICAL JAMB SECTION
WOOD ANCHORING

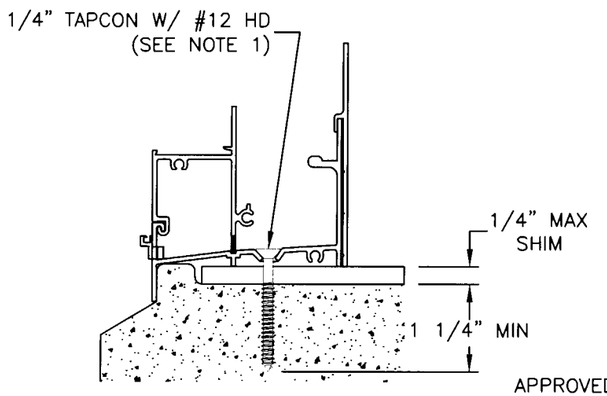

TYPICAL SILL SECTION
SUBSTRATE ANCHORING

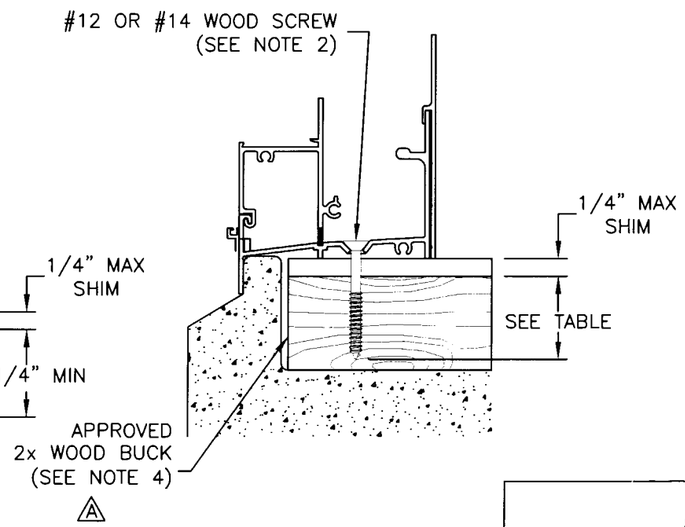

TYPICAL SILL SECTION
WOOD ANCHORING

NOTES:

1. USE ONLY MIAMI-DADE COUNTY APPROVED ELCO OR ITW TAPCONS.
2. SEE SHEET 1 OF 5 FOR PRESSURE LIMITATIONS WHEN ANCHORING WITH WOOD SCREWS.
3. REFERENCE TEST REPORT: FTL-3373
4. INSTALLATION OF 2x WOOD BUCK TO THE SUBSTRATE ENGINEERED SEPARATELY AND TO BE REVIEWED BY BUILDING OFFICIAL.
5. INSTALLATION OF 1x WOOD BUCK TO THE SUBSTRATE TO BE ENGINEERED SEPARATELY.

Approved as complying with the Florida Buiding Code
Date JAN. 2, 2003
NOA# 02-0809.01
Miami Dade Product Control Division
By Manuel Perez

12/30/02
Robert L. Clark, P.E.
PE #39712
Structural

PGT INDUSTRIES
1070 TECHNOLOGY DRIVE
NOKOMIS, FL 34275
P.O. BOX 1529
NOKOMIS, FL 34274

Revsd By:	Date:	Revisions:
L.T.	12/30/02	C-NO CHG THIS SHT
F.K.	10/23/02	B-NO CHG THIS SHT
Drawn By: F.K.	Date: 7/30/02	

Description: ANCHORAGE

Title: MID-RISE, ALUM. HORIZONTAL ROLLER

Series/Model:	Scale:	Sheet:	Drawing No.	Rev:
HR-810	NTS	5 of 5	4121-2	C