MIAMI-DADE

BUILDING CODE COMPLIANCE OFFICE (BCCO)
PRODUCT CONTROL DIVISION

MIAMI-DADE COUNTY, FLORIDA
METRO-DADE FLAGLER BUILDING
140 WEST FLAGLER STREET, SUITE 1603
MIAMI, FLORIDA 33130-1563
(305) 375-2901 FAX (305) 375-2908

NOTICE OF ACCEPTANCE (NOA)

Eastern Metal Supply, Inc.
4268 Westroads Dr.
West Palm Beach, Florida 33407

SCOPE:

This NOA is being issued under the applicable rules and regulations governing the use of construction materials. The documentation submitted has been reviewed by Miami-Dade County Product Control Division and accepted by the Board of Rules and Appeals (BORA) to be used in Miami Dade County and other areas where allowed by the Authority Having Jurisdiction (AHJ).

This NOA shall not be valid after the expiration date stated below. The Miami-Dade County Product Control Division (In Miami Dade County) and/or the AHJ (in areas other than Miami Dade County) reserve the right to have this product or material tested for quality assurance purposes. If this product or material fails to perform in the accepted manner, the manufacturer will incur the expense of such testing and the AHJ may immediately revoke, modify, or suspend the use of such product or material within their jurisdiction. BORA reserves the right to revoke this acceptance, if it is determined by Miami-Dade County Product Control Division that this product or material fails to meet the requirements of the applicable building code.

This product is approved as described herein, and has been designed to comply with the High Velocity Hurricane Zone of the Florida Building Code.

DESCRIPTION: 0.072" Extruded Bertha Aluminum Storm Panels Shutter

APPROVAL DOCUMENT: Drawing No. 02-445, titled " Extruded Bertha Storm Panel ", sheets 1 through 8 of 8, prepared by Tilteco, Inc., dated September 05, 2002, bearing the Miami-Dade County Product Control Revision stamp with the Notice of Acceptance number and expiration date by the Miami-Dade County Product Control Division.

MISSILE IMPACT RATING: Large and Small Missile Impact

LABELING: Each panel shall bear a permanent label with the manufacturer's name or logo, city, state and the following statement: "Miami-Dade County Product Control Approved", unless otherwise noted herein.

RENEWAL of this NOA shall be considered after a renewal application has been filed and there has been no change in the applicable building code negatively affecting the performance of this product.

TERMINATION of this NOA will occur after the expiration date or if there has been a revision or change in the materials, use, and/or manufacture of the product or process. Misuse of this NOA as an endorsement of any product, for sales, advertising or any other purposes shall automatically terminate this NOA. Failure to comply with any section of this NOA shall be cause for termination and removal of NOA.

ADVERTISEMENT: The NOA number preceded by the words Miami-Dade County, Florida, and followed by the expiration date may be displayed in advertising literature. If any portion of the NOA is displayed, then it shall be done in its entirety.

INSPECTION: A copy of this entire NOA shall be provided to the user by the manufacturer or its distributors and shall be available for inspection at the job site at the request of the Building Official.

This NOA **revises NOA # 00-0809.01** and consists of this page 1 as well as approval document mentioned above. The submitted documentation was reviewed by **Helmy A. Makar, P.E.**

PRODUCT CONTROL ACCEPTED

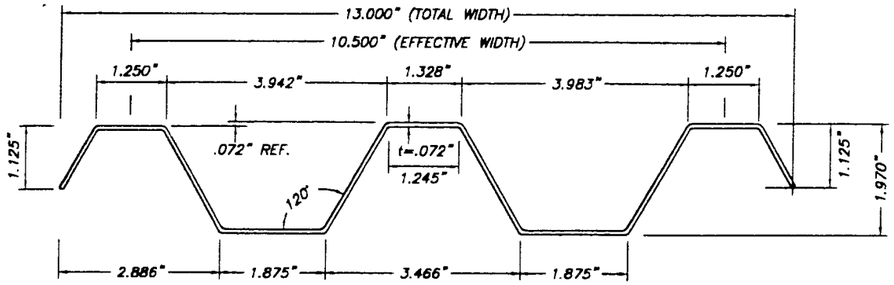

1 PANEL

SCALE : 3/8" = 1"

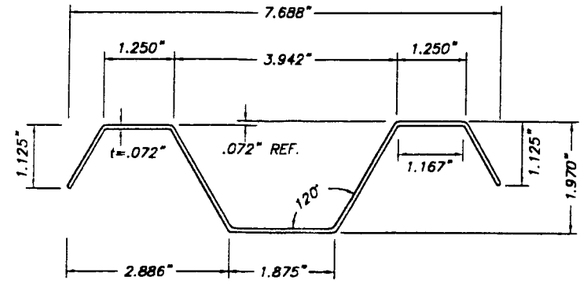

1A HALF PANEL

SCALE : 3/8" = 1"

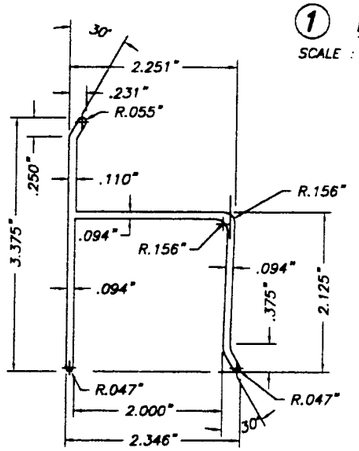

2 "h" HEADER

SCALE : 1/2" = 1"

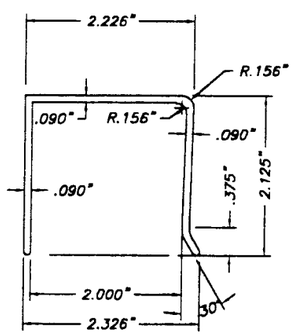

3 "U" HEADER

SCALE : 1/2" = 1"

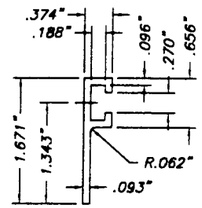

4 "F" TRACK

SCALE : 1/2" = 1"

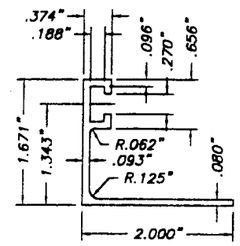

5 "F" TRACK ANGLE

SCALE : 1/2" = 1"

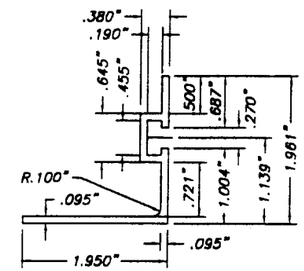

6 REVERSED "F" TRACK ANGLE

SCALE : 1/2" = 1"

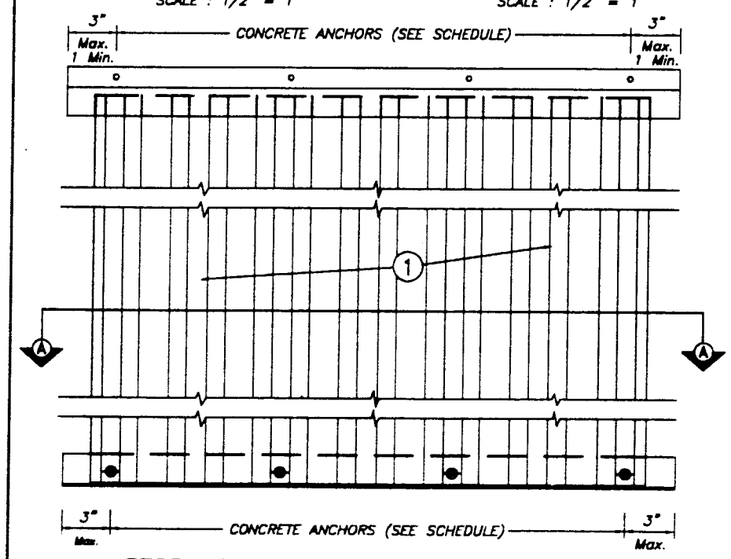

STORM PANEL TYPICAL ELEVATION

N. T. S.

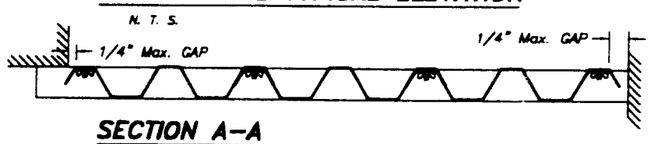

SECTION A-A

N. T. S.

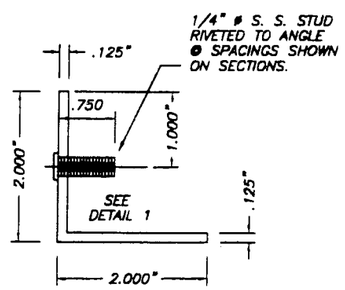

7 STUDDED ANGLE

6063-T5 Alum. ALLOY

SCALE : 1/2" = 1"

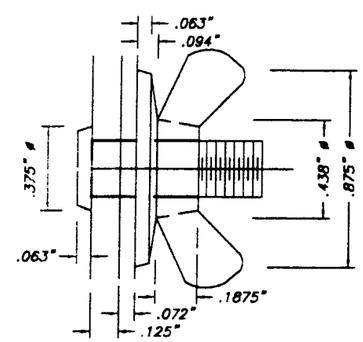

DETAIL 1: STUD W/ WING NUT

SCALE : 1/2" = 1"

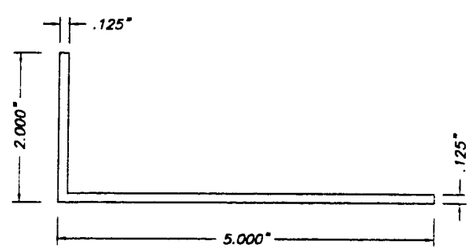

8 2" x 5" (Max.) x .125" ANGLE

SCALE : 1/2" = 1"

GENERAL NOTES:

1. EXTRUDED BERTHA STORM PANEL SHOWN ON THIS PRODUCT APPROVAL DOCUMENT HAS BEEN DESIGNED IN ACCORDANCE WITH THE 2001 EDITION OF THE FLORIDA BUILDING CODE.
DESIGN WIND LOADS SHALL BE DETERMINED AS PER SECTION 1619 OF THE ABOVE MENTIONED CODE, FOR A BASIC WIND SPEED OF 146 m.p.h., AND IN ACCORDANCE W/ ASCE 7-98 STANDARD.
STORM PANEL'S ADEQUACY FOR IMPACT AND FATIGUE RESISTANCE HAS BEEN VERIFIED IN ACCORDANCE WITH SECTION 1606.1.4 OF THE ABOVE MENTIONED CODE AS PER PA-201, PA-202 AND PA-203.

2. ALL ALUMINUM EXTRUDED PANELS SHALL BE 6063-T6 ALLOY.

3. ALL ALUMINUM EXTRUSIONS SHALL BE 6063-T6 ALLOY UNLESS OTHERWISE NOTED.

4. ALL SCREWS TO BE STAINLESS STEEL 304 OR 316 SERIES W/ 50 ksi YIELD POINT AND 90 ksi TENSILE STRENGTH OR CORROSION RESISTANT COATED CARBON STEEL AS PER DIN 50018.

5. BOLTS TO BE 2024-T4 ALUMINUM ALLOY, GALVANIZED OR STAINLESS STEEL, WITH 36 ksi MINIMUM YIELD POINT.

6. ANCHORS TO WALL SHALL BE AS FOLLOWS: (UNLESS OTHERWISE NOTED)
(A) TO EXISTING POURED CONCRETE:
- 1/4" ø TAPCON ANCHORS, AS MANUFACTURED BY I.T.W. BUILDEX OR ELCO TEXTRON.
- 1/4" ø ZAMAC NAILIN, AS MANUFACTURED BY POWERS FASTENINGS, INC.
- 1/4" ø x 7/8" CALK-IN ANCHORS, AS MANUFACTURED BY POWERS FASTENINGS, INC.

NOTES:
A.1) MINIMUM EMBEDMENT INTO POURED CONCRETE OF TAPCON ANCHORS SHALL BE 1 3/4" & 1 1/2" FOR ZAMAC NAILIN

A.2) 7/8" CALK-IN ANCHORS SHALL BE ENTIRELY EMBEDDED INTO THE POURED CONCRETE.
NO EMBEDMENT INTO STUCCO SHALL BE PERMITTED.
1/4" ø-20 SCREWS USED SHALL BE 1 1/2" LONG MINIMUM SHOULD STUCCO EXIST.

A.3) IN CASE THAT PRECAST STONE, PRECAST CONCRETE PANELS, OR PAVERS BE FOUND ON THE EXISTING WALL OR FLOOR, ANCHORS SHALL BE LONG ENOUGH TO REACH THE MAIN STRUCTURE BEHIND SUCH PANELS, ANCHORAGE SHALL BE AS INDICATED ON NOTES A.1) & A.2) ABOVE.

(B) TO EXISTING CONCRETE BLOCK WALL:
- 1/4" ø TAPCON ANCHORS, AS MANUFACTURED BY I.T.W. BUILDEX OR ELCO TEXTRON.
- 1/4" ø ZAMAC NAILIN, AS MANUFACTURED BY POWERS FASTENINGS, INC.
- 1/4" ø x 7/8" CALK-IN ANCHORS AS MANUFACTURED BY POWERS FASTENINGS, INC.

NOTES:
B.1) MINIMUM EMBEDMENT OF TAPCON ANCHORS AND ZAMAC NAILIN, INTO THE CONCRETE BLOCK UNIT SHALL BE 1 1/4".

B.2) 7/8" CALK-IN ANCHORS SHALL BE ENTIRELY EMBEDDED INTO THE CONCRETE BLOCK UNIT.
NO EMBEDMENT INTO STUCCO SHALL BE PERMITTED.
1/4" ø-20 SCREWS USED SHALL BE 1 1/2" LONG MINIMUM SHOULD STUCCO EXIST, AND 1" MINIMUM FOR WALLS WITH NO STUCCO.

B.3) IN CASE THAT PRECAST STONE OR PRECAST CONCRETE PANELS BE FOUND ON THE EXISTING WALL, ANCHORS SHALL BE LONG ENOUGH TO REACH THE MAIN STRUCTURE BEHIND SUCH PANELS. ANCHORAGE SHALL BE 1 1/4" MINIMUM FOR ANCHORS MENTIONED IN B.1). & 7/8" FOR ANCHORS MENTIONED IN B.2).

C) ANCHORS SHALL BE INSTALLED FOLLOWING ALL OF THE RECOMMENDATIONS AND SPECIFICATIONS OF THE ANCHOR'S MANUFACTURER.

7. PANELS MAY ALSO BE INSTALLED HORIZONTALLY FOLLOWING INSTALLATION DETAILS SHOWN ON SECTIONS 2, 3, 7, 8, & 9 (SHEET 2, 3 & 4 OF 8).

8. IT SHALL BE THE RESPONSIBILITY OF THE CONTRACTOR TO VERIFY THE SOUNDNESS OF THE STRUCTURE WHERE SHUTTER IS TO BE ATTACHED TO INSURE PROPER ANCHORAGE.

9. SHUTTER MANUFACTURER'S LABEL SHALL BE PLACED AT BOTTOM OF EACH PANEL.
LABEL SHALL READ AS FOLLOWS:
EASTERN METAL SUPPLY, INC.
WEST PALM BEACH, FLORIDA
MIAMI-DADE COUNTY PRODUCT CONTROL APPROVED.

10. (a) THIS PRODUCT APPROVAL DOCUMENT (P.A.D.) PREPARED BY THIS ENGINEER IS GENERIC AND DOES NOT PROVIDE INFORMATION FOR A SITE SPECIFIC PROJECT; i.e. WHERE THE SITE CONDITIONS DEVIATE FROM THE P.A.D.

(b) CONTRACTOR TO BE RESPONSIBLE FOR THE SELECTION, PURCHASE AND INSTALLATION OF THIS PRODUCT BASED ON THIS PRODUCT APPROVAL PROVIDED HE/SHE DOES NOT DEVIATE FROM THE CONDITIONS DETAILED ON THIS DOCUMENT.

(c) THIS PRODUCT APPROVAL DOCUMENT WILL BE CONSIDERED INVALID IF MODIFIED.

(d) SITE SPECIFIC PROJECTS SHALL BE PREPARED BY A FLORIDA REGISTERED ENGINEER OR ARCHITECT WHICH WILL BECOME THE PROFESSIONAL OF RECORD (P.O.R) FOR THE PROJECT AND WHO WILL BE RESPONSIBLE FOR THE PROPER USE OF THE P.A.D. PROFESSIONAL OF RECORD, ACTING AS A DELEGATED ENGINEER TO THE P.A.D. ENGINEER, SHALL SUBMIT TO THIS THE SITE SPECIFIC DRAWINGS FOR REVIEW.

(e) THIS P.A.D. SHALL BEAR THE DATE AND ORIGINAL SEAL AND SIGNATURE OF THE PROFESSIONAL ENGINEER THAT PREPARED IT.

PRODUCT REVISED
as complying with the Florida Building Code
Acceptance No 02-0809.03
Expiration Date 10/30/2003
By Helmy A. Moh
Miami Dade Product Control Division

MIAMI-DADE COUNTY

TILTECO INC.
TILLIT TESTING & ENGINEERING COMPANY
8885 N.W. 36th. St. Ste. 217, VIRGINIA GARDENS, FLORIDA 33166
Phone : (305)871-1830 Fax : (305)871-1831
EB-0006719
WALTER A. TILLIT Jr., P. E.
FLORIDA Lic. # 44167

EXTRUDED BERTHA STORM PANEL

EASTERN METAL SUPPLY, INC.
4268 WESTROADS DR.
WEST PALM BEACH, FL 33407

REV. NO	DESCRIPTION	DATE	REV. No	DESCRIPTION	DATE
1	-	-	3	-	-
2	-	-	4	-	-

AS SHOWN
SCALE

9/5/02
DATE

02-445
DRAWING No

SHEET 1 OF 8

SEP 0 9 2002

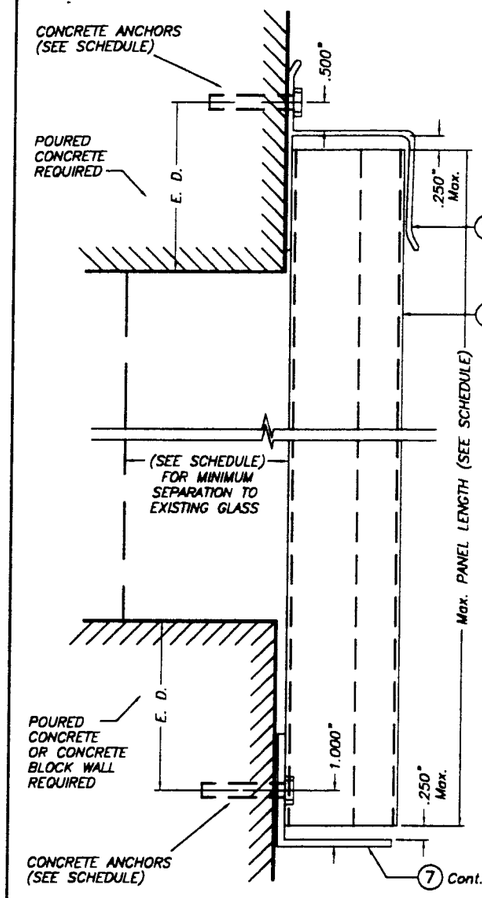

SECTION @ ANCHOR

WALL MOUNTING INSTALLATION SECTION 2

SCALE : 3/8" = 1"

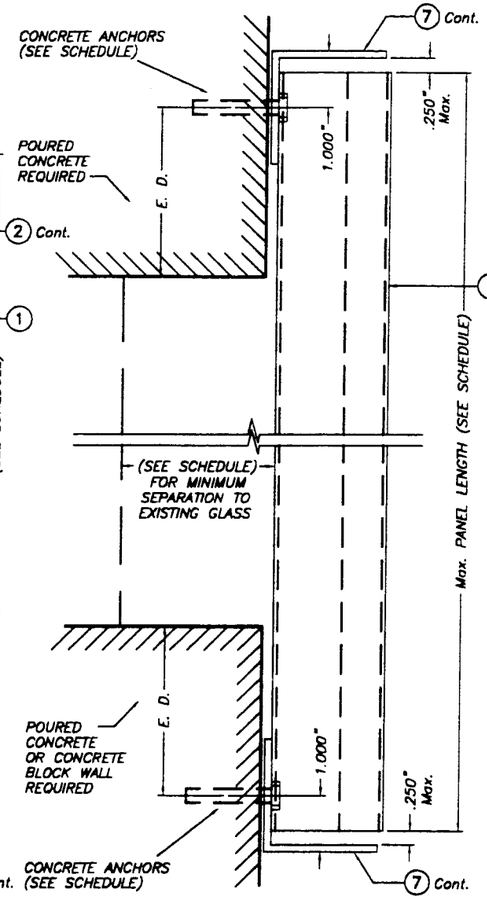

WALL MOUNTING INSTALLATION SECTION 3

SCALE : 3/8" = 1"

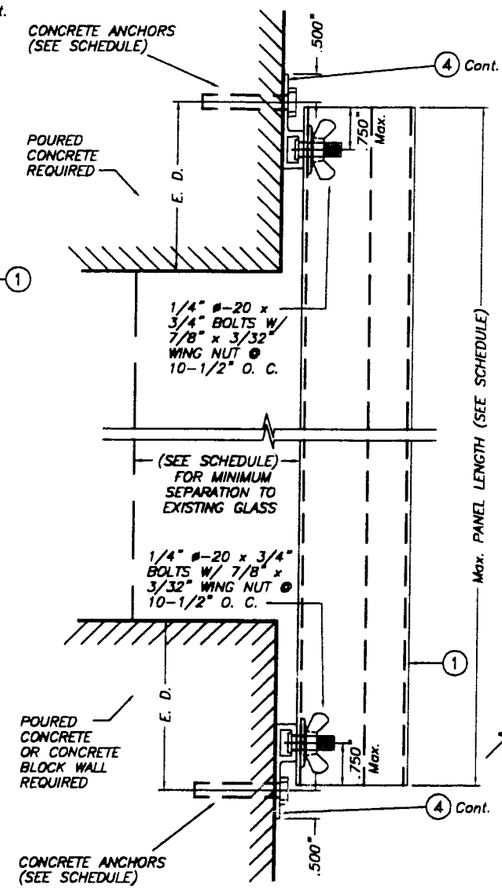

WALL MOUNTING INSTALLATION SECTION 3

SCALE : 3/8" = 1"

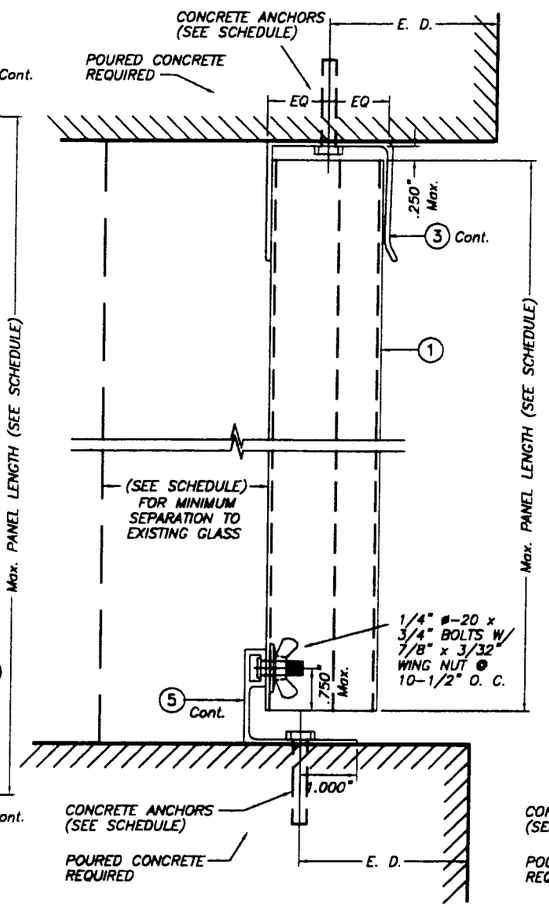

CEILING & FLOOR MOUNTING INSTALLATION – SECTION 4

SCALE : 3/8" = 1"

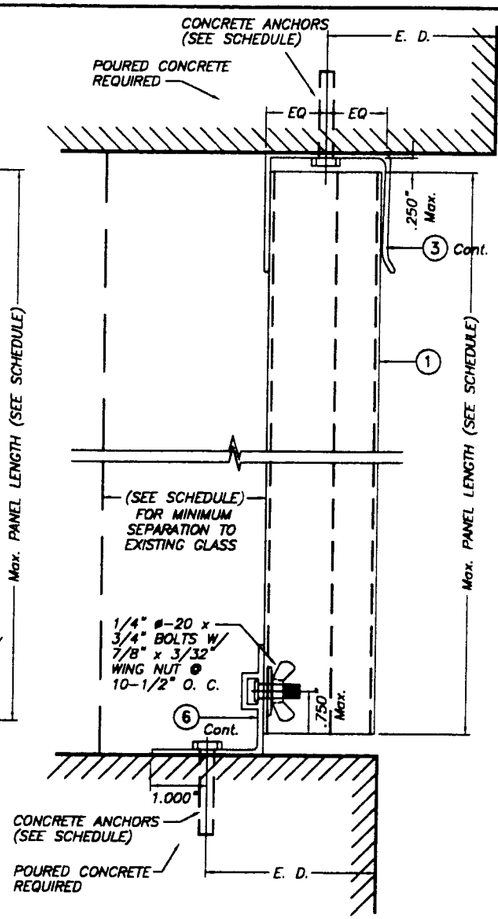

CEILING & FLOOR MOUNTING INSTALLATION – SECTION 5

SCALE : 3/8" = 1"

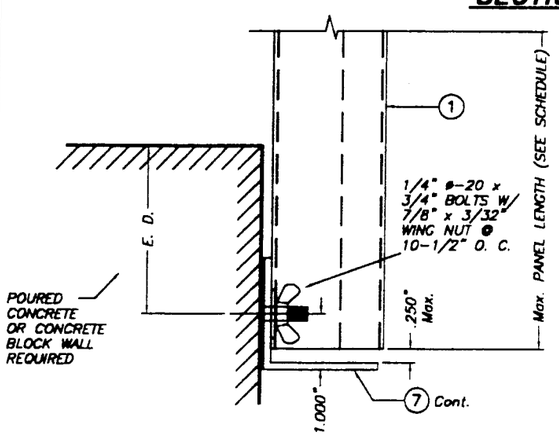

SECTION @ STUD

WALL MOUNTING INSTALLATION SECTION 1

SCALE : 3/8" = 1"

NOTE : DETAIL OF SECTION @ STUD VALID ALSO FOR WALL MOUNTING INSTALLATION – SECTION 2

E. D. = EDGE DISTANCE (SEE SCHEDULE ON SHEET 5 & 6 OF 8)

NOTE FOR COMBINATION OF SECTIONS :

WALL/FLOOR/CEILING MOUNTING SECTIONS CAN BE COMBINED IN ANY WAY TO SUIT ANY INSTALLATION.

PRODUCT REVISED
as complying with the Florida Building Code
Acceptance No 02-0809.03
Expiration Date 10/30/2003
By Helena A. Molina
Miami Dade Product Control Division

MIAMI–DADE COUNTY

TILLIT TESTING & ENGINEERING COMPANY
6895 N.W. 34th. St., Ste. 217, VIRGINIA GARDENS, FLORIDA 33166
Phone : (305)871-1530 . Fax : (305)871-1531
EB-0006719
WALTER A. TILLIT Jr., P. E.
FLORIDA Lic. # 44167

EXTRUDED BERTHA STORM PANEL

EASTERN METAL SUPPLY, INC.
4288 WESTROADS DR.
WEST PALM BEACH, FL 33407

REV. NO	DESCRIPTION	DATE	REV. No	DESCRIPTION	DATE
1	–	–	3	–	–
2	–	–	4	–	–

AS SHOWN SCALE

9/5/02 DATE

02-445 DRAWING No

SHEET 2 OF 8

SEP 0 9 2002

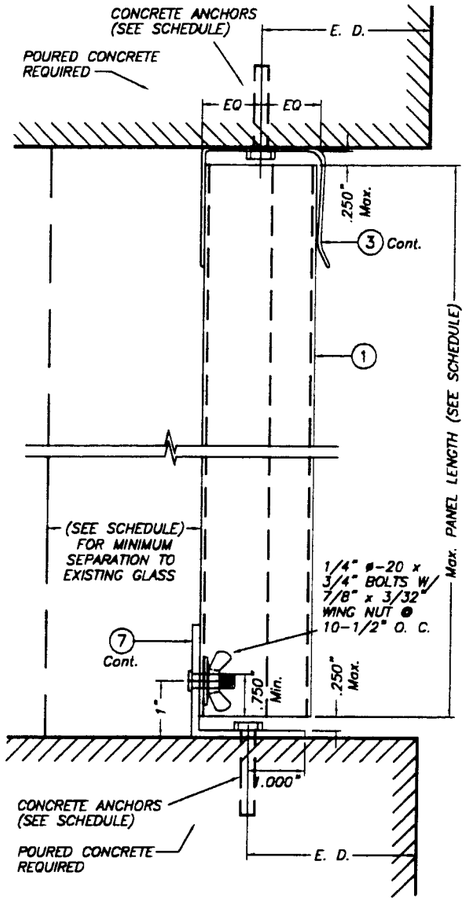

CEILING & FLOOR MOUNTING INSTALLATION – SECTION 6

SCALE : 3/8" = 1"

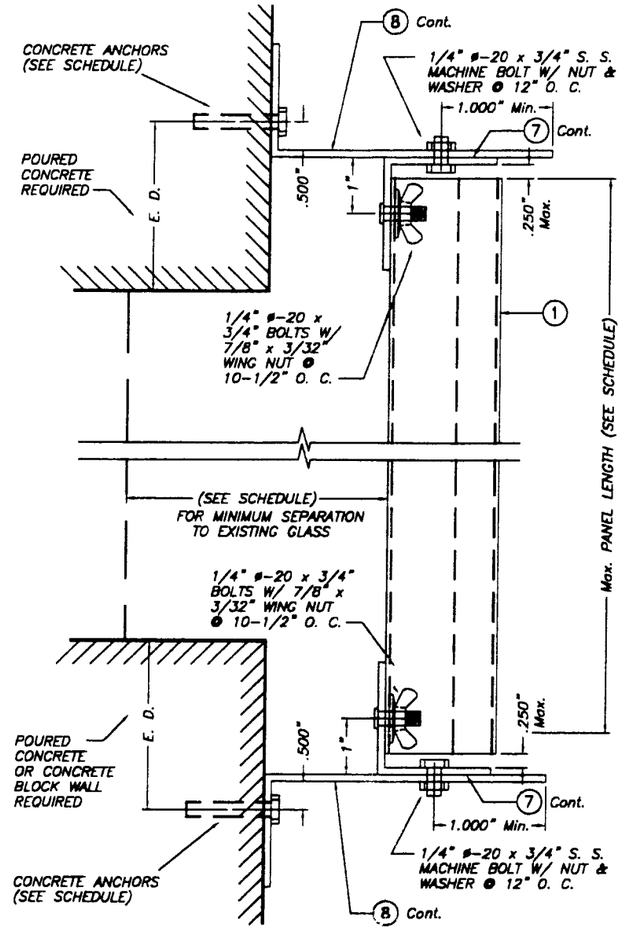

BUILD-OUT INSTALLATION – SECTION 7

SCALE : 3/8" = 1"

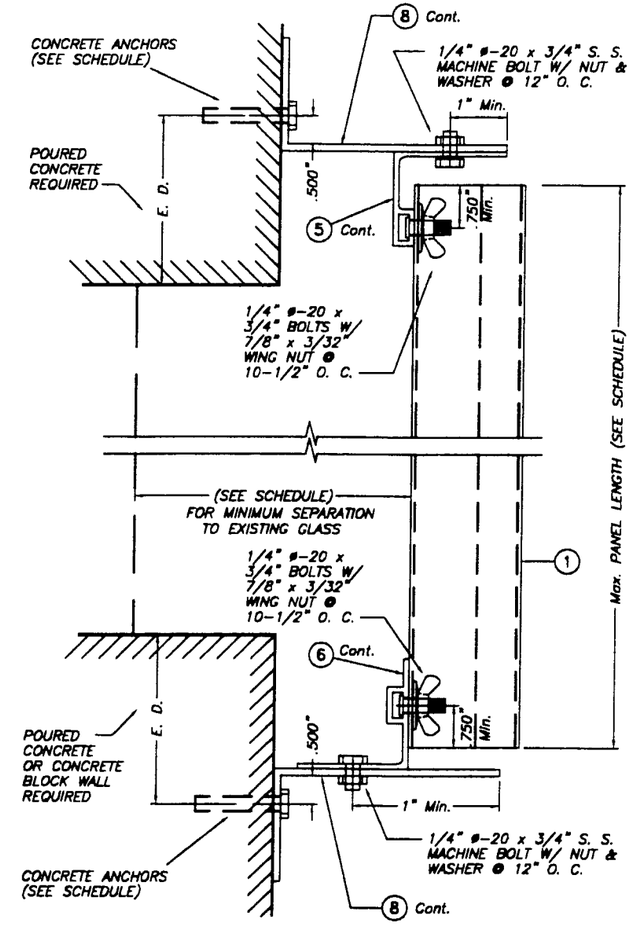

BUILD-OUT INSTALLATION – SECTION 8

SCALE : 3/8" = 1"

E. D. = EDGE DISTANCE (SEE SCHEDULE ON SHEET 5 & 6 OF 8)

NOTE FOR COMBINATION OF SECTIONS :

WALL/FLOOR/CEILING MOUNTING SECTIONS CAN BE COMBINED IN ANY WAY TO SUIT ANY INSTALLATION.

PRODUCT REVISED
as complying with the Florida Building Code
Acceptance No 02-0809.03
Expiration Date 10/30/2003
By Helmy A. Mohr
Miami Dade Product Control Division

MIAMI-DADE COUNTY

TILTECO INC.
TILLIT TESTING & ENGINEERING COMPANY
6885 N.W. 36th. St., Ste. 217, VIRGINIA GARDENS, FLORIDA 33166
Phone : (305)871-1530 . Fax : (305)871-1531
EB-0006719
WALTER A. TILLIT Jr., P. E.
FLORIDA Lic. # 44167

EXTRUDED BERTHA STORM PANEL

EASTERN METAL SUPPLY, INC.
4268 WESTROADS DR.
WEST PALM BEACH, FL 33407

REV. NO	DESCRIPTION	DATE	REV. No	DESCRIPTION	DATE
1	–	–	3	–	–
2	–	–	4	–	–

AS SHOWN SCALE
9/5/02 DATE
02-445 DRAWING No
SHEET 3 OF 8

SEP 0 9 2002

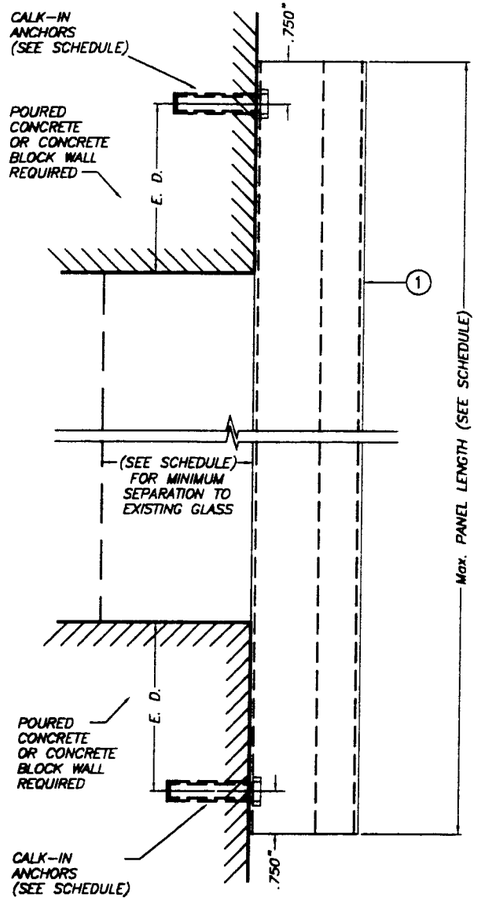

WALL MOUNTING INSTALLATION (D. M.) – SECTION 9

SCALE : 3/8" = 1"

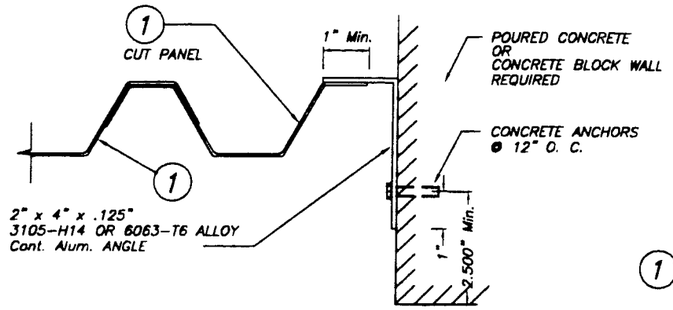

CASE A (Plan)

SCALE: 1/4" = 1"

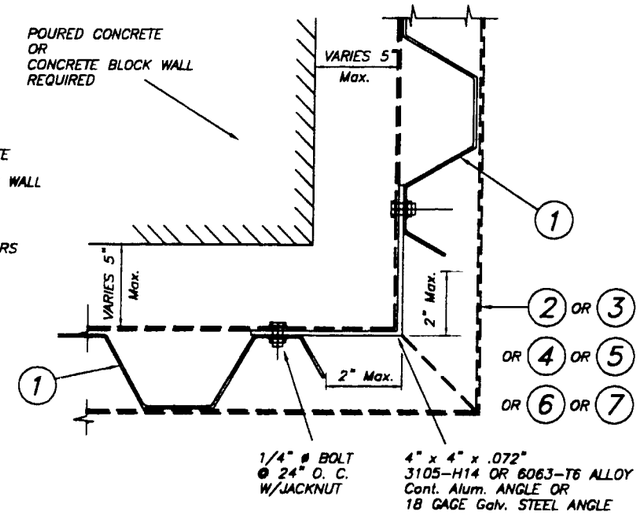

CASE B (Plan)

SCALE: 1/4" = 1"

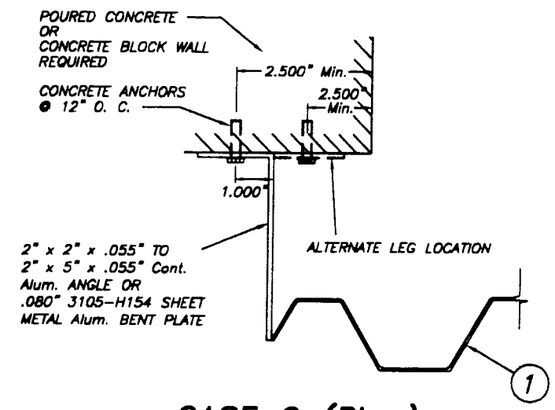

CASE C (Plan)

SCALE: 1/4" = 1"

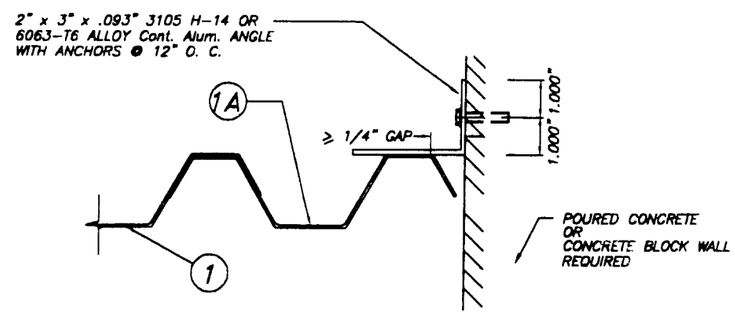

CASE D (Plan)

SCALE: 1/4" = 1"

END CLOSURES DETAILS

MAXIMUM DESIGN PRESSURE RATING "W" (p.s.f.) AND CORRESPONDING MAXIMUM PANEL LENGTH "L" SCHEDULE

MAXIMUM DESIGN LOAD W (p.s.f.)	Max. PANEL LENGTH L (ft.)	MINIMUM SEPARATION TO GLASS	APPLICABLE TO SECTIONS # & ANY COMBINATION OF THEM (SEE SHEET 2, 3 & 4 OF 8)
60.0, -72.0	7'-6"	2 1/8"	1, 2, 3, 4, 5, 6, 7, 8, & 9
60.0, -72.0	7'-6" TO 9'-0"	2 3/8"	1, 2, 3, 4, 5, 6, 7, 8, & 9
60.0, -72.0	>9'-0" TO 10'-0"	2 15/16"	7, 8 & 9
30.0, -42.0	>9'-0" TO 11'-10"	3"	2 & 3
30.0, -42.0	>10'-0" TO 11'-10"	3"	9

E. D. = EDGE DISTANCE (SEE SCHEDULE ON SHEET 5 & 6 OF 8)

PRODUCT REVISED
as complying with the Florida Buiding Code
Acceptance No 02-0809.03
Expiration Date 10/30/2003
By Helmy A. Nik
Miami Dade Product Control Division

MIAMI-DADE COUNTY

TILTECO INC.
TILLIT TESTING & ENGINEERING COMPANY
6885 N.W. 36th. St., Ste. 217, VIRGINIA GARDENS, FLORIDA 33166
Phone : (305)871-1530 . Fax : (305)871-1531
EB-0006719
WALTER A. TILLIT Jr., P. E.
FLORIDA Lic. # 44167

EXTRUDED BERTHA STORM PANEL

EASTERN METAL SUPPLY, INC.
4268 WESTROADS DR.
WEST PALM BEACH, FL 33407

REV. NO	DESCRIPTION	DATE	REV. No	DESCRIPTION	DATE
1	–	–	3	–	–
2	–	–	4	–	–

AS SHOWN SCALE
9/5/02 DATE
02-445 DRAWING No
SHEET 4 OF 8

SEP 0 9 2002

MAXIMUM DESIGN PRESSURE RATING "W" (p.s.f.) AND CORRESPONDING MAXIMUM ANCHOR SPACING SCHEDULE FOR INSTALLATIONS INTO CONCRETE AND CONCRETE BLOCK STRUCTURES *

E. D. = EDGE DISTANCE

MAXIMUM DESIGN LOAD W (p.s.f.)	MAXIMUM ANCHORS SPACING FOR E. D. = 3 1/2" **						APPLICABLE TO SECTIONS # & ANY COMBINATION OF THEM	MAXIMUM PANEL LENGTH "L" (ft.)
	TAPCONS		ZAMAC NAILIN		CALK-IN			
	TO CONCRETE	TO MASONRY	TO CONCRETE	TO MASONRY	TO CONCRETE	TO MASONRY		
+60.0, -72.0	12"	N/A	12"	N/A	12"	N/A	1 (TOP)	9'-0" OR LESS
	12"	7 1/2"	12"	9"	12"	10 1/2"	1 (BOTTOM)	
	12"	N/A	12"	N/A	12"	N/A	2 (TOP)	
	12"	7 1/2"	12"	9"	12"	10 1/2"	2 (BOTTOM)	
	12"	N/A	12"	N/A	12"	N/A	3 (TOP)	
	12"	7 1/2"	12"	9"	12"	10 1/2"	3 (BOTTOM)	
	12"	N/A	8"	N/A	12"	N/A	4, 5, 6 (TOP)	
	9"	N/A	5 1/2"	N/A	9 1/2"	N/A	4 (BOTTOM)	
	9 1/2"	N/A	6"	N/A	10"	N/A	5 (BOTTOM)	
	10 1/2"	N/A	7"	N/A	11"	N/A	6 (BOTTOM)	
	12"	N/A	12"	N/A	12"	N/A	7 (TOP)	
	12"	7 1/2"	12"	9"	12"	10 1/2"	7 (BOTTOM)	
	12"	N/A	11 1/2"	N/A	12"	N/A	8 (TOP)	
	12"	7 1/2"	12"	9"	12"	10 1/2"	8 (BOTTOM)	
	N/A	N/A	N/A	N/A	10 1/2"	10 1/2"	9 (TOP/BOTTOM)	

* SEE SHEET 7 & 8 OF 8 FOR ANCHORS TYPE & SPACING FOR INSTALLATIONS INTO WOOD FRAME BUILDINGS.

** MAXIMUM ANCHOR SPACING IS VALID FOR 3 1/2" EDGE DISTANCE. FOR E. D. LESS THAN 3 1/2", REDUCE ANCHOR SPACING BY MULTIPLYING SPACING SHOWN ON SCHEDULE BY THE FOLLOWING FACTORS. (NOTE: MIN. E.D. FOR CALK-IN ANCHORS IS 2 1/2")
FOR THIS OPERATION TO BE POSSIBLE, REDUCE SPACING OBTAINED USING FACTOR SHALL NOT BE LESS THAN MINIMUM SPACING INDICATED FOR EACH ANCHOR TYPE AT ANCHORS LEGEND.

ACTUAL E. D.	FACTOR	
	TAPCON/ZAMAC NAILIN/ PANELMATES	CALK-IN
3"	.86	.75
2 1/2"	.71	.50
2"	.50	-

ANCHORS LEGEND

ANCHOR TYPE	MIN. ANCHOR SPACING
TAPCON/ ZAMAC NAILIN/ PANELMATES	3"
CALK-IN	2 1/2"

PRODUCT REVISED
as complying with the Florida Buiding Code
Acceptance No 02-0809.03
Expiration Date 10/30/2003
By Helmy A. Nelson
Miami Dade Product Control Division

MIAMI-DADE COUNTY

TILTECO INC.
TILLIT TESTING & ENGINEERING COMPANY
6880 N.W. 36th. St., Ste. 217, VIRGINIA GARDENS, FLORIDA 33166
Phone : (305)871-1530 . Fax : (305)871-1531
EB-0006719
WALTER A. TILLIT Jr., P. E.
FLORIDA Lic. # 44167

EXTRUDED BERTHA STORM PANEL

EASTERN METAL SUPPLY, INC.
4268 WESTROADS DR.
WEST PALM BEACH, FL 33407

REV. NO	DESCRIPTION	DATE	REV. No	DESCRIPTION	DATE
1	-	-	3	-	-
2	-	-	4	-	-

AS SHOWN
SCALE

9/3/02
DATE

02-445
DRAWING No

SHEET 5 OF 8

SEP 0 9 2002

MAXIMUM DESIGN PRESSURE RATING "W" (p.s.f.) AND CORRESPONDING MAXIMUM ANCHOR SPACING SCHEDULE FOR INSTALLATIONS INTO CONCRETE AND CONCRETE BLOCK STRUCTURES *

E. D. = EDGE DISTANCE

MAXIMUM DESIGN LOAD W (p.s.f.)	MAXIMUM ANCHORS SPACING FOR E. D. = 3 1/2" **						APPLICABLE TO SECTIONS # & ANY COMBINATION OF THEM	MAXIMUM PANEL LENGTH "L" (ft.)
	TAPCONS		ZAMAC NAILIN		CALK-IN			
	TO CONCRETE	TO MASONRY	TO CONCRETE	TO MASONRY	TO CONCRETE	TO MASONRY		
+60.0, -72.0	12"	N/A	10 1/2"	N/A	12"	N/A	7 (TOP)	>9'-0" TO 10'-0"
	12"	6 1/2"	10 1/2"	8"	12"	9 1/2"	7 (BOTTOM)	
	12"	N/A	8 1/2"	N/A	12"	N/A	8 (TOP)	
	12"	6 1/2"	10 1/2"	7 1/2"	12"	9 1/2"	8 (BOTTOM)	
	N/A	N/A	N/A	N/A	10 1/2"	10 1/2"	9 (TOP/BOTTOM)	
+30.0, -42.0	12"	N/A	12"	N/A	12"	N/A	2 (TOP)	>9'-0" TO 11'-10"
	12"	9 1/2"	12"	11 1/2"	12"	12"	2 (BOTTOM)	
	12"	N/A	11 1/2"	N/A	12"	N/A	3 (TOP)	
	12"	9 1/2"	12"	11 1/2"	12"	12"	3 (BOTTOM)	
+30.0, -42.0	N/A	N/A	N/A	N/A	10 1/2"	10 1/2"	9 (TOP/BOTTOM)	>10'-0" TO 11'-10"

* SEE SHEET 7 & 8 OF 8 FOR ANCHORS TYPE & SPACING FOR INSTALLATIONS INTO WOOD FRAME BUILDINGS.

** MAXIMUM ANCHOR SPACING IS VALID FOR 3 1/2" EDGE DISTANCE. FOR E. D. LESS THAN 3 1/2", REDUCE ANCHOR SPACING BY MULTIPLYING SPACING SHOWN ON SCHEDULE BY THE FOLLOWING FACTORS. (NOTE: MIN. E.D. FOR CALK-IN ANCHORS IS 2 1/2")
FOR THIS OPERATION TO BE POSSIBLE, REDUCE SPACING OBTAINED USING FACTOR SHALL NOT BE LESS THAN MINIMUM SPACING INDICATED FOR EACH ANCHOR TYPE AT ANCHORS LEGEND.

ACTUAL E. D.	FACTOR	
	TAPCON/ZAMAC NAILIN/ PANELMATES	RAWL CALK-IN
3"	.86	.75
2 1/2"	.71	.50
2"	.50	-

ANCHORS LEGEND

ANCHOR TYPE	MIN. ANCHOR SPACING
TAPCON/ ZAMAC NAILIN/ PANELMATES	3"
CALK-IN	2 1/2"

PRODUCT REVISED
as complying with the Florida
Buiding Code
Acceptance No 02-0809.03
Expiration Date 10/30/2003
By Helmy A. Mahar
Miami Dade Product Control
Division

MIAMI-DADE COUNTY

TILTECO INC.
TILLIT TESTING & ENGINEERING COMPANY
6995 N.W. 36th. St., Ste. 217, VIRGINIA GARDENS, FLORIDA 33166
Phone : (305)871-1530 . Fax : (305)871-1531
EB-0006719
WALTER A. TILLIT Jr., P. E.
FLORIDA Lic. # 44167

EXTRUDED BERTHA STORM PANEL

EASTERN METAL SUPPLY, INC.
4268 WESTROADS DR.
WEST PALM BEACH, FL 33407

REV. NO	DESCRIPTION	DATE	REV. No	DESCRIPTION	DATE
1	-	-	3	-	-
2	-	-	4	-	-

AS SHOWN
SCALE

9/5/02
DATE

02-445
DRAWING No

SHEET 6 OF 8

SEP 0 9 2002

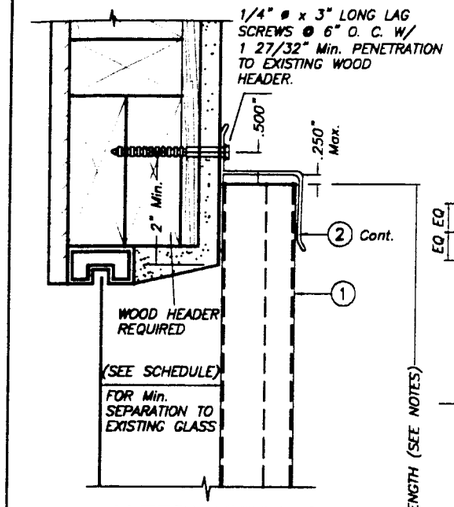

ALTERNATIVE 1

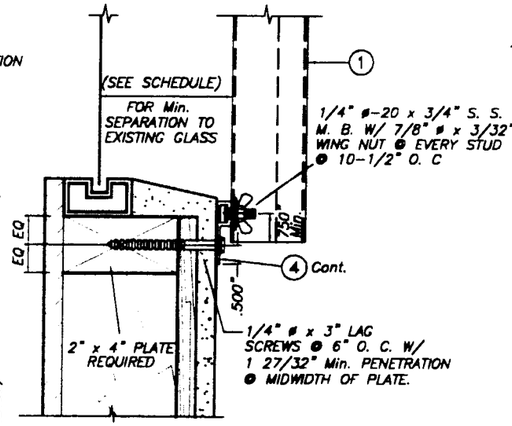

ALTERNATIVE 2A

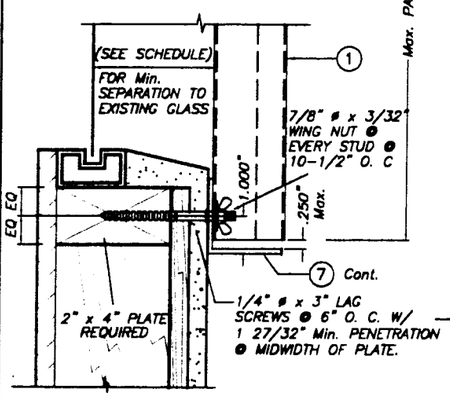

ALTERNATIVE 2

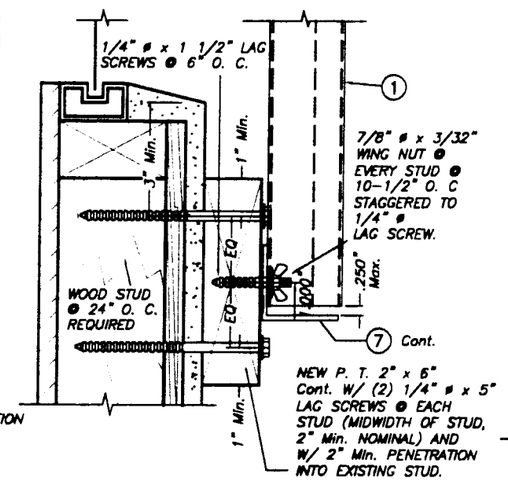

ALTERNATIVE 3

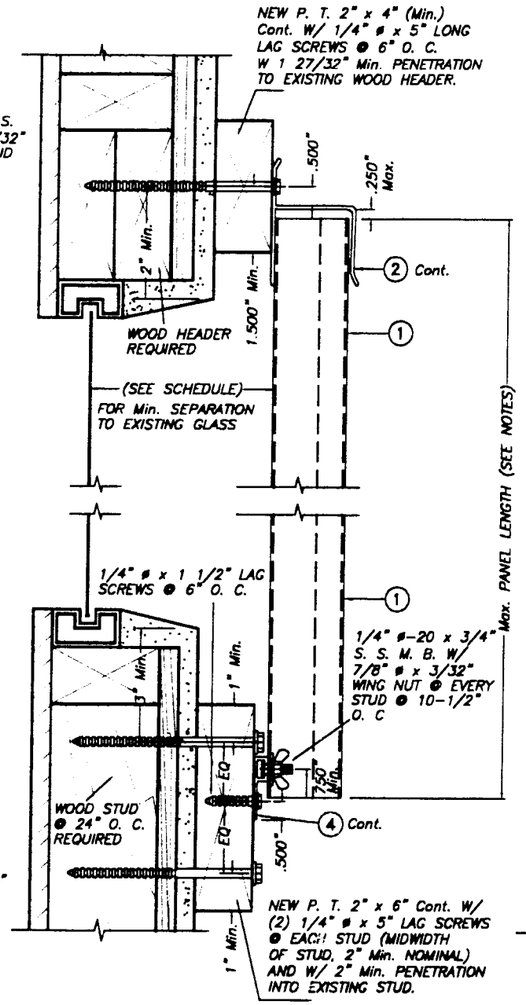

ALTERNATIVE 5

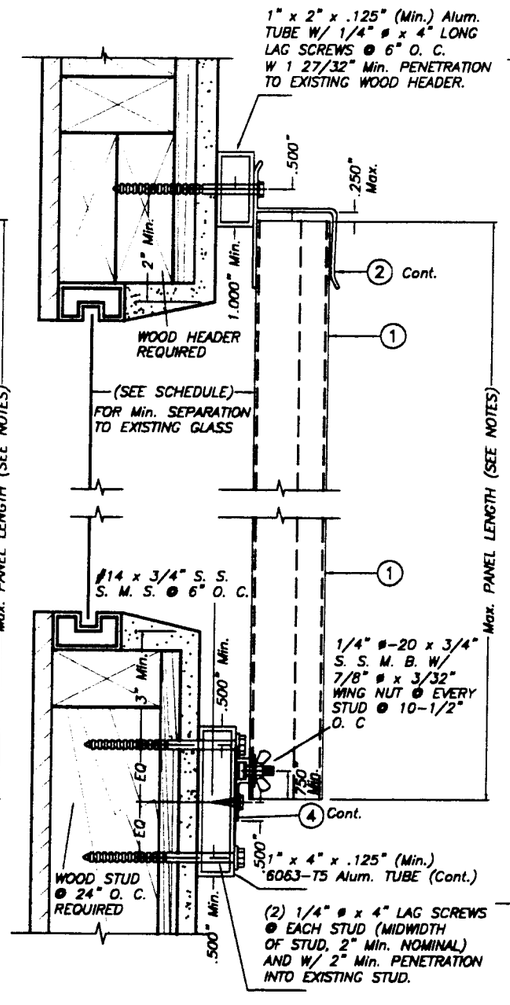

ALTERNATIVE 6

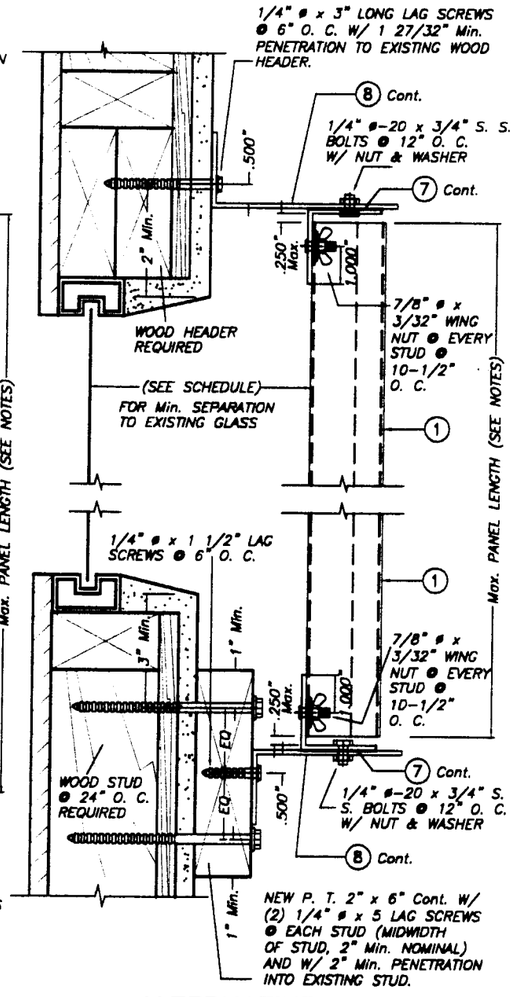

ALTERNATIVE 7

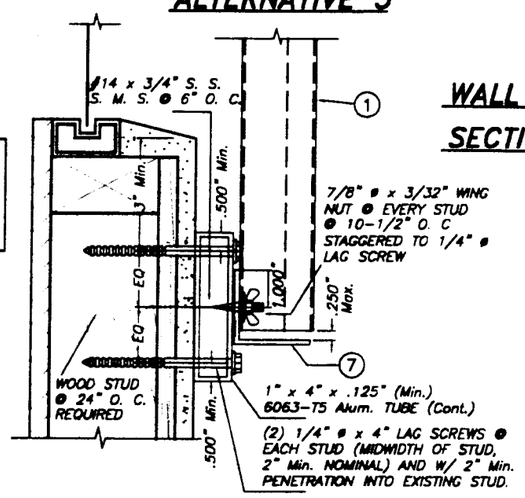

ALTERNATIVE 4

NOTE FOR COMBINATION OF SECTIONS:

WALL MOUNTING SECTIONS CAN BE COMBINED IN ANY WAY TO SUIT ANY INSTALLATION.

WALL MOUNTING INSTALLATIONS - SECTION A

SCALE : 1/4" = 1"

INSTALLATION DETAILS ON EXISTING WOOD BUILDINGS

NOTES:

1. INSTALLATIONS ARE ONLY VALID FOR DESIGN WIND LOADS UP TO +60.0, -72.0 psf AND PANEL'S LENGTH UP TO 9'-0".
2. NEW 2" x 6" P. T. TO BE SOUTHERN PINE No. 2, SURFACED DRY WITH 19 % M. M. C. W/ SPECIFIC DENSITY OF 0.55.
3. FOR NEW WOOD FRAME CONSTRUCTION: WOOD MEMBERS TO BE SOUTHERN PINE No. 2, W/ SPECIFIC DENSITY OF 0.55 OR EQUAL.

PRODUCT REVISED
as complying with the Florida Building Code
Acceptance No 02-0809.03
Expiration Date 10/30/2003
By Helmy A. Nasr
Miami Dade Product Control Division

MIAMI-DADE COUNTY

TILTECO INC.
TILLIT TESTING & ENGINEERING COMPANY
6895 N.W. 36th. St., Ste. 217, VIRGINIA GARDENS, FLORIDA 33166
Phone : (305)871-1830 . Fax : (305)871-1831
EB-0006719
WALTER A. TILLIT Jr., P. E.
FLORIDA Lic. # 44167

EXTRUDED BERTHA STORM PANEL

EASTERN METAL SUPPLY, INC.
4268 WESTROADS DR.
WEST PALM BEACH, FL 33407

REV. NO	DESCRIPTION	DATE	REV. No	DESCRIPTION	DATE
1	-	-	3	-	-
2	-	-	4	-	-

AS SHOWN
SCALE

9/3/02
DATE

02-445
DRAWING No

SHEET 7 OF 8

SEP 0 9 2002

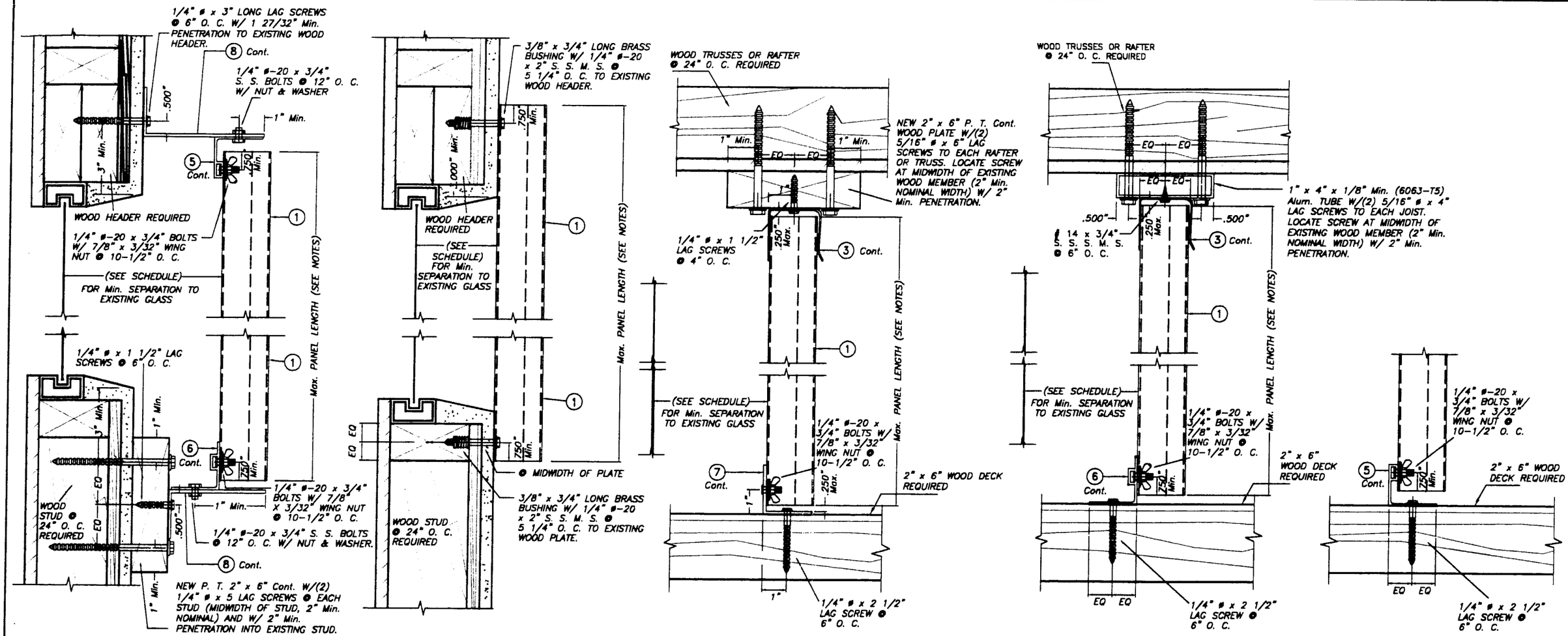

WALL MOUNTING INSTALLATIONS – SECTION A

SCALE : 1/4" = 1"

CEILING & FLOOR MOUNTING INSTALLATIONS – SECTION B

SCALE : 1/4" = 1"

NOTE FOR COMBINATION OF SECTIONS:

FLOOR/ WALL/ CEILING MOUNTING SECTIONS CAN BE COMBINED IN ANY WAY TO SUIT ANY INSTALLATION.

INSTALLATION DETAILS ON EXISTING WOOD BUILDINGS

PRODUCT REVISED
as complying with the Florida Buiding Code
Acceptance No 02-0809.03
Expiration Date 10/30/2003
By Helmy A. Hafez
Miami Dade Product Control Division

MIAMI-DADE COUNTY

NOTES:

1. INSTALLATIONS ARE ONLY VALID FOR DESIGN WIND LOADS UP TO +60.0, -72.0 psf AND PANEL'S LENGTH UP TO 9'-0".
2. NEW 2" x 6" P. T. TO BE SOUTHERN PINE No. 2, SURFACED DRY WITH 19 % M. M. C. W/ SPECIFIC DENSITY OF 0.55.
3. FOR NEW WOOD FRAME CONSTRUCTION: WOOD MEMBERS TO BE SOUTHERN PINE No. 2, W/ SPECIFIC DENSITY OF 0.55 OR EQUAL.

TILTECO INC.
TILLIT TESTING & ENGINEERING COMPANY
6666 N.W. 34th. St., Ste. 217, VIRGINIA GARDENS, FLORIDA 33166
Phone : (305)871-1530 . Fax : (305)871-1531
EB-0006719
WALTER A. TILLIT Jr., P. E.
FLORIDA Lic. # 44167

EXTRUDED BERTHA STORM PANEL

EASTERN METAL SUPPLY, INC.
4268 WESTROADS DR.
WEST PALM BEACH, FL 33407

REV. NO	DESCRIPTION	DATE	REV. No	DESCRIPTION	DATE
1	–	–	3	–	–
2	–	–	4	–	–

AS SHOWN
SCALE

9/5/02
DATE

02-445
DRAWING No

SHEET 8 OF 8

SEP 0 9 2002