MIAMI-DADE

BUILDING CODE COMPLIANCE OFFICE (BCCO)
PRODUCT CONTROL DIVISION

MIAMI-DADE COUNTY, FLORIDA
METRO-DADE FLAGLER BUILDING
140 WEST FLAGLER STREET, SUITE 1603
MIAMI, FLORIDA 33130-1563
(305) 375-2901 FAX (305) 375-2908

NOTICE OF ACCEPTANCE (NOA)

Coulter Hurricane Products Corporation
1621 Hammond Drive
Miami Springs, Florida 33166

SCOPE:

This NOA is being issued under the applicable rules and regulations governing the use of construction materials. The documentation submitted has been reviewed by Miami-Dade County Product Control Division and accepted by the Board of Rules and Appeals (BORA) to be used in Miami Dade County and other areas where allowed by the Authority Having Jurisdiction (AHJ).

This NOA shall not be valid after the expiration date stated below. The Miami-Dade County Product Control Division (In Miami Dade County) and/or the AHJ (in areas other than Miami Dade County) reserve the right to have this product or material tested for quality assurance purposes. If this product or material fails to perform in the accepted manner, the manufacturer will incur the expense of such testing and the AHJ may immediately revoke, modify, or suspend the use of such product or material within their jurisdiction. BORA reserves the right to revoke this acceptance, if it is determined by Miami-Dade County Product Control Division that this product or material fails to meet the requirements of the applicable building code.

This product is approved as described herein, and has been designed to comply with the High Velocity Hurricane Zone of the Florida Building Code.

DESCRIPTION: ASSA / Economy Aluminum Accordion Shutter

APPROVAL DOCUMENT: Drawing No. 02-461, titled " ASSA / Economy Accordion Shutter ", sheets 1 through 9 of 9, prepared by Tilteco, Inc., dated September 24, 2002, bearing the Miami-Dade County Product Control Revision stamp with the Notice of Acceptance number and expiration date by the Miami-Dade County Product Control Division.

MISSILE IMPACT RATING: Large and Small Missile Impact

LABELING: Each unit shall bear a permanent label with the manufacturer's name or logo, city, state and the following statement: "Miami-Dade County Product Control Approved", unless otherwise noted herein.

RENEWAL of this NOA shall be considered after a renewal application has been filed and there has been no change in the applicable building code negatively affecting the performance of this product.

TERMINATION of this NOA will occur after the expiration date or if there has been a revision or change in the materials, use, and/or manufacture of the product or process. Misuse of this NOA as an endorsement of any product, for sales, advertising or any other purposes shall automatically terminate this NOA. Failure to comply with any section of this NOA shall be cause for termination and removal of NOA.

ADVERTISEMENT: The NOA number preceded by the words Miami-Dade County, Florida, and followed by the expiration date may be displayed in advertising literature. If any portion of the NOA is displayed, then it shall be done in its entirety.

INSPECTION: A copy of this entire NOA shall be provided to the user by the manufacturer or its distributors and shall be available for inspection at the job site at the request of the Building Official.

This NOA **revises NOA # 01-0626.02** and consists of this page 1 as well as approval document mentioned above. The submitted documentation was reviewed by **Helmy A. Makar, P.E.**

PRODUCT CONTROL ACCEPTED

NOA No 02-0814.08
Expiration Date: 10/17/2006
Approval Date: 10/31/2002

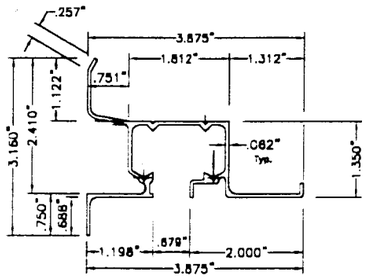

Ⓐ HEADER–WALL MOUNT.
Ⓐ SILL–WALL MOUNT. (INVERTED USE)
SCALE: 3/8" = 1"

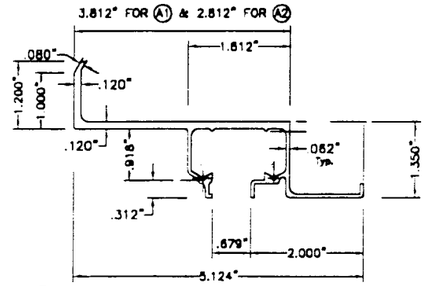

(A1) & (A2) HEADERS–WALL MOUNT.
SCALE: 3/8" = 1"

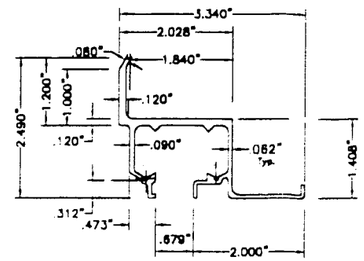

(A3) HEADERS–WALL MOUNT.
SCALE: 3/8" = 1"

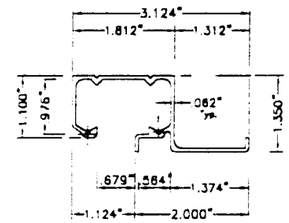

(B) HEADER CEILING MOUNT.
SCALE: 3/8" = 1"

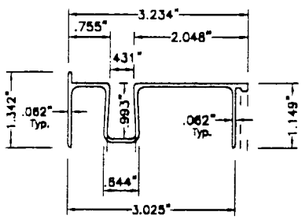

(C) SILL
SCALE: 3/8" = 1"

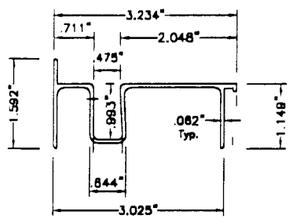

(C1) SILL
SCALE: 3/8" = 1"

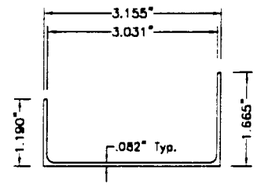

(D) SILL BOTTOM ADAPTER
SCALE: 3/8" = 1"

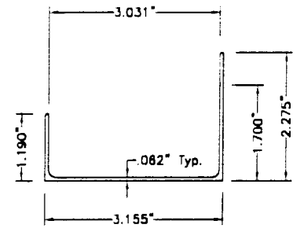

(D1) SILL BOTTOM ADAPTER
SCALE: 3/8" = 1"

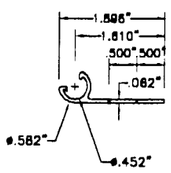

(E) 180° STARTER
SCALE: 3/8" = 1"

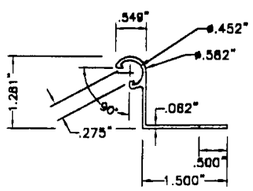

(E1) 90° STARTER
SCALE: 3/8" = 1"

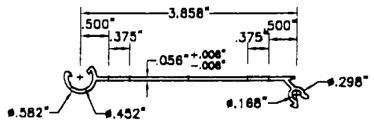

(F) LOUVER BLADE
SCALE: 3/8" = 1"

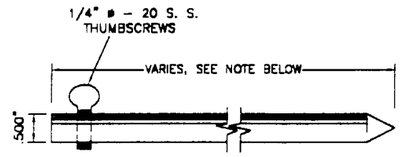

(G) LOCKING PIN
SCALE: 3/8" = 1"

12" Min. FOR UP TO 9'–0" SHUTTER BLADE LENGTHS AND 24" Min. FOR SHUTTER BLADE LENGTHS GREATER THAN 9'–0".

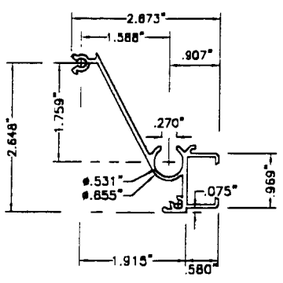

(H) MALE LOCK SLAT
SCALE: 3/8" = 1"

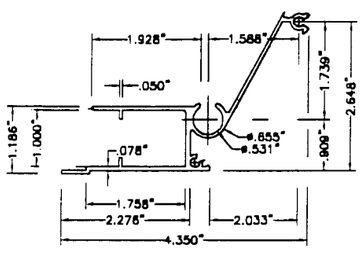

(I) FEMALE LOCK SLAT
SCALE: 3/8" = 1"

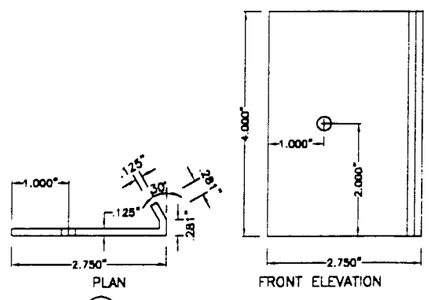

(J) OUTSIDE LOCKER # 1
SCALE: 3/8" = 1"

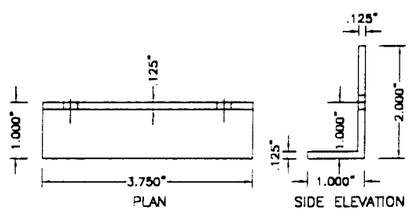

(K) INSIDE LOCKER # 2
SCALE: 3/8" = 1"

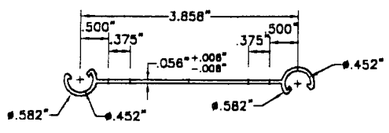

(L) FEMALE/FEMALE
ECONO BLADE
SCALE: 3/8" = 1"

COMPONENTS

GENERAL NOTES:

1. ACCORDION SHUTTER SHOWN ON THIS PRODUCT APPROVAL DOCUMENT HAS BEEN DESIGN IN ACCORDANCE WITH THE 2001 EDITION OF THE FLORIDA BUILDING CODE.
DESIGN WIND LOADS SHALL BE DETERMINED AS PER SECTION 1619 OF THE ABOVE MENTIONED CODE, FOR A BASIC WIND SPEED OF 146 m.p.h., AND IN ACCORDANCE W/ ASCE 7–98 STANDARD. ACCORDION SHUTTER'S ADEQUACY FOR IMPACT AND FATIGUE RESISTANCE HAS BEEN VERIFIED IN ACCORDANCE WITH SECTION 1606.1.4 OF THE ABOVE MENTIONED CODE AS PER PA–201, PA–202 AND PA–203.

2. STAINLESS STEEL SHEET METAL SCREWS USED AT LOUVER PIN SHALL BE # 10 x 3", 410–HT MINIMUM SERIES W/ 135.0 ksi YIELD POINT & 180 ksi TENSILE STRENGTH. SCREWS SHALL BE COATED WITH XYLAN 5000 SERIES FLUOROPOLYMER COATINGS AS MANUFACTURED BY WHITFORD Co. BOX 507. WEST CHESTER PA. 19381.

3. ALL ALUMINUM EXTRUSIONS SHALL BE 6063–T6 ALLOY (UNLESS OTHERWISE NOTED).

4. ALL SCREWS TO BE STAINLESS STEEL 304 OR 316 SERIES W/ 50 ksi YIELD POINT AND 90 ksi TENSILE STRENGTH OR CORROSION RESISTANT COATED CARBON STEEL AS PER DIN 50018.

5. ALL ALUMINUM POP RIVETS TO BE 5052 ALUMINUM ALLOY WITH ALUMINUM MANDREL.

6. BOLTS TO BE 2024–T4 ALUMINUM ALLOY GALVANIZED OR STAINLESS STEEL WITH 35 ksi MINIMUM MINIMUM YIELD POINT.

7. ANCHORS TO WALL SHALL BE AS FOLLOWS: (UNLESS OTHERWISE NOTED)
(A) TO EXISTING POURED CONCRETE:
- 1/4" ø TAPCON ANCHORS, AS MANUFACTURED BY I.T.W. BUILDEX OR ELCO TEXTRON
- 1/4" ø ZAMAC NAILIN ANCHORS, AS MANUFACTURED BY POWERS FASTENING, INC.
- 1/4" ø x 7/8" CALK–IN AS MANUFACTURED BY POWERS FASTENING, INC.

NOTES:
A.1) MINIMUM EMBEDMENT OF TAPCON ANCHORS INTO POURED CONCRETE IS 1 3/4". MINIMUM EMBEDMENT OF ZAMAC NAILIN IS 1 1/2".
A.2) 7/8" CALK–IN ANCHORS SHALL BE ENTIRELY EMBEDDED INTO THE POURED CONCRETE. NO EMBEDMENT INTO STUCCO SHALL BE PERMITTED. 1/4" ø–20 SCREWS USED SHALL BE 1 1/2" LONG MINIMUM SHOULD STUCCO EXIST.
A.3) IN CASE THAT PRECAST STONE, PRECAST CONCRETE PANELS, OR PAVERS BE FOUND ON THE EXISTING WALL OR FLOOR, ANCHORS SHALL BE LONG ENOUGH TO REACH THE MAIN STRUCTURE BEHIND SUCH PANELS. ANCHORAGE SHALL BE AS INDICATED ON NOTES A.1) & A.2) ABOVE.

(B) TO EXISTING CONCRETE BLOCK WALL:
- 1/4" ø TAPCON ANCHORS AS MANUFACTURED BY I.T.W. BUILDEX OR ELCO TEXTRON
- 1/4" ø ZAMAC NAILIN ANCHORS AS MANUFACTURED POWERS FASTENING, INC.
- 1/4" ø x 7/8" CALK–IN AS MANUFACTURED BY POWERS FASTENING, INC.

NOTES:
B.1) MINIMUM EMBEDMENT OF TAPCON ANCHORS, AND ZAMAC NAILIN ANCHORS INTO THE CONCRETE BLOCK UNIT SHALL BE 1 1/4".

B.2) 7/8" CALK–IN ANCHORS SHALL BE ENTIRELY EMBEDDED INTO THE CONCRETE. BLOCK UNIT. NO EMBEDMENT INTO STUCCO SHALL BE PERMITTED.
1/4" ø–20 SCREWS USED SHALL BE 1 1/2" LONG MINIMUM SHOULD STUCCO EXIST.

B.3) IN CASE THAT PRECAST STONE OR PRECAST CONCRETE PANELS BE FOUND ON THE EXISTING WALL, ANCHORS SHALL BE LONG ENOUGH TO REACH THE MAIN STRUCTURE BEHIND SUCH PANELS. ANCHORAGE SHALL BE AS INDICATED ON NOTES B.1) & B.2) ABOVE.

(C) ANCHORS SHALL BE INSTALLED FOLLOWING ALL OF THE RECOMMENDATIONS AND SPECIFICATIONS OF THE ANCHOR'S MANUFACTURER.

8. BLADE (F), AND THE KNUCKLES FOR CENTERMATES (H) & (I), & THE STARTERS (E) & (E1) ARE UNDER THE PATENT OF EASTERN METALS.

9. IT SHALL BE THE RESPONSIBILITY OF THE CONTRACTOR TO VERIFY THE SOUNDNESS OF THE STRUCTURE WHERE SHUTTER IS TO BE ATTACHED TO INSURE PROPER ANCHORAGE.

10. SHUTTER'S MANUFACTURER STAMP SHALL BE PLACED ON THE EXPOSED SURFACE OF THE FEMALE LOCK SLAT (COMPONENT (I)).
ONE LABEL SHALL BE PLACED FOR EVERY OPENING. LABEL SHALL READ AS FOLLOWS:
COULTER HURRICANE PRODUCTS CORPORATION
HIALEAH GARDENS, FL 33016
MIAMI–DADE COUNTY PRODUCT CONTROL APPROVED.

11. (a) THE PRODUCT APPROVAL DOCUMENT (P.A.D.) PREPARED BY THIS ENGINEER IS GENERIC AND DOES NOT PROVIDE INFORMATION FOR A SITE SPECIFIC PROJECT; i.e. WHERE THE SITE CONDITIONS DEVIATE FROM THE P.A.D.

(b) CONTRACTOR TO BE RESPONSIBLE FOR THE SELECTION, PURCHASE AND INSTALLATION OF THIS PRODUCT BASED ON THIS PRODUCT APPROVAL PROVIDED HE/SHE DOES NOT DEVIATE FROM THE CONDITIONS DETAILED ON THIS DOCUMENT.

(c) THIS PRODUCT APPROVAL DOCUMENT WILL BE CONSIDERED INVALID IF MODIFIED.

(d) SITE SPECIFIC PROJECTS SHALL BE PREPARED BY A FLORIDA REGISTERED ENGINEER OR ARCHITECT WHICH WILL BECOME THE PROFESSIONAL OF RECORD (P.O.R.) FOR THE PROJECT AND WHO WILL BE RESPONSIBLE FOR THE PROPER USE OF THE P.A.D. PROFESSIONAL OF RECORD, ACTING AS A DELEGATED ENGINEER TO THE P.A.D. ENGINEER, SHALL SUBMIT TO THIS LATTER THE SITE SPECIFIC DRAWINGS FOR REVIEW.

(e) THIS P.A.D. SHALL BEAR THE DATE AND ORIGINAL SEAL AND SIGNATURE OF THE PROFESSIONAL ENGINEER THAT PREPARED IT.

PRODUCT REVISED
as complying with the Florida Buiding Code
Acceptance No 02-0814.08
Expiration Date 10/17/2006
By Helmy A. Hafez
Miami Dade Product Control Division

MIAMI–DADE COUNTY

TILTECO INC.
TILLIT TESTING & ENGINEERING COMPANY
6595 N.W. 36th. St., Sts. 217, VIRGINIA GARDENS, FLORIDA 33166
Phone : (305)871–1530 . Fax : (305)871–1531
EB–0006719
WALTER A. TILLIT Jr., P. E.
FLORIDA Lic. # 44167

9/27/02

ASSA / ECONOMY ACCORDION SHUTTER

COULTER HURRICANE PRODUCTS CORPORATION
(ASSA # 18)
9821 N.W. 80th AVE. BAY P–5
HIALEAH GARDENS, FLORIDA 33016

AS SHOWN SCALE
9/24/02 DATE
02–461 DRAWING No

REV. NO	DESCRIPTION	DATE	REV. No	DESCRIPTION	DATE
1	–	–	3	–	–
2	–	–	4	–	–

SHEET 1 OF 9

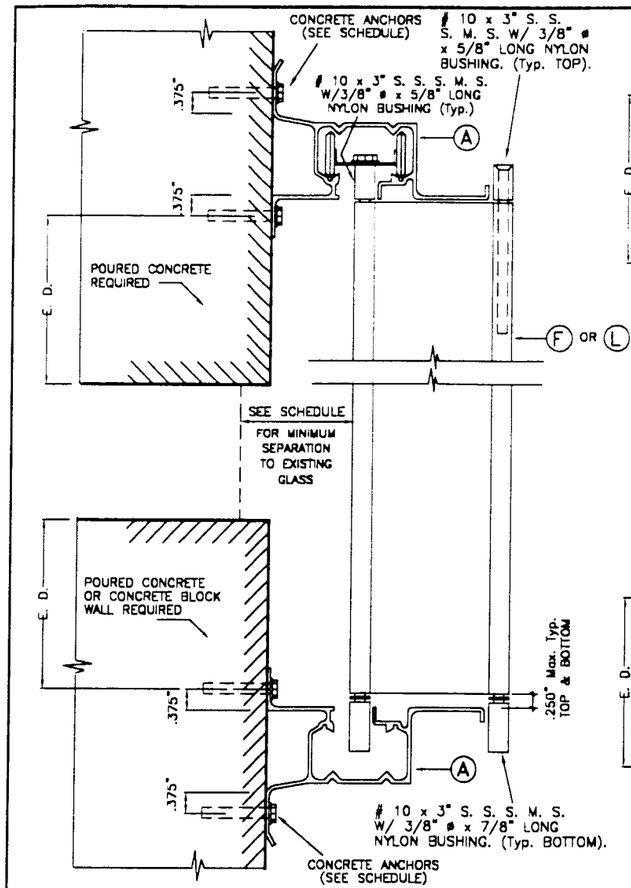

WALL MOUNTING INSTALLATION
– SECTION A
SCALE: 3/8" = 1"

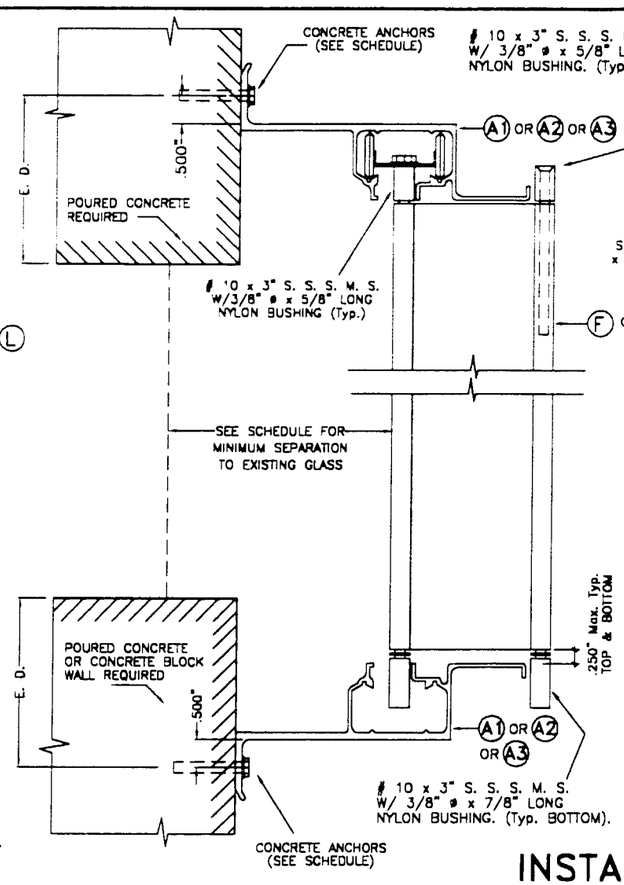

WALL MOUNTING INSTALLATION
– SECTION A1
SCALE: 3/8" = 1"

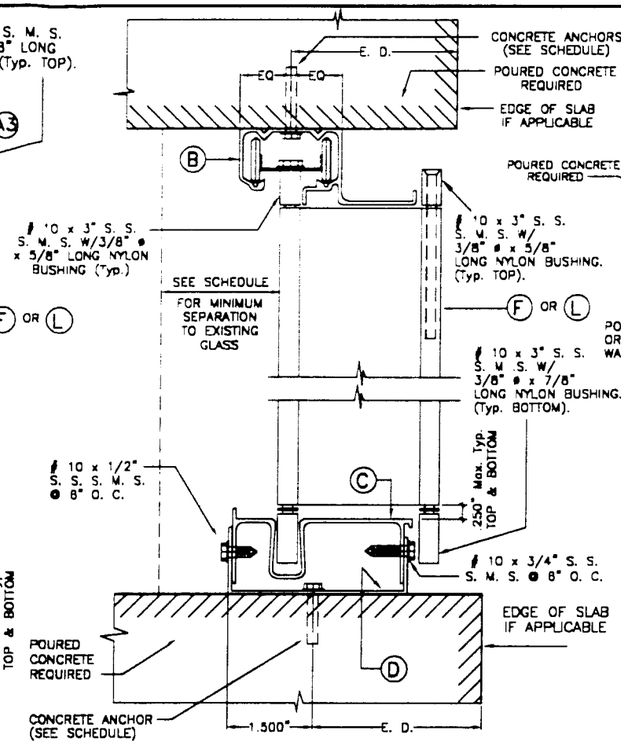

CEILING & FLOOR MOUNT. INSTALLAT.
– SECTION B
SCALE: 3/8" = 1"

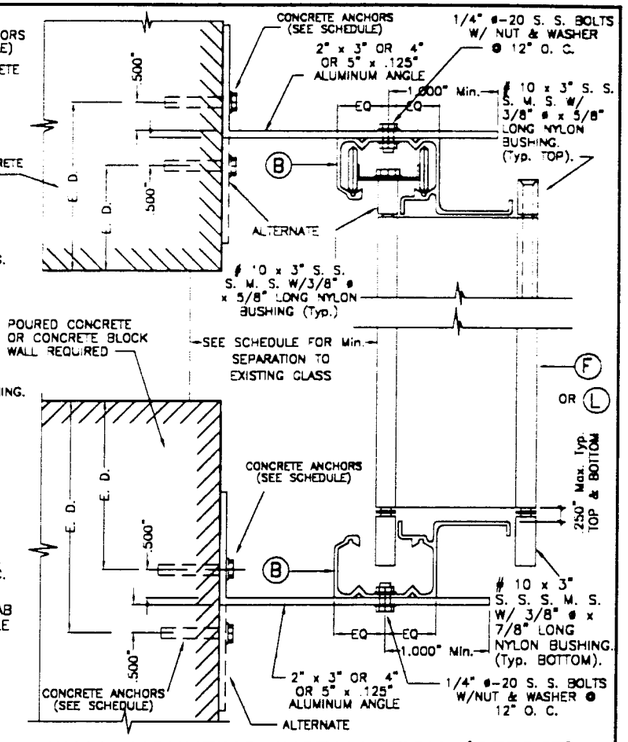

WALL MOUNTING INSTALLATION (OFFSET)
– SECTION C
SCALE: 3/8" = 1

INSTALLATION DETAILS

E. D. = EDGE DISTANCE (SEE SCHEDULE ON SHEET 8 OF 9)

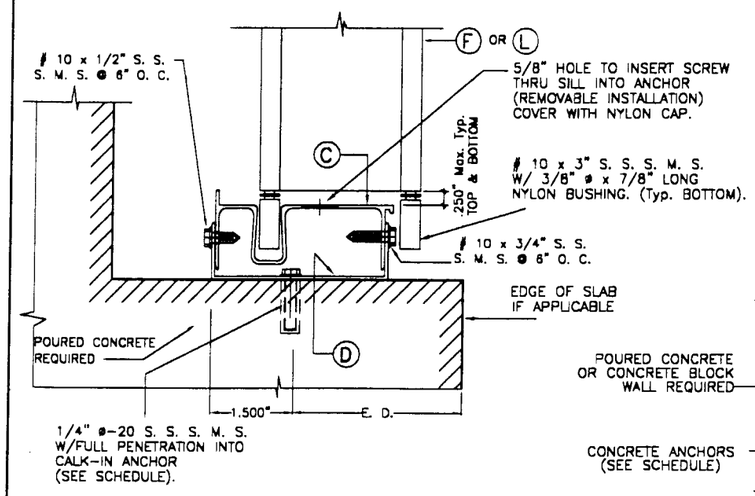

REMOVABLE FLOOR MOUNTING INSTALLATION
– SECTION B1
SCALE: 3/8" = 1"

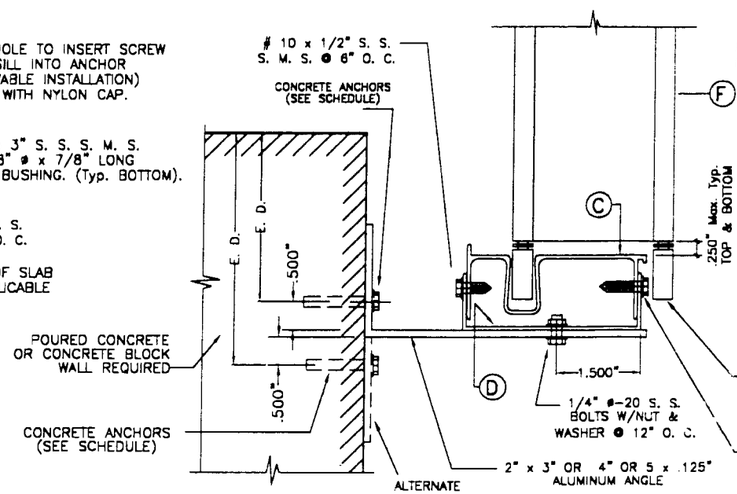

WALL MOUNTING INSTALLATION (OFFSET)
– SECTION C1
SCALE: 3/8" = 1"

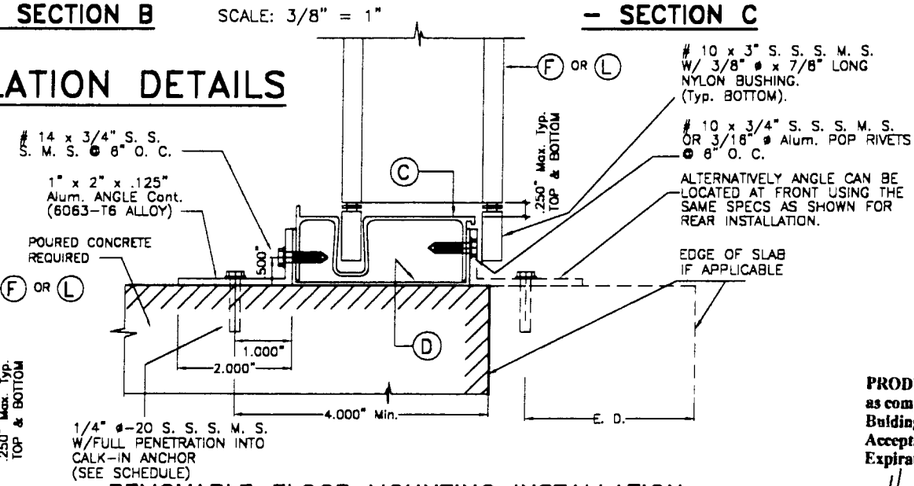

REMOVABLE FLOOR MOUNTING INSTALLATION
– SECTION B2
SCALE: 3/8" = 1"

PRODUCT REVISED
as complying with the Florida Bulding Code
Acceptance No 02-0814.08
Expiration Date 10/17/2006
By Helena A. Molina
Miami Dade Product Control Division

MIAMI-DADE COUNTY

TILLECO INC.
TILLIT TESTING & ENGINEERING COMPANY
6605 N.W. 36th. St., Ste. 217, VIRGINIA GARDENS, FLORIDA 33166
Phone : (305)871-1530 . Fax : (305)871-1531
EB-0006719
WALTER A. TILLIT Jr., P. E.
FLORIDA Lic. # 44167

9/27/02

ASSA / ECONOMY ACCORDION SHUTTER

COULTER HURRICANE PRODUCTS CORPORATION
(ASSA # 18)
9821 N.W. 80th AVE. BAY P-5
HIALEAH GARDENS, FLORIDA 33016

AS SHOWN SCALE

9/24/02 DATE

02-461 DRAWING No

SHEET 2 OF 9

REV. NO	DESCRIPTION	DATE	REV. No	DESCRIPTION	DATE
1	–	–	3	–	–
2	–	–	4	–	–

INSTALLATION DETAILS

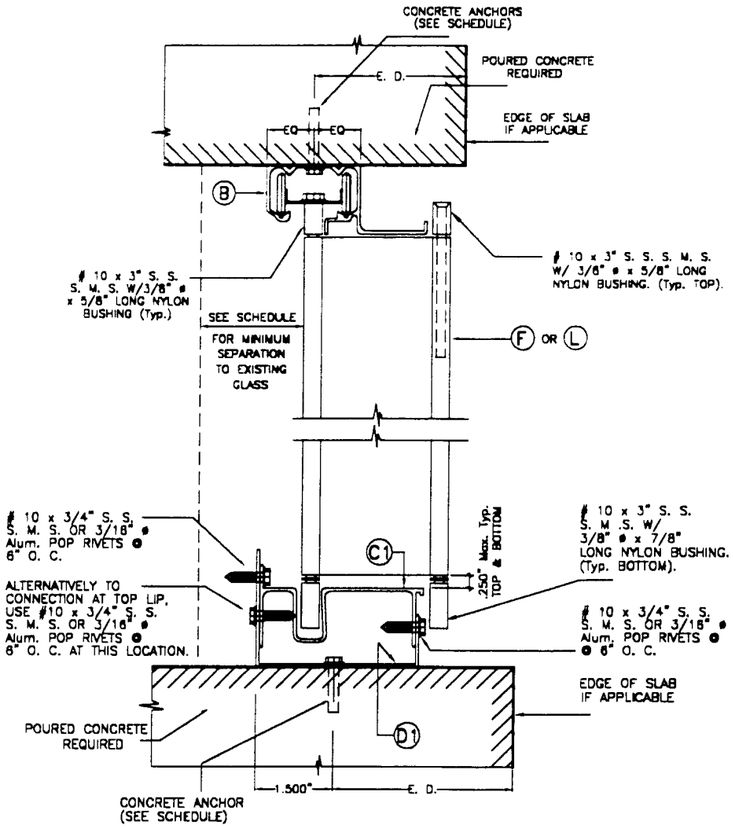

CEILING & FLOOR MOUNTING INSTALLATION – SECTION B'

SCALE: N.T.S.

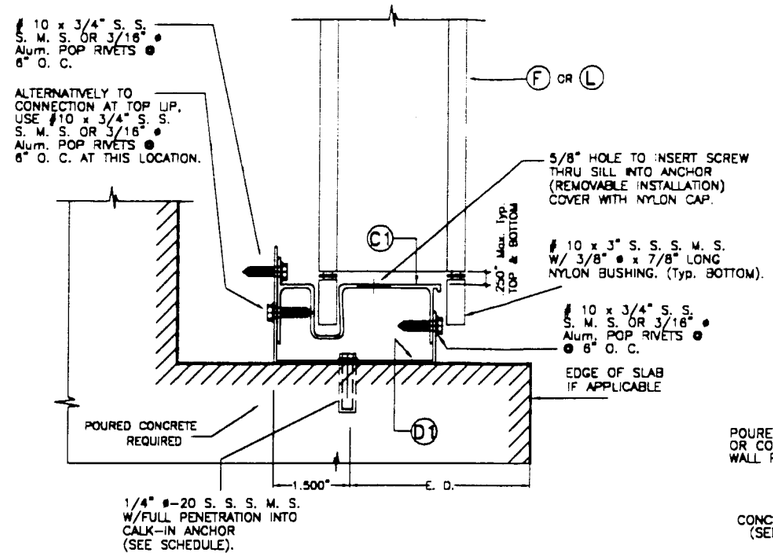

REMOVABLE FLOOR MOUNTING INSTALLATION – SECTION B1'

SCALE: N.T.S.

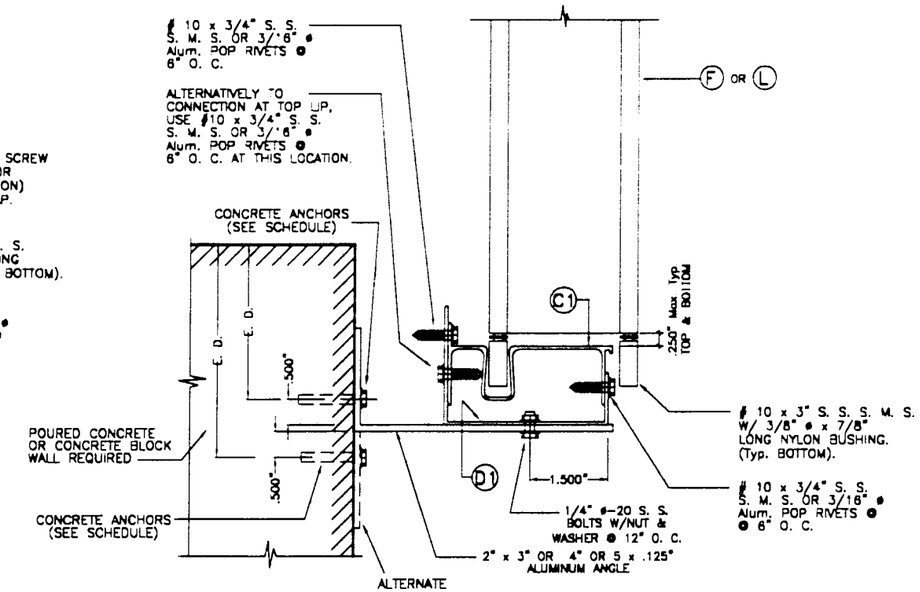

WALL MOUNTING INSTALLATION (OFFSET) – SECTION C1'

SCALE: N.T.S.

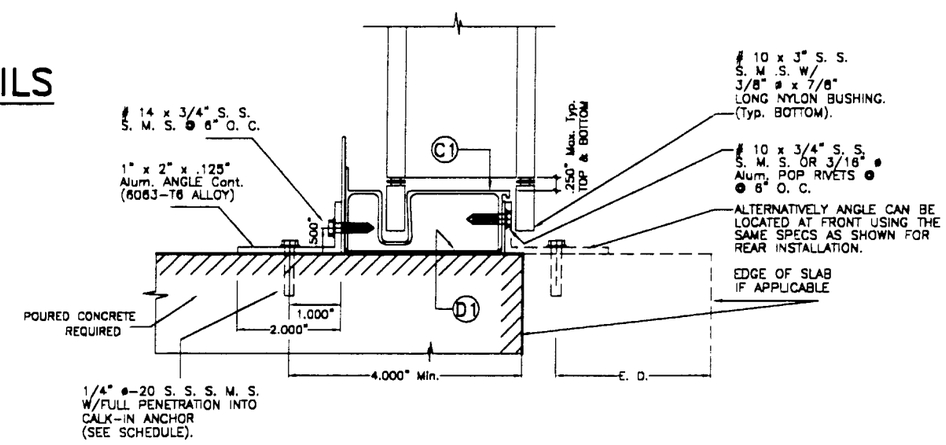

REMOVABLE FLOOR MOUNTING INSTALLATION – SECTION B2'

SCALE: N.T.S.

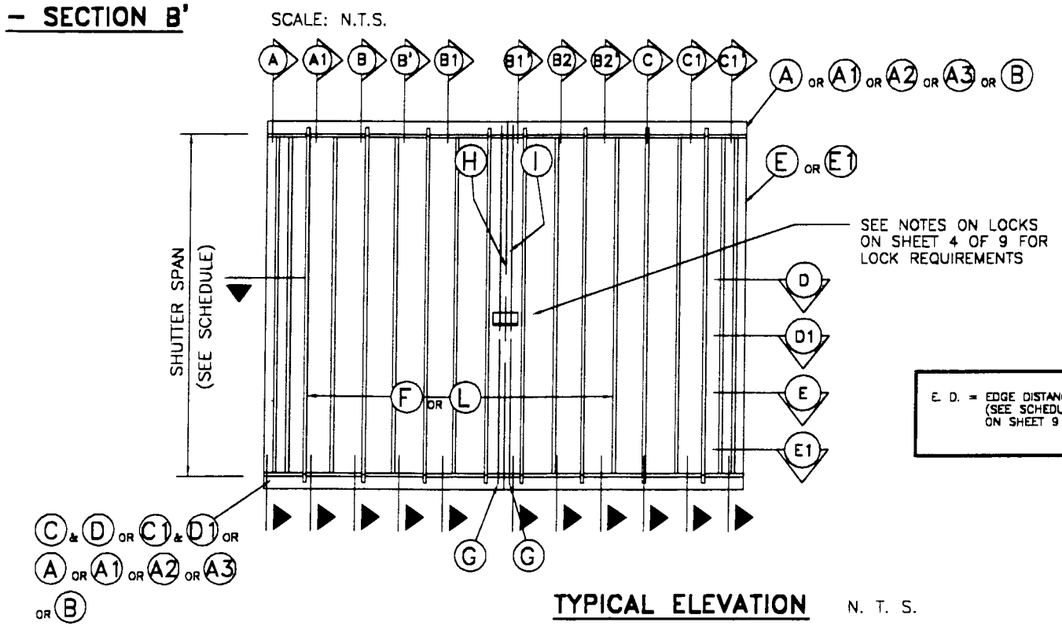

TYPICAL ELEVATION

N. T. S.

E. D. = EDGE DISTANCE (SEE SCHEDULE ON SHEET 9 OF 9)

PRODUCT REVISED
as complying with the Florida Building Code
Acceptance No 02-0814.08
Expiration Date 10/17/2006
By Helena A. Melo
Miami Dade Product Control Division

MIAMI-DADE COUNTY

9/27/02

TILTECO INC.
TILLIT TESTING & ENGINEERING COMPANY
6565 N.W. 36th. St. Ste. 217, VIRGINIA GARDENS, FLORIDA 33166
Phone : (305)871-1530 . Fax : (305)871-1531
EB-0006719
WALTER A. TILLIT Jr., P. E.
FLORIDA Lic. # 44167

ASSA / ECONOMY ACCORDION SHUTTER	AS SHOWN SCALE
COULTER HURRICANE PRODUCTS CORPORATION (ASSA # 18) 9821 N.W. 80th AVE. BAY P-5 HIALEAH GARDENS, FLORIDA 33016	9/24/02 DATE
	02-461 DRAWING No
	SHEET 3 OF 9

REV. NO	DESCRIPTION	DATE	REV. No	DESCRIPTION	DATE
1	–	–	3	–	–
2	–	–	4	–	–

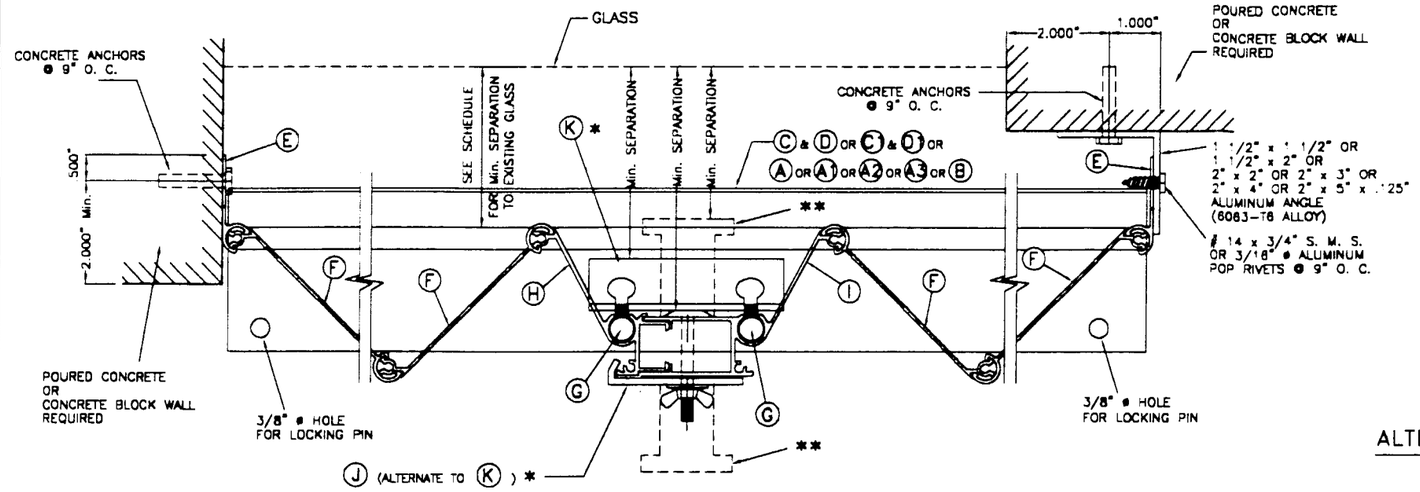

SECTION D

NOTE : SEE NOTES ON LOCKS ON THIS SHEET, VALID ALSO FOR SECTION E1 AND ONE SIDED SHUTTER.

SCALE: N.T.S.

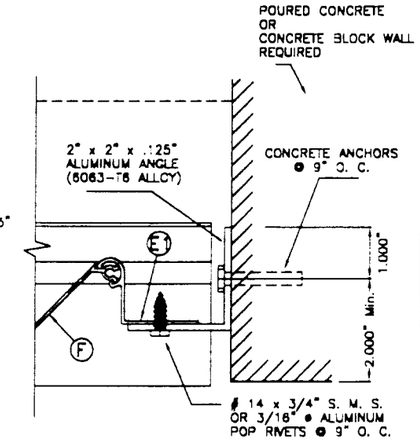

ALTERNATE CLOSURE DETAIL W/ Ⓔ1

SCALE: 3/4" = 1"

NOTES ON LOCKS :

- INSIDE LOCKER Ⓚ OR OUTSIDE LOCKER Ⓙ SHALL ALWAYS BE USED FOR ANY SPAN AT INSTALLATIONS WITHIN THE FIRST 30 FEET OF BUILDING, AND FOR SHUTTER SPANS GREATER THAN 8'-0", FOR INSTALLATIONS ABOVE 30 FEET ELEVATION OF BUILDING MEASURED AT BOTTOM OF SHUTTER.
  INSIDE LOCKER Ⓚ SHALL BE ATTACHED TO Ⓗ & Ⓘ BY MEANS OF 2 THUMB SCREWS ONLY WHEN USING Ⓚ LOCKER.
  OUTSIDE LOCKER Ⓙ MAY BE USED AS AN INSIDE LOCKER IF ATTACHED TO Ⓗ & Ⓘ W/ 1/4" ø-20 x 1" LONG S. S. THREADED BOLT W/ 1/4" ø-20 x 5/8" INTERNALLY THREADED ALUMINUM RIVNUT. SEE INSTALLATION DETAIL ON THIS SHEET.
  OUTSIDE LOCKER Ⓙ SHALL BE ATTACHED THRU Ⓗ & Ⓘ W/ 1/4" ø-20 S. S. SIDEWALK BOLT W/ 7/8" WING NUT OR W/ 1/4" ø-20 x 1" LONG S. S. THREADED BOLT W/ 1/4" ø-20 x 5/8" INTERNALLY THREADED ALUMINUM RIVNUT. SEE INSTALLATION DETAIL ON THIS SHEET.

**

a). FOR INSTALLATIONS WITHIN THE FIRST 30 FEET ELEVATION OF BUILDING MEASURED AT BOTTOM OF SHUTTER AND IN ADDITION TO EITHER Ⓚ OR Ⓙ USED LOCKERS, A REGULAR T LOCK MAY BE USED FOR SECURITY PURPOSES AT ANY DESIRED LOCATION OF CENTERMATE (INSIDE OR OUTSIDE).
WHEN USED INSIDE, MINIMUM SEPARATION TO GLASS SHALL ALSO BE VERIFIED FROM THE TIP OF SUCH T LOCK OR FROM THE OTHER SHUTTER COMPONENTS SHOWN ON SECTION D (WHICHEVER IS MORE CRITICAL).

b). FOR INSTALLATIONS ABOVE 30 FEET ELEVATION OF BUILDING MEASURED AT BOTTOM OF SHUTTER AND SHUTTER SPANS UP TO 8'-0", ONE T LOCK MAY BE USED IN LIEU OF LOCKERS Ⓚ OR Ⓙ AT MIDSPAN OF CENTERMATE FACING OUTSIDE OR INSIDE.
WHEN USED INSIDE, MINIMUM SEPARATION TO GLASS SHALL ALSO BE VERIFIED FROM THE TIP OF SUCH T LOCK OR FROM THE OTHER SHUTTER COMPONENTS SHOWN ON SECTION D (WHICHEVER IS MORE CRITICAL).

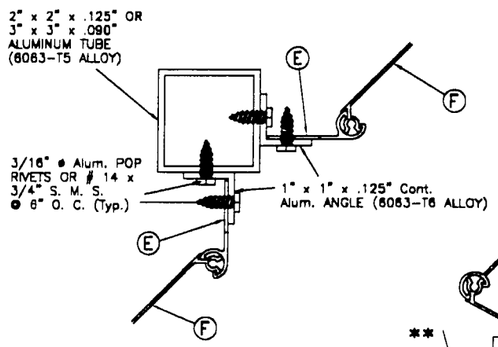

SECTION E

SCALE: N.T.S.

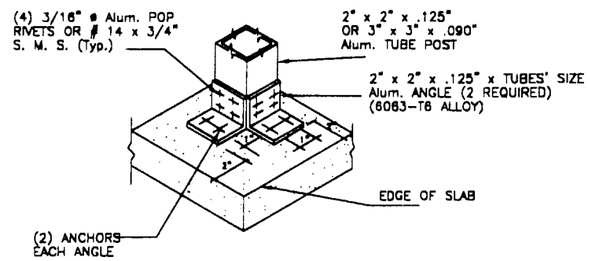

ISOMETRIC (CORNER POST) (Typ. AT TOP & BOTTOM SLABS)

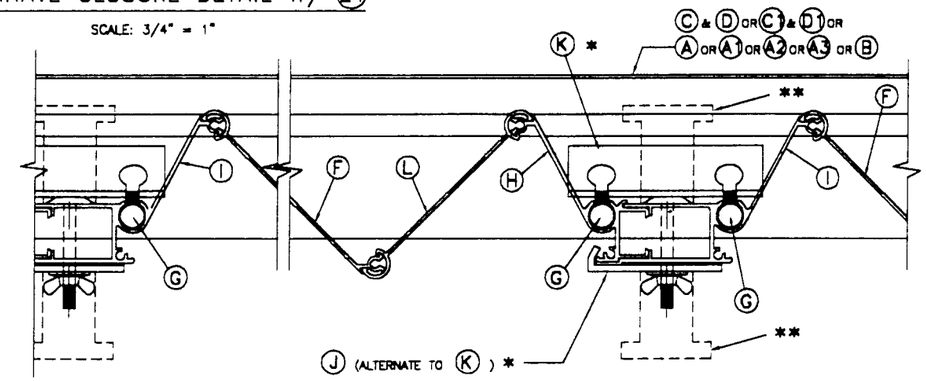

SECTION D1 (MULTIPLE SHUTTERS)

SCALE: N.T.S.

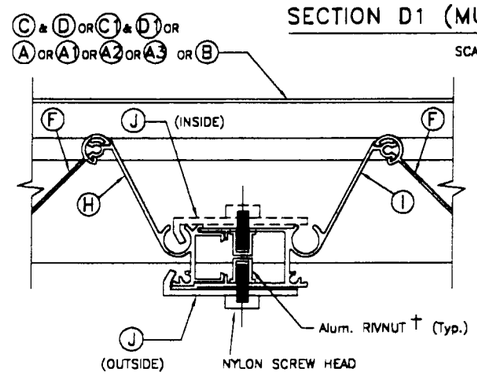

†: SERIES 9444 ALUMINUM (2024-T3 ALLOY) LARGE FLANGE THIN SHEET NUTSERT, PART # 0820, AS MANUFACTURED BY AVDEL CHERRY TEXTORN, PARSIPPENY, NEW JERSEY 07054 OR EQUAL.

ALTERNATE USE OF Ⓙ LOCKER W/ RIVNUT † AS INSIDE OR OUTSIDE LOCKER

SCALE: N.T.S.

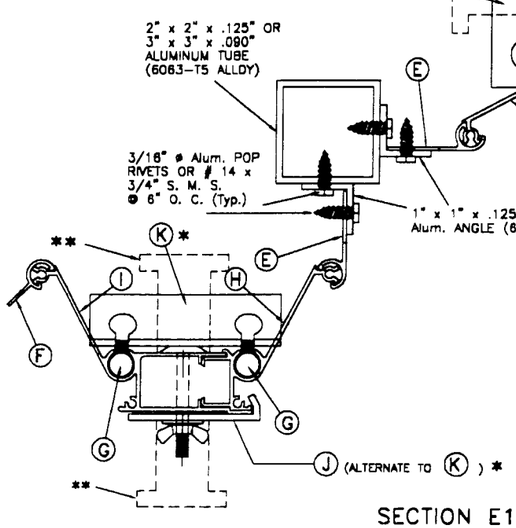

SECTION E1

SCALE: N.T.S.

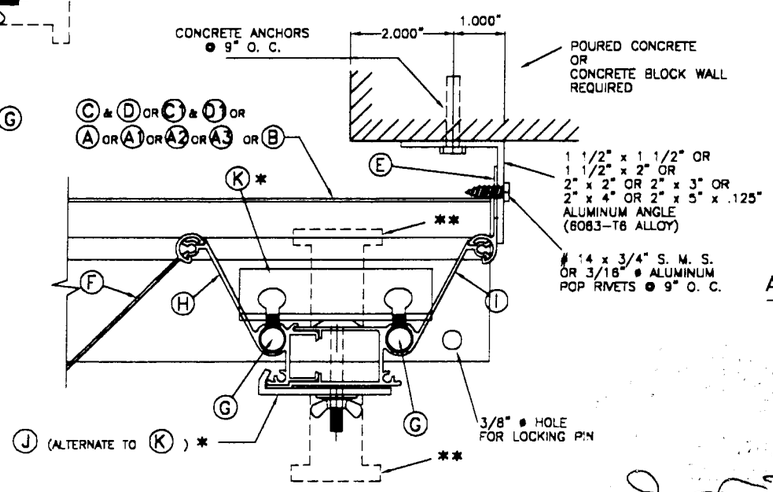

ONE SIDED SHUTTER: END CONNECTION DETAIL

SCALE: N.T.S.

9/27/02

PRODUCT REVISED
as complying with the Florida Building Code
Acceptance No 02-0814.08
Expiration Date 10/17/2006
By Helena A. Molina
Miami Dade Product Control Division

MIAMI-DADE COUNTY

TILTECO INC.
TILLIT TESTING & ENGINEERING COMPANY
6585 N.W. 36th. St., Ste. 217, VIRGINIA GARDENS, FLORIDA 33166
Phone : (305)871-1530 . Fax : (305)871-1531
EB-0006719
WALTER A. TILLIT Jr., P. E.
FLORIDA Lic. # 44167

ASSA / ECONOMY ACCORDION SHUTTER

AS SHOWN SCALE

COULTER HURRICANE PRODUCTS CORPORATION
(ASSA # 18)
9821 N.W. 80th AVE. BAY P-5
HIALEAH GARDENS, FLORIDA 33016

9/24/02 DATE

02-461 DRAWING No

REV. NO	DESCRIPTION	DATE	REV. No	DESCRIPTION	DATE
1	-	-	3	-	-
2	-	-	4	-	-

SHEET 4 OF 9

INSTALLATION DETAILS ON EXISTING WOOD BUILDINGS

NOTES:

1. INSTALLATIONS ARE ONLY VALID FOR BUILDINGS WITH DESIGN LOAD UP TO 75.3 p.s.f. AND 9'-0" Max. SHUTTER SPAN.
2. NEW 2" x 6" P. T. TO BE SOUTHERN PINE No. 2, SURFACED DRY WITH 19 % M. M. C. W/ SPECIFIC DENSITY OF 0.55.
3. FOR NEW WOOD FRAME CONSTRUCTION: WOOD MEMBERS TO BE SOUTHERN PINE No. 2, W/ SPECIFIC DENSITY OF 0.55 OR EQUAL.

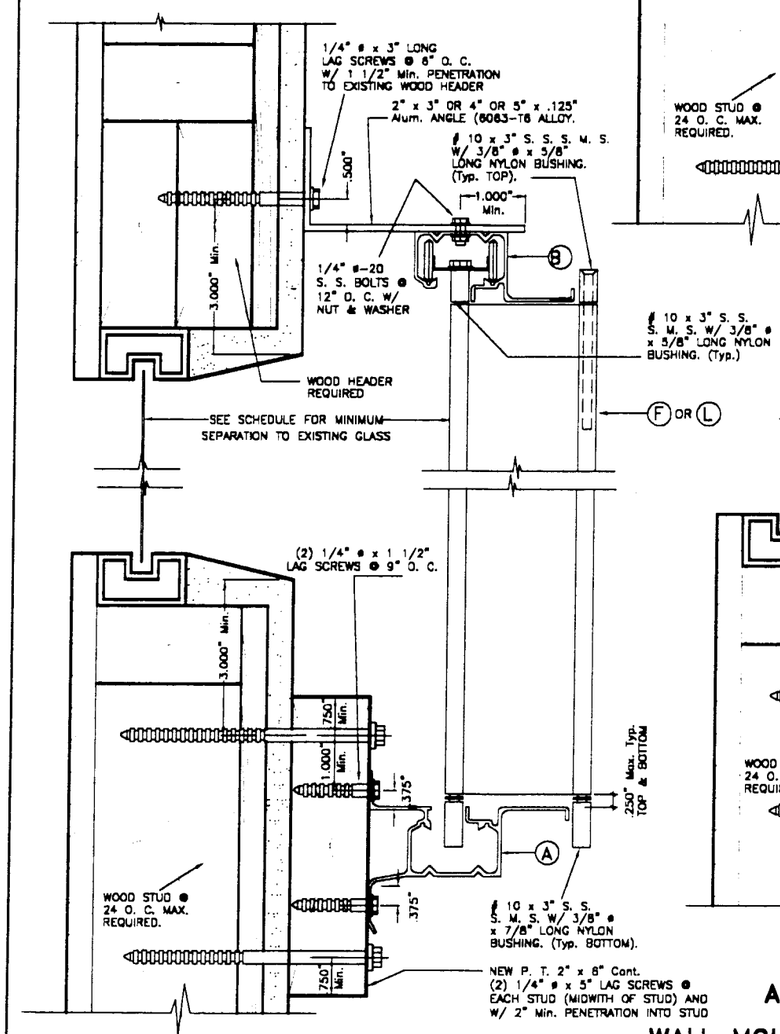

ALTERNATIVE 1

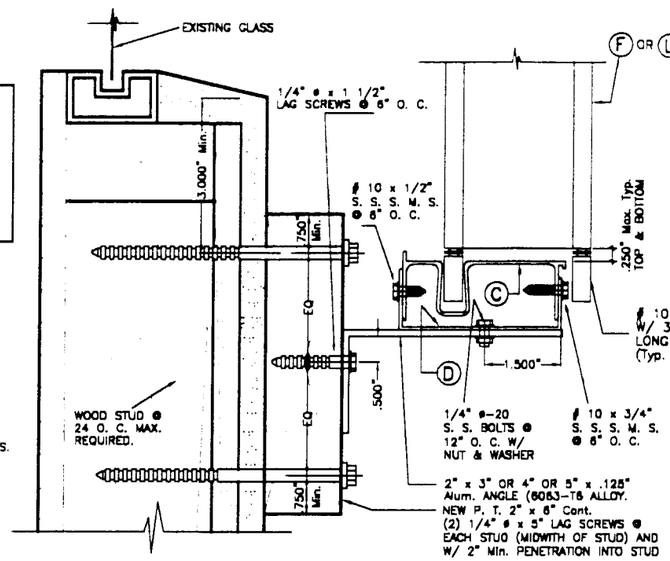

ALTERNATIVE 2

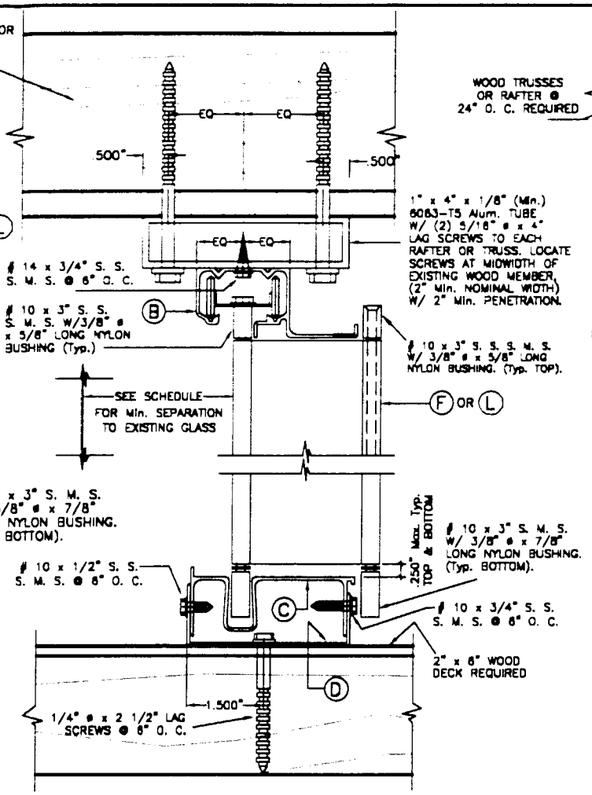

CEILING & FLOOR MOUNTING INSTALLATION – SECTION B

SCALE: N.T.S.

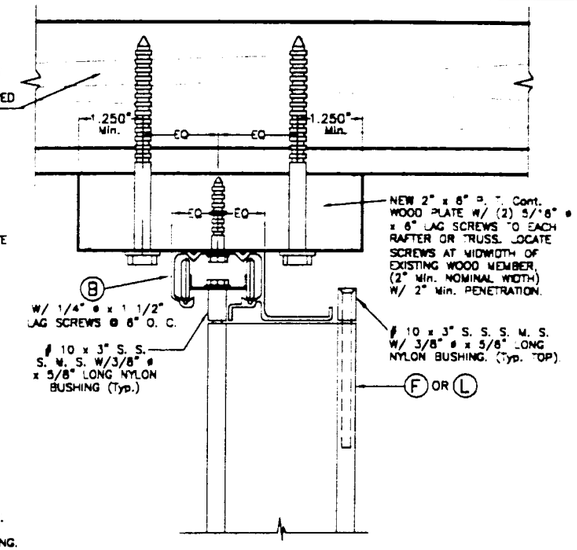

CEILING MOUNTING INSTALLATION – SECTION B1

SCALE: N.T.S.

NOTE :

SECTIONS B & B1 CAN BE COMBINED AS APPLICABLE.

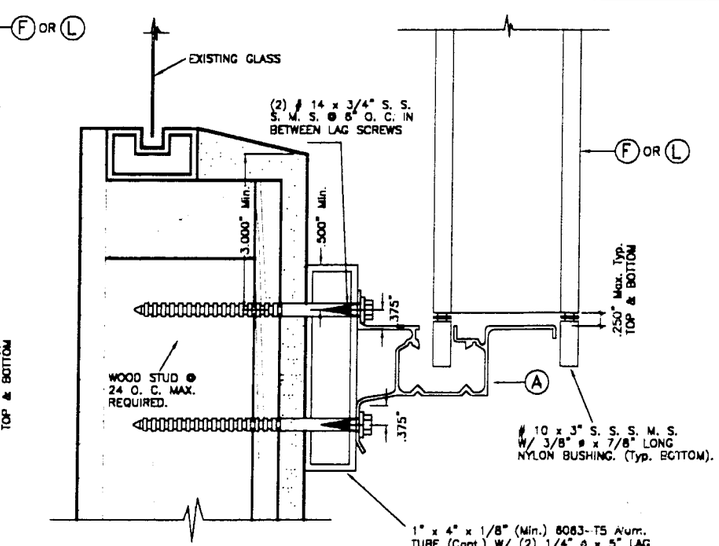

ALTERNATIVE 3

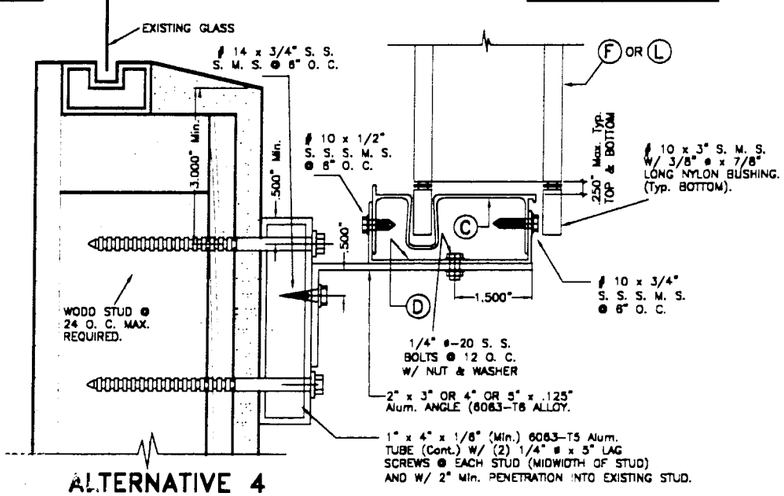

ALTERNATIVE 4

WALL MOUNTING INSTALLATION (OFFSET) – SECTION A

SCALE: N.T.S.

PRODUCT REVISED
as complying with the Florida Building Code
Acceptance No 02-0814.08
Expiration Date 10/17/2006
By Helena A. Molina
Miami Dade Product Control Division

MIAMI-DADE COUNTY

9/27/02

TILTECO INC.
TILLIT TESTING & ENGINEERING COMPANY
6563 N.W. 36th. St., Ste. 217, VIRGINIA GARDENS, FLORIDA 33166
Phone : (305)871-1530 . Fax : (305)871-1531
EB-0006719
WALTER A. TILLIT Jr., P. E.
FLORIDA Lic. # 44167

ASSA / ECONOMY ACCORDION SHUTTER

COULTER HURRICANE PRODUCTS CORPORATION
(ASSA # 16)
9821 N.W. 80th AVE. BAY P-5
HIALEAH GARDENS, FLORIDA 33016

AS SHOWN SCALE

9/24/02 DATE

02-461 DRAWING No

SHEET 5 OF 9

REV. NO	DESCRIPTION	DATE	REV. No	DESCRIPTION	DATE
1	–	–	3	–	–
2	–	–	4	–	–

INSTALLATION DETAILS ON EXISTING WOOD BUILDINGS

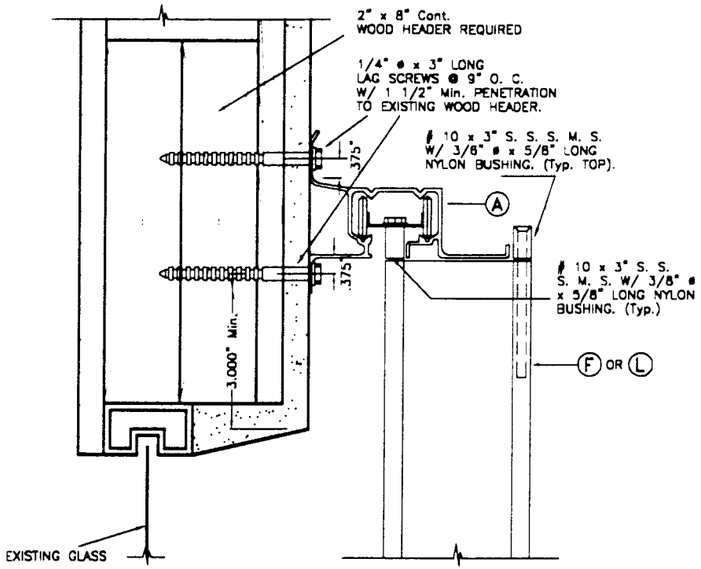

WALL MOUNTING INSTALLATION – SECTION A1

SCALE: N.T.S.

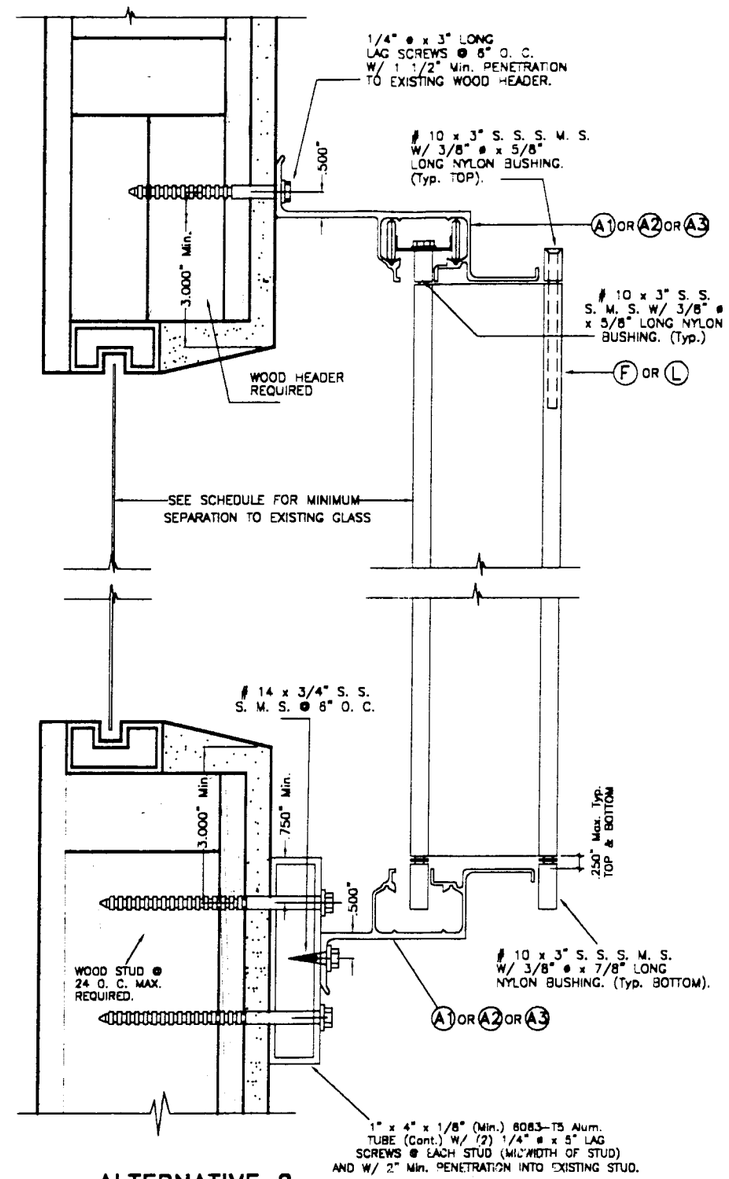

ALTERNATIVE 2

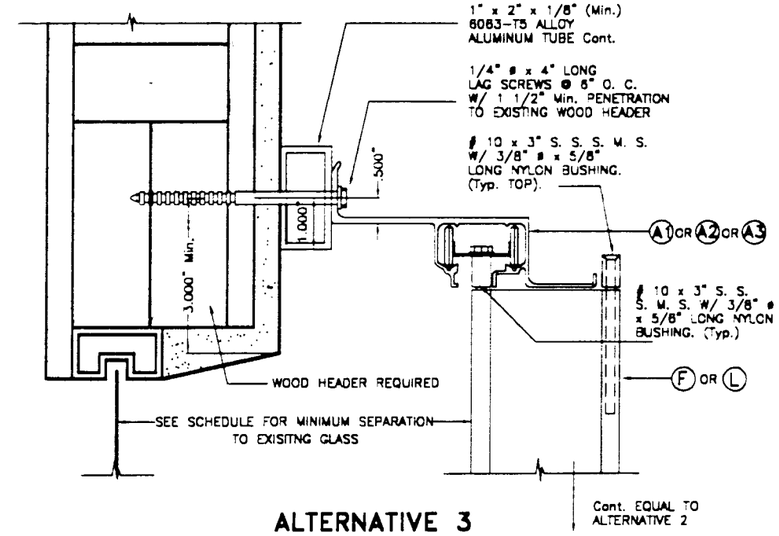

ALTERNATIVE 3

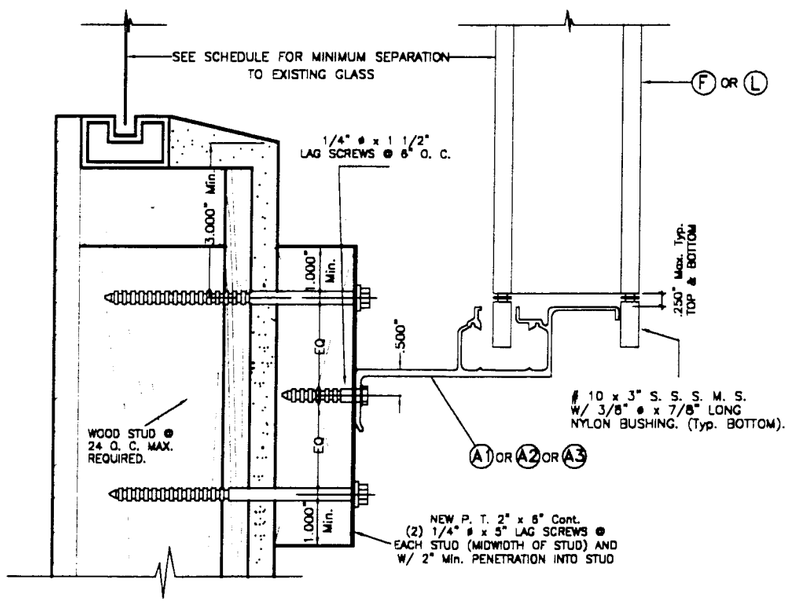

ALTERNATIVE 1

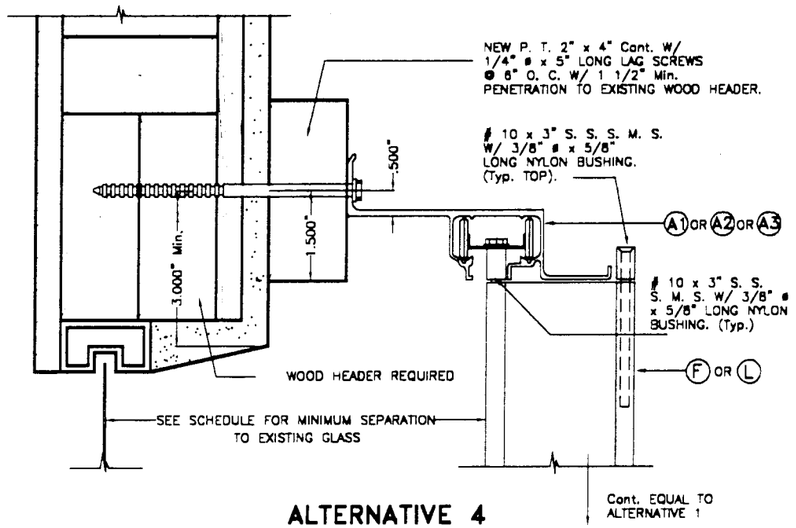

ALTERNATIVE 4

PRODUCT REVISED
as complying with the Florida Building Code
Acceptance No 02-0814.08
Expiration Date 10/17/2006
By Helena A. Molina
Miami Dade Product Control Division

MIAMI-DADE COUNTY

NOTES:

1. INSTALLATIONS ARE ONLY VALID FOR BUILDINGS WITH DESIGN LOAD UP TO 75.3 p.s.f. AND 9'-0" Max. SHUTTER SPAN.
2. NEW 2" x 6" P. T. TO BE SOUTHERN PINE No. 2, SURFACED DRY WITH 19 % M. M. C. W/ SPECIFIC DENSITY OF 0.55.
3. FOR NEW WOOD FRAME CONSTRUCTION: WOOD MEMBERS TO BE SOUTHERN PINE No. 2, W/ SPECIFIC DENSITY OF 0.55 OR EQUAL.

WALL MOUNTING INSTALLATION (OFFSET) – SECTION A2

SCALE: N.T.S.

9/27/02

TILTECO INC.
TILLIT TESTING & ENGINEERING COMPANY
6565 N.W. 36th. St., Ste. 217, VIRGINIA GARDENS, FLORIDA 33166
Phone : (305)871-1530 . Fax : (305)871-1531
EB-0006719
WALTER A. TILLIT Jr., P. E.
FLORIDA Lic. # 44167

ASSA / ECONOMY ACCORDION SHUTTER

COULTER HURRICANE PRODUCTS CORPORATION
(ASSA # 18)
9821 N.W. 80th AVE. BAY P-5
HIALEAH GARDENS, FLORIDA 33016

AS SHOWN SCALE

9/24/02 DATE

02-461 DRAWING No

SHEET 6 OF 9

REV. NO	DESCRIPTION	DATE	REV. No	DESCRIPTION	DATE
1	–	–	3	–	–
2	–	–	4	–	–

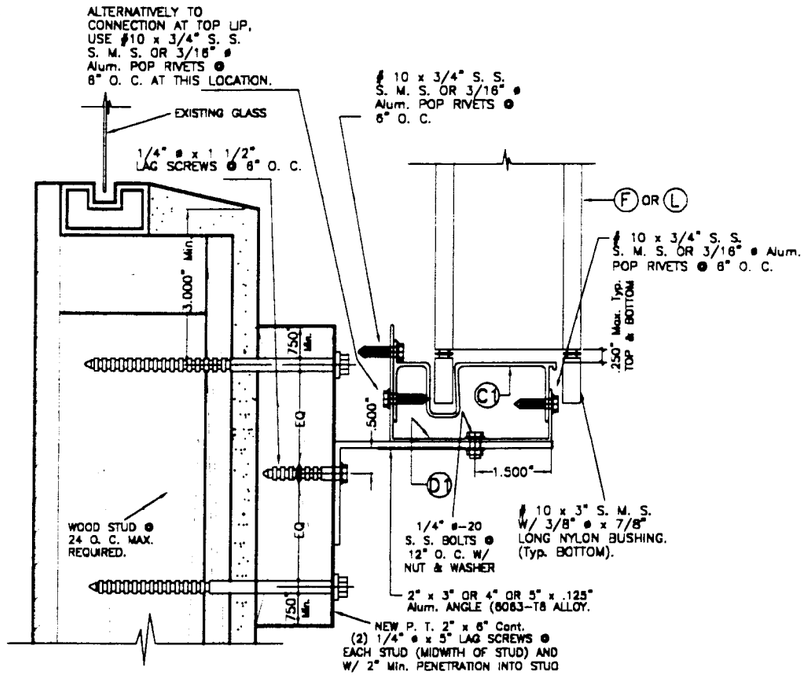

ALTERNATIVE 1

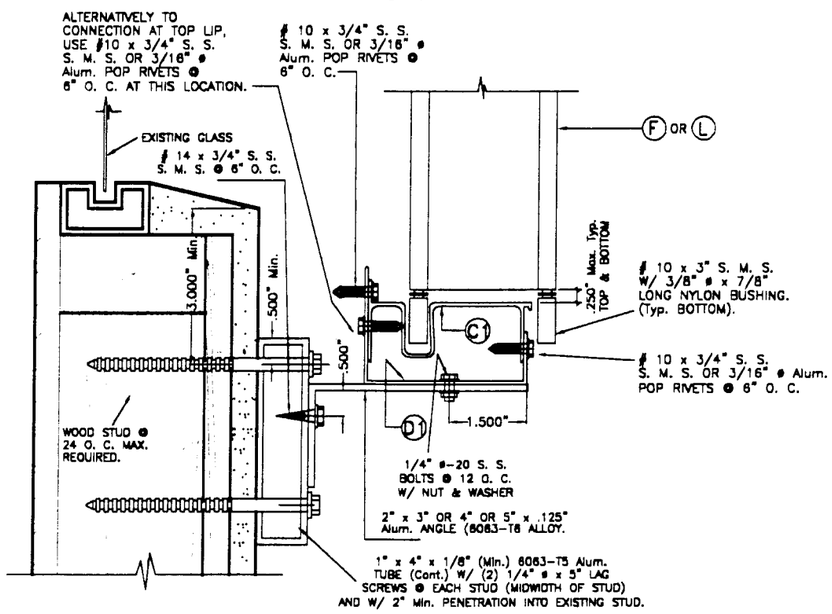

ALTERNATIVE 2

WALL MOUNTING INSTALLATION (OFFSET) – SECTION A'

SCALE: N.T.S.

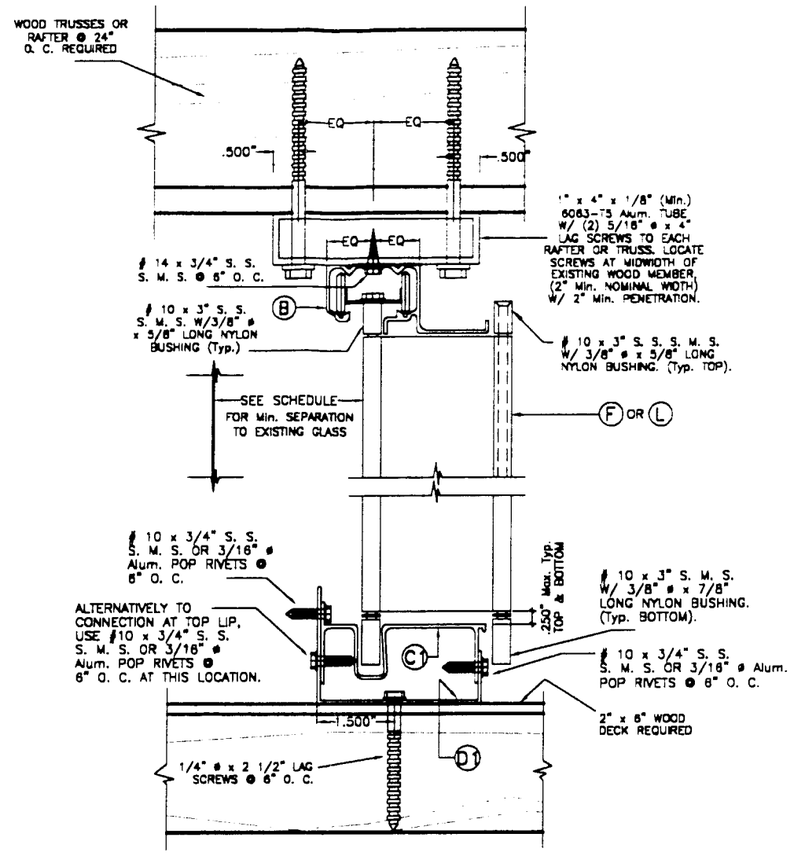

CEILING & FLOOR MOUNTING INSTALLATION – SECTION B'

SCALE: N.T.S.

NOTES:

1. INSTALLATIONS ARE ONLY VALID FOR BUILDINGS WITH DESIGN LOAD UP TO 75.3 p.s.f. AND 9'-0" Max. SHUTTER SPAN.
2. NEW 2" x 6" P. T. TO BE SOUTHERN PINE No. 2, SURFACED DRY WITH 19 % M. M. C. W/ SPECIFIC DENSITY OF 0.55.
3. FOR NEW WOOD FRAME CONSTRUCTION: WOOD MEMBERS TO BE SOUTHERN PINE No. 2, W/ SPECIFIC DENSITY OF 0.55 OR EQUAL.

INSTALLATION DETAILS ON EXISTING WOOD BUILDINGS

PRODUCT REVISED
as complying with the Florida Building Code
Acceptance No 02-0814.08
Expiration Date 10/17/2006
By Helena A. Molina
Miami Dade Product Control Division

MIAMI-DADE COUNTY

9/27/02

TILTECO INC.
TILLIT TESTING & ENGINEERING COMPANY
8585 N.W. 38th. St., Ste. 217, VIRGINIA GARDENS, FLORIDA 33166
Phone : (305)871-1530 . Fax : (305)871-1531
EB-0006719
WALTER A. TILLIT Jr., P. E.
FLORIDA Lic. # 44167

ASSA / ECONOMY ACCORDION SHUTTER

AS SHOWN SCALE

COULTER HURRICANE PRODUCTS CORPORATION
(ASSA # 18)
9821 N.W. 80th AVE. BAY P-5
HIALEAH GARDENS, FLORIDA 33016

9/24/02 DATE

02-461 DRAWING No

REV. NO	DESCRIPTION	DATE	REV. No	DESCRIPTION	DATE
1	–	–	3	–	–
2	–	–	4	–	–

SHEET 7 OF 9

MAXIMUM DESIGN PRESSURE RATING "W" (p.s.f.) AND CORRESPONDING MAXIMUM SPAN SCHEDULE.

(VALID FOR SECTIONS A, A1, B, B1, B2, C & C1 ON SHEET 2 OF 9).

NOTE: DESIGN PRESSURE RATING CORRESPONDS ONLY TO NEGATIVE PRESSURE (SUCTION) LOADS, IN ACCORDANCE WITH ASCE 7-98 CRITERIA FOR A GIVEN OPENING. IF NEGATIVE PRESSURE VALUES COMPLY WITH THE REQUIRED PRESSURE FOR THE OPENING, THE POSITIVE PRESSURE WILL AUTOMATICALLY QUALIFY AND NEED NOT TO BE CHECKED.

MAXIMUM DESIGN LOAD "W" (p.s.f.)	MAXIMUM PANEL SPAN (ft.)		MINIMUM SEPARATION TO GLASS (in.)	
	*	**	*	**
45.1	12'-0"	13'-0"	4"	2 1/2"
47.8	12'-0"	12'-8"	4"	2 1/2"
49.0	12'-0"	12'-6"	4"	2 1/2"
50.5	12'-0"	12'-4"	4"	2 1/2"
52.0	12'-0"	12'-2"	4"	2 1/2"
52.4	12'-0"	12'-1"	4"	2 1/2"
55.0	11'-10"	11'-10"	4"	2 1/4"
55.2	11'-10"	11'-10"	4"	2 1/4"
55.6	11'-4"	11'-9"	4"	2 1/4"
57.2	11'-4"	11'-7"	4"	2 1/4"
58.8	11'-4"	11'-5"	4"	2 1/4"
58.8	11'-4"	11'-5"	4"	2 1/4"
59.5	11'-4"	11'-4"	4"	2 1/4"
59.7	11'-4"	11'-4"	4"	2 1/8"
61.5	11'-2"	11'-2"	4"	2 1/8"
61.8	11'-1"	11'-1"	4"	2 1/8"
61.9	11'-1"	11'-1"	4"	2 1/8"
63.4	11'-0"	11'-0"	4"	2 1/8"
63.6	11'-0"	11'-0"	4"	2 1/8"
63.7	11'-0"	11'-0"	4"	2 1/8"
66.9	10'-8"	10'-8"	4"	2"
67.0	10'-8"	10'-8"	4"	2"

MAXIMUM DESIGN LOAD "W" (p.s.f.)	MAXIMUM PANEL SPAN (ft.)		MINIMUM SEPARATION TO GLASS (in.)	
	*	**	*	**
67.5	10'-8"	10'-8"	4"	2"
70.1	10'-6"	10'-6"	4"	2"
71.1	10'-5"	10'-5"	4"	2"
71.4	10'-4"	10'-4"	4"	2"
71.5	10'-4"	10'-4"	4"	2"
72.9	10'-3"	10'-3"	4"	2"
75.1	10'-1"	10'-1"	4"	2"
75.2	10'-1"	10'-1"	4"	2"
75.3	10'-1"	10'-1"	4"	2"
77.0	10'-0"	10'-0"	3 1/2"	2"
77.5	9'-11"	9'-11"	3 1/2"	2"
78.8	9'-10"	9'-10"	3 1/2"	2"
80.7	9'-9"	9'-9"	3 1/2"	2"
81.5	9'-8"	9'-8"	3 1/2"	2"
82.5	9'-8"	9'-8"	3 1/2"	2"
83.4	9'-7"	9'-7"	3 1/2"	2"
86.2	9'-5"	9'-5"	3 1/2"	2"
86.7	9'-5"	9'-5"	3 1/2"	2"
88.8	9'-5"	9'-5"	3 1/2"	2"
88.5	9'-4"	9'-4"	3 1/2"	2"
90.3	9'-3"	9'-3"	3 1/2"	2"
90.8	9'-2"	9'-2"	3 1/2"	2"

MAXIMUM DESIGN LOAD "W" (p.s.f.)	MAXIMUM PANEL SPAN (ft.)		MINIMUM SEPARATION TO GLASS (in.)	
	*	**	*	**
91.4	9'-2"	9'-2"	3 1/2"	2"
92.7	9'-1"	9'-1"	3 1/2"	2"
93.8	9'-0"	9'-0"	2 7/8"	2"
94.8	9'-0"	9'-0"	2 7/8"	2"
96.6	8'-11"	8'-11"	2 7/8"	2"
98.8	8'-11"	8'-11"	2 7/8"	2"
97.7	8'-10"	8'-10"	2 7/8"	2"
100.5	8'-9"	8'-9"	2 7/8"	2"
101.5	8'-8"	8'-8"	2 7/8"	2"
103.7	8'-7"	8'-7"	2 7/8"	2"
106.5	8'-6"	8'-6"	2 7/8"	2"
108.8	8'-5"	8'-5"	2 7/8"	2"
110.8	8'-4"	8'-4"	2 7/8"	2"
111.0	8'-4"	8'-4"	2 7/8"	2"
114.1	8'-2"	8'-2"	2 7/8"	2"
116.5	8'-2"	8'-2"	2 7/8"	2"
118.9	8'-1"	8'-1"	2 7/8"	2"
117.8	8'-1"	8'-1"	2 7/8"	2"
119.7	8'-0"	8'-0"	2 7/8"	2"
120.0	8'-0"	8'-0"	2 7/8"	2"
121.2	7'-10"	7'-10"	2 7/8"	2"
122.5	7'-9"	7'-9"	2 7/8"	2"

MAXIMUM DESIGN LOAD "W" (p.s.f.)	MAXIMUM PANEL SPAN (ft.)		MINIMUM SEPARATION TO GLASS (in.)	
	*	**	*	**
125.3	7'-7"	7'-7"	2 7/8"	2"
125.8	7'-6"	7'-6"	2 7/8"	2"
126.7	7'-6"	7'-6"	2 7/8"	2"
129.6	7'-4"	7'-4"	2 7/8"	2"
130.9	7'-3"	7'-3"	2 7/8"	2"
131.6	7'-2"	7'-2"	2 7/8"	2"
134.3	7'-1"	7'-1"	2 7/8"	2"
136.2	6'-11"	6'-11"	2 7/8"	2"
137.9	6'-10"	6'-10"	2 7/8"	2"
140.7	6'-9"	6'-9"	2 7/8"	2"
142.8	6'-7"	6'-7"	2 7/8"	2"
143.5	6'-7"	6'-7"	2 7/8"	2"
147.0	6'-5"	6'-5"	2 7/8"	2"
148.4	6'-4"	6'-4"	2 7/8"	2"
152.6	6'-2"	6'-2"	2 7/8"	2"
153.1	6'-2"	6'-2"	2 7/8"	2"
156.8	6'-0"	6'-0"	2 7/8"	2"
157.5	6'-0"	6'-0"	2 7/8"	2"
157.8	6'-0"	6'-0"	2 7/8"	2"
160.8	5'-11"	5'-11"	2 7/8"	2"
161.7	5'-10"	5'-10"	2 7/8"	2"
164.4	5'-9"	5'-9"	2 7/8"	2"

MAXIMUM DESIGN LOAD "W" (p.s.f.)	MAXIMUM PANEL SPAN (ft.)		MINIMUM SEPARATION TO GLASS (in.)	
	*	**	*	**
165.2	5'-9"	5'-9"	2 7/8"	2"
168.1	5'-8"	5'-8"	2 7/8"	2"
168.7	5'-7"	5'-7"	2 7/8"	2"
170.0	5'-7"	5'-7"	2 7/8"	2"
175.6	5'-5"	5'-5"	2 7/8"	2"
178.6	5'-4"	5'-4"	2 7/8"	2"
180.3	5'-3"	5'-3"	2 7/8"	2"
188.0	5'-0"	5'-0"	2 7/8"	2"
195.2	4'-10"	4'-10"	2 7/8"	2"
197.2	4'-10"	4'-10"	2 7/8"	2"
199.1	4'-9"	4'-9"	2 7/8"	2"
204.7	4'-7"	4'-7"	2 7/8"	2"
211.3	4'-6"	4'-6"	2 7/8"	2"
216.9	4'-4"	4'-4"	2 7/8"	2"
221.6	4'-3"	4'-3"	2 7/8"	2"
226.3	4'-2"	4'-2"	2 7/8"	2"

MAXIMUM DESIGN PRESSURE RATING "W" (p.s.f.) AND CORRESPONDING MAXIMUM ANCHOR SPACING (in.) SCHEDULE. +

(VALID FOR SECTIONS A, A1, B, B1, B2, C & C1 ON SHEET 2 OF 9).

MAXIMUM DESIGN LOAD "W" (p.s.f.)	WALL MOUNTING INSTALLATION AT TOP OR BOTTOM (TO CONCRETE)			WALL MOUNTING INSTALLATION AT TOP OR BOTTOM (TO MASONRY)			FLOOR/CEILING MOUNTING INSTALLATION TOP OR BOTTOM (TO CONCRETE)		
	NOTE 1	NOTE 2	NOTE 3	NOTE 1	NOTE 2	NOTE 3	NOTE 1	NOTE 2	NOTE 3
FROM 45.1 TO 61.8	9"	9"	9"	9"	9"	4 1/2"	9"	9"	8"
	9"	9"	7"	7"	7"	5"	9"	7"	5"
FROM 61.9 TO 75.3	9"	9"	8 1/2"	9"	8"	2 1/2"	9"	9"	7"
	9"	9"	4 1/2"	9"	7"	3"	9"	5 1/2"	4 1/2"
FROM 75.4 TO 91.4	9"	9"	6"	9"	3"	–	9"	7 1/2"	6 1/2"
FROM 91.5 TO 120.0	9"	4 1/2"	4 1/2"	8"	–	–	9"	5 1/2"	5 1/2"
FROM 120.1 TO 168.1	7 1/2"	4 1/2"	–	2 1/2"	–	–	7"	5 1/2"	–
FROM 168.2 TO 226.3	4 1/2"	4 1/2"	–	2" *	–	–	5 1/2"	5 1/2"	–

* VALID FOR UP TO 3'-0" MAXIMUM SPAN.

ANCHOR SPACING LEGEND

(1) Max. ANCHOR SPCG. VALID FOR SPANS OF 5'-0" OR LESS.
(2) Max. ANCHOR SPCG. VALID FOR SPANS GREATER THAN 5'-0" TO 8'-6".
(3) Max. ANCHOR SPCG. VALID FOR SPANS GREATER THAN 8'-6" TO Max. ALLOWED.

\+ USE TAPCON ANCHORS, ZAMAC NAILIN & CALK-INS FOR INSTALLATIONS W/ DESIGN LOADS UP TO 75.3 p.s.f.
USE ONLY TAPCON ANCHORS & CALK-INS FOR INSTALLATIONS W/ DESIGN LOADS GREATER THAN 75.3 p.s.f.
MAXIMUM ANCHOR SPACINGS ARE VALID FOR 3" EDGE DISTANCE. FOR E. D. LESS THAN 3", REDUCE ANCHOR SPACING BY MULTIPLYING SPACINGS SHOWN ON SCHEDULE BY THE FOLLOWING FACTORS. (NOTE : Min. E. D. FOR CALK-IN ANCHORS IS 2 1/2").

ACTUAL E. D.= EDGE DISTANCE	FACTOR
2 1/2"	.75
2"	.50

TAPCON OR CALK-IN	TAPCON OR CALK-IN
ZAMAC NAILIN	
UP TO 75.3 p.s.f.	> 75.3 p.s.f. TO 226.3 p.s.f.

ANCHOR LEGENDS

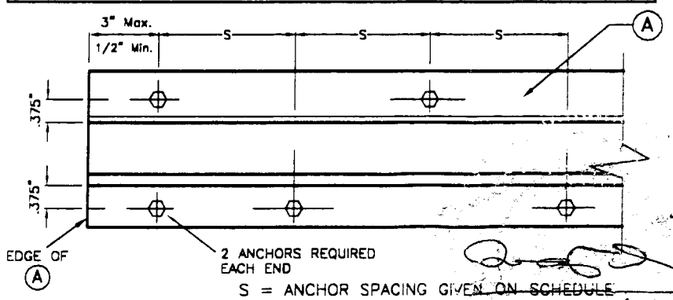

S = ANCHOR SPACING GIVEN ON SCHEDULE

STAGGERED ANCHORS

ANCHORS USED W/TRACK "A" (TOP & BOTTOM) SHALL BE INSTALLED STAGGERED AT Max. SPACINGS INDICATED ON SCHEDULES.

9/27/02

TABLE 1:

MINIMUM SEPARATION BETWEEN GLASS AND SHUTTER FOR A GIVEN SHUTTER SPAN, FOR SHUTTERS INSTALLED WITHIN THE FIRST 30'-0" ABOVE GRADE OF A GIVEN BUILDING. 30'-0" ELEVATION SHALL BE MEASURED AT BOTTOM OF SHUTTER. SEPARATION TO BE MEASURED AS INDICATED ON SECTION D, SHEET 4 OF 9.

SHUTTER SPAN (ft.)	MINIMUM SEPARATION (in.)
LESS OR EQUAL THAN 9'-0"	2 7/8"
> 9'-0" TO 10'-0"	3 1/2"
> 10'-0" TO 12'-0"	4"

* FOR SHUTTERS INSTALLED WITHIN THE FIRST 30'-0" ELEVATION OF BUILDING.
SEE TABLE 1 FOR MINIMUM SEPARATION TO GLASS FOR SPANS SHORTER THAN THE MAXIMUM ALLOWED SHOWN ON SCHEDULE.

** FOR SHUTTERS INSTALLED ABOVE 30'-0" ELEVATION OF BUILDING, MEASURED AT BOTTOM OF SHUTTER.

PRODUCT REVISED
as complying with the Florida Building Code
Acceptance No. 02-0814.08
Expiration Date 10/17/2006
By Helmy A. Moler
Miami Dade Product Control Division

MIAMI-DADE COUNTY

TILTECO INC.
TILLIT TESTING & ENGINEERING COMPANY
8585 N.W. 36th. St., Ste. 217, VIRGINIA GARDENS, FLORIDA 33166
Phone : (305)871-1530 . Fax : (305)871-1531
EB-0006719
WALTER A. TILLIT Jr., P. E.
FLORIDA Lic. # 44167

ASSA / ECONOMY ACCORDION SHUTTER

COULTER HURRICANE PRODUCTS CORPORATION
(ASSA # 18)
9821 N.W. 80th AVE. BAY P-5
HIALEAH GARDENS, FLORIDA 33018

REV. NO	DESCRIPTION	DATE	REV. No	DESCRIPTION	DATE
1	–	–	3	–	–
2	–	–	4	–	–

AS SHOWN SCALE

9/24/02 DATE

02-461 DRAWING No

SHEET 8 OF 9

MAXIMUM DESIGN PRESSURE RATING "W" (p.s.f.) AND CORRESPONDING MAXIMUM SPAN SCHEDULE.

(VALID FOR SECTIONS B', B1', B2' & C1' ON SHEET 3 OF 9).

NOTE: DESIGN PRESSURE RATING CORRESPONDS ONLY TO NEGATIVE PRESSURE (SUCTION) LOADS, IN ACCORDANCE WITH ASCE 7-98 CRITERIA FOR A GIVEN OPENING. IF NEGATIVE PRESSURE VALUES COMPLY WITH THE REQUIRED PRESSURE FOR THE OPENING, THE POSITIVE PRESSURE WILL AUTOMATICALLY QUALIFY AND NEED NOT TO BE CHECKED.

MAXIMUM DESIGN LOAD "W" (p.s.f.)	MAXIMUM PANEL SPAN (ft.)		MINIMUM SEPARATION TO GLASS (in.)	
	*	**	*	**
45.1	12'-0"	13'-3"	4"	3"
47.8	12'-0"	13'-1"	4"	3"
49.0	12'-0"	13'-0"	4"	3"
50.5	12'-0"	12'-11"	4"	3"
52.0	12'-0"	12'-10"	4"	3"
52.4	12'-0"	12'-10"	4"	3"
55.0	12'-0"	12'-7"	4"	3"
55.2	12'-0"	12'-7"	4"	3"
55.6	12'-0"	12'-6"	4"	3"
57.2	12'-0"	12'-4"	4"	2 7/8"
58.6	12'-0"	12'-2"	4"	2 7/8"
58.8	12'-0"	12'-2"	4"	2 7/8"
59.5	12'-0"	12'-1"	4"	2 7/8"
59.7	12'-0"	12'-1"	4"	2 7/8"
61.5	11'-11"	11'-11"	4"	2 3/4"
61.8	11'-10"	11'-10"	4"	2 3/4"
61.9	11'-10"	11'-10"	4"	2 3/4"
63.4	11'-9"	11'-9"	4"	2 3/4"
63.6	11'-8"	11'-8"	4"	2 3/4"
63.7	11'-8"	11'-8"	4"	2 3/4"
66.9	11'-5"	11'-5"	4"	2 3/4"
67.0	11'-5"	11'-5"	4"	2 3/4"

MAXIMUM DESIGN LOAD "W" (p.s.f.)	MAXIMUM PANEL SPAN (ft.)		MINIMUM SEPARATION TO GLASS (in.)	
	*	**	*	**
67.5	11'-4"	11'-4"	4"	2 1/2"
70.1	11'-2"	11'-2"	4"	2 1/2"
71.1	11'-1"	11'-1"	4"	2 1/2"
71.4	11'-0"	11'-0"	4"	2 1/2"
71.5	11'-0"	11'-0"	4"	2 1/2"
72.9	10'-11"	10'-11"	4"	2 1/2"
75.1	10'-9"	10'-9"	4"	2 1/2"
75.2	10'-9"	10'-9"	4"	2 1/2"
75.3	10'-9"	10'-9"	4"	2 1/2"
77.0	10'-8"	10'-8"	4"	2 1/2"
77.5	10'-7"	10'-7"	4"	2 3/8"
78.8	10'-6"	10'-6"	4"	2 3/8"
80.7	10'-5"	10'-5"	4"	2 3/8"
81.5	10'-4"	10'-4"	4"	2 3/8"
82.5	10'-3"	10'-3"	4"	2 3/8"
83.4	10'-3"	10'-3"	4"	2 3/8"
86.2	10'-0"	10'-0"	3 1/2"	2 3/8"
86.7	10'-0"	10'-0"	3 1/2"	2 3/8"
88.8	10'-0"	10'-0"	3 1/2"	2 3/8"
88.5	9'-11"	9'-11"	3 1/2"	2 1/4"
90.3	9'-10"	9'-10"	3 1/2"	2 1/4"
90.8	9'-10"	9'-10"	3 1/2"	2 1/4"

MAXIMUM DESIGN LOAD "W" (p.s.f.)	MAXIMUM PANEL SPAN (ft.)		MINIMUM SEPARATION TO GLASS (in.)	
	*	**	*	**
91.4	9'-9"	9'-9"	3 1/2"	2 1/4"
92.7	9'-8"	9'-8"	3 1/2"	2 1/4"
93.8	9'-8"	9'-8"	3 1/2"	2 1/4"
94.8	9'-7"	9'-7"	3 1/2"	2 1/4"
96.6	9'-6"	9'-6"	3 1/2"	2 1/4"
96.8	9'-6"	9'-6"	3 1/2"	2 1/8"
97.7	9'-5"	9'-5"	3 1/2"	2 1/8"
100.5	9'-4"	9'-4"	3 1/2"	2 1/8"
101.5	9'-3"	9'-3"	3 1/2"	2 1/8"
103.7	9'-2"	9'-2"	3 1/2"	2 1/8"
106.5	9'-0"	9'-0"	2 1/2"	2 1/8"
108.8	8'-11"	8'-11"	2 1/2"	2 1/8"
110.6	8'-11"	8'-11"	2 1/2"	2 1/8"
111.0	8'-10"	8'-10"	2 1/2"	2"
114.1	8'-9"	8'-9"	2 1/2"	2"
116.5	8'-7"	8'-7"	2 1/2"	2"
118.9	8'-6"	8'-6"	2 1/2"	2"
117.6	8'-6"	8'-6"	2 1/2"	2"
119.7	8'-4"	8'-4"	2 1/2"	2"
120.0	8'-4"	8'-4"	2 1/2"	2"
121.2	8'-3"	8'-3"	2 1/2"	2"
122.5	8'-2"	8'-2"	2 1/2"	2"

MAXIMUM DESIGN LOAD "W" (p.s.f.)	MAXIMUM PANEL SPAN (ft.)		MINIMUM SEPARATION TO GLASS (in.)	
	*	**	*	**
125.3	8'-0"	8'-0"	2 1/2"	2"
125.8	7'-11"	7'-11"	2 1/2"	2"
126.7	7'-11"	7'-11"	2 1/2"	2"
129.6	7'-8"	7'-8"	2 1/2"	2"
130.9	7'-8"	7'-8"	2 1/2"	2"
131.6	7'-7"	7'-7"	2 1/2"	2"
134.3	7'-5"	7'-5"	2 1/2"	2"
136.2	7'-4"	7'-4"	2 1/2"	2"
137.9	7'-3"	7'-3"	2 1/2"	2"
140.7	7'-1"	7'-1"	2 1/2"	2"
142.8	7'-0"	7'-0"	2 1/2"	2"
143.5	6'-11"	6'-11"	2 1/2"	2"
147.0	6'-10"	6'-10"	2 1/2"	2"
148.4	6'-9"	6'-9"	2 1/2"	2"
152.6	6'-6"	6'-6"	2 1/2"	2"
153.1	6'-6"	6'-6"	2 1/2"	2"
156.8	6'-4"	6'-4"	2 1/2"	2"
157.5	6'-4"	6'-4"	2 1/2"	2"
157.8	6'-4"	6'-4"	2 1/2"	2"
160.6	6'-2"	6'-2"	2 1/2"	2"
161.7	6'-2"	6'-2"	2 1/2"	2"
164.4	6'-1"	6'-1"	2 1/2"	2"

MAXIMUM DESIGN LOAD "W" (p.s.f.)	MAXIMUM PANEL SPAN (ft.)		MINIMUM SEPARATION TO GLASS (in.)	
	*	**	*	**
165.2	6'-0"	6'-0"	2 1/2"	2"
168.1	5'-11"	5'-11"	2 1/2"	2"
168.7	5'-11"	5'-11"	2 1/2"	2"
170.0	5'-10"	5'-10"	2 1/2"	2"
175.6	5'-8"	5'-8"	2 1/2"	2"
176.6	5'-8"	5'-8"	2 1/2"	2"
180.3	5'-6"	5'-6"	2 1/2"	2"
188.0	5'-4"	5'-4"	2 1/2"	2"
195.2	5'-1"	5'-1"	2 1/2"	2"
197.2	5'-1"	5'-1"	2 1/2"	2"
199.1	5'-0"	5'-0"	2 1/2"	2"
204.7	4'-11"	4'-11"	2 1/2"	2"
211.3	4'-9"	4'-9"	2 1/2"	2"
216.9	4'-7"	4'-7"	2 1/2"	2"
221.6	4'-6"	4'-6"	2 1/2"	2"
226.3	4'-5"	4'-5"	2 1/2"	2"

MAXIMUM DESIGN PRESSURE RATING "W" (p.s.f.) AND CORRESPONDING MAXIMUM ANCHOR SPACING (in.) SCHEDULE. +

(VALID FOR SECTIONS B', B1', B2' & C1' ON SHEET 3 OF 9).

MAXIMUM DESIGN LOAD "W" (p.s.f.)	WALL MOUNTING INSTALLATION AT TOP OR BOTTOM (TO CONCRETE)			WALL MOUNTING INSTALLATION AT TOP OR BOTTOM (TO MASONRY)			FLOOR/CEILING MOUNTING INSTALLATION TOP OR BOTTOM (TO CONCRETE)		
	NOTE 1	NOTE 2	NOTE 3	NOTE 1	NOTE 2	NOTE 3	NOTE 1	NOTE 2	NOTE 3
FROM 45.1 TO 61.8	9"	9"	9"	9"	9"	4 1/2"	9"	9"	8"
	9"	9"	7"	7"	7"	5"	9"	7"	5"
FROM 61.9 TO 75.3	9"	9"	8 1/2"	9"	8"	2 1/2"	9"	9"	7"
	9"	9"	4 1/2"	9"	7"	3"	9"	5 1/2"	4 1/2"
FROM 75.4 TO 91.4	9"	9"	6"	9"	3"	–	9"	7 1/2"	6 1/2"
FROM 91.5 TO 120.0	9"	4 1/2"	4 1/2"	8"	–	–	9"	5 1/2"	5 1/2"
FROM 120.1 TO 168.1	7 1/2"	4 1/2"	–	2 1/2"	–	–	7"	5 1/2"	–
FROM 168.2 TO 226.3	4 1/2"	4 1/2"	–	2" *	–	–	5 1/2"	5 1/2"	–

* VALID FOR UP TO 3'-0" MAXIMUM SPAN.

ANCHOR SPACING LEGEND

(1) Max. ANCHOR SPCG. VALID FOR SPANS OF 5'-0" OR LESS.
(2) Max. ANCHOR SPCG. VALID FOR SPANS GREATER THAN 5'-0" TO 8'-6".
(3) Max. ANCHOR SPCG. VALID FOR SPANS GREATER THAN 8'-6" TO Max. ALLOWED.

\+ USE TAPCON ANCHORS, ZAMAC NAILIN & CALK-INS FOR INSTALLATIONS W/ DESIGN LOADS UP TO 75.3 p.s.f.
USE ONLY TAPCON ANCHORS & CALK-INS FOR INSTALLATIONS W/ DESIGN LOADS GREATER THAN 75.3 p.s.f.
MAXIMUM ANCHOR SPACINGS ARE VALID FOR 3" EDGE DISTANCE. FOR E. D. LESS THAN 3", REDUCE ANCHOR SPACING BY MULTIPLYING SPACINGS SHOWN ON SCHEDULE BY THE FOLLOWING FACTORS. (NOTE : Min. E. D. FOR CALK-IN ANCHORS IS 2 1/2").

ACTUAL E. D.= EDGE DISTANCE	FACTOR
2 1/2"	.75
2"	.50

TAPCON OR CALK-IN	TAPCON OR CALK-IN
ZAMAC NAILIN	
UP TO 75.3 p.s.f.	> 75.3 p.s.f. TO 226.3 p.s.f.

ANCHOR LEGENDS

TABLE 1:

MINIMUM SEPARATION BETWEEN GLASS AND SHUTTER FOR A GIVEN SHUTTER SPAN, FOR SHUTTERS INSTALLED WITHIN THE FIRST 30'-0" ABOVE GRADE OF A GIVEN BUILDING. 30'-0" ELEVATION SHALL BE MEASURED AT BOTTOM OF SHUTTER. SEPARATION TO BE MEASURED AS INDICATED ON SECTION D, SHEET 4 OF 9.

SHUTTER SPAN (ft.)	MINIMUM SEPARATION (in.)
LESS OR EQUAL THAN 9'-0"	2 1/2"
> 9'-0" TO 10'-0"	3 1/2"
> 10'-0" TO 12'-0"	4"

* FOR SHUTTERS INSTALLED WITHIN THE FIRST 30'-0" ELEVATION OF BUILDING. SEE TABLE 1 FOR MINIMUM SEPARATION TO GLASS FOR SPANS SHORTER THAN THE MAXIMUM ALLOWED SHOWN ON SCHEDULE.

** FOR SHUTTERS INSTALLED ABOVE 30'-0" ELEVATION OF BUILDING, MEASURED AT BOTTOM OF SHUTTER.

PRODUCT REVISED
as complying with the Florida Buiding Code
Acceptance No 02-0814.08
Expiration Date 10/17/2006
By Helmy A. Nader
Miami Dade Product Control Division

MIAMI-DADE COUNTY

9/27/02

TILTECO INC.
TILLIT TESTING & ENGINEERING COMPANY
6595 N.W. 36th. St., Ste. 217, VIRGINIA GARDENS, FLORIDA 33166
Phone : (305)871-1530 . Fax : (305)871-1531
EB-0006719
WALTER A. TILLIT Jr., P. E.
FLORIDA Lic. # 44167

ASSA / ECONOMY ACCORDION SHUTTER

COULTER HURRICANE PRODUCTS CORPORATION
(ASSA # 18)
9821 N.W. 80th AVE. BAY P-5
HIALEAH GARDENS, FLORIDA 33016

REV. NO	DESCRIPTION	DATE	REV. No	DESCRIPTION	DATE
1	–	–	3	–	–
2	–	–	4	–	–

AS SHOWN SCALE
9/24/02 DATE
02-461 DRAWING No
SHEET 9 OF 9