MIAMI-DADE

BUILDING CODE COMPLIANCE OFFICE (BCCO)
PRODUCT CONTROL DIVISION

MIAMI-DADE COUNTY, FLORIDA
METRO-DADE FLAGLER BUILDING
140 WEST FLAGLER STREET, SUITE 1603
MIAMI, FLORIDA 33130-1563
(305) 375-2901 FAX (305) 375-2908

NOTICE OF ACCEPTANCE (NOA)

All Weather Control, Inc.
4837 Pembroke Road
Hollywood, Florida 33021

SCOPE:
This NOA is being issued under the applicable rules and regulations governing the use of construction materials. The documentation submitted has been reviewed by Miami-Dade County Product Control Division and accepted by the Board of Rules and Appeals (BORA) to be used in Miami Dade County and other areas where allowed by the Authority Having Jurisdiction (AHJ).

This NOA shall not be valid after the expiration date stated below. The Miami-Dade County Product Control Division (In Miami Dade County) and/or the AHJ (in areas other than Miami Dade County) reserve the right to have this product or material tested for quality assurance purposes. If this product or material fails to perform in the accepted manner, the manufacturer will incur the expense of such testing and the AHJ may immediately revoke, modify, or suspend the use of such product or material within their jurisdiction. BORA reserves the right to revoke this acceptance, if it is determined by Miami-Dade County Product Control Division that this product or material fails to meet the requirements of the applicable building code.

This product is approved as described herein, and has been designed to comply with the High Velocity Hurricane Zone of the Florida Building Code.

DESCRIPTION: " Hurri-Fold" Aluminum Accordion Shutter

APPROVAL DOCUMENT: Drawing No. 99-231, titled " Hurri-Fold Accordion Shutter ", sheets 1 through 6 of 6, prepared by Knezevich & Associates, Inc., dated July 19, 1999, last revision #4 dated March 28, 2003 bearing the Miami-Dade County Product Control Revision stamp with the Notice of Acceptance number and expiration date by the Miami-Dade County Product Control Division.

MISSILE IMPACT RATING: Large and Small Missile Impact

LABELING: Each unit shall bear a permanent label with the manufacturer's name or logo, city, state and the following statement: "Miami-Dade County Product Control Approved", unless otherwise noted herein.

RENEWAL of this NOA shall be considered after a renewal application has been filed and there has been no change in the applicable building code negatively affecting the performance of this product.

TERMINATION of this NOA will occur after the expiration date or if there has been a revision or change in the materials, use, and/or manufacture of the product or process. Misuse of this NOA as an endorsement of any product, for sales, advertising or any other purposes shall automatically terminate this NOA. Failure to comply with any section of this NOA shall be cause for termination and removal of NOA.

ADVERTISEMENT: The NOA number preceded by the words Miami-Dade County, Florida, and followed by the expiration date may be displayed in advertising literature. If any portion of the NOA is displayed, then it shall be done in its entirety.

INSPECTION: A copy of this entire NOA shall be provided to the user by the manufacturer or its distributors and shall be available for inspection at the job site at the request of the Building Official.

This NOA **revises & renews NOA # 99-0729.04 &** consists of this page 1 & approval document mentioned above The submitted documentation was reviewed by **Helmy A. Makar, P.E.**

H.M.
05/15/03

PRODUCT CONTROL ACCEPTED

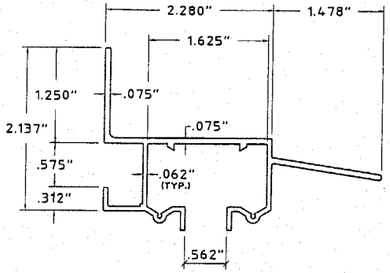

1 **HEADER-WALL MOUNTED**
SCALE: HALF SIZE

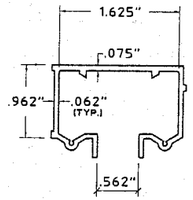

2 **HEADER-CLG. MOUNTED**
SCALE: HALF SIZE

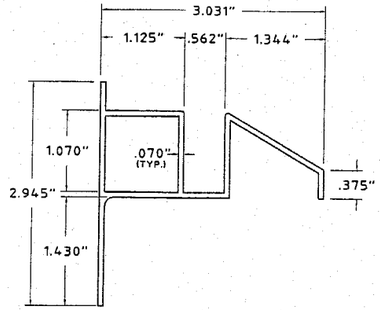

3 **SILL-WALL MOUNTED**
SCALE: HALF SIZE

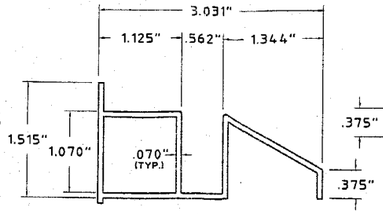

4 **SILL-FLOOR MOUNTED**
SCALE: HALF SIZE

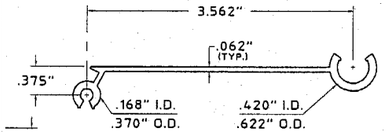

5 **TYPICAL BLADE**
SCALE: HALF SIZE
6063-T6 ALUMINUM ALLOY

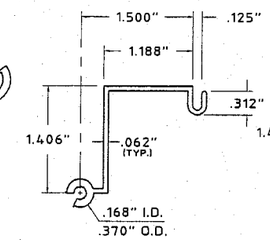

6 **MALE WALL HINGE**
SCALE: HALF SIZE

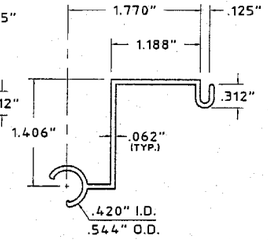

7 **FEMALE WALL HINGE**
SCALE: HALF SIZE

GENERAL NOTES:

1. THESE APPROVAL DOCUMENTS REPRESENT A SHUTTER SYSTEM ANALYZED WITH THE PROVISION SET FOR THE ISSUANCE OF A NOTICE OF ACCEPTANCE (NOA) BY MIAMI-DADE COUNTY PRODUCT CONTROL DIVISION FOR THE HIGH VELOCITY HURRICANE ZONE (HVHZ) OF THE FLORIDA BUILDING CODE.
2. AN ALLOWABLE STRESS INCREASE HAS NOT BEEN USED IN THE DESIGN OF THIS PRODUCT.
3. DETERMINE THE POSITIVE AND NEGATIVE DESIGN LOADS TO USE WHEN REFERENCING THESE DOCUMENTS IN ACCORDANCE WITH THE GOVERNING CODE AND GOVERNING WIND VELOCITY. FOR WIND LOAD CALCULATIONS IN ACCORDANCE WITH ASCE 7-98, A DIRECTIONALITY FACTOR OF Kd =.85 MAY BE USED.
4. THESE APPROVAL DOCUMENTS ARE GENERIC AND DO NOT INCLUDE INFORMATION FOR SITE-SPECIFIC APPLICATION OF THIS SHUTTER SYSTEM.
5. THESE APPROVAL DOCUMENTS COMPLY WITH CHAPTER 61G15-23 OF THE FLORIDA ADMINISTRATIVE CODE.
6. THESE APPROVAL DOCUMENTS, ARE SUITABLE TO BE APPLIED BY THE CONTRACTOR PROVIDED THE CONTRACTOR DOES NOT DEVIATE FROM THE CONDITIONS DETAILED HEREIN AND THE CONTRACTOR VERIFIES THAT THE EXISTING STRUCTURE DOES NOT DEVIATE IN EITHER FORM OR MATERIAL FROM THE STRUCTURAL SUBSTRATES DETAILED HEREIN.
7. ANY MODIFICATIONS OR ADDITIONS TO THESE APPROVAL DOCUMENTS WILL VOID THE APPROVAL DOCUMENTS.
8. WHEN THE SITE CONDITIONS DEVIATE FROM THESE APPROVAL DOCUMENTS, THE BUILDING OFFICIAL MAY ELECT ONE OF THE FOLLOWING OPTIONS:
   A) REQUIRE THAT SITE SPECIFIC DOCUMENTS BE PREPARED, SIGNED, DATED AND SEALED BY A LICENSED ENGINEER OR REGISTERED ARCHITECT, WHICH DETAIL AND JUSTIFY THE DEVIATION. SAID DOCUMENTS SHALL BE SUBMITTED TO THE PRODUCT ENGINEER FOR REVIEW AS A CONDITION TO THE BUILDING OFFICIAL GRANTING HIS/HER APPROVAL.
   B) REQUIRE THAT A ONE-TIME SITE SPECIFIC APPROVAL BE APPLIED FOR AND SECURED FROM THE MIAMI-DADE COUNTY PRODUCT CONTROL DIVISION

   WHEN THE SITE CONDITION DEVIATIONS OCCUR WITHIN THE HIGH VELOCITY HURRICANE ZONE AREAS ONLY OPTION "B" SHALL BE ACCEPTED BY THE BUILDING OFFICIAL.
9. EACH SHUTTER ASSEMBLY SHALL BE PERMANENTLY LABELED ON THE HOOD OR GUIDE RAIL AS FOLLOWS:

   ALL WEATHER CONTROL, INC.
   HOLLYWOOD, FLORIDA
   MIAMI-DADE COUNTY PRODUCT CONTROL APPROVED
10. ALL EXTRUSIONS SHALL BE 6063-T6 ALUMINUM ALLOY, U.O.N
11. ALL BOLTS AND WASHERS SHALL BE GALVANIZED OR STAINLESS STEEL WITH A MINIMUM TENSILE STRENGTH OF 60 KSI. POP RIVETS SHALL BE 3/16" DIA. 5052 ALUM. ALLOY.
12. ALL SHUTTERS SHALL HAVE A LOCKING MECHANISM 6" ABOVE AND BELOW CENTER OF LOCKING MEMBERS. LOCATION OF LOCKING MEMBERS MAY VARY.
13. TOP & BOTTOM DETAILS SHOWN MAY BE INTERCHANGED AS FIELD CONDITIONS DICTATE.
14. MINIMUM PIN ENGAGEMENT INTO TRACK SHALL BE 1/2"

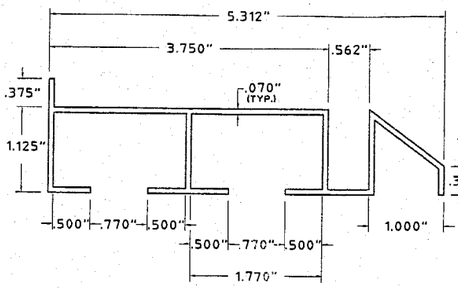

8 **"Z" SILL**
SCALE: HALF SIZE

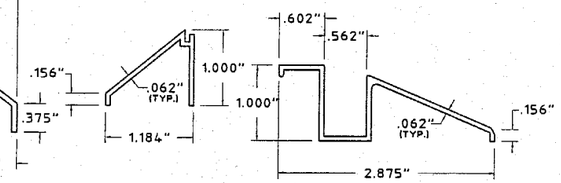

9 **OPTIONAL SILL MEMBER**
SCALE: HALF SIZE

10 **DOOR SILL**
SCALE: HALF SIZE

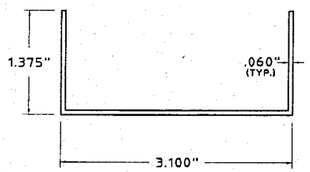

11 **ADJ. SILL-BOTTOM**
SCALE: HALF SIZE

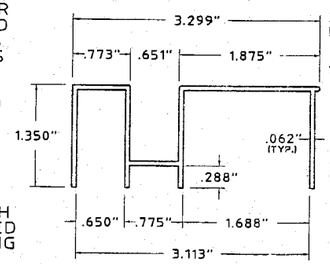

12 **ADJ. SILL-TOP**
SCALE: HALF SIZE

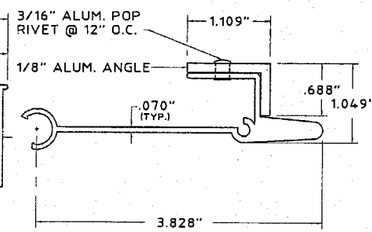

13 **MALE LOCK BAR**
SCALE: HALF SIZE
6063-T6 ALUMINUM ALLOY

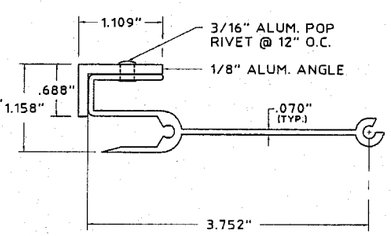

14 **FEMALE LOCK BAR**
SCALE: HALF SIZE
6063-T6 ALUMINUM ALLOY

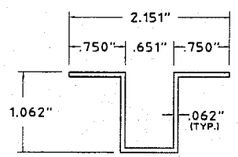

15 **RECESSED SILL**
SCALE: HALF SIZE

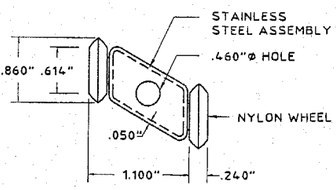

16 **ROLLER ASSEMBLY**
SCALE: HALF SIZE
TYPICAL AT EVERY OTHER INTERIOR TOP JOINT

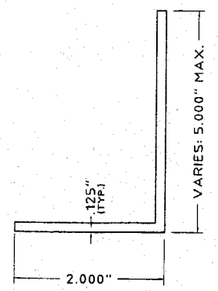

17 **ANGLE**
SCALE: HALF SIZE

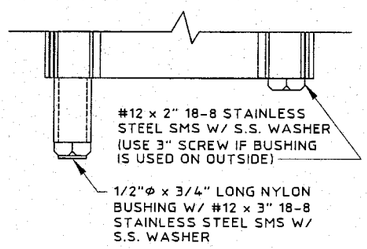

18 **BUSHING ASSEMBLY**
SCALE: HALF SIZE

PRODUCT REVISED
as complying with the Florida Building Code
Acceptance No. 02-0903.01
Expiration Date 08/29/2007
By Helmy A. Mahar
Miami Dade Product Control Division

KNEZEVICH & ASSOCIATES, INC.
CONSULTING ENGINEERS • PRODUCT TESTING
1260 N. UNIVERSITY DRIVE, SUITE 180 • FORT LAUDERDALE, FL 33322
TEL: (954) 382-2800 • FAX: (954) 382-2989 • FLORIDA COA #3205
WEBSITE: WWW.KNEZEVICH.COM • E-MAIL: KA@KNEZEVICH.COM

COPYRIGHT © 2002 KNEZEVICH & ASSOCIATES, INC

"HURRI-FOLD" ACCORDION SHUTTER

Weather Control
INCORPORATED
4837 PEMBROKE ROAD
HOLLYWOOD, FL 33021
(954) 920-2391

V.J. KNEZEVICH
PROFESSIONAL ENGINEER
FL License No: PE 0010983
MAR 28 2003

revisions

no	date	by	description
1	07/19/99	JP	PREV. DRAWING No. 94-182
2	08/05/99	JWK	COUNTY COMMENTS
3	10/24/02	DLB	ANCH. & NOTES TO FBC 2001
4	03/28/03	NZ	WOOD ANCHOR SCHEDULE

date 07/19/1999
scale AS NOTED
drawn by AV
design by JP
checked by VJK
drawing no. 99-231
sheet 1 of 6

Print Information: J:\CADD\Cadd99\AllWeather\99-231\X4-sub\99-231-01.dwg AVazquez 03/28/2003 03:03:12pm

03/28/03 15:03

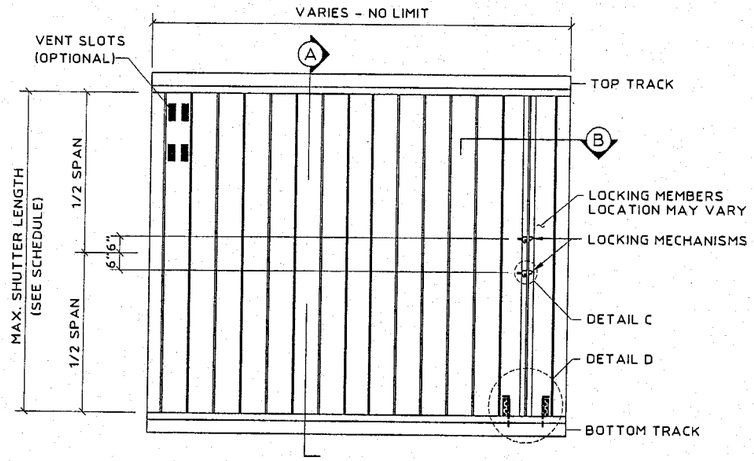

TYPICAL ELEVATION

N.T.S.

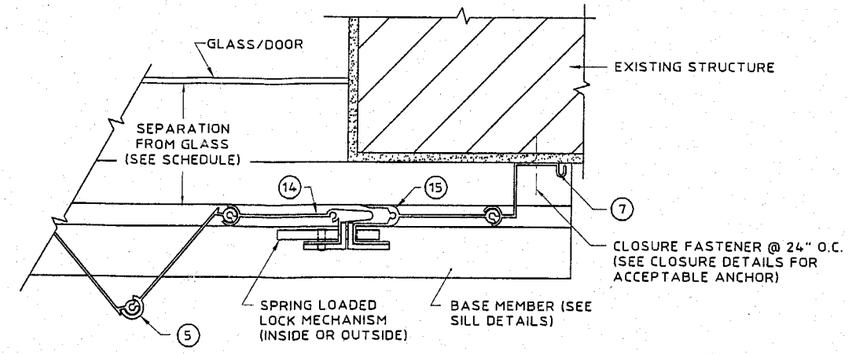

B1 TYPICAL PLAN VIEW

SCALE: 3" = 1'-0"

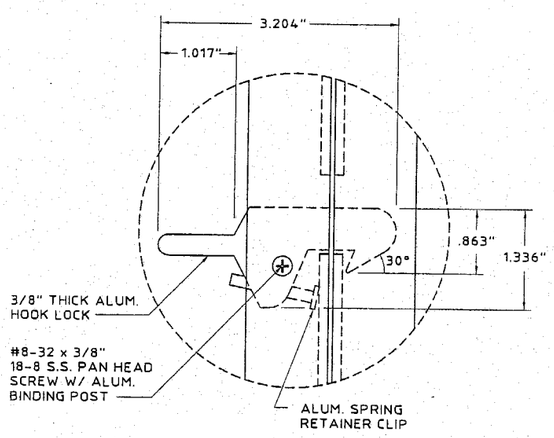

DETAIL C

SCALE: HALF SIZE

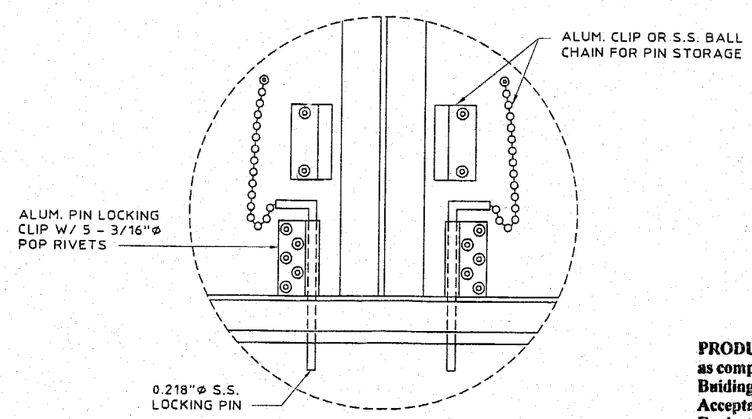

DETAIL D

SCALE: 3" = 1'-0"

PRODUCT REVISED
as complying with the Florida
Building Code
Acceptance No 02-0903.01
Expiration Date 08/29/2007
By Helmy A. Mola
Miami Dade Product Control
Division

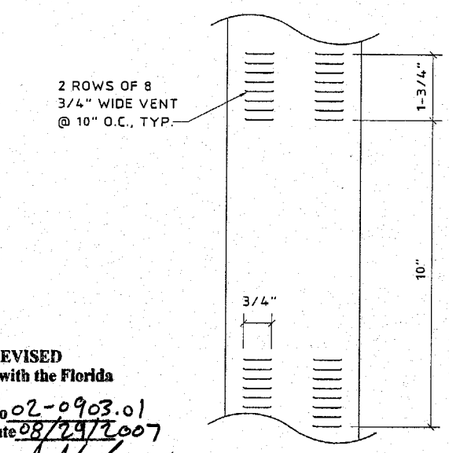

VENT SLOT DETAIL

N.T.S.

KNEZEVICH & ASSOCIATES, INC.
CONSULTING ENGINEERS • PRODUCT TESTING
1260 N. UNIVERSITY DRIVE, SUITE 180 • FORT LAUDERDALE, FL 33322
TEL: (954) 382-2800 • FAX: (954) 382-2989 • FLORIDA COA #3205
WEBSITE: WWW.KNEZEVICH.COM • E-MAIL: KA@KNEZEVICH.COM

COPYRIGHT © 2002 KNEZEVICH & ASSOCIATES, INC.

"HURRI-FOLD" ACCORDION SHUTTER

Weather Control INCORPORATED
4837 PEMBROKE ROAD
HOLLYWOOD, FL 33021
(954) 920-2391

V.J. KNEZEVICH
PROFESSIONAL ENGINEER
FL License No: PE 0010983

MAR 28 2003

revisions

no	date	by	description
1	07/19/99	JP	PREV. DRAWING No. 94-192
2	08/05/99	JWK	COUNTY COMMENTS
3	10/24/02	DLB	ANCH. & NOTES TO FBC 2001
4	03/28/03	NZ	WOOD ANCHOR SCHEDULE

date 07/19/1999
scale AS NOTED
drawn by AV
design by JP
checked by VJK
drawing no. 99-231
sheet 2 of 6

Print Information: J:\CADD\Cad699\Weather\99-231\R4-sub\99-231-02.dwg AVazquez 03/28/2003 03:03:27pm

03/28/03 15:03

MINIMUM SEPARATION FROM GLASS

× FOR INSTALLATIONS WHERE A PORTION OF THE SHUTTER IS **LESS THAN 30'-0"** ABOVE GRADE:

MIN. SEPARATION FROM GLASS SHALL BE 3-5/8"

FOR INSTALLATIONS GREATER THAN 30'-0" ABOVE GRADE, USE TABLE BELOW

POSITIVE DESIGN LOAD (PSF)	MAXIMUM ALLOWABLE SPAN (L) (FT - IN)	MINIMUM SEPARATION FROM GLASS (A) (IN)
30.0	L ≤ 5'-0"	1
	5'-0" < L ≤ 8'-0"	1-1/4
	8'-0" < L ≤ 10'-0"	1-5/8
40.0	L ≤ 5'-0"	1
	5'-0" < L ≤ 8'-0"	1-3/8
	8'-0" < L ≤ 10'-0"	1-3/4
50.0	L ≤ 5'-0"	1
	5'-0" < L ≤ 8'-0"	1-3/8
	8'-0" < L ≤ 10'-0"	2
60.0	L ≤ 5'-0"	1-1/8
	5'-0" < L ≤ 8'-0"	1-1/2
	8'-0" < L ≤ 10'-0"	2-1/8
70.0	L ≤ 5'-0"	1-1/8
	5'-0" < L ≤ 8'-0"	1-1/2
	8'-0" < L ≤ 10'-0"	2-3/8
80.0	L ≤ 5'-0"	1-1/8
	5'-0" < L ≤ 8'-0"	1-5/8
	8'-0" < L ≤ 10'-0"	2-1/2
90.0	L ≤ 5'-0"	1-1/8
	5'-0" < L ≤ 8'-0"	1-3/4
	8'-0" < L ≤ 10'-0"	2-3/4
100.0	L ≤ 5'-0"	1-1/8
	5'-0" < L ≤ 8'-0"	1-3/4
	8'-0" < L ≤ 10'-0"	3
110.0	L ≤ 5'-0"	1-1/8
	5'-0" < L ≤ 8'-0"	1-7/8
	8'-0" < L ≤ 10'-0"	NOT ALLOWED

ANCHOR SCHEDULE

FASTENER MAXIMUM SPACING (INCHES) REQUIRED FOR VARIOUS DESIGN LOADS AND SPANS

EXISTING STRUCTURE	ANCHOR TYPE	LOAD (W) PSF MAX. (SEE NOTE 1)	MIN. 2" EDGE DISTANCE															MIN. 3" EDGE DISTANCE													
			SPANS UP TO 5'-0" (SEE NOTE 1)					SPANS UP TO 8'-0" (SEE NOTE 1)					SPANS UP TO 10'-0" (SEE NOTE 1)					SPANS UP TO 5'-0" (SEE NOTE 1)					SPANS UP TO 8'-0" (SEE NOTE 1)					SPANS UP TO 10'-0" (SEE NOTE 1)				
			CONNECTION TYPE					CONNECTION TYPE					CONNECTION TYPE					CONNECTION TYPE					CONNECTION TYPE					CONNECTION TYPE				
			1	2	3	4	5	1	2	3	4	5	1	2	3	4	5	1	2	3	4	5	1	2	3	4	5	1	2	3	4	5
CONCRETE	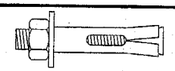 1/4"Φ POWERS RAWL LOK/BOLT SLEEVE ANCHOR W/ 1-1/8" MIN. EMBED. (MIN. 3,000 P.S.I. CONCRETE)	48.0	6.5	6.5	6.5	6.5	6.5	6.5	6.5	4	6.5	6.5	6	5	3	6.5	6.5	6.5	6.5	6.5	6.5	6.5	6.5	6.5	5	6.5	6.5	6.5	5	4	6.5	6.5
		62.0	6.5	6.5	5	6.5	6.5	6	4	3	6.5	6.5	4	3		6	6.5	6.5	6.5	6.5	6.5	6.5	6.5	5	4	6.5	6.5	4	3	3	6.5	6.5
		72.0	6.5	6.5	4	6.5	6.5	4	3	3	6.5	6.5	3			5	6.5	6.5	6.5	5	6.5	6.5	5	4	3	6.5	6.5	3	3		6.5	6.5
		105.0	5	4	3	6.5	6.5				4	6.5				4	5	6	5	3	6.5	6.5				5	6.5				5	5
		220.0				4	5				4	5				4	5				5	5				5	5				5	5
HOLLOW BLOCK	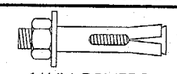 1/4"Φ POWERS RAWL LOK/BOLT SLEEVE ANCHOR W/ 1-1/8" MIN. EMBED.	48.0	6.5	6.5	6	6.5	6.5	6.5	6.5	4	6.5	6.5	5	4	3	6.5	6.5	6.5	6.5	6.5	6.5	6.5	6.5	6.5	4	6.5	6.5	6.5	5	3	6.5	6.5
		62.0	6.5	6.5	4	6.5	6.5	5	4	3	6.5	6.5	3	3		5	6.5	6.5	6.5	5	6.5	6.5	6	5	3	6.5	6.5	4	3		6.5	6.5
		72.0	6.5	6.5	4	6.5	6.5	4	3		5	6.5				4	6.5	6.5	6.5	5	6.5	6.5	4	3	3	6.5	6.5	3			5	6.5
		105.0	4	4		6	6.5				3	5				3	4	5	4	3	6.5	6.5				4	6.5				4	5
		220.0				3	4				3	4				3	4				4	5				4	5				4	5

ANCHOR SCHEDULE

FASTENER MAXIMUM SPACING (INCHES) REQUIRED FOR VARIOUS DESIGN LOADS AND SPANS

EXISTING STRUCTURE	ANCHOR TYPE	LOAD (W) PSF MAX. (SEE NOTE 1)	MIN. 3/4" EDGE DISTANCE														
			SPANS UP TO 5'-0" (SEE NOTE 1)					SPANS UP TO 8'-0" (SEE NOTE 1)					SPANS UP TO 10'-0" (SEE NOTE 1)				
			CONNECTION TYPE					CONNECTION TYPE					CONNECTION TYPE				
			1	2	3	4	5	1	2	3	4	5	1	2	3	4	5
WOOD	1/4"Φ WOOD LAG W/ 1-3/4" MIN. THREAD PENETRATION SHEAR PARALLEL OR PERPENDICULAR TO WOOD GRAIN	48.0	6.5	6.5	6.5	6.5	6.5	6.5	6.5	4	6.5	6.5	6.5	6	3	4	6.5
		62.0	6.5	6.5	5	6.5	6.5	6.5	6.5	3	5	6.5	5	4		3	6.5
		72.0	6.5	6.5	4	6.5	6.5	6.5	5		4	6.5	4	3		3	6.5
		105.0	6.5	6	3	4	6.5	3	3		3	6.5	3	3		3	6.5
		220.0	3	3		3	6.5	3	3		3	6.5	3	3		3	6.5

ANCHOR NOTES:

1. SPANS AND LOADS SHOWN HERE ARE FOR DETERMINING ANCHOR SPACING ONLY. ALLOWABLE SHUTTER SPANS FOR SPECIFIC LOADS MUST BE LIMITED TO THOSE SHOWN IN THE "MAXIMUM ALLOWABLE SPAN SCHEDULE".
2. ENTER ANCHOR SCHEDULE BASED ON THE EXISTING STRUCTURE MATERIAL, ANCHOR TYPE AND EDGE DISTANCE. SELECT DESIGN LOAD GREATER THAN OR EQUAL TO NEGATIVE DESIGN LOAD ON SHUTTER AND SELECT SPAN GREATER THAN OR EQUAL TO SHUTTER SPAN.
3. EXISTING STRUCTURE MAY BE CONCRETE, HOLLOW BLOCK OR WOOD FRAMING. REFERENCE ANCHOR SCHEDULE FOR PROPER ANCHOR TYPE BASED ON TYPE OF EXISTING STRUCTURE AND APPROPRIATE CONNECTION TYPE. SEE MOUNTING SECTION DETAILS FOR IDENTIFICATION OF CONNECTION TYPE.
4. ANCHORS SHALL BE INSTALLED IN ACCORDANCE WITH MANUFACTURERS' RECOMMENDATIONS.
5. MINIMUM EMBEDMENT AND EDGE DISTANCE EXCLUDES WALL FINISH OR STUCCO.
6. WHERE EXISTING STRUCTURE IS WOOD FRAMING, WOOD FRAMING CONDITIONS VARY. FIELD VERIFY THAT FASTENERS ARE INTO ADEQUATE WOOD FRAMING MEMBERS, NOT PLYWOOD. FASTENING TO PLYWOOD IS ACCEPTABLE ONLY FOR SIDE CLOSURE PIECES.
7. WHERE LAG SCREWS FASTEN TO NARROW FACE OF STUD FRAMING, FASTENER SHALL BE LOCATED IN CENTER OF NOMINAL 2" x 4" (MIN.) WOOD STUD. 3/4" EDGE DISTANCE IS ACCEPTABLE FOR WOOD FRAMING. WOOD STUD SHALL BE "SOUTHERN PINE" G=0.55 OR GREATER DENSITY. LAG SCREWS SHALL HAVE PHILLIPS PAN HEAD OR HEX HEAD.
8. ▨ DESIGNATES ANCHOR CONDITIONS WHICH ARE NOT ACCEPTABLE USES.

MAXIMUM ALLOWABLE SPAN SCHEDULE

NEGATIVE DESIGN LOAD (PSF)	MAXIMUM ALLOWABLE SPAN (L) (FT - IN)
40.0	10' - 0"
50.0	10' - 0"
60.0	10' - 0"
70.0	10' - 0"
80.0	10' - 0"
90.0	10' - 0"
100.0	9' - 0"
110.0	8' - 3"
120.0	7' - 6"
130.0	6' - 11"
140.0	6' - 5"
150.0	6' - 0"
160.0	5' - 8"
170.0	5' - 4"
180.0	5' - 0"
190.0	4' - 9"
200.0	4' - 6"
210.0	4' - 3"
220.0	4' - 1"

PRODUCT REVISED
as complying with the Florida Buiding Code
Acceptance No 02-0903.01
Expiration Date 08/29/2007
By Helena A. Molina
Miami Dade Product Control Division

KNEZEVICH & ASSOCIATES, INC.
CONSULTING ENGINEERS • PRODUCT TESTING
1260 N. UNIVERSITY DRIVE, SUITE 180 • FORT LAUDERDALE, FL 33322
TEL: (954) 382-2800 • FAX: (954) 382-2989 • FLORIDA COA #3205
WEBSITE: WWW.KNEZEVICH.COM • E-MAIL: KA@KNEZEVICH.COM

COPYRIGHT © 2002 KNEZEVICH & ASSOCIATES, INC.

"HURRI-FOLD" ACCORDION SHUTTER

Weather Control INCORPORATED
4837 PEMBROKE ROAD
HOLLYWOOD, FL 33021
(954) 920-2391

V.J. KNEZEVICH
PROFESSIONAL ENGINEER
FL License No: PE 0010983

MAR 28 2003

revisions

no	date	by	description
1	07/19/99	JP	PREV. DRAWING No. 94-192
2	08/05/99	JWK	COUNTY COMMENTS
3	10/24/02	DLB	ANCH. & NOTES TO FBC 2001
4	03/28/03	NZ	WOOD ANCHOR SCHEDULE

date 07/19/1999
scale AS NOTED | drawn by AV
design by JP | checked by VJK
drawing no. 99-231
sheet 3 of 6

Print Information: A:\CADD\Coded99\AllWeather\99-231\R4-sub\99-231-03.dwg AVazquez 03/28/2003 03:15:17pm
03/28/03 15:15

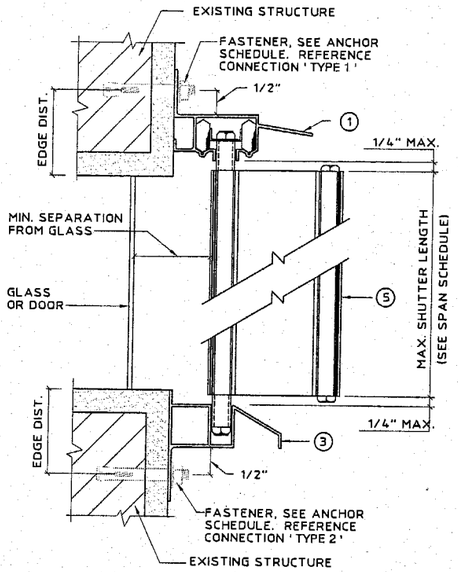

A1 WALL MOUNT SECTION

SCALE : 3"= 1'- 0"

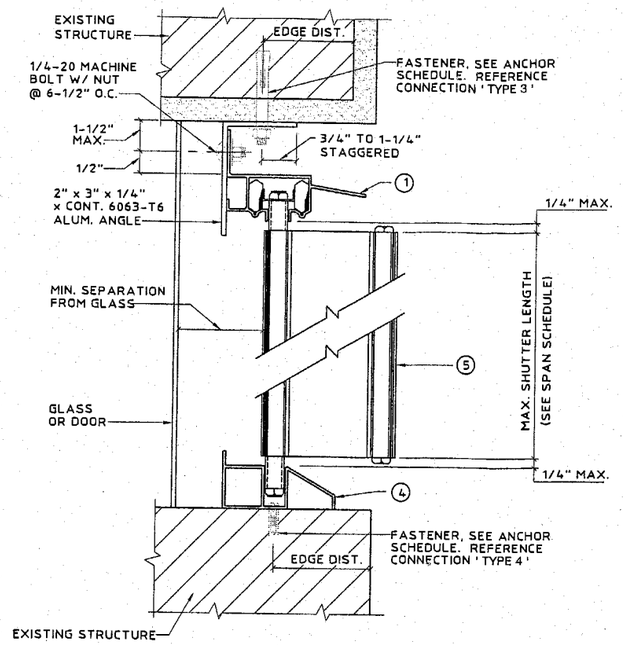

A2 CEILING/INSIDE MOUNT SECTION

SCALE : 3"= 1'- 0"

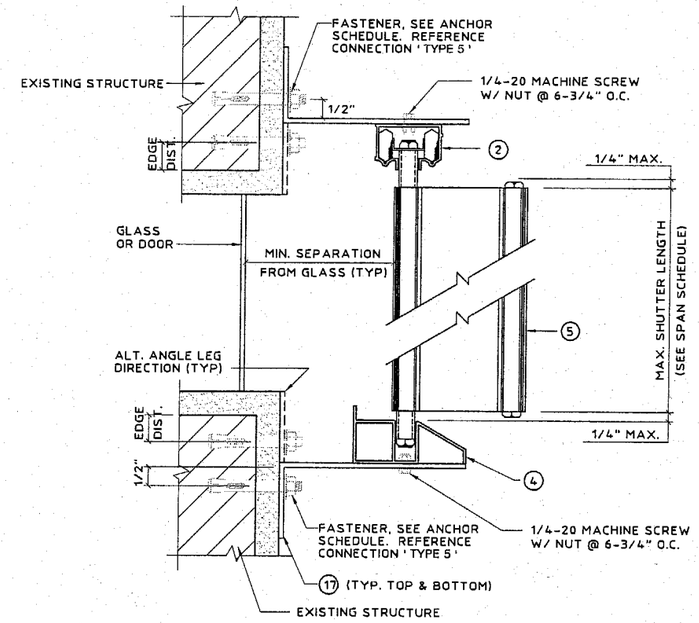

A3 BUILD-OUT MOUNT SECTION

SCALE : 3"= 1'- 0"

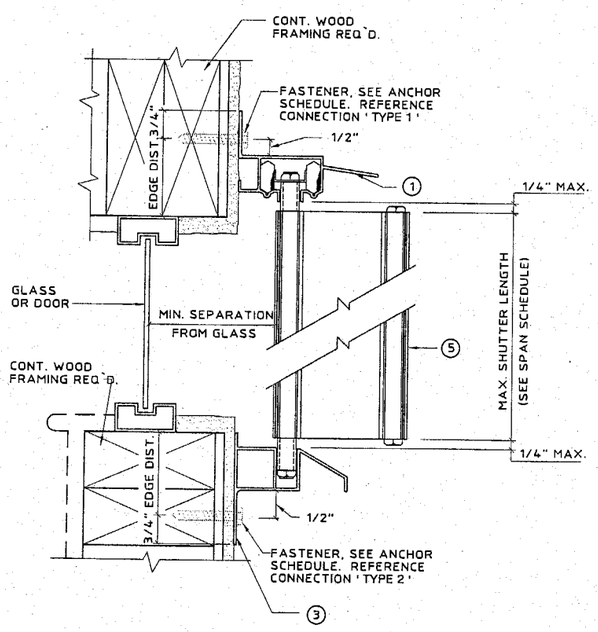

A4 WALL MOUNT SECTION

SCALE : 3"= 1'- 0"

INSTALLATION NOTES:

1. "NOTCHING" OF ATTACHING FLANGES, BOX BEAM BUILD OUT OR ANGLE BUILD OUT (MAXIMUM OF 3") IS PERMISSIBLE WHERE CONDUIT OR WALL OBSTRUCTIONS EXIST.
2. HEAD & BASE MEMBERS MAY BE CURVED BY "WEDGE NOTCHING" OF MEMBERS, PROVIDED EACH SEGMENT OF MEMBER IS ANCHORED WITH A MINIMUM OF TWO (2) ANCHORS EACH AND MAXIMUM ANCHOR SPACING IS NOT EXCEEDED.
3. THE ORIENTATION OF ANGLE BUILD OUT "LEGS" MAY NOT NECESSARILY BE AS SHOWN IN THE "CLOSURE CONNECTION DETAILS" OR ON ALT. SECTION DETAILS. EX: ANCHORED LEG OF ANGLE BUILD OUT MAY FACE EITHER LEFT OR RIGHT, UP OR DOWN.

PRODUCT REVISED
as complying with the Florida Buiding Code
Acceptance No 02-0903.01
Expiration Date 08/29/2007
By Helmy A. Moler
Miami Dade Product Control Division

KNEZEVICH & ASSOCIATES, INC.
CONSULTING ENGINEERS • PRODUCT TESTING
1260 N. UNIVERSITY DRIVE, SUITE 180 • FORT LAUDERDALE, FL 33322
TEL: (954) 382-2800 • FAX: (954) 382-2989 • FLORIDA COA #3205
WEBSITE: WWW.KNEZEVICH.COM • E-MAIL: KA@KNEZEVICH.COM

COPYRIGHT © 2002 KNEZEVICH & ASSOCIATES, INC

"HURRI-FOLD" ACCORDION SHUTTER

Weather Control INCORPORATED
4837 PEMBROKE ROAD
HOLLYWOOD, FL 33021
(954) 920-2391

V.J. KNEZEVICH
PROFESSIONAL ENGINEER
FL License No: PE 0010983

MAR 28 2003

revisions

no	date	by	description
1	07/19/99	JP	PREV. DRAWING No. 94-192
2	08/05/99	JWK	COUNTY COMMENTS
3	10/24/02	DLB	ANCH. & NOTES TO FBC 2001
4	03/28/03	NZ	WOOD ANCHOR SCHEDULE

date 07/19/1999
scale AS NOTED
drawn by AV
design by JP
checked by VJK
drawing no. 99-231
sheet 4 of 6

Print Information: J:\CADD\Cad99\AllWeather\99-231\R4-sub\99-231-04.dwg AVazquez 03/28/2003 03:15:33pm

03/28/03 15:15

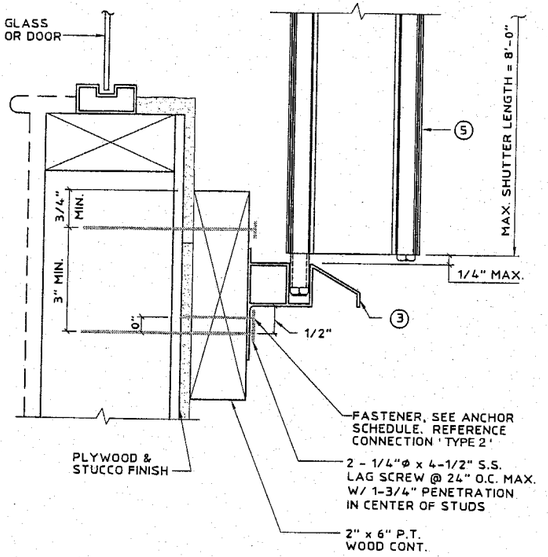

NOTE: THIS DETAIL MAY BE USED AT TOP OR BOTTOM OF PANEL.

MAX. DESIGN LOAD_< 72 PSF

A6 WALL MOUNT SECTION

SCALE : 3"= 1'- 0"

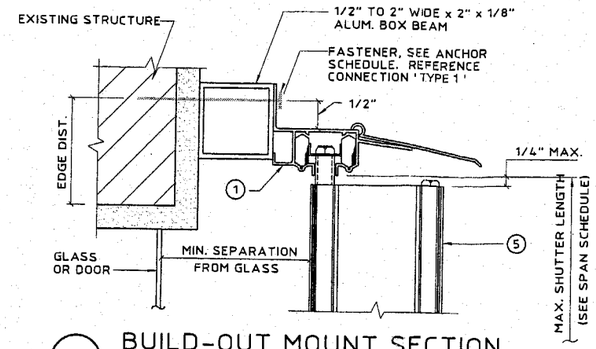

A8 BUILD-OUT MOUNT SECTION

SCALE : 3"= 1'- 0"

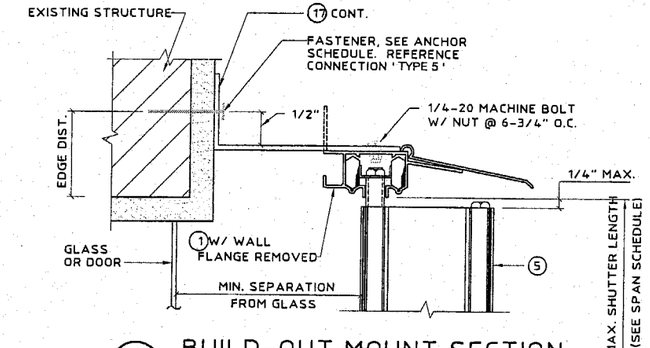

A9 BUILD-OUT MOUNT SECTION

SCALE : 3"= 1'- 0"

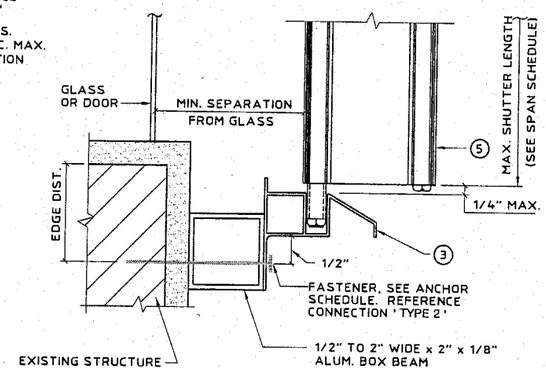

A10 BUILD-OUT MOUNT SECTION

SCALE : 3"= 1'- 0"

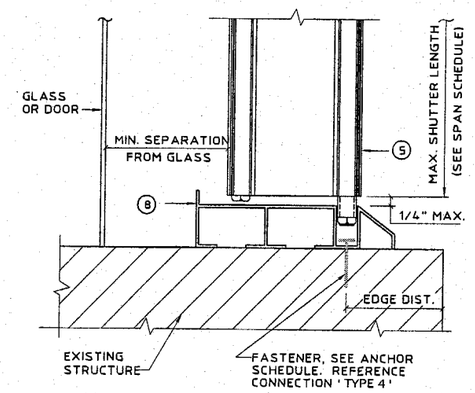

A11 FLOOR MOUNT SECTION

SCALE : 3"= 1'- 0"

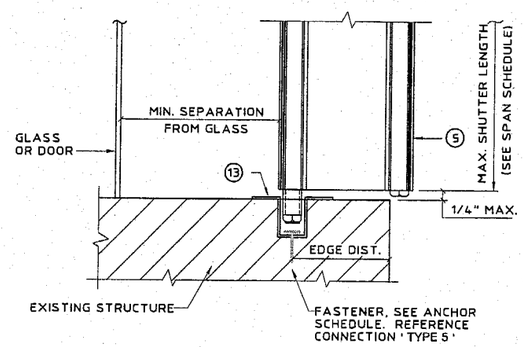

A12 FLOOR MOUNT SECTION

SCALE : 3"= 1'- 0"

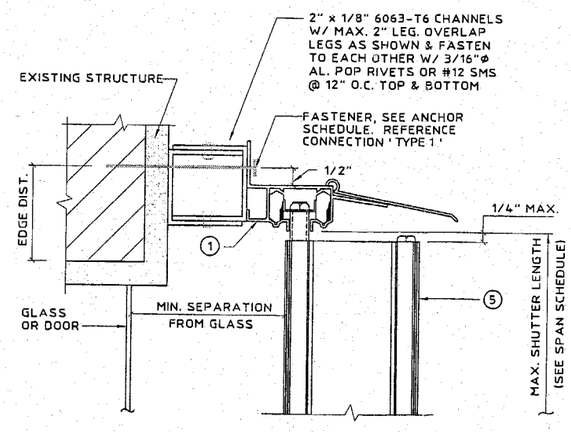

A13 BUILD-OUT MOUNT SECTION

SCALE : 3"= 1'- 0"

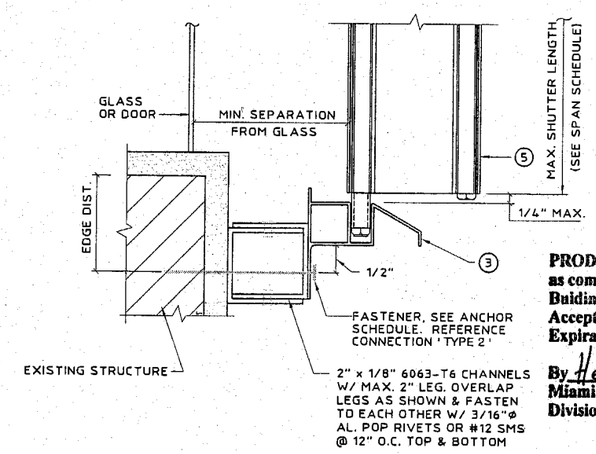

A14 BUILD-OUT MOUNT SECTION

SCALE : 3"= 1'- 0"

A7 NOT USED

PRODUCT REVISED
as complying with the Florida Building Code
Acceptance No 02-0903.01
Expiration Date 08/29/2007
By Helmy H. Mahfouz
Miami Dade Product Control Division

KNEZEVICH & ASSOCIATES, INC.
CONSULTING ENGINEERS • PRODUCT TESTING
1260 N. UNIVERSITY DRIVE, SUITE 180 • FORT LAUDERDALE, FL 33322
TEL: (954) 382-2800 • FAX: (954) 382-2989 • FLORIDA COA #3205
WEBSITE: WWW.KNEZEVICH.COM • E-MAIL: KA@KNEZEVICH.COM

COPYRIGHT © 2002 KNEZEVICH & ASSOCIATES, INC

"HURRI-FOLD" ACCORDION SHUTTER

Weather Control INCORPORATED
4837 PEMBROKE ROAD
HOLLYWOOD, FL 33021
(954) 920-2391

V.J. KNEZEVICH
PROFESSIONAL ENGINEER
FL License No: PE 0010983

MAR 28 2003

revisions

no	date	by	description
1	07/19/99	JP	PREV. DRAWING No. 94-192
2	08/05/99	JWK	COUNTY COMMENTS
3	10/24/02	DLB	ANCH. & NOTES TO FBC 2001
4	03/28/03	NZ	WOOD ANCHOR SCHEDULE

date 07/19/1999
scale AS NOTED
drawn by AV
design by JP
checked by VJK
drawing no. 99-231
sheet 5 of 6

Print information: J:\CADD\Cadd99\AllWeather\99-231\R4-asb\99-231-05.dwg AVazquez 03/28/2003 03:15:48pm

03/28/03 15:15

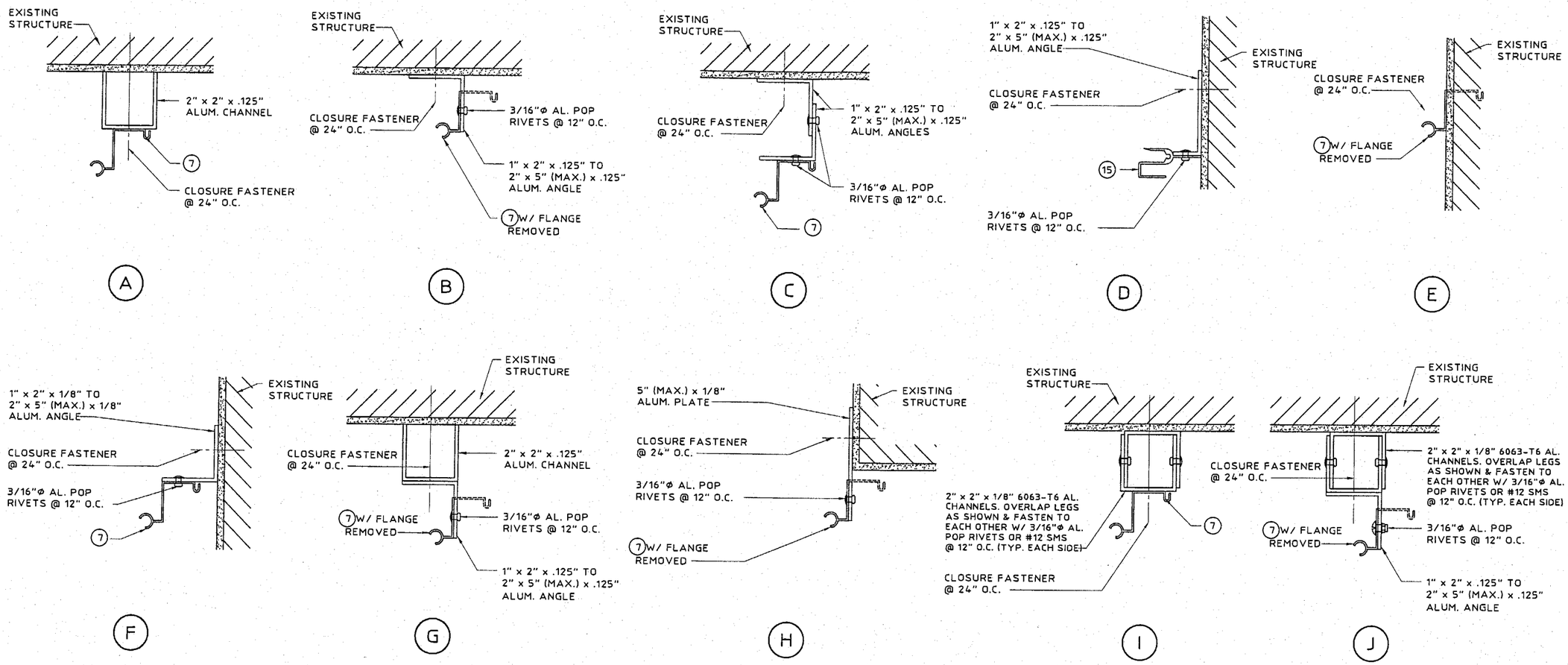

CLOSURE DETAILS (PLAN VIEW)

SCALE: 3" = 1'-0"

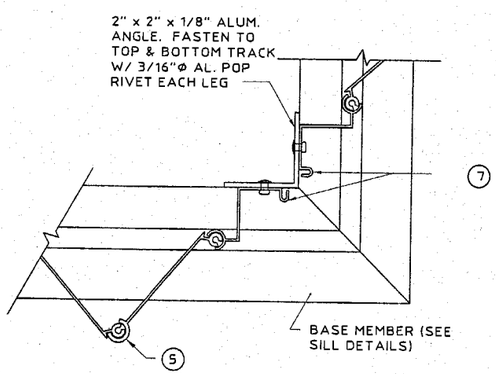

K CORNER DETAIL (PLAN)

SCALE: 3" = 1'-0"

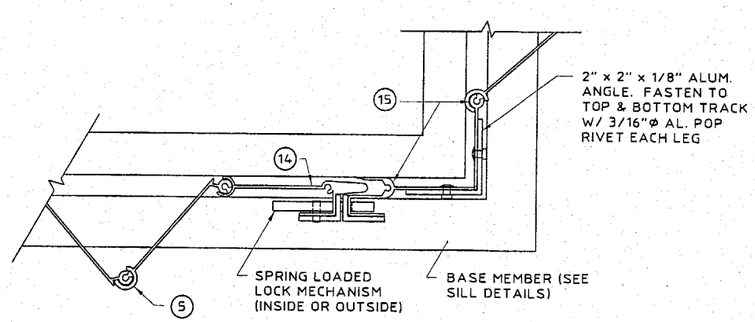

L CORNER DETAIL (PLAN)

SCALE: 3" = 1'-0"

PRODUCT REVISED
as complying with the Florida Building Code
Acceptance No 02-0903.01
Expiration Date 08/29/2007
By Helmy A. Mahar
Miami Dade Product Control Division

SIDE CLOSURE FASTENER NOTES:

1. CLOSURE FASTENERS TO STRUCTURE SHALL BE ONE OF THE FOLLOWING:
   A. 1/4"Ø RAWL LOK/BOLT SLEEVE ANCHOR W/ 1-1/4" MIN. EMBEDMENT IN CONCRETE OR BLOCK.
   B. 1/4"Ø U.S. DRIVE PIN ANCHOR W/ 1-1/4" MIN. EMBEDMENT IN CONCRETE.
   C. 1/4"Ø ITW TAPCON W/ 1-1/4" MIN. EMBEDMENT IN CONCRETE OR BLOCK.
   D. 1/4"Ø S.S. LAG SCREW W/ 1-1/2" MIN. EMBEDMENT IN WOOD FRAMING.
2. #14 S.S. TEK SCREWS OR 1/4-20 MACHINE BOLT & NUT MAY BE SUBSTITUTED FOR 3/16"Ø ALUM. POP RIVETS AT SIDE CLOSURES.

KNEZEVICH & ASSOCIATES, INC.
CONSULTING ENGINEERS • PRODUCT TESTING
1260 N. UNIVERSITY DRIVE, SUITE 180 • FORT LAUDERDALE, FL 33322
TEL: (954) 382-2800 • FAX: (954) 382-2989 • FLORIDA COA #3205
WEBSITE: WWW.KNEZEVICH.COM • E-MAIL: KA@KNEZEVICH.COM

COPYRIGHT © 2002 KNEZEVICH & ASSOCIATES, INC

"HURRI-FOLD" ACCORDION SHUTTER

Weather Control
INCORPORATED
4837 PEMBROKE ROAD
HOLLYWOOD, FL 33021
(954) 920-2391

V.J. KNEZEVICH
PROFESSIONAL ENGINEER
FL License No: PE0010983

MAR 2 8 2003

revisions

no	date	by	description
1	07/19/99	JP	PREV. DRAWING No. 94-192
2	08/05/99	JWK	COUNTY COMMENTS
3	10/24/02	DLB	ANCH. & NOTES TO FBC 2001
4	03/28/03	NZ	WOOD ANCHOR SCHEDULE

date 07/19/1999
scale AS NOTED
drawn by AV
design by JP
checked by VJK
drawing no. 99-231
sheet 6 of 6

Print Information: J:\CADD\Cadd99\Weather\99-231\94-ab\99-231-06.dwg AVazquez 03/28/2003 03:16:04pm

03/28/03 15:15