MIAMI-DADE

BUILDING CODE COMPLIANCE OFFICE (BCCO)
PRODUCT CONTROL DIVISION

MIAMI-DADE COUNTY, FLORIDA
METRO-DADE FLAGLER BUILDING
140 WEST FLAGLER STREET, SUITE 1603
MIAMI, FLORIDA 33130-1563
(305) 375-2901 FAX (305) 375-2908

NOTICE OF ACCEPTANCE (NOA)

Hanson Roof Tile d.b.a. Pioneer Concrete Tile
1340 SW 34th Ave
Deerfield Beach, FL 33442

SCOPE:

This NOA is being issued under the applicable rules and regulations governing the use of construction materials. The documentation submitted has been reviewed by Miami-Dade County Product Control Division and accepted by the Board of Rules and Appeals (BORA) to be used in Miami Dade County and other areas where allowed by the Authority Having Jurisdiction (AHJ).

This NOA shall not be valid after the expiration date stated below. The Miami-Dade County Product Control Division (In Miami Dade County) and/or the AHJ (in areas other than Miami Dade County) reserve the right to have this product or material tested for quality assurance purposes. If this product or material fails to perform in the accepted manner, the manufacturer will incur the expense of such testing and the AHJ may immediately revoke, modify, or suspend the use of such product or material within their jurisdiction. BORA reserves the right to revoke this acceptance, if it is determined by Miami-Dade County Product Control Division that this product or material fails to meet the requirements of the applicable building code.

This product is approved as described herein, and has been designed to comply with the High Velocity Hurricane Zone of the Florida Building Code.

DESCRIPTION: Regal/Spanish "S" II Roof Tile

LABELING: Each unit shall bear a permanent label with the manufacturer's name or logo, city, state and following statement: "Miami-Dade County Product Control Approved", unless otherwise noted herein.

RENEWAL of this NOA shall be considered after a renewal application has been filed and there has been no change in the applicable building code negatively affecting the performance of this product.

TERMINATION of this NOA will occur after the expiration date or if there has been a revision or change in the materials, use, and/or manufacture of the product or process. Misuse of this NOA as an endorsement of any product, for sales, advertising or any other purposes shall automatically terminate this NOA. Failure to comply with any section of this NOA shall be cause for termination and removal of NOA.

ADVERTISEMENT: The NOA number preceded by the words Miami-Dade County, Florida, and followed by the expiration date may be displayed in advertising literature. If any portion of the NOA is displayed, then it shall be done in its entirety.

INSPECTION: A copy of this entire NOA shall be provided to the user by the manufacturer or its distributors and shall be available for inspection at the job site at the request of the Building Official.

This NOA consists of pages 1 through 6.
The submitted documentation was reviewed by Frank Zuloaga, RRC

ROOFING ASSEMBLY APPROVAL

Category: Roofing
Sub Category: Roofing Tiles
Material: Concrete

1. SCOPE

This renews a roofing system using **Hanson Regal/Spanish 'S' II Concrete Roof Tile**, as manufactured by Hanson Roof Tile d.b.a.Pioneer Concrete Tile described in Section 2 of this Notice of Acceptance. For the locations where the pressure requirements, as determined by applicable building code do not exceed the values listed in section 4 herein. The attachment calculations shall be done as a moment based system.

2. PRODUCT DESCRIPTION

Manufactured by Applicant	Dimensions	Test Specifications	Product Description
Hanson Regal / Spanish "S" II Tile	Length: 17 ¼" Width: 13 ¼" ½" thick	TAS 112	High profile concrete roof tile for direct deck or battened nail-on, mortar or adhesive set applications.
Trim Pieces	Length: varies Width: varies	TAS 112	Accessory trim, concrete roof pieces for use at hips, rakes, ridges and valley terminations.

2.1 COMPONENTS OR PRODUCTS MANUFACTURED BY OTHERS

Product	Dimensions	Test Specifications	Product Description	Manufacturer
Tile Nails	Min. 10dx 3"	TAS 114 Appendix E	Corrosion resistant screw or smooth shank nails	Generic (With current NOA)
Tile Screws	#8x 2 ½" long 0.335" head dia. 0.131" shank dia. 0.175" screw thread dia.	TAS 114 Appendix E	Corrosion resistant, coated, square drive, galvanized, coarse thread wood screws	Generic (With current NOA)
Roof Tile Mortar ("TileTite™")	N/A	TAS 123	Prepared mortar mix designed for mortar set roof tile applications.	Bermuda Roof Company, Inc. (with (With current NOA)
Roof Tile Mortar ("Quikrete® Roof Tile Mortar #1140")	N/A	TAS 123	Prepared mortar mix designed for mortar set roof tile applications.	Quikrete Construction Products (With current NOA)
Roof Tile Mortar ("BONSAL® Roof Tile Mortar Mix")	N/A	TAS 123	Prepared mortar mix designed for mortar set roof tile applications.	W. R. Bonsal Co. (With current NOA)

Roof Tile Adhesive ("Polypro® AH160")	N/A	See NOA	Two-component polyurethane adhesive designed for adhesive set roof tile applications.	Polyfoam Products, Inc. (With current NOA)
Roof Tile Adhesive TileBond	Factory premixed canisters	See NOA	Single component polyurethane foam roof tile adhesive	Flexible Products (With current NOA)
Hurricane Clip & Fasteners	Clips Min. ½" width Min. 0.060" thick Clip Fasteners Min. 8d x 1 ¼"	TAS 114 Appendix E	Corrosion resistant clips with corrosion resistant nails.	Generic (With current NOA)

2. LIMITATIONS

3.1 Fire classification is not part of this acceptance.

3.2 For mortar or adhesive set tile applications, a static field uplift test in accordance with RAS 106 may be required, refer to applicable building code.

3.3 Applicant shall retain the services of a Miami-Dade County Certified Laboratory to perform quarterly test in accordance with TAS 112, appendix 'A'. Such testing shall be submitted to the Building Code Compliance Office for review.

3.4 Minimum underlayment shall be in compliance with the applicable Roofing Applications Standards listed section 4.1 herein.

3.5 30/90 hot mopped underlayment applications may be installed perpendicular to the roof slope unless stated otherwise by the underlayment material manufacturers published literature.

3.6 This acceptance is for wood deck applications. Minimum deck requirements shall be in compliance with applicable building code.

4. INSTALLATION

4.1 Hanson Regal/Spanish 'S' II Concrete Roof Tile and its components shall be installed in strict compliance with Roofing Application Standard RAS 118, RAS 119, and RAS 120.

4.2 Data For Attachment Calculations

Table 1: Aerodynamic Multipliers - λ (ft^3)		
Tile Profile	**λ (ft^3) Batten Application**	**λ (ft^3) Direct Deck Application**
Pioneer Regal/Spanish 'S' II	0.287	0.311

Table 2: Restoring Moments due to Gravity - M_g (ft-lbf)										
Tile Profile	**3": 12"**		**4": 12"**		**5": 12"**		**6": 12"**		**7": 12" or greater**	
Pioneer Regal/Spanish 'S' II	Battens	Direct Deck	Battens	Direct Deck	Battens	Direct Deck	Battens	Direct Deck	Battens	Direct Deck
	7.77	8.34	7.65	8.20	7.49	8.03	7.30	7.83	7.10	7.61

Table 3: Attachment Resistance Expressed as a Moment - M_f (ft-lbf) For Nail-On Systems				
Tile Profile	**Fastener Type**	**Direct Deck (min 15/32" plywood)**	**Direct Deck (min. 19/32" plywood)**	**Battens**
Hanson Regal/Spanish 'S' II	2-10d Ring Shank Nails	28.6	41.2	19.4
	1-10d Smooth or Screw Shank Nail	5.1	6.8	2.8
	2-10d Smooth or Screw Shank Nails	6.9	9.2	7.3
	1 .#8 Screw	20.7	20.7	18.1
	2 .#8 Screws	43.2	43.2	29.8
	1-10d Smooth or Screw Shank Nail (Field Clip)	23.1	23.1	19.0
	1-10d Smooth or Screw Shank Nail (Eave Clip)	29.3	29.3	24.0
	2-10d Smooth or Screw Shank Nails (Field Clip)	27.6	27.6	38.6
	2-10d Smooth or Screw Shank Nails (Eave Clip)	38.1	38.1	41.8
	2-10d Ring Shank Nails[1]	33.1	48.1	45.2

1 Installation with a 4" tile headlap and fasterners are located a min. of 2½" from head of tile.

Table 4: Attachment Resistance Expressed as a Moment M_f (ft-lbf) For Two Patty Adhesive Set Systems		
Tile Profile	**Tile Application**	**Minimum Attachment Resistance**
Hanson Regal/Spanish 'S' II	Adhesive	29.3[3]

2 See manufactures component approval for installation requirements.

3 Flexible Products Company TileBond Average weight per patty 10.7 grams.
Polyfoam Product, Inc. Average weight per patty 8 grams.

Table 4A: Attachment Resistance Expressed as a Moment - M_f (ft-lbf) For Single Patty Adhesive Set Systems		
Tile Profile	**Tile Application**	**Minimum Attachment Resistance**
Hanson Regal/Spanish 'S' II	Polyfoam PolyPro™	66.5[4]
	Polyfoam PolyPro™	38.7[5]
4 Large paddy placement of 63grams of PolyPro™.		
5 Medium paddy placement of 24grams of PolyPro™.		

Table 4B: Attachment Resistance Expressed as a Moment - M_f (ft-lbf) For Mortar Set Systems		
Tile Profile	**Tile Application**	**Attachment Resistance**
Hason Regal/Spanish 'S' II	Mortar Set	24.5

5. LABELING

All tiles shall bear the imprint or identifiable marking of the manufacturer's name or logo, or following statement: "Miami-Dade County Product Control Approved".

6. BUILDING PERMIT REQUIREMENTS

6.1 Application for building permit shall be accompanied by copies of the following:

6.1.1 This Notice of Acceptance.

6.1.2 Any other documents required by the Building Official or applicable building code in order to properly evaluate the installation of this system.

PROFILE DRAWINGS

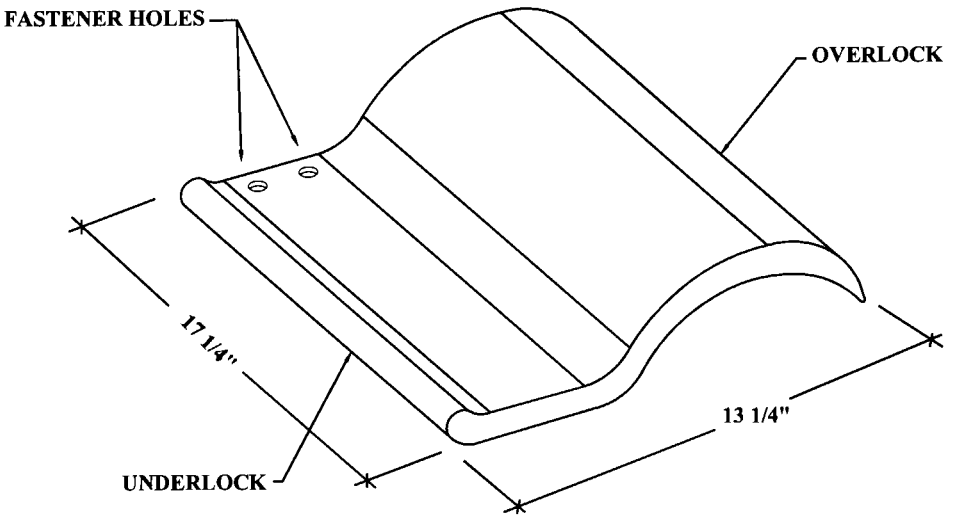

REGAL AKA SPANISH "S" II

HANSON REGAL/SPANISH 'S' II CONCRETE ROOF TILE

END OF THIS ACCEPTANCE