MIAMI-DADE

BUILDING CODE COMPLIANCE OFFICE (BCCO)
PRODUCT CONTROL DIVISION

MIAMI-DADE COUNTY, FLORIDA
METRO-DADE FLAGLER BUILDING
140 WEST FLAGLER STREET, SUITE 1603
MIAMI, FLORIDA 33130-1563
(305) 375-2901 FAX (305) 375-2908

NOTICE OF ACCEPTANCE (NOA)

Simpson Strong-Tie Co., Inc.
4120 Dublin Blvd., Suite 400
Dublin, CA 94568

SCOPE: This NOA is being issued under the applicable rules and regulations governing the use of construction materials. The documentation submitted has been reviewed by Miami-Dade County Product Control Division and accepted by the Board of Rules and Appeals (BORA) to be used in Miami Dade County and other areas where allowed by the Authority Having Jurisdiction (AHJ).

This NOA shall not be valid after the expiration date stated below. The Miami-Dade County Product Control Division (In Miami Dade County) and/or the AHJ (in areas other than Miami Dade County) reserve the right to have this product or material tested for quality assurance purposes. If this product or material fails to perform in the accepted manner, the manufacturer will incur the expense of such testing and the AHJ may immediately revoke, modify, or suspend the use of such product or material within their jurisdiction. BORA reserves the right to revoke this acceptance, if it is determined by Miami-Dade County Product Control Division that this product or material fails to meet the requirements of the applicable building code.

This product is approved as described herein, and has been designed to comply with the High Velocity Hurricane Zone of the Florida Building Code.

DESCRIPTION: Wood Connectors

APPROVAL DOCUMENT: Drawing No. no number, titled "ABA Standoff Post Bases", " ABE Standoff Post Bases", "AC/ACE Post Caps", "BC Post Caps", "L/LS Reinforcing & Skewable Angles", "MTS Twist Straps" & "TA9 Staircase Angles", sheets 1 through 7 of 7, prepared, signed and sealed by Evon Ballash, P.E., dated 3/4/99, bearing the Miami-Dade County Product Control Renewal stamp with the Notice of Acceptance number and expiration date by the Miami-Dade County Product Control Division.

MISSILE IMPACT RATING: None

LABELING: Each unit shall bear a permanent label with the manufacturer's name or logo, city, state and following statement: "Miami-Dade County Product Control Approved", unless otherwise noted herein.

RENEWAL of this NOA shall be considered after a renewal application has been filed and there has been no change in the applicable building code negatively affecting the performance of this product.

TERMINATION of this NOA will occur after the expiration date or if there has been a revision or change in the materials, use, and/or manufacture of the product or process. Misuse of this NOA as an endorsement of any product, for sales, advertising or any other purposes shall automatically terminate this NOA. Failure to comply with any section of this NOA shall be cause for termination and removal of NOA.

ADVERTISEMENT: The NOA number preceded by the words Miami-Dade County, Florida, and followed by the expiration date may be displayed in advertising literature. If any portion of the NOA is displayed, then it shall be done in its entirety.

INSPECTION: A copy of this entire NOA shall be provided to the user by the manufacturer or its distributors and shall be available for inspection at the job site at the request of the Building Official.
This NOA **renews NOA # 99-0713.05** and, consists of this page 1 as well as approval document mentioned above.
The submitted documentation was reviewed by **Candido F. Font PE.**

PRODUCT CONTROL ACCEPTED

Simpson Strong-Tie Co., Inc.

NOTICE OF ACCEPTANCE: EVIDENCE SUBMITTED

(For File ONLY. Not part of NOA)

A. DRAWINGS

1. Drawings prepared by Simpson Strong Tie Co. Inc. titled: "ABA Standoff Post Bases", "ABE Standoff Post Bases", "AC/ACE Post Caps", "BC Post Caps", "L/LS Reinforcing and Skewable Angle", MTS Twist Straps" and TA9 Staircase Angles" without number, dated 03/04/99 sheets 1 through 7 of 7, signed and sealed by E.M.C. Ballash, PE.

C. CALCULATIONS

Test reports on wood connectors per ASTM D1761 by Kleinfelder, signed and sealed by P. Baginski, PE.

	Report No.	Wood Connector	Direction	Date
1.	HO21 & HO22	ABA 66	Uplift & Download	02/26/99
2.	HO19 & HO20	ABA 44	Uplift & Download	02/26/99
3.	H115 & H147	ABA 46	Uplift & Download	04/21/99
4.	G867 & F176	ABE 44	Uplift & Download	01/05/99 & 10/15/96
5.	F179	ABE 44R	Uplift	10/15/96
6.	H159	ABE 66	Download	04/21/99
7.	G 868 & F177	ABE 46	Uplift & Download	01/05/99 & 10/15/96
8.	F180	ABE 46R	Uplift	10/15/96
9.	F181	ABE 66R	Uplift	10/15/96
10.	HO86, 87 & 88	ACA 4	Uplift & Lateral	02/26/99
11.	HO 89, 90 & 91	ACA 6	Uplift & Lateral	02/26/99 & 03/08/99
12.	HO92, 93, 94 & 95	ACE 4	Uplift & Lateral	02/26/99
13	HO96 & 97	BC 4	Uplif & Lateral	02/26/99
14	HO 98	BC 40	Lateral	02/26/99
15	HO99 & H100	L 70	Lateral	02/26/99
16	H101, 02, 03 & 04	LS50	Lateral	03/08/99
17	G769, 71 & H113	LTS12	Lateral & Uplift	07/22/98 & 03/25/99
18	G770, 72 & H114	MTS12	Lateral & Uplift	07/22/98 & 03/25/99
19	H105	TA 9	Lateral	03/25/99

D. MATERIAL CERTIFICATIONS

Report of Design Capacities prepared by Simpson Strong-Tie Co. Inc.

	Product Model	No. of Pages	Date	Signature
1.	ABA 44, 46 & 66	1 & 2	06/03/93	E.M.C. Ballash PE.
2.	ABE 44, 46 & 66	1/1, 1/6, 1 & 2	02/16/93 & 03/02/96	E.M.C. Ballash PE.
3.	AC 4 & 6, ACE 4 & 6	1 & 2	04/29/97	E.M.C. Ballash PE.
4.	BC &BCO	1 / 2	03/03/93	E.M.C. Ballash PE.
5.	L Angle	1& 2, 1 & 2	04/23/93 & 10/06/95	E.M.C. Ballash PE.
6.	LTS/MTS	1/1, 1/7 & 2/7	09/27/96 & 11/16/93	E.M.C. Ballash PE.
7.	TA 9	1/4	03/30/93	E.M.C. Ballash PE.

E. STATEMENTS

1. No Financial Interest letter issued by Simpson Strong-Tie Co. Inc. with no date, signed by E.M.C. Ballash PE.
2. Code Compliance letter issued by Simpson Strong-Tie Co. Inc., dated 09/09/99, signed by E.M.C. Ballash PE.
3. Test Compliance letter issued by Kleinfelder, dated 08/20/99, signed by J. Nicolini.
4. No Change letter issued by Simpson Strong-Tie Co. Inc. dated 03/27/02, signed by J. M. Gilstrap, PE.

Candido F. Font PE.
Senior Product Control Examiner
NOA No 02-0919.05
Expiration Date: October 13, 2007
Approval Date: November 14, 2002

ABA STANDOFF POST BASES

Model No.[1]	Nominal Post Size	Material		Dimensions			Fasteners		Allowable Loads	
		Base	Strap	W_1	W_2	L	Anchor Dia.[2]	Post	Uplift	Down
ABA44	4x4	16	16	$3^9/_{16}$	$3^1/_2$	$3^1/_8$	$^1/_2$	(6) 10d	--	6000
ABA46	4x6	14	14	$3^9/_{16}$	$5^7/_{16}$	$5^3/_{16}$	$^5/_8$	(8) 16d	700	9435
ABA66	6x6	14	14	$5^1/_2$	$5^7/_{16}$	$5^1/_4$	$^5/_8$	(8) 16d	720	10665

[1]Not recommended for non-top-supported installations such as fences.

[2]For pre-pour installed anchors, embed 4" into concrete. For epoxy or wedge anchors, select and install according to manufacturer's recommendations. Install required washer - not included.

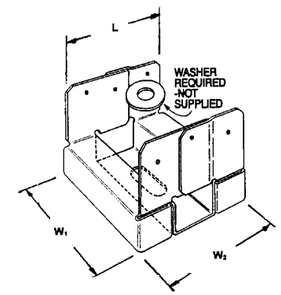

ABA44 (Other sizes similar)

(W_1 is an Inside Dimension)

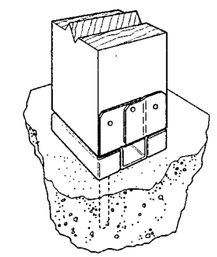

Typical ABA44 Installation

PRODUCT APPROVAL
Miami-Dade County, Florida
02-0919.05
10/13/07
Miami-Dade Product Control Division

APPROVED AS COMPLYING WITH THE SOUTH FLORIDA BUILDING CODE
DATE October 13 1999
BY
PRODUCT CONTROL DIVISION
BUILDING CODE COMPLIANCE OFFICE
ACCEPTANCE NO. 99-0713.05

GENERAL NOTES:

1) Steel shall conform to 16 gauge (ABA44) and 14 gauge (ABA46 and ABA66) ASTM A-653 CS with $F_{y,min}$ = 28 ksi and $F_{u,min}$ = 38 ksi and have a minimum galvanized coating of G60.
2) Fasteners are common wire nails unless noted.
3) Allowable uplift loads have been increased 33% for wind loading with no other duration increases allowed. Allowable down loads have not been increased by any duration factor with no increases allowed.
4) Allowable loads are based on the National Design Specification for Wood Construction 1991 Edition & 1993 Errata, for Douglas Fir-Larch (G=0.50 or better) and tests performed in accordance with ASTM D1761.

FOR OFFICE USE

SIMPSON STRONG-TIE CO.,INC.
4637 Chabot Drive, Suite 200
Pleasanton, CA 94588

TITLE: ABA Standoff Post Bases

Drawing No.:

Sheet No.: 1/7

Drawing Date: 3-4-99

Revision Date: --

Evon M.C. Ballash, P.E. Civil #PE0051762

9/13/99
Evon M C Ballash

ABE STANDOFF POST BASES

Model No.[1]	Nominal Post Size	Material		Dimensions			Fasteners		Allowable Loads	
		Base	Strap	W_1	W_2	L	Anchor Dia.[2]	Post	Uplift	Down
ABE44	4x4	16	16	$3^9/_{16}$	$3^1/_2$	$3^1/_2$	$^1/_2$	6-10d	--	6665
ABE44R	Rough 4x4	16	16	4	$3^1/_2$	$3^1/_2$	$^1/_2$	6-10d	--	6665
ABE46	4x6	12	16	$3^9/_{16}$	$5^3/_8$	$5^7/_{16}$	$^5/_8$	8-16d	810	7335
ABE46R	Rough 4x6	12	16	$4^1/_{16}$	$5^3/_8$	$5^7/_{16}$	$^5/_8$	8-16d	--	7335
ABE66	6x6	12	14	$5^1/_2$	$5^1/_2$	$5^7/_{16}$	$^5/_8$	8-16d	900	12000
ABE66R	Rough 6x6	12	14	$6^1/_{16}$	$5^1/_2$	$5^7/_{16}$	$^5/_8$	8-16d	900	12000

[1]Not recommended for non-top-supported installations such as fences.

[2]For pre-poured installed anchors, embed 4" into concrete. For epoxy or wedge anchors, select and install according to anchor manufacturer's recommendations. Install required washer.

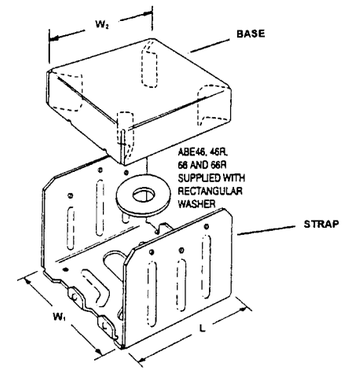

ABE44

(W_1 is an Inside Dimension)

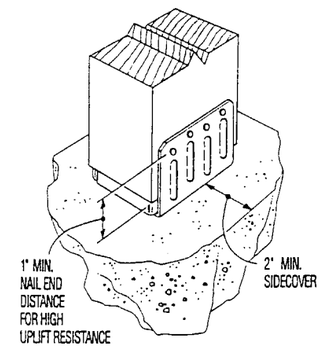

Typical ABE46R Installation for rough lumber (ABE Similar)

PRODUCT APPROVED
Miami-Dade County, Florida
Expires: 02-0919.05
10/13/07
By
Miami-Dade Product Control Division

APPROVED AS COMPLYING WITH THE SOUTH FLORIDA BUILDING CODE
DATE October 13 1999
BY
PRODUCT CONTROL DIVISION
BUILDING CODE COMPLIANCE OFFICE
ACCEPTANCE NO. 99-0713.05

GENERAL NOTES:

1) Steel shall conform to ASTM A-653 SS Grade 33 with $F_{y,min}$ = 33 ksi and $F_{u,min}$ = 45 ksi (12 gauge) ASTM A-653 CS with $F_{y,min}$ = 28 ksi and $F_{u,min}$ = 38 ksi (14 and 16 gauge) and have a minimum galvanized coating of G60.
2) Post fasteners are common wire nails.
3) Allowable uplift loads have been increased 33% for wind loading with no other duration increases allowed. Allowable down loads have not been increased by any duration factor with no increases allowed.
4) Allowable loads are based on the National Design Specification for Wood Construction 1991 Edition & 1993 Errata, for Douglas Fir-Larch (G=0.50 or better) and tests performed in accordance with ASTM D1761.

FOR OFFICE USE

SIMPSON STRONG-TIE CO.,INC.
4637 Chabot Drive, Suite 200
Pleasanton, CA 94588

TITLE: ABE Standoff Post Bases

Drawing No.:
Sheet No.: 2/7
Drawing Date: 3-4-99
Revision Date: --

Evon M.C. Ballash, P.E. Civil #PE0051762

9/13/99
Evon M C Ballash

AC/ACE POST CAPS

Model No.	Dimensions		Fasteners		Allowable Loads[1,2,3]	
	W	L	Beam	Post	Uplift	Lateral
AC4 MIN	$3^{9}/_{16}$	$6^{1}/_{2}$	12-16d	8-16d	1420	710
AC4 MAX	$3^{9}/_{16}$	$6^{1}/_{2}$	14-16d	14-16d	2485	1065
ACE4 MIN	--	$4^{1}/_{2}$	8-16d	6-16d	1065	700
ACE4 MAX	--	$4^{1}/_{2}$	10-16d	10-16d	1535	1065
AC6 MIN	$5^{1}/_{2}$	$8^{1}/_{2}$	12-16d	8-16d	1385	710
AC6 MAX	$5^{1}/_{2}$	$8^{1}/_{2}$	14-16d	14-16d	2265	1065

[1]Loads apply only when used in pairs.

[2]Lateral load is in the direction of the beam's axis.

[3]MIN nailing quantities and load values - fill all round holes.
MAX nailing quantities and load values - fill round and triangle holes.

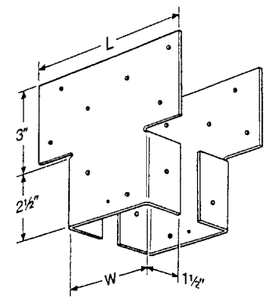

AC

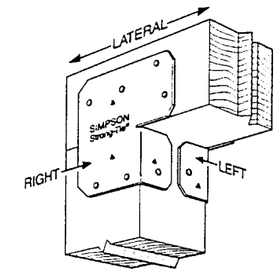

Typical ACE Installation

APPROVED AS COMPLYING WITH THE SOUTH FLORIDA BUILDING CODE
DATE October 13 1999
BY
PRODUCT CONTROL DIVISION
BUILDING CODE COMPLIANCE OFFICE
ACCEPTANCE NO. 99-0713.05

PRODUCT RENEWED
[illegible] Florida
[illegible] 02-0919.05
[illegible] 10/13/07
By
Miami Dade Product Control Division

GENERAL NOTES:

1) Steel shall conform to 18 gauge ASTM A-653 FS with $F_{y,min}$ = 33 ksi and $F_{u,min}$ = 45 ksi and have a minimum galvanized coating ofG60.
2) Fasteners are common wire nails.
3) Allowable loads have been increased 33% for wind loading with no other duration increases allowed.
4) Allowable loads are based on the National Design Specification for Wood Construction 1991 Edition & 1993 Errata, for Douglas Fir-Larch (G=0.50 or better) and tests performed in accordance with ASTM D1761.

FOR OFFICE USE	SIMPSON STRONG-TIE CO.,INC. 4637 Chabot Drive, Suite 200 Pleasanton, CA 94588	
	TITLE: AC/ACE Post Caps	
	Drawing No.:	Sheet No.: 3/7
	Drawing Date: 3-4-99	Revision Date: --
	Evon M.C. Ballash, P.E. Civil #PE0051762	

4/13/99
Evon M C Ballash

BC POST CAPS

Model No.[1]	Dimensions						Fasteners			Allowable Loads	
	W_1	W_2	L_1	L_2	H_1	H_2	Surface A	Surface B	Surface C	Uplift	Lateral
BC4	$3^9/_{16}$	$3^9/_{16}$	$2^7/_8$	$2^7/_8$	3	3	3-16d	3-16d	--	805	1000
BC4O	$3^9/_{16}$	--	$3^1/_4$	--	$2^1/_4$	--	3-16d	--	4-16d	--	535

[1]Not recommended for non-top-supported installations when used as a base

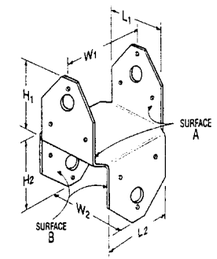

BC4 Cap/Base

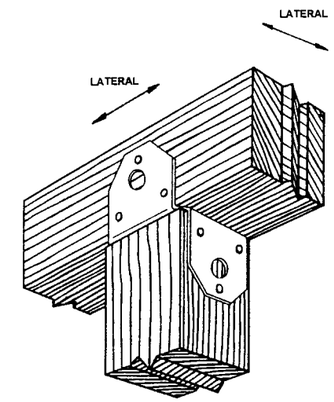

Typical BC4 Installation

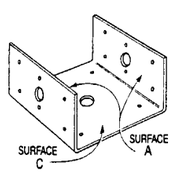

BCO Half Base

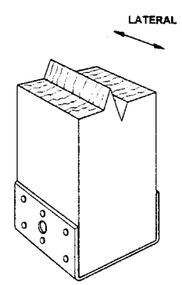

Typical BCO Installation

PRODUCT REVIEWED
Dade County, Florida
02-0919.05
10/13/07
By
Miami Dade Product Control Division

APPROVED AS COMPLYING WITH THE SOUTH FLORIDA BUILDING CODE
DATE October 13 1999
BY
PRODUCT CONTROL DIVISION
BUILDING CODE COMPLIANCE OFFICE
ACCEPTANCE NO. 99-0713.05

GENERAL NOTES:

1) Steel shall conform to 18 gauge ASTM A-653 FS with $F_{y,min}$ = 33 ksi and $F_{u,min}$ = 45 ksi and have a minimum galvanized coating ofG60.
2) Fasteners are common wire nails.
3) Allowable loads have been increased 33% for wind loading with no other duration increases allowed.
4) Allowable loads are based on the National Design Specification for Wood Construction 1991 Edition & 1993 Errata, for Douglas Fir-Larch (G=0.50 or better) and tests performed in accordance with ASTM D1761.

FOR OFFICE USE

SIMPSON STRONG-TIE CO.,INC.
4637 Chabot Drive, Suite 200
Pleasanton, CA 94588

TITLE: BC Post Caps

Drawing No.:
Sheet No.: 4/7
Drawing Date: 3-4-99
Revision Date: --

Evon M.C. Ballash, P.E. Civil #PE0051762

4/13/99
Evon M C Ballash

L70/LS50 REINFORCING AND SKEWABLE ANGLES

Model No.	L	Fasteners	Allowable Loads[1,2,3,4,5,6,7]	
			Floor (100)	Wind (133)
L70	7	8-10d	445	565 *
LS50	$4^7/_8$	8-10d	450	--

* Two L70 REQUIRED FOR A MINIMUM #700 UPLIFT.

[1]L angles - loads are for condition F_1 and F_2;
LS angles - loads are for condition F_1 only.

[2]Loads are for one part only.

[3]Use a minimum lumber thickness of $1^3/_4$". For $1^1/_2$" lumber, use 0.81 of the table load.

[4]Nail the L angle's wider leg into the joist to ensure table loads and allow correct nailing, as shown in the illustration.

[5]A minimum joist thickness of 3" must be used when L angles are installed on opposite sides of the joist.

[6]Joist must be constrained against rotation when using a single angle per connection.

[7]Allowable loads for more than one direction for the L angle cannot be added together. A design load which can be divided into components in the directions F_1 and F_2 must be evaluated as follows:

Design F_1 / Allowable F_1 + Design F_2 / Allowable $F_2 \leq 1.0$

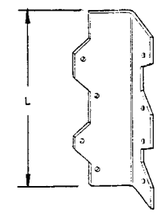

L70

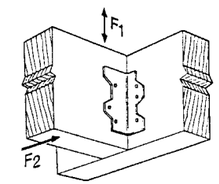

Typical L Installation

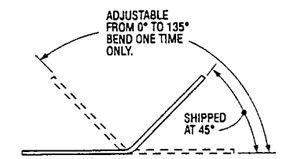

LS Top View

PRODUCT RENEWED
[illegible] Florida
[illegible] 02-0919.05
[illegible] 10/13/07
By
Miami Dade Product Control Division

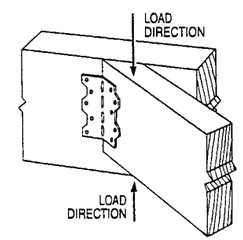

Typical LS Installation

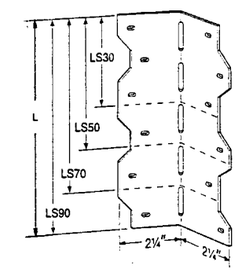

LS

APPROVED AS COMPLYING WITH THE SOUTH FLORIDA BUILDING CODE
DATE October 13 1999
BY
PRODUCT CONTROL DIVISION
BUILDING CODE COMPLIANCE OFFICE
ACCEPTANCE NO. 99-0713.15

GENERAL NOTES:

1) Steel shall conform to 16 gauge (L70) and 18 gauge (LS50) ASTM A-653 CS with $F_{y,min}$ = 28 ksi and $F_{u,min}$ = 38 ksi and have a minimum galvanized coating of G60.
2) Fasteners are common wire nails.
3) Allowable uplift loads have been increased 33% for wind loading with no other duration increases allowed. Allowable down loads have not been increased by any duration factor with no increases allowed.
4) Allowable loads are based on the National Design Specification for Wood Construction 1991 Edition & 1993 Errata, for Douglas Fir-Larch (G=0.50 or better) and tests performed in accordance with ASTM D1761.

FOR OFFICE USE

SIMPSON STRONG-TIE CO., INC.
4637 Chabot Drive, Suite 200
Pleasanton, CA 94588

TITLE: L/LS Reinforcing and Skewable Angles

Drawing No.:
Sheet No.: 5/7
Drawing Date: 3-4-99
Revision Date: --

Evon M.C. Ballash, P.E. Civil #PE0051762

9/13/99
Evon M C Ballash

LTS/MTS TWIST STRAPS

Model No.	L	Fasteners[1]		Allowable Loads			
				Uplift		Parallel to Plate (F_1)	Perpendicular to Plate (F_2)
		10d	10dx1 1/2"	10d	10dx1 1/2"		
MTS12	12	14-10d	14-10dx1 1/2"	815		75	125
MTS16	16	14-10d	14-10dx1 1/2"	815		75	125
MTS18	18	14-10d	14-10dx1 1/2"	815		75	125
MTS20	20	14-10d	14-10dx1 1/2"	815		75	125
MTS30	30	14-10d	14-10dx1 1/2"	815		--	--

[1]Install half of the fasteners in each end of the strap to achieve full loads. When wrapped over a truss, install one nail on the side of the truss in the hole closet to the middle of the strap, three nails on top of the truss and three nails on the back of the truss. When attached to a double top plate, install one nail in the front of the upper plate closes to the middle of the strap, two nails in the front of the lower plate and three nails in the bottom of the lower plate.

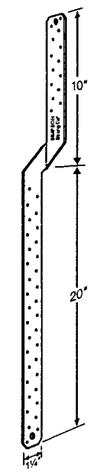

MTS30

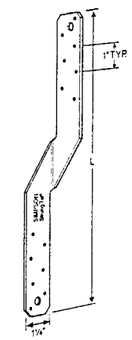

MTS12
(Other Sizes Similar)

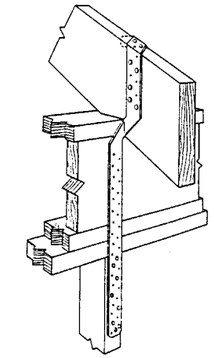

Typical
MTS30
Installation

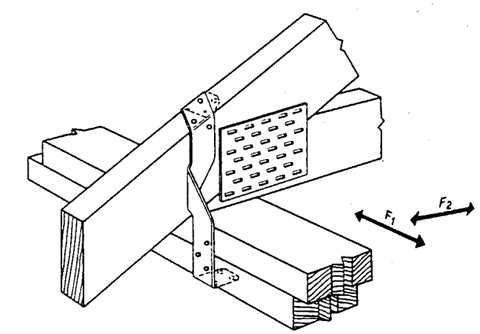

MTS Installation
as a Truss-to-
Top Plate Tie

PRODUCT RENEWED
as complying with the Florida
Building Code
Application No. 02-0919.05
Expiration Date 10/13/07
By
Miami Dade Product Control
Division

APPROVED AS COMPLYING WITH THE
SOUTH FLORIDA BUILDING CODE
DATE October 13 1999
BY
PRODUCT CONTROL DIVISION
BUILDING CODE COMPLIANCE OFFICE
ACCEPTANCE NO. 99-0713.05

GENERAL NOTES:

1) Steel shall conform to 16 gauge ASTM A-653 FS with $F_{y,min}$ = 28 ksi and $F_{u,min}$ = 38 ksi and have a minimum galvanized coating of G60.
2) Fasteners diameter is 0.148".
3) Allowable loads have increased 33% for wind loading with no other duration increases allowed.
4) Allowable loads are based on the National Design Specification for Wood Construction 1991 Edition & 1993 Errata, for Douglas Fir-Larch (G=0.50 or better) and tests performed in accordance with ASTM D1761.

FOR OFFICE USE

SIMPSON STRONG-TIE CO.,INC.
4637 Chabot Drive, Suite 200
Pleasanton, CA 94588

TITLE: MTS Twist Straps

Drawing No.:
Sheet No.: 6/7
Drawing Date: 3-4-99
Revision Date: --

Evon M.C. Ballash, P.E. Civil #PE0051762

9/13/99
Evon M.C. Ballash

TA STAIRCASE ANGLES

Model No.	Fasteners[1]		Allowable Download (100)
	Stringer	Tread	
TA9	3-SDS$^1/_4$ x $1^1/_2$	2-SDS$^1/_4$ x $1^1/_2$	315

[1] $^1/_4$" lag bolts may be used. Follow the code requirements for predrilling.

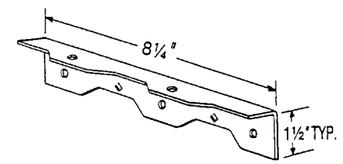

TA9

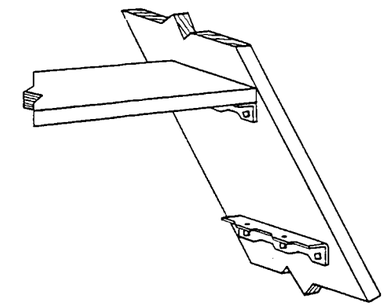

Typical TA9 Installation

PRODUCT RENEWED
as complying with the Florida
Building Code
Acceptance No. 02-0919.05
Expiration Date 10/13/07
By
Miami-Dade Product Control Division

APPROVED AS COMPLYING WITH THE
SOUTH FLORIDA BUILDING CODE
DATE October 13 19 99
BY
PRODUCT CONTROL DIVISION
BUILDING CODE COMPLIANCE OFFICE
ACCEPTANCE NO. 99-0713.05

GENERAL NOTES:

1) Steel shall conform to 12 gauge ASTM A-653 CS with $F_{y,min}$ = 28 ksi and $F_{u,min}$ = 38 ksi and have a minimum galvanized coating of G60.
2) SDS$^1/_4$ x $1^1/_2$ screws are Simpson Strong-Tie's self-drilling screws. Fasteners shall have a diameter of 0.25" and a minimum length of 1.5".
3) Allowable loads have not been increased by any duration factor with no increases allowed.
4) Allowable loads are based on the National Design Specification for Wood Construction 1991 Edition & 1993 Errata, for Douglas Fir-Larch (G=0.50 or better) and tests performed in accordance with ASTM D1761.

FOR OFFICE USE

SIMPSON STRONG-TIE CO.,INC.
4637 Chabot Drive, Suite 200
Pleasanton, CA 94588

TITLE: TA9 Staircase Angles

Drawing No.:
Sheet No.: 7/7
Drawing Date: 3-4-99
Revision Date: --

Evon M.C. Ballash, P.E. Civil #PE0051762

9/13/99
Evon M.C. Ballash