MIAMI-DADE

BUILDING CODE COMPLIANCE OFFICE (BCCO)
PRODUCT CONTROL DIVISION

MIAMI-DADE COUNTY, FLORIDA
METRO-DADE FLAGLER BUILDING
140 WEST FLAGLER STREET, SUITE 1603
MIAMI, FLORIDA 33130-1563
(305) 375-2901 FAX (305) 375-2908

NOTICE OF ACCEPTANCE (NOA)

Andersen Corporation
100 Fourth Avenue
Bayport, MN 55003

SCOPE:
This NOA is being issued under the applicable rules and regulations governing the use of construction materials. The documentation submitted has been reviewed by Miami-Dade County Product Control Division and accepted by the Board of Rules and Appeals (BORA) to be used in Miami Dade County and other areas where allowed by the Authority Having Jurisdiction (AHJ).

This NOA shall not be valid after the expiration date stated below. The Miami-Dade County Product Control Division (In Miami Dade County) and/or the AHJ (in areas other than Miami Dade County) reserve the right to have this product or material tested for quality assurance purposes. If this product or material fails to perform in the accepted manner, the manufacturer will incur the expense of such testing and the AHJ may immediately revoke, modify, or suspend the use of such product or material within their jurisdiction. BORA reserves the right to revoke this acceptance, if it is determined by Miami-Dade County Product Control Division that this product or material fails to meet the requirements of the applicable building code.

This product is approved as described herein, and has been designed to comply with the High Velocity Hurricane Zone of the Florida Building Code.

DESCRIPTION: Series "Perma-Shield Sashless" Wood Fixed Window

APPROVAL DOCUMENT: Drawing No. **DADE-30608**, titled "Unit Assembly, Picture Window, Impact", Sheets 1 and 2 of 2, prepared by manufacturer, dated 3/5/99, revised on 10/17/02, bearing the Miami-Dade County Product Control Approval stamp with the Notice of Acceptance number and approval date by the Miami-Dade County Product Control Division.

MISSILE IMPACT RATING: Large and Small Missile Impact

LABELING: Each unit shall bear a permanent label with the manufacturer's name or logo, city, state and following statement: "Miami-Dade County Product Control Approved", unless otherwise noted herein.

RENEWAL of this NOA shall be considered after a renewal application has been filed and there has been no change in the applicable building code negatively affecting the performance of this product.

TERMINATION of this NOA will occur after the expiration date or if there has been a revision or change in the materials, use, and/or manufacture of the product or process. Misuse of this NOA as an endorsement of any product, for sales, advertising or any other purposes shall automatically terminate this NOA. Failure to comply with any section of this NOA shall be cause for termination and removal of NOA.

ADVERTISEMENT: The NOA number preceded by the words Miami-Dade County, Florida, and followed by the expiration date may be displayed in advertising literature. If any portion of the NOA is displayed, then it shall be done in its entirety.

INSPECTION: A copy of this entire NOA shall be provided to the user by the manufacturer or its distributors and shall be available for inspection at the job site at the request of the Building Official.
This NOA **renews NOA # 00-1018.03** and, consists of this page 1 as well as approval document mentioned above. The submitted documentation was reviewed by **Manuel Perez, P.E.**

PRODUCT CONTROL ACCEPTED

Andersen Corporation

NOTICE OF ACCEPTANCE: EVIDENCE SUBMITTED
(For File ONLY. Not part of NOA)

A. DRAWING

1. Manufacturer's die drawings and sections.
2. Drawing No. **DADE-30608**, titled "Unit Assembly, Picture Window, Impact", Sheets 1 and 2 of 2, prepared by manufacturer, dated 3/5/99, revised on 10/17/02.

B. TESTS

1. Test reports on 1) Air Infiltration Test, per SFBC, PA 202-94
   2 Uniform Static Air Pressure Test, Loading per, PA 202-94.
   3) Large Missile Impact Test per SFBC, PA 201-94.
   4) Cyclic Wind Pressure Loading per SFBC, PA 203-94
   along with marked-up drawing of arched top wood fixed window, glazed w/ 17/32" laminated annealed, prepared by Architectural Testing Inc. Test Report No. **ATI-02-32062.01**, dated 05/05/00 along with revised marked-up drawings, signed and sealed by Allen N. Reeves, P.E.

Submitted under file No. 99-0330.02

2. Test reports on 1) Air Infiltration Test, per SFBC, PA 202-94
   2)Uniform Static Air Pressure Test, Loading per, PA 202-94.
   3) Water Resistance Test, per PA 202-94.
   4) Large Missile Impact Test per SFBC, PA 201-94
   5) Cyclic Wind Pressure Loading per SFBC, PA 203-94
   along with assembly & part drawing of a wood fixed window prepared by Architectural Testing, Inc., test report No. **02-30992.01**, dated 01/28/99, signed and sealed by A. N. Reeves, P.E.

C. CALCULATIONS

Submitted under file No. 99-0330.02

1. Installation Analysis Report prepared by Richard Boyette, project # 98-1212 sheets 1 to 6 of 6, dated 03/19/99, signed and sealed by R. Boyette PE.
2. Revised Installation Analysis Report prepared by Richard Boyette, P.E., dated September 13, 2000, signed and sealed by Richard Boyette, P.E.

D. STATEMENTS

1. Letter stating that the engineer is still practicing, dated on January 18, 2002, signed and sealed by R. Boyette, PE.
2. Laboratory Compliance Letter issued by Architectural Testing, Inc., dated 03/05/99, signed and sealed by Allen N. Reeves, P.E.
3. Letter from Andersen Corporation, dated 8/13/02, stating that the product has not changed since it was originally approved.

Manuel Perez, P.E.
Product Control Examiner
NOA No 02-0919.11
Expiration Date: October 21, 2007
Approval Date: November 14, 2002

Andersen Corporation

NOTICE OF ACCEPTANCE: EVIDENCE SUBMITTED
(For File ONLY. Not part of NOA)

E. MATERIAL CERTIFICATIONS

1. Notice of Acceptance No. **98-0608.03** issued to E.I. DuPont DeNemours for "Sentry Glass Plus" dated 01/14/99, expiring on 01/14/02.
2. Notice of Acceptance No. **97-1224.07** issued to Solutia, Inc. for their "Polyvinyl Butyral Interlayer Saflex" dated 06/25/98, expiring on 01/09/00.

F. OTHER

1. Notice of Acceptance No. **00-1018.03**, issued to Anderson Corporation for their Series "Perma-Shield Sashless" Wood Fixed Window – Impact Resistance, approved on 06/07/01 and expiring on 10/21/02.

Manuel Perez, P.E.
Product Control Examiner
NOA No 02-0919.11
Expiration Date: October 21, 2007
Approval Date: November 14, 2002

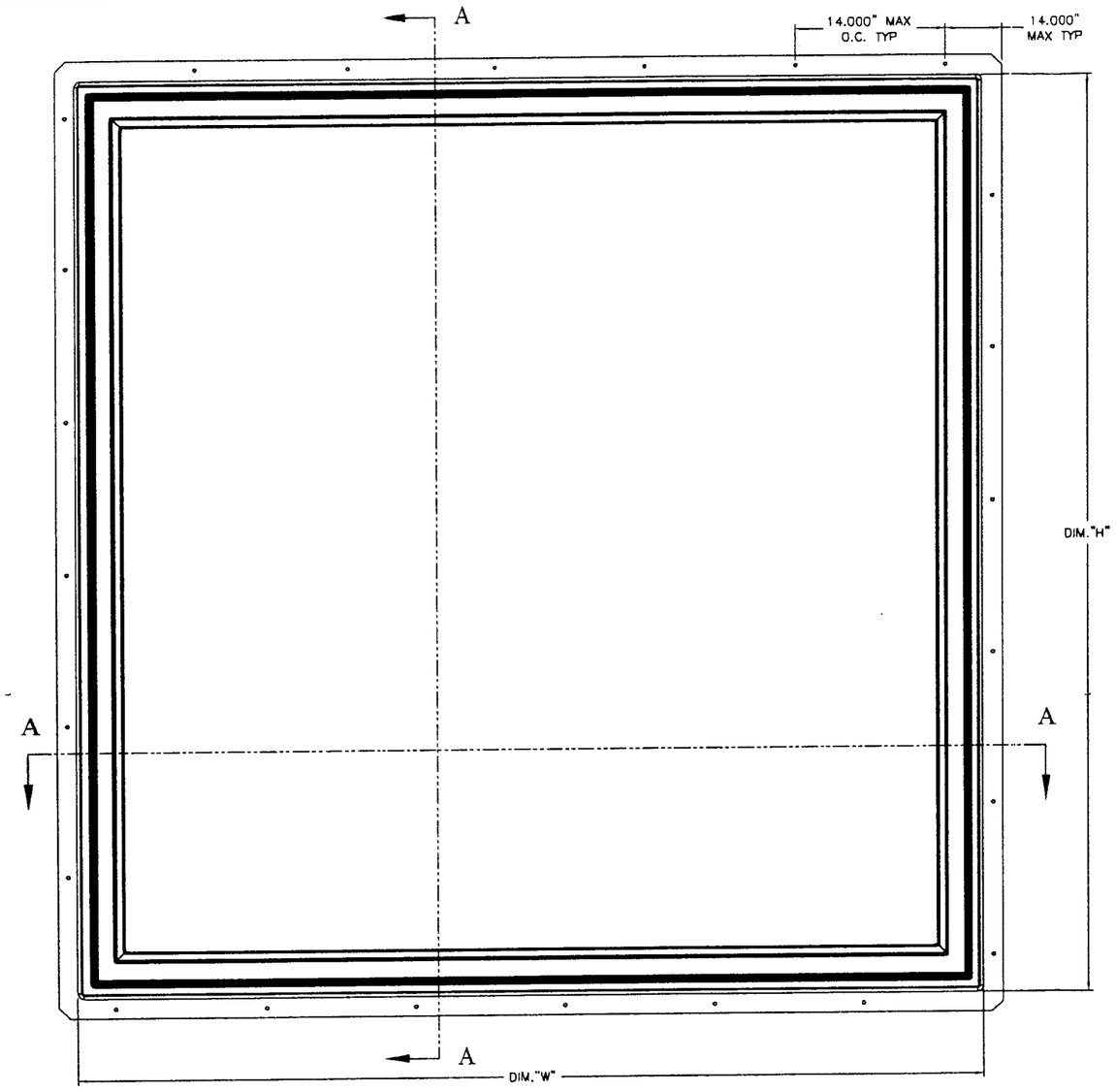

QTY.	DESCRIPTION	LOCATION
BEAD	SEALANT	FILLET BEAD
BEAD	SEALANT	BED GLAZING & BACK GLAZING
A/R	CLIP INSTALLATION KIT (4) #8 X 1-1/4" SCREWS	SECURE CLIP TO FRAME AND OPENING
A/R	NAILS, 16 GA X 1.75"	ATTACHMENT OF OUTSIDE STOPS TO FRAME & SILL
24-36	NAILS, 15 GA X 1.75"	ATTACHMENT OF INSIDE GLASS STOPS TO FRAME
24-48	NAILS, 15 GA X 1.75"	ATTACHMENT OF OUTSIDE GLASS STOPS TO FRAME
6	STAPLES, .500" X 2.000"	ATTACHMENT OF SILL TO SIDE JAMBS
6	STAPLES, .500" X 2.000"	ATTACHMENT OF HEAD JAMB TO SIDE JAMBS
A/R	ADHESIVE	ATTACHMENT OF FRAME COVER TO JAMBS

FASTENERS LIST

SIZE DES	DIM "W"	DIM "H"	DP RATING TYPE "A"	DP RATING TYPE "B"
P5060/P6050*	59.875	71.875	+66/-66	+67/-75
P5055/P5550*	59.875	64.812	+62/-74	+67/-75
P5050	59.875	59.875	+67/-75	+67/-75
P4560/P6045*	52.812	71.875	+67/-75	+67/-75
P4555*/P5545	52.812	64.812	+67/-75	+67/-75
P4550*/P5045	52.812	59.875	+67/-75	+67/-75
P4545	52.812	52.812	+67/-75	+67/-75
P4060*/P6040	48.000	71.875	+67/-75	+67/-75
P4055*/P5540	48.000	64.812	+67/-75	+67/-75
P4050*/P5040	48.000	59.875	+67/-75	+67/-75
P4045*/P4540	48.000	52.812	+67/-75	+67/-75
P4040	48.000	48.000	+67/-75	+67/-75
P3560/P6035*	40.812	71.875	+67/-75	+67/-75
P3555*/P5535	40.812	64.812	+67/-75	+67/-75
P3550/P5035	40.812	59.875	+67/-75	+67/-75
P3545/P4535	40.812	52.812	+67/-75	+67/-75
P3540/P4035	40.812	48.000	+67/-75	+67/-75
P3535	40.812	40.812	+67/-75	+67/-75
P3060*/P6030	35.938	71.875	+67/-75	+67/-75
P3055*/P5530	35.938	64.812	+67/-75	+67/-75
P3050*/P5030	35.938	59.875	+67/-75	+67/-75
P3045*/P4530	35.938	52.812	+67/-75	+67/-75
P3040/P4030	35.938	48.000	+67/-75	+67/-75
P3035*/P3530	35.938	40.812	+67/-75	+67/-75
P3030	35.938	35.938	+67/-75	+67/-75

* DIMENSIONS OF "W" + "H" SHALL BE INVERTED FOR UNIT DESIGNATION AFTER THE (/) MARK.

SIZE DES	# OF CLIPS PER HEAD/SILL	# OF CLIPS PER SIDE
P5060	4	4
P4560	4	4
P4060	3	4
P3560	3	4
P3060	3	4
P5055	4	4
P4555	4	4
P4055	3	4
P3555	3	4
P3055	3	4
P6050	4	3
P5550	4	3
P5050	4	3
P4550	4	3
P4050	3	3
P3550	3	3
P3050	3	3
P6045	4	3
P5545	4	3
P5045	4	3
P4545	4	3
P4045	3	3
P3545	3	3
P3045	3	3
P6040	4	3
P5540	4	3
P5040	4	3
P4540	4	3
P4040	3	3
P3540	3	3
P3040	3	3
P6035	4	3
P5535	4	3
P5035	4	3
P4535	4	3
P4035	3	3
P3535	3	3
P3035	3	3
P6030	4	2
P5530	4	2
P5030	4	2
P4530	4	2
P4030	3	2
P3530	3	2
P3030	3	2

JAMB CLIP INSTALLATION

Approved as complying with the Florida Buiding Code
Date NOV. 14, 2002
NOA# 02-0919.11
Miami Dade Product Control Division
By Manuel Perez

NOTES:

1. INSTALLATION CLIP FASTENER LOCATIONS:
   WOOD BUCK: JAMB CLIPS ARE TO BE APPROXIMATELY AT A MAX DISTANCE OF 6" FROM ANY CORNER, 24" MAX O.C. ON THE JAMBS AND 20" MAX ON THE HEAD/SILL. SEE TABLE FOR JAMB CLIP QUANTITY FOR EACH UNIT SIZE. EACH JAMB CLIP REQUIRES (4) SCREWS PER CLIP – (2) FOR FRAME AND (2) FOR OPENING.
   MASONRY: TAPCON SPACING AND LOCATION TO BE THE SAME AS WOOS SCREW SPACING AND LOCATION.
2. GLAZING SPECIFICATIONS:
   HEAT STRENGTHENED: UNITS UTILIZE 3/8" (.391") THICK LAMINATED GLASS FABRICATED & COMPOSED OF TWO NOMINAL 5/32" THICK HEAT-STRENGTHENED SHEETS AND A .090" PVB GRAY OR CLEAR INNER LAYER BY SOLUTIA OR DUPONT.
   ANNEALED: UNITS UTILIZE 17/32" (.532") THICK LAMINATED GLASS FABRICATED & COMPOSED OF TWO NOMINAL 1/4" THICK ANNEALED SHEETS AND A .090" PVB GRAY OR CLEAR INNER LAYER BY SOLUTIA OR DUPONT.
   METHOD – GLASS IS SET FROM THE EXTERIOR WITH SILICONE BED GLAZING AND SILICONE BACK GLAZING.
   WOOD (PINE) GLASS STOPS ARE USED TO SET THE INTERIOR. SILICONE IS DOW CORNING DC983-2, DC30117 OR DC9-1350.
3. GLASS BITE = .750".
4. INSTALLATION CLIPS ARE 1-1/2" X 3" X 0.035" GALVANIZED STEEL WITH (4) #8 X 1-1/4" WOOD SCREWS.
5. FRAME CONSTRUCTION: THE FRAME MEMBERS CONSIST OF MOLDED PINE. THE CORNER JOINTS ARE DADO TYPE JOINTS AND FASTENED WITH 3 14GA X 2.500" STAPLES PER CORNER. THE OUTSIDE GLASS STOPS ARE MOLDED PINE AND ATTACHED TO JAMB SILL WITH 1.750" X 16 GA. NAILS. THE INTERIOR GLASS STOPS ARE MOLDED PINE AND ATTACHED WITH 15GA X 1.750" NAILS. THE TRIM STOPS ARE MOLDED PINE, ATTACHED WITH 15GA X 1.750" NAILS. THE EXTERIOR IS PVC CLADDING THAT IS GLUED DOWN TO THE WOOD FRAME MEMBERS.

REV	DATE
BB	10/17/02

TITLE
UNIT ASSEMBLY,
PICTURE WINDOW, IMPACT

Andersen Corporation
Bayport, Minnesota 55003

THESE DRAWINGS ARE PROVIDED AS A SERVICE BY ANDERSEN CORPORATION FOR THE BENEFIT OF ITS CUSTOMERS. FINAL RESPONSIBILITY FOR ACCURACY OF DESIGN, FINAL SPECIFICATIONS, DRAWINGS AND FOR THE ACTUAL INSTALLATION SUGGESTED BY THESE DRAWINGS LIES WITH THE ARCHITECT, ENGINEER AND/OR CONTRACTOR.

COPYRIGHT ANDERSEN CORPORATION 1998. ALL RIGHTS RESERVED.

APPROVE/DATE 3/5/99
DRAWING NUMBER DADE-30608
SHT. 1 OF 2

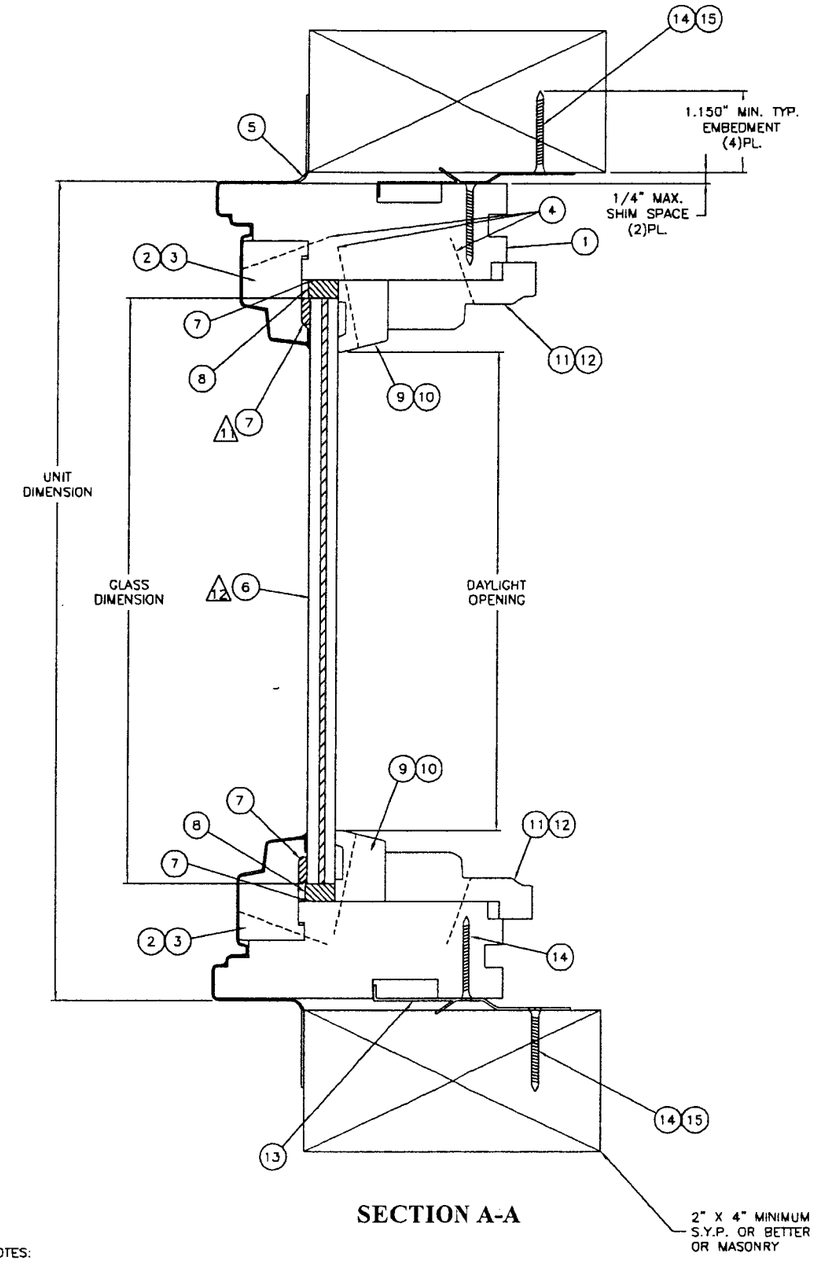

SECTION A-A

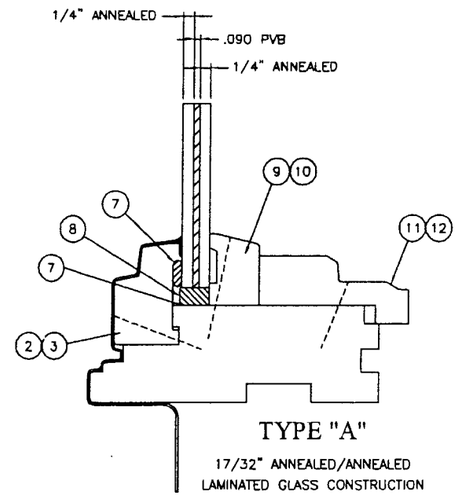

TYPE "A"

17/32" ANNEALED/ANNEALED
LAMINATED GLASS CONSTRUCTION

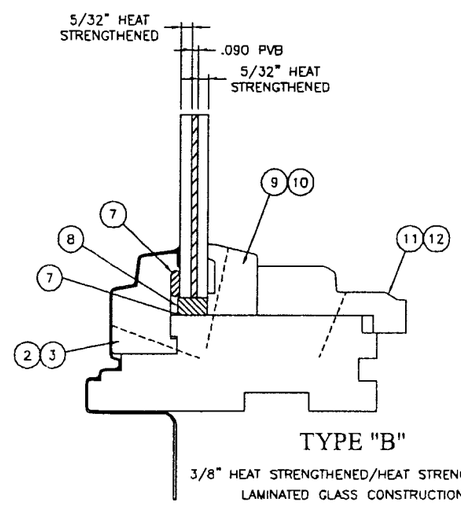

TYPE "B"

3/8" HEAT STRENGTHENED/HEAT STRENGTHENED
LAMINATED GLASS CONSTRUCTION

ITEM NO.	DESCRIPTION	DRAWING	MATERIAL	HEIGHT	WIDTH
15	1/4" DIAMETER TAPCON	–	STEEL	–	–
14	WOOD SCREWS, #8 X 1-1/4" INSTALLATION	3621790	STEEL	–	–
13	CLIP, JAMB INSTALLATION	20165	GALVANIZED	–	–
12	TRIM, STOP SASH HEAD & SILL SQUARED END	30666	WOOD	0.938	2.125
11	TRIM, STOP, SASH SIDE, COPED END	30667	WOOD	0.938	2.125
10	STOP, HEAD & SILL, GLASS, SQUARED END	30397	WOOD	1.000	0.719
9	STOP, INSIDE GLASS COPED	30398	WOOD	1.000	0.719
8	SPACERS, GLASS	20065	PVC	–	–
7	SEALANT, BED & BACK GLAZING	MDS0012/42	SILICONE	–	–
6	GLASS, MONOLITHIC LAMINATED	04170/04171	–	–	–
5	COVER, FRAME	30377	VINYL	–	–
4	NAILS, 16 GA X 1.750"	27255	GALVANIZED	–	–
3	STOP, OUTSIDE, HEAD & SILL	30395	WOOD	1.419	0.926
2	STOP, OUTSIDE, SIDE	30396	WOOD	1.419	0.926
1	JAMB, SIDES, HEAD & SILL	30394	WOOD	1.360	4.125

DRAWING REFERENCE LIST

UNIT DES.	TOTAL NAILS PER GLASS STOP	TOTAL NAILS PER OUTSIDE STOP	TOTAL NAILS PER TRIM STOP
P60	9 EQL SP	12 EQL SP	3 EQL SP
P55	8 EQL SP	11 EQL SP	2 EQL SP
P50	8 EQL SP	10 EQL SP	2 EQL SP
P45	7 EQL SP	9 EQL SP	2 EQL SP
P40	7 EQL SP	8 EQL SP	2 EQL SP
P35	6 EQL SP	7 EQL SP	2 EQL SP
P30	6 EQL SP	6 EQL SP	2 EQL SP

CALL #	GLASS DIMENSION	DAYLIGHT OPENING	UNIT DIMENSION
	WIDTH		
P50	56.593	55.091	59.875
P45	49.530	48.028	52.812
P40	44.718	43.216	48.000
P35	37.530	36.028	40.812
P30	32.656	31.154	35.935

CALL #	GLASS DIMENSION	DAYLIGHT OPENING	UNIT DIMENSION
	HEIGHT		
P60	68.593	67.091	71.875
P55	61.530	60.028	64.812
P50	56.593	55.091	59.875
P45	49.530	48.028	52.812
P40	44.718	43.216	48.000
P35	37.530	36.028	40.812
P30	32.656	31.154	35.935

NOTES:

7. ALL DIMENSIONS ARE IN INCHES.
8. HORIZONTAL & VERTICAL CROSS SECTIONS ARE IDENTICAL.
9. ROUGH OPENING = UNIT DIMENSION + 1/2".

11 SILICONE BED GLAZING MAY BE EITHER DOW CORNING SINGLE COMPONENT (DC30117), DOW CORNING SINGLE COMPONENT (DC9-1350) OR DOW CORNING DOUBLE COMPONENT (DC983-2).

12 LAMINATED GLASS MAY BE EITHER CLEAR OR TINT WITH PVB BY DUPONT OR SOLUTIA.

REV	DATE
BB	10/17/02

Approved as complying with the Florida Buiding Code
Date NOV. 14, 2002
NOA# 02-0919.11
Miami Dade Product Control Division
By Manuel Perez

TITLE
UNIT ASSEMBLY,
PICTURE WINDOW, IMPACT

Andersen Corporation
Bayport, Minnesota 55003

THESE DRAWINGS ARE PROVIDED AS A SERVICE BY ANDERSEN CORPORATION FOR THE BENEFIT OF ITS CUSTOMERS. FINAL RESPONSIBILITY FOR ACCURACY OF DESIGN, FINAL SPECIFICATIONS, DRAWINGS AND FOR THE ACTUAL INSTALLATION SUGGESTED BY THESE DRAWINGS LIES WITH THE ARCHITECT, ENGINEER AND/OR CONTRACTOR.

COPYRIGHT ANDERSEN CORPORATION 1998. ALL RIGHTS RESERVED.

APPROVE/DATE 3/5/99

DRAWING NUMBER DADE-30608

SHT. 2 OF 2