MIAMI-DADE

BUILDING CODE COMPLIANCE OFFICE (BCCO)
PRODUCT CONTROL DIVISION

MIAMI-DADE COUNTY, FLORIDA
METRO-DADE FLAGLER BUILDING
140 WEST FLAGLER STREET, SUITE 1603
MIAMI, FLORIDA 33130-1563
(305) 375-2901 FAX (305) 375-2908

NOTICE OF ACCEPTANCE (NOA)

Yale Ogron Manufacturing, Co.
671 West 18th Street
Hialeah, FL 33010

SCOPE:
This NOA is being issued under the applicable rules and regulations governing the use of construction materials. The documentation submitted has been reviewed by Miami-Dade County Product Control Division and accepted by the Board of Rules and Appeals (BORA) to be used in Miami Dade County and other areas where allowed by the Authority Having Jurisdiction (AHJ).

This NOA shall not be valid after the expiration date stated below. The Miami-Dade County Product Control Division (In Miami Dade County) and/or the AHJ (in areas other than Miami Dade County) reserve the right to have this product or material tested for quality assurance purposes. If this product or material fails to perform in the accepted manner, the manufacturer will incur the expense of such testing and the AHJ may immediately revoke, modify, or suspend the use of such product or material within their jurisdiction. BORA reserves the right to revoke this acceptance, if it is determined by Miami-Dade County Product Control Division that this product or material fails to meet the requirements of the applicable building code.

This product is approved as described herein, and has been designed to comply with the High Velocity Hurricane Zone of the Florida Building Code.

DESCRIPTION: Series "4000" Aluminum Sliding Glass Door with Steel Reinforcement

APPROVAL DOCUMENT: Drawing No. **W02-74,** titled "Series-4000 Alum. Sliding Glass Door", sheets 1 through 4 of 4, prepared by Al Farooq Corporation, dated 8/19/02, signed and sealed by Humayoun Farooq, P.E., bearing the Miami-Dade County Product Control Approval stamp with the Notice of Acceptance number and approval date by the Miami-Dade County Product Control Division.

MISSILE IMPACT RATING: None

LABELING: Each unit shall bear a permanent label with the manufacturer's name or logo, city, state and following statement: "Miami-Dade County Product Control Approved", unless otherwise noted herein.

RENEWAL of this NOA shall be considered after a renewal application has been filed and there has been no change in the applicable building code negatively affecting the performance of this product.

TERMINATION of this NOA will occur after the expiration date or if there has been a revision or change in the materials, use, and/or manufacture of the product or process. Misuse of this NOA as an endorsement of any product, for sales, advertising or any other purposes shall automatically terminate this NOA. Failure to comply with any section of this NOA shall be cause for termination and removal of NOA.

ADVERTISEMENT: The NOA number preceded by the words Miami-Dade County, Florida, and followed by the expiration date may be displayed in advertising literature. If any portion of the NOA is displayed, then it shall be done in its entirety.

INSPECTION: A copy of this entire NOA shall be provided to the user by the manufacturer or its distributors and shall be available for inspection at the job site at the request of the Building Official.
This NOA consists of this page 1 as well as approval document mentioned above.
The submitted documentation was reviewed by **Theodore Berman, P.E.**

Yale Ogron Manufacturing, Co.

NOTICE OF ACCEPTANCE: EVIDENCE SUBMITTED
(For File ONLY. Not part of NOA)

A. DRAWINGS

1. Manufacturer's die drawings and sections.
2. Drawing No. **W02-74,** titled "Series-4000 Alum. Sliding Glass Door", sheets 1 through 4 of 4, prepared by Al Farooq Corporation, dated 8/19/02, signed and sealed by Humayoun Farooq, P.E.

B. TESTS

1. Test reports on 1) Air Infiltration Test, per FBC, TAS 202-94
   2) Uniform Static Air Pressure Test, Loading per FBC, TAS 202-94
   3) Water Resistance Test, per FBC, TAS 202-94
   4) Forced Entry Test, per FBC 3603.2 (b) and TAS 202-94

   along with marked-up drawings and installation diagram of an aluminum sliding glass door, prepared by Fenestration Testing Laboratory, Inc., Test Report No. FTL 99009, dated 2/15/99, signed and sealed by Joseph Chan, P.E.

C. CALCULATIONS

1. Anchor Calculations and structural analysis, prepared by Al Farooq Corporation, dated 8/14/02, signed and sealed by Humayoun Farooq, P.E.

D. MATERIAL CERTIFICATIONS

1. None

E. STATEMENTS

1. Statement letter of conformance, dated 8/14/02, signed and sealed by Humayoun Farooq, P.E.
2. Statement letter of no financial interest, dated 8/14/02, signed and sealed by Humayoun Farooq, P.E.
3. Statement letter of no financial interest, dated 8/19/02, signed and sealed by Sonia Chance.

F. OTHER

1. Letter from Pistorino & Alam Consulting Engineers, Inc.

Theodore Berman, P.E.
Deputy Director, Product Control Division
NOA No 02-0927.12
Expiration Date: December 05, 2007
Approval Date: December 05, 2002

DESIGN LOAD RATING - PSF			
PANEL WIDTH	DOOR HEIGHT	EXT. (+)	INT. (-)
2/0	80-1/2"	55.3	86.5
2/6		55.3	86.5
3/0		55.3	86.5
3/6		55.3	82.4
4/0		55.3	75.9
4/6		55.3	71.3
2/0	95-1/2"	55.3	72.9
2/6		55.3	72.9
3/0		55.3	72.9
3/6		55.3	65.8
4/0		55.0	60.0

SERIES-4000 ALUMINUM SLIDING GLASS DOOR

DESIGN LOAD RATING FOR THESE DOORS TO BE AS PER CHART SHOWN ABOVE.

THESE DOORS ARE NOT RATED FOR IMPACT.
MIAMI-DADE COUNTY APPR'D IMPACT RESISTANT SHUTTERS ARE REQD.

THIS PRODUCT IS DESIGNED TO COMPLY WITH THE HIGH VELOCITY HURRICANE ZONE OF THE 2001 FLORIDA BUILDING CODE.
ALSO FOR WIND LOADS AS PER ASCE 7 USING CORRESPONDING LOADS.

WOOD BUCKS BY OTHERS, MUST BE ANCHORED PROPERLY TO TRANSFER LOADS TO THE STRUCTURE.

ANCHORS SHALL BE AS LISTED, SPACED AS SHOWN ON DETAILS. ANCHOR EMBEDMENT TO BASE MATERIAL SHALL BE BEYOND WALL DRESSING OR STUCCO.

ANCHORING OR LOADING CONDITIONS NOT SHOWN IN THESE DETAILS ARE NOT PART OF THIS APPROVAL.

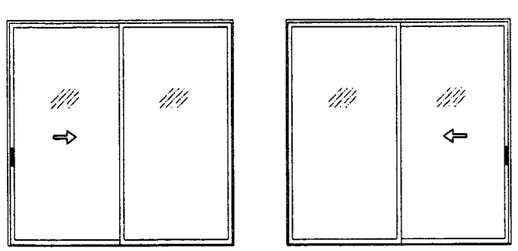

APPROVED CONFIGURATIONS

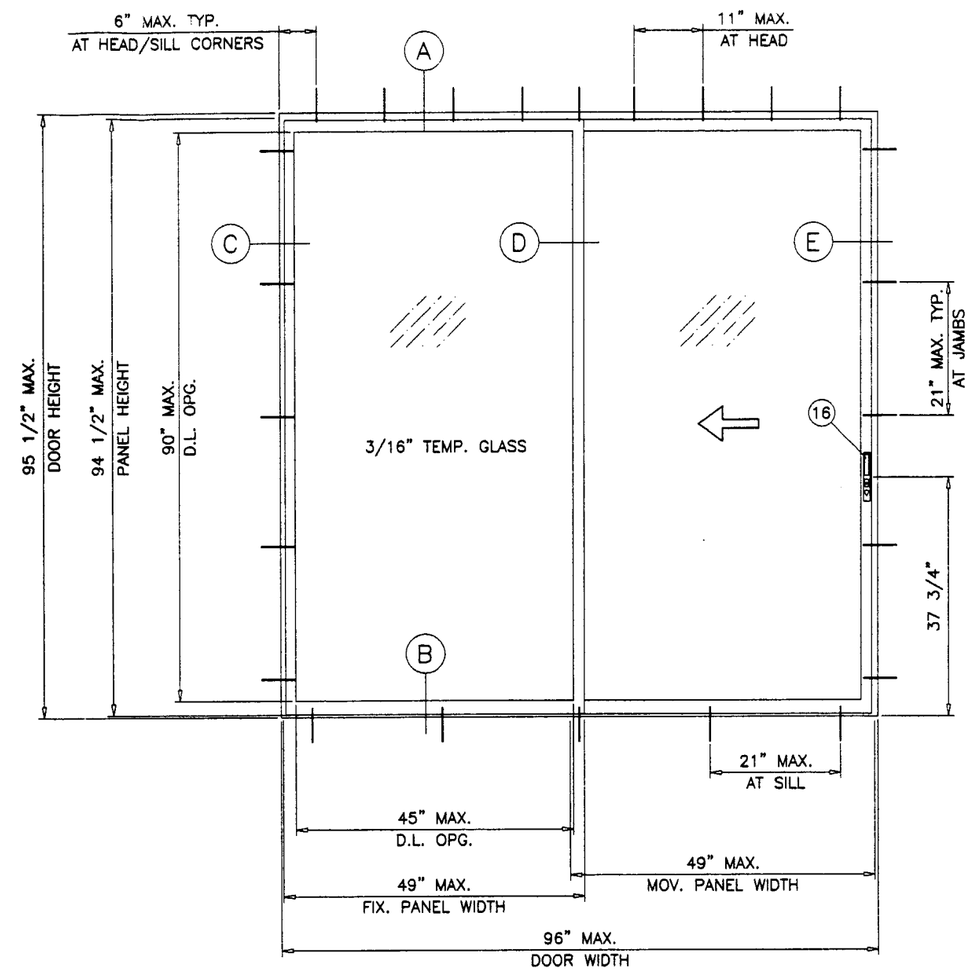

TYPICAL ELEVATION
TESTED UNIT

Engr: DR. HUMAYOUN FAROOQ
STRUCTURES
FLA. PE # 16557

SEP 0 4 200

Approved as complying with the Florida Buiding Code
Date 12/05/02
NOA# 02-0927.12
Miami Dade Product Control Division
By [signature]

AL-FAROOQ CORPORATION
ENGINEERS, PLANNERS & PRODUCT DESIGN
1235 SW 87 AVE
MIAMI, FLORIDA 33174
TEL. (305) 264-8100 FAX. (305) 262-6978
COMP-ANL\W02-74

SERIES-4000 ALUM. SLIDING GLASS DOOR

YALE OGRON MFG. CO. INC.
671 WEST 18TH ST.
HIALEAH, FL. 33010-2480
TEL (305) 887-2646 FAX (305) 883-1309

revisions:

no	date	by	description

date: 08-19-02
scale: 1/2" = 1"
dr. by: HAMID
chk. by:

drawing no.
W02-74

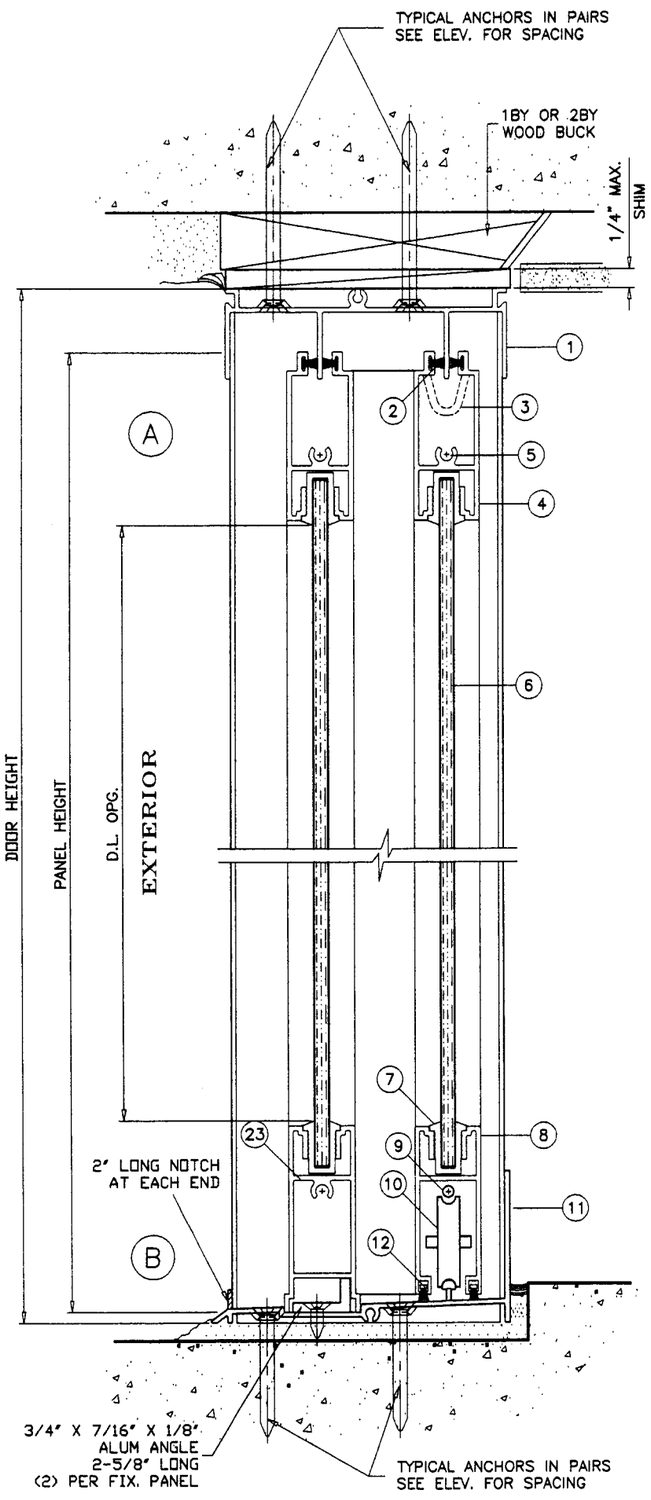

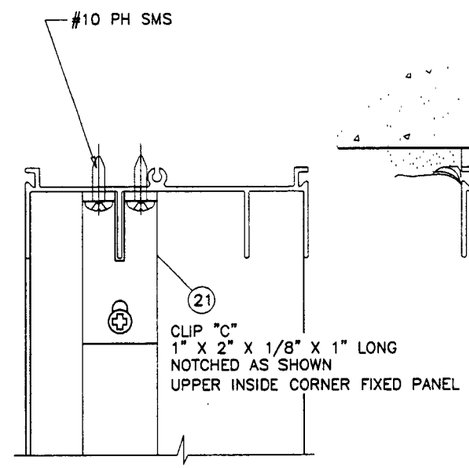

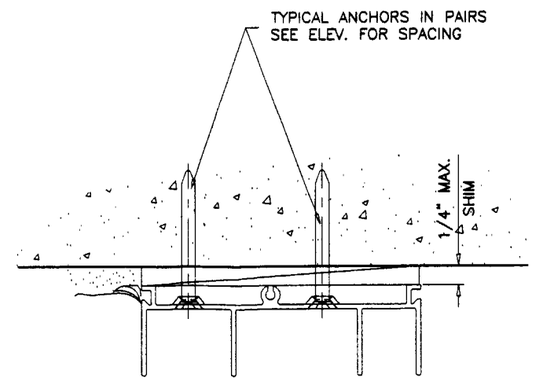

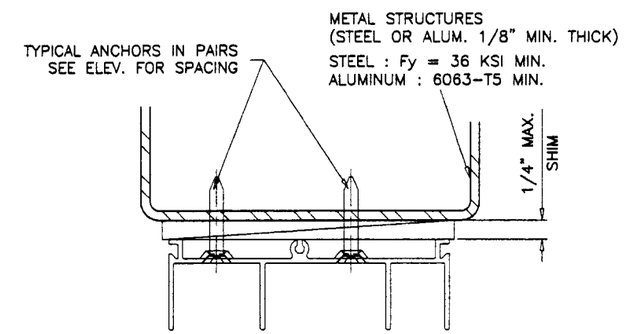

WOOD BUCKS NOT BY YALE, MUST SUSTAIN LOADS IMPOSED BY GLAZING SYSTEM AND TRANSFER THEM TO THE BUILDING STRUCTURE.

TYPICAL ANCHORS: SEE ELEV./CHART FOR SPACING

3/16" TAPCONS

INTO 2BY WOOD BUCKS OR WOOD STRUCTURE
1-3/8" MIN. PENETRATION INTO WOOD

THRU 1BY WOOD BUCKS INTO MASONRY OR DIRECTLY INTO MASONRY
1-1/4" MIN. EMBED INTO MASONRY

DIRECTLY INTO CONCRETE
1-1/2" MIN. EMBED INTO CONC.

3/16" DRILLFLEX SELF DRILLING SCREWS

INTO METAL STRUCTURES (1/8" MIN. THICKNESS)

#10 SMS

INTO APPROVED MULLIONS (NO SHIM SPACE)

SEALANTS:

ALL FRAME AND PANEL JOINTS AND HEADS OF SILL ASSEMBLY SCREWS TO BE SEALED WITH ALUMINUM COLORED SEALANT.

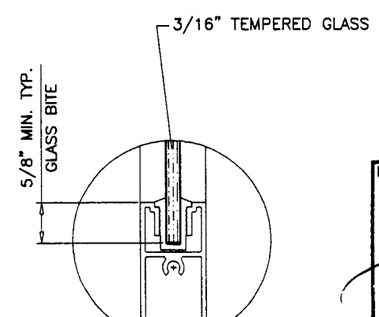

GLAZING DETAIL

Engr: DR. HUMAYOUN FAROOQ
STRUCTURES
FLA. PE # 16557

SEP 0 4 200

Approved as complying with the Florida Buiding Code
Date 12/05/02
NOA# 02-0927.12
Miami Dade Product Control Division
By

AL-FAROOQ CORPORATION
ENGINEERS, PLANNERS & PRODUCT DESIGN
1235 SW 87 AVE
MIAMI, FLORIDA 33174
TEL. (305) 264-8100 FAX. (305) 262-6978
COMP-ANL\W02-74YO

SERIES-4000 ALUM. SLIDING GLASS DOOR

YALE OGRON MFG. CO. INC.
671 WEST 18TH ST.
HIALEAH, FL. 33010-2480
TEL (305) 887-2646 FAX (305) 883-1309

revisions:			
no	date	by	description

date: 08-19-02
scale: 1/2" = 1"
dr. by: HAMID
chk. by:

drawing no.
W02-74

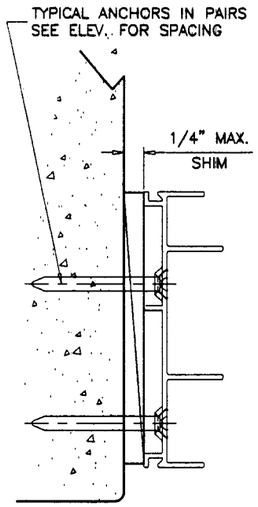

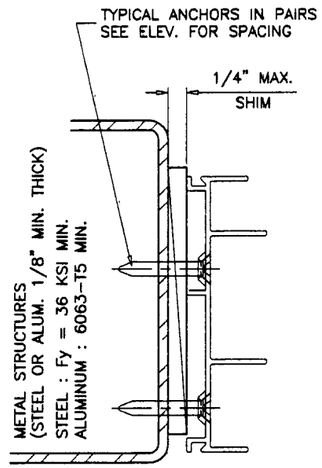

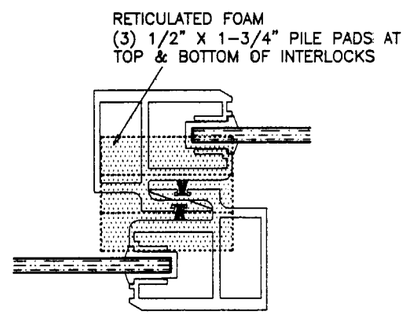

ITEM #	PART #	QUANTITY	DESCRIPTION	MATERIAL	MANF.\SUPPLIER/REMARKS
1	YE-304	1	FRAME HEAD	6063-T5	–
2	YH-4004	AS REQD.	WEATHERSTRIPPING	–	SCHLEGEL PB8322-187 OR EQUIV.
3	YH-4001	–	TOP SLIDE GUIDE	NYLON	6/6 SECURITY PLASTICS INC.
4	YE-307	1/ PANEL	PANEL TOP RAIL	6063-T5	–
5	YF-31	1/ CORNER	TOP RAIL ASSY. SCREW	–	#10 X 1" PH SMS
6	–	2	PANEL GLASS	–	3/16" TEMPERED
7	YE-4007	AS REQD.	GLAZING BEAD	VINYL	CUSTOM PLASTICS 026-8 OR EQUIV.
8	YE-306	–	MOVING PANEL BOTTOM RAIL	6063-T5	–
9	YF-27A	1/ CORNER	BOTTOM RAIL ASSY. SCREW	–	#10-32 X 7/8" PH. MACH. SCREW
10	YH-4031	2/ MOV. PANEL	ROLLER ASSEMBLY	–	ALUM HOUSING WITH STEEL WHEEL
11	YE-353	1	FRAME SILL	6063-T5	–
12	YH-4005	AS REQD.	ROLLING PANEL SILL W'STRIPPING	–	SCHLEGEL SK1004-510 OR EQUIV.
13	YE-303	2	FRAME JAMB	6063-T5	–
14	YE-377	3/ FIX. PANEL	FIXED PANEL CLIP	6063-T5	2" LONG,
15	YE-325	2	PANEL HEAVY INTERLOCK STILE	6063-T5	–
16	YH-4015/16	1	LOCK ASSY. WITH LATCH MECHANISM	–	PLATED OR PAINTED ZAMAK WITH STEEL CAM
17	YH-4010	AS REQD.	FIXED END STILE W'STRIPPING	VINYL	CUSTOM PLASTICS 042-1
18	–	AS REQD.	SCREEN	–	OPTIONAL
19	YH-4034	–	BRACKET TYPE 'B'	ALUMINUM	–
20	YF-28	1/ CORNER	FRAME ASSY. SCREW	–	#8 X 1" SMS
21	YH-4055	–	FIXED PANEL UPPER CLIP	6063-T5	TYPE 'C'
22	YE-301	1/ PANEL	PANEL HEAVY LOCKING STILE	6063-T5	–
23	YE-379	1	FIXED PANEL BOTTOM RAIL	6063-T5	–
24	YE-302	1	FIXED END STILE	6063-T5	–

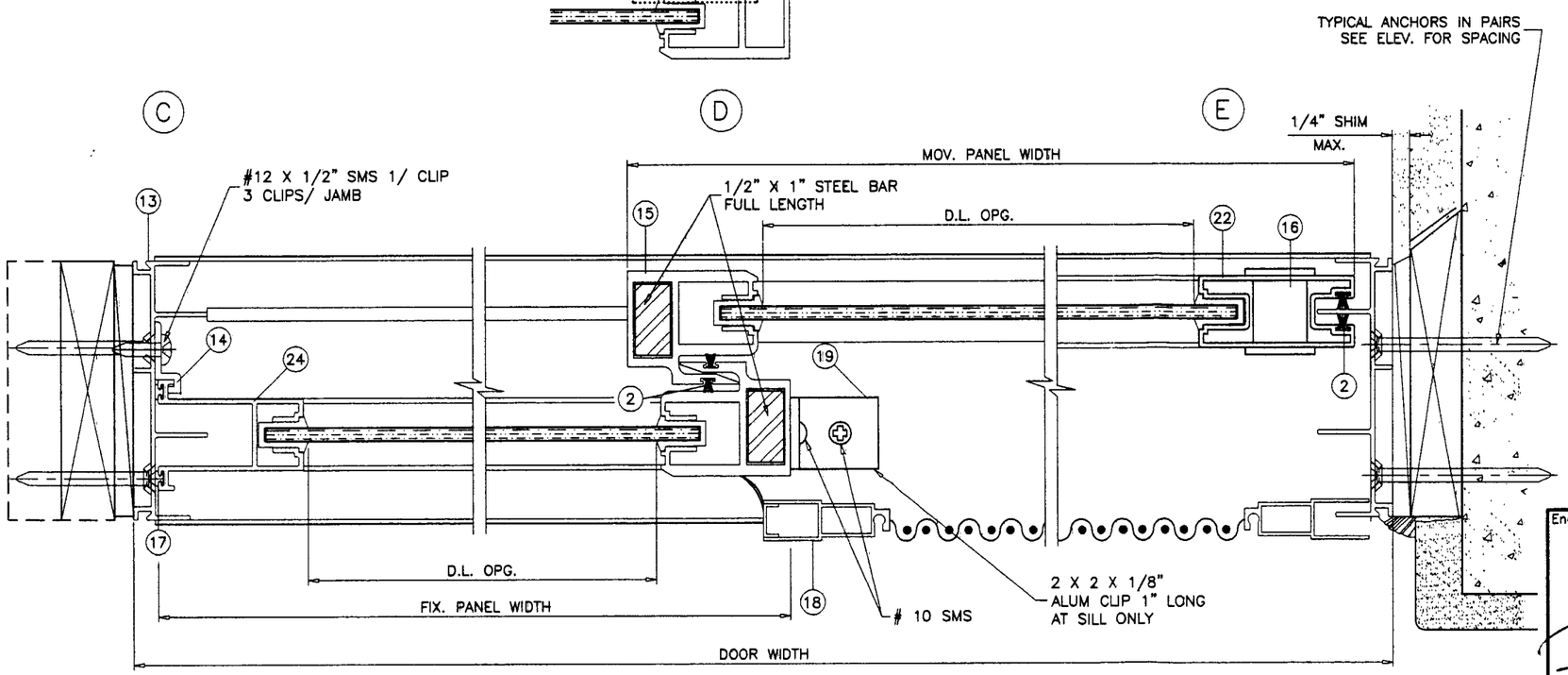

EXTERIOR

Engr: DR. HUMAYOUN FAROOQ
STRUCTURES
FLA. PE # 16557

SEP 0 4 200

Approved as complying with the
Florida Buiding Code
Date 12/05/02
NOA# 02-0927.12
Miami Dade Product Control
Division
By

AL-FAROOQ CORPORATION
ENGINEERS, PLANNERS & PRODUCT DESIGN
1235 SW 87 AVE
MIAMI, FLORIDA 33174
TEL. (305) 264-8100 FAX. (305) 262-6978
COMP-ANL\W02-74(1)

SERIES-4000 ALUM. SLIDING GLASS DOOR

YALE OGRON MFG. CO. INC.
671 WEST 18TH ST.
HIALEAH, FL. 33010-2480
TEL. (305) 887-2646 FAX (305) 883-1309

revisions:

no	date	by	description

date: 08-19-02
scale: 1/2" = 1"
dr. by: HAMID
chk. by:

drawing no.
W02-74

sheet 3 of 4

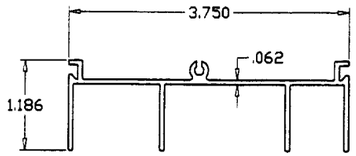

FRAME HEAD
YE-304
6063-T5

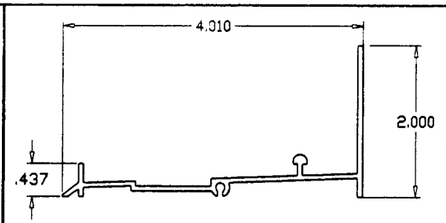

FRAME SILL
YE-353
6063-T5

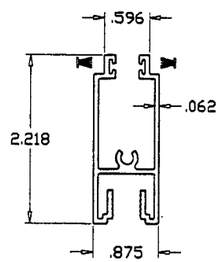

PANEL TOP RAIL
YE-307
6063-T5

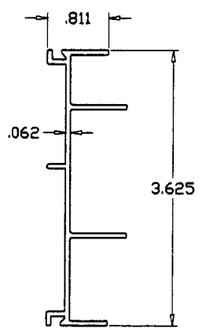

FRAME JAMB
YE-303
6063-T5

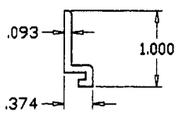

FIXED PANEL CLIP
YE-377
6063-T5

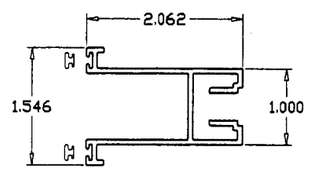

FIXED END STILE
YE-302
6063-T5

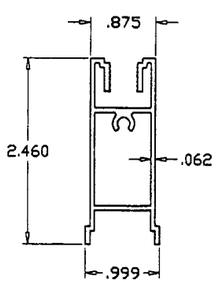

FIXED PANEL BOTTOM RAIL
YE-379
6063-T5

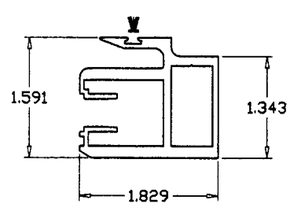

PANEL HEAVY INTERLOCK STILE
YE-325
6063-T5

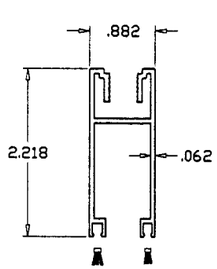

MOVING PANEL BOTTOM RAIL
YE-306
6063-T5

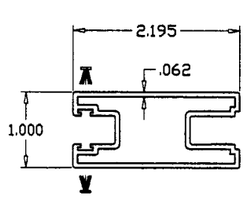

PANEL HEAVY LOCKING STILE
YE-301
6063-T5

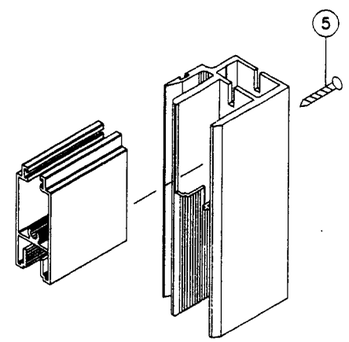

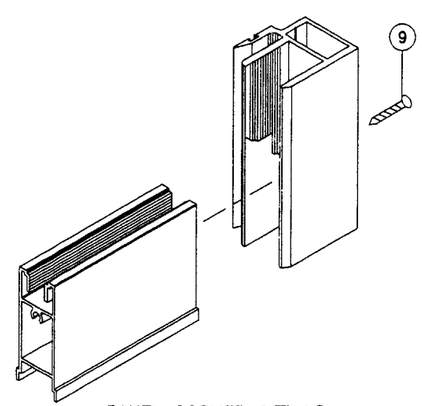

PANEL CORNER DETAILS

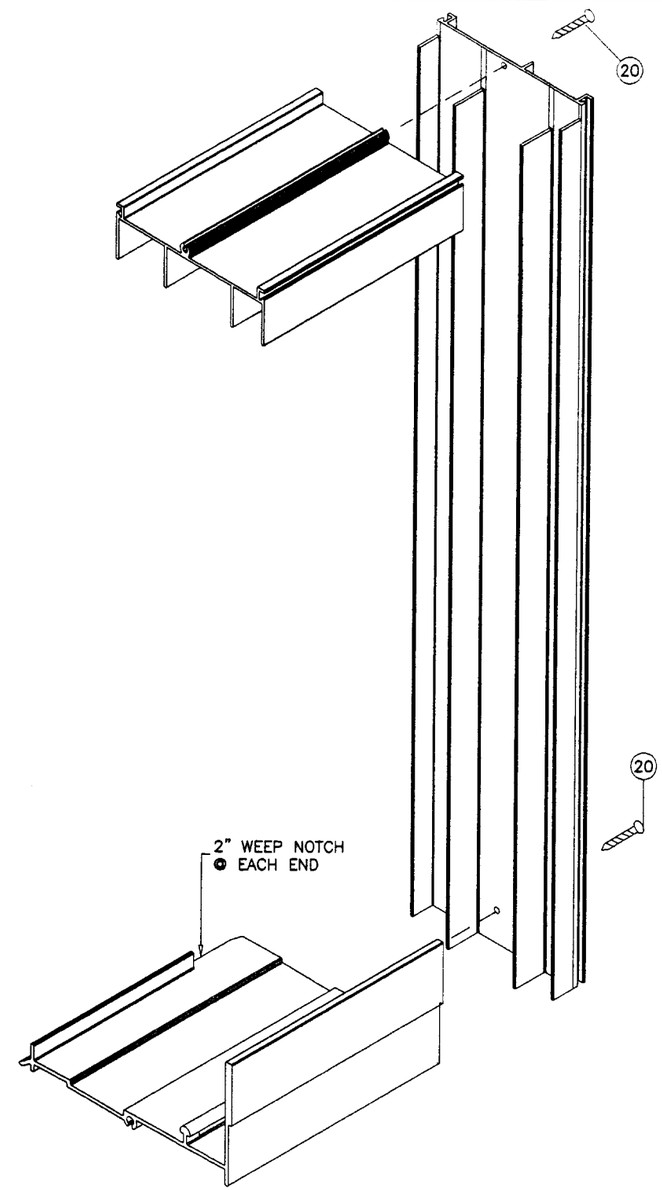

FRAME CORNER DETAIL

Engr: DR. HUMAYOUN FAROOQ
STRUCTURES
FLA. PE # 16557

SEP 0 4 200

Approved as complying with the
Florida Buiding Code
Date 12/05/02
NOA# 02-0927.12
Miami Dade Product Control
Division
By: Theodore Kerner

AL-FAROOQ CORPORATION
ENGINEERS, PLANNERS & PRODUCT DESIGN
1235 SW 87 AVE
MIAMI, FLORIDA 33174
TEL. (305) 264-8100 FAX. (305) 262-6978

COMP-ANL\W02-74YO

SERIES-4000 ALUM. SLIDING GLASS DOOR

YALE OGRON MFG. CO. INC.
671 WEST 18TH ST.
HIALEAH, FL. 33010-2480
TEL. (305) 887-2646 FAX (305) 883-1309

revisions:

no	date	by	description

date: 08-19-02
scale: 1/2" = 1"
dr. by: HAMID
chk. by:

drawing no.
W02-74

sheet 4 of 4