MIAMI-DADE

BUILDING CODE COMPLIANCE OFFICE (BCCO)
PRODUCT CONTROL DIVISION

MIAMI-DADE COUNTY, FLORIDA
METRO-DADE FLAGLER BUILDING
140 WEST FLAGLER STREET, SUITE 1603
MIAMI, FLORIDA 33130-1563
(305) 375-2901 FAX (305) 375-2908

NOTICE OF ACCEPTANCE (NOA)

M.Q. Windows, Inc.
1855 Griffin Road, Suite A-274
Dania, FL 33004

SCOPE:
This NOA is being issued under the applicable rules and regulations governing the use of construction materials. The documentation submitted has been reviewed by Miami-Dade County Product Control Division and accepted by the Board of Rules and Appeals (BORA) to be used in Miami Dade County and other areas where allowed by the Authority Having Jurisdiction (AHJ).

This NOA shall not be valid after the expiration date stated below. The Miami-Dade County Product Control Division (In Miami Dade County) and/or the AHJ (in areas other than Miami Dade County) reserve the right to have this product or material tested for quality assurance purposes. If this product or material fails to perform in the accepted manner, the manufacturer will incur the expense of such testing and the AHJ may immediately revoke, modify, or suspend the use of such product or material within their jurisdiction. BORA reserves the right to revoke this acceptance, if it is determined by Miami-Dade County Product Control Division that this product or material fails to meet the requirements of the applicable building code.

This product is approved as described herein, and has been designed to comply with the High Velocity Hurricane Zone of the Florida Building Code.

DESCRIPTION: Series JS Steel Reinforced Unclipped Mullion

APPROVAL DOCUMENT: Drawing No. **MQJS-NOA1**, titled "JS Series Unclipped Mullion Miami Dade County", sheets 1 through 9 of 9, dated 01/10/99 and revised on 07/14/01, prepared by manufacturer, signed and sealed by Walter A. Tillit, Jr., P.E., bearing the Miami-Dade County Product Control Revision Stamp with the Notice of Acceptance number and expiration date by the Miami-Dade County Product Control Division.

MISSILE IMPACT RATING: Large and Small Missile Impact

LABELING: Each unit shall bear a permanent label with the manufacturer's name or logo, city, state and following statement: "Miami-Dade County Product Control Approved", unless otherwise noted herein.

RENEWAL of this NOA shall be considered after a renewal application has been filed and there has been no change in the applicable building code negatively affecting the performance of this product.

TERMINATION of this NOA will occur after the expiration date or if there has been a revision or change in the materials, use, and/or manufacture of the product or process. Misuse of this NOA as an endorsement of any product, for sales, advertising or any other purposes shall automatically terminate this NOA. Failure to comply with any section of this NOA shall be cause for termination and removal of NOA.

ADVERTISEMENT: The NOA number preceded by the words Miami-Dade County, Florida, and followed by the expiration date may be displayed in advertising literature. If any portion of the NOA is displayed, then it shall be done in its entirety.

INSPECTION: A copy of this entire NOA shall be provided to the user by the manufacturer or its distributors and shall be available for inspection at the job site at the request of the Building Official.
This NOA consists of this page 1 as well as approval document mentioned above.
The submitted documentation was reviewed by **Manuel Perez, P.E.**

PRODUCT CONTROL ACCEPTED

M.Q. Windows, Inc.

NOTICE OF ACCEPTANCE: EVIDENCE SUBMITTED

(For File ONLY. Not part of NOA)

A. DRAWINGS

1. Manufacturer's die drawings and sections.
2. Drawing No **MQJS-NOA1**, Sheets 1 through 9 of 9, titled "JS Series Unclipped Mullion Miami Dade County", prepared by manufacturer, dated 01/10/99 revised on 07/14/01, signed and sealed by Walter A. Tillit, Jr., P.E.

B. TESTS

1. Test reports on 1) Air Infiltration Test, per SFBC, PA 202-94
   2) Uniform Static Air Pressure Test, Loading per SFBC PA 202-94
   3) Water Resistance Test, per SFBC, PA 202-94
   4) Large Missile Impact Test per SFBC, PA 201-94
   5) Cyclic Wind Pressure Loading per SFBC, PA 203-94
   6) Forced Entry Test, per SFBC 3603.2 (b) and PA 202-94

   along with marked-up drawings and installation diagram of mulled JS series wood doors and windows, prepared by Hurricane Test Laboratory, Inc., Test Report No. **HTL-0118-1103-98**, dated from 11/04/98 to 11/17/98, signed and sealed by Timothy S. Marshall, P.E.
2. Test reports on 1) Large Missile Impact Test per SFBC, PA 201-94
   2) Cyclic Wind Pressure Loading per SFBC, PA 203-94

   along with marked-up drawings and installation diagram of mulled JS series wood doors and windows, prepared by Hurricane Test Laboratory, Inc., Test Report No. **HTL-0118-1106-98**, dated from 10/15/98 to 11/12/98, signed and sealed by Timothy S. Marshall, P.E.
3. Test reports on 1) Large Missile Impact Test per SFBC, PA 201-94
   2) Cyclic Wind Pressure Loading per SFBC, PA 203-94

   along with marked-up drawings and installation diagram of mulled JS series wood doors and windows, prepared by Hurricane Test Laboratory, Inc., Test Report No. **HTL-0118-1218-98**, dated from 01/05/99 to 01/06/99, signed and sealed by Timothy S. Marshall, P.E.

C. CALCULATIONS

1. Anchor Calculations and structural analysis, prepared by Tilteco, Inc., dated 01/10/99 and revised on 06/26/02, signed and sealed by Walter A. Tillit, Jr., P.E.

D. MATERIAL CERTIFICATIONS

1. None

Manuel Perez, P.E.
Product Control Examiner
NOA No 02-1018.02
Expiration Date: December 19, 2007
Approval Date: December 19, 2002

M.Q. Windows, Inc.

NOTICE OF ACCEPTANCE: EVIDENCE SUBMITTED

(For File ONLY. Not part of NOA)

E. STATEMENTS

1. Statement letter of conformance, dated November 24, 1999, signed and sealed by Walter A. Tillit, Jr., P.E.
2. Statement letter of no financial interest, dated November 25, 1999, signed and sealed by Sylvain Marcotte, Design Engineer, M.Q. Windows, Inc..

F. OTHER

1. None.

Manuel Perez, P.E.
Product Control Examiner
NOA No 02-1018.02
Expiration Date: December 19, 2007
Approval Date: December 19, 2002

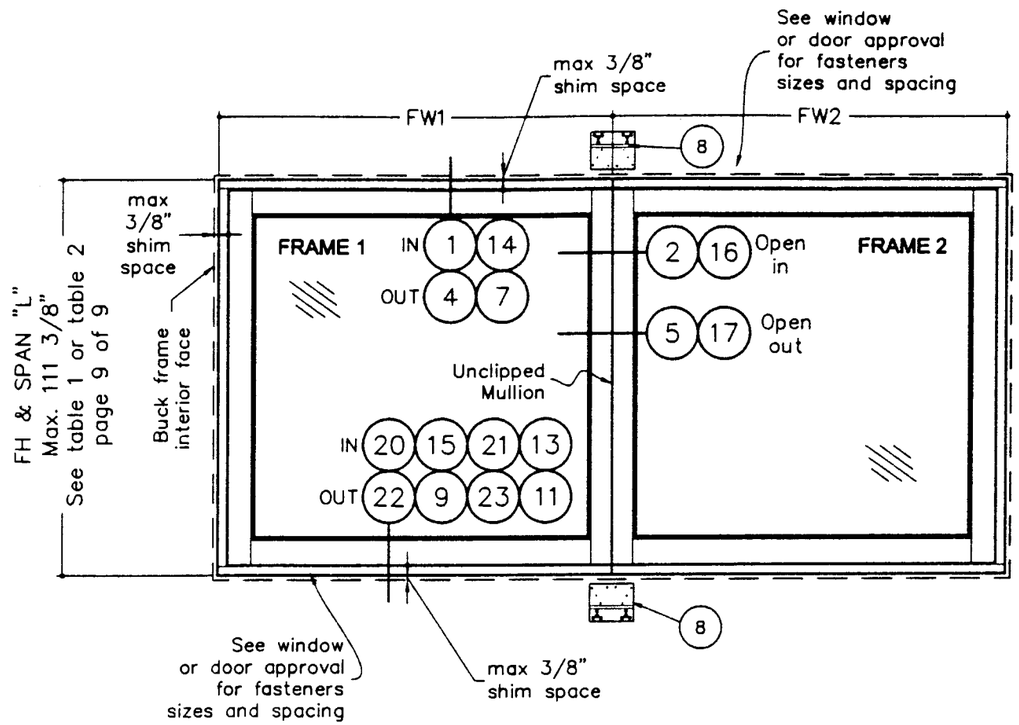

DESIGN PRESSURE
Positive Pressure: +58 psf Negative Pressure −68 psf
NOTE: All sizes noted are maximum sizes. Sizes smaller in width & height are permitted.
NOTE: This unit will not need a hurricane protective system.

UNCLIPPED MULLION VERTICAL INSTALLATION INSIDE/OUTSIDE CONFIGURATION

VIEWED FROM THE OUTSIDE
WOOD: Mahogany

LEGEND:

FW: FRAME SIZE, WIDTH
FH: FRAME SIZE, HEIGHT

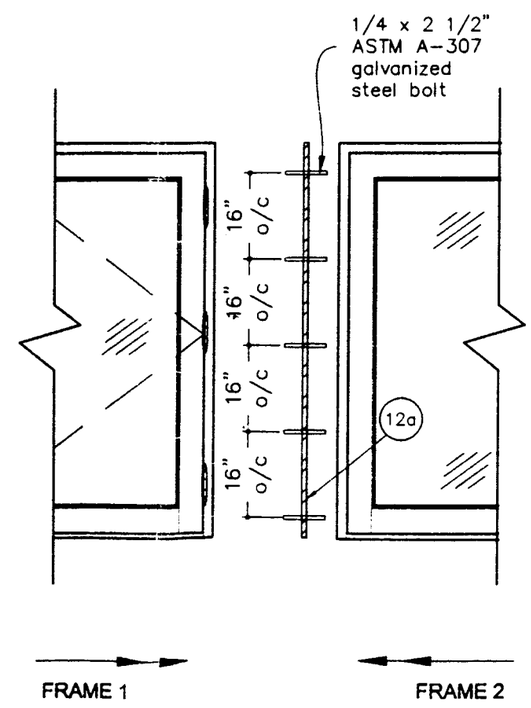

BRACKET CONNECTIONS:

Installation Bracket PDF-JSMI-05D for inswing; PDF-JSMO-05D for outswing

CONNECTION TO THE WINDOW /DOOR FRAME:

AT HEAD DETAILS NO 1, 14 & 4, 7;
AT SILL, DETAILS NO 20, 15 & 22, 9:
Screwed to the WOOD FRAME using 6x #10 x 1" wood screws. Min. embedment is 7/8"; and 2x #12 x 1 3/4" FH wood screw. Min. embedment is 1 1/2".

AT SILL DETAILS NO 21, 13 & 23, 11:
Screwed to the aluminum or bronze threshold using 6x 10-24 x 5/8" sheet metal screws.

CONNECTION TO THE STRUCTURE

2 x PT WOOD BUCK:

Screwed to the BUCK FRAME using 6x #12 x 1 1/2" wood screws. Min. embedment is 1 1/4".

1 x PT WOOD BUCK:

Screwed to the MASONRY using 3 x 1/4"ø x 2 1/4" SS410 Tapcon screws. Min. embedment is 1 1/4". Min. edge distance is 3".

MAXIMUM SHIM SPACE: 3/8"

THESE INSTALLATION PATTERNS APPLIES TO THE MULLION CONNECTIONS TO THE BUILDING ONLY

MQ WINDOWS OF EUROPE AND THE AMERICAS
1855 GRIFFIN ROAD, SUITE A-274
DANIA, FL 33004

JS SERIE UNCLIPPED MULLION

MIAMI DADE COUNTY

Drawing no.: MQJS-NOA1	
Scale: NONE	Drawn by: S. Marcotte
Date drawn: 01/10/99	Date revised: 07/14/01
File: DJS-M9801	Page: 1/ 9

STRUCTURALLY REVIEWED BY:

TILLECO INC.
TILLIT TESTING & ENGINEERING COMPANY
6595 NW 36th STREET, STE. 217
MIAMI, FLORIDA 33166

WALTER A. TILLIT JR., P.E.
STRUCTURAL ENGINEER
FL. LIC.NO. 44167
9/11/02

Approved as complying with the Florida Buiding Code
Date DEC. 19, 2002
NOA# 02-1018.02
Miami Dade Product Control Division
By Manuel Perez

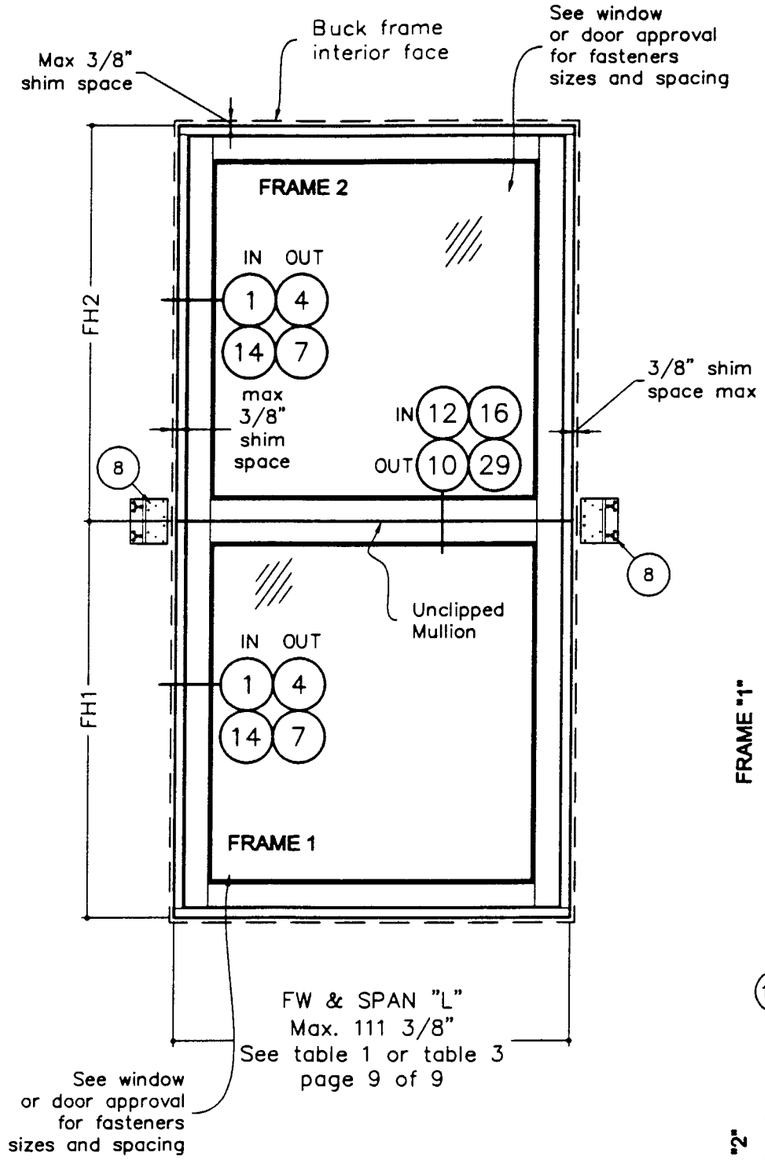

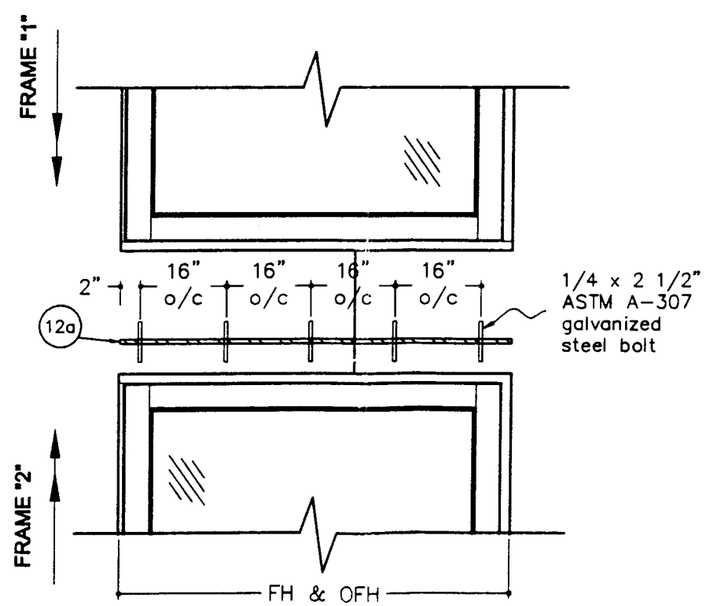

DESIGN PRESSURE
Positive Pressure: +58 psf Negative Pressure −68 psf
NOTE: All sizes noted are maximum sizes. Sizes smaller in width & height are permitted.
NOTE: This unit will not need a hurricane protective system.

UNCLIPPED MULLION HORIZONTAL INSTALLATION INSIDE/OUTSIDE CONFIGURATION

VIEWED FROM THE OUTSIDE
WOOD: Mahogany

LEGEND:
FW: FRAME SIZE, WIDTH
FH: FRAME SIZE, HEIGHT

BRACKET CONNECTIONS:

Installation Bracket PDF-JSMI-05D for inswing; PDF-JSMO-05D for outswing

CONNECTION TO THE WINDOW /DOOR FRAME:

AT JAMBS DETAILS NO 1, 14 & 4, 7;
Screwed to the WOOD FRAME using 6x #10 x 1" wood screws. Min. embedment is 7/8"; and 2x #12 x 1 3/4" FH wood screw. Min. embedment is 1 1/2".

CONNECTION TO THE STRUCTURE

2 x PT WOOD BUCK:

Screwed to the BUCK FRAME using 6x #12 x 1 1/2" wood screws. Min. embedment is 1 1/4".

1 x PT WOOD BUCK:

Screwed to the MASONRY using 3 x 1/4"ø x 2 1/4" SS410 Tapcon screws. Min. embedment is 1 1/4". Min. edge distance is 3".

MAXIMUM SHIM SPACE: 3/8"

THESE INSTALLATION PATTERNS APPLIES TO THE MULLION CONNECTIONS TO THE BUILDING ONLY

MQ WINDOWS OF EUROPE AND THE AMERICAS
1855 GRIFFIN ROAD, SUITE A-274
DANIA, FL 33004

JS SERIE
UNCLIPPED MULLION
MIAMI DADE COUNTY

Drawing no.: MQJS-NOA1	
Scale: NONE	Drawn by: S. Marcotte
Date drawn: 01/10/99	Date revised: 07/14/01
File: DJS-M9802	Page: 2/ 9

STRUCTURALLY REVIEWED BY:

TILLECO INC.
TILLIT TESTING & ENGINEERING COMPANY
6595 NW 36th STREET, STE. 217
MIAMI, FLORIDA 33166

WALTER A. TILLIT JR., P.E.
STRUCTURAL ENGINEER
FL. LIC.NO. 41167

9/14/02

Approved as complying with the Florida Buiding Code
Date DEC 19, 2002
NOA# 02-1018.02
Miami Dade Product Control Division
By

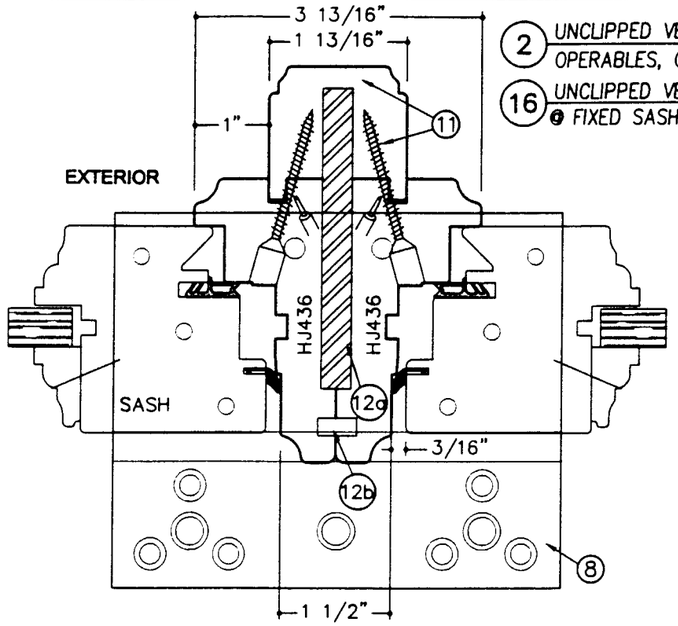

(2) UNCLIPPED VERTICAL MULLION
OPERABLES, OPEN IN

(16) UNCLIPPED VERTICAL MULLION
@ FIXED SASH OPEN IN (SIM)

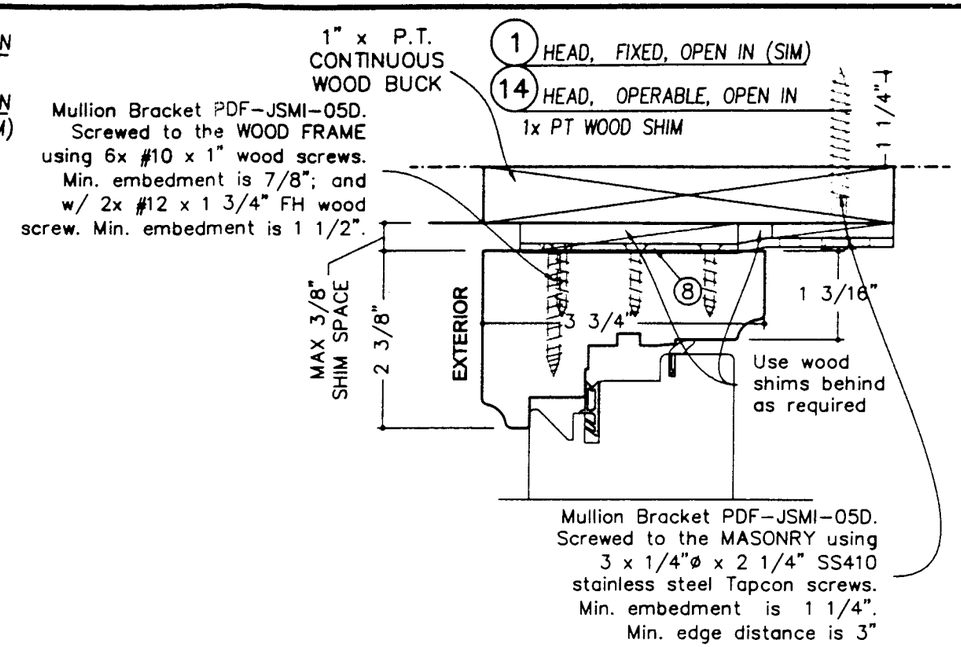

(1) HEAD, FIXED, OPEN IN (SIM)

(14) HEAD, OPERABLE, OPEN IN

UNCLIPPED VERTICAL MULLION,
OPEN IN CONFIGURATION

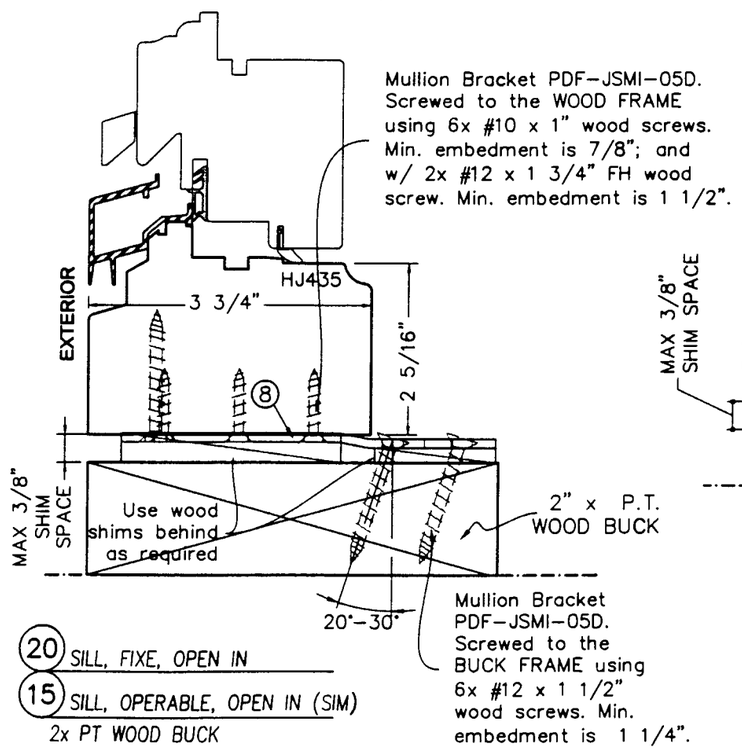

(20) SILL, FIXE, OPEN IN

(15) SILL, OPERABLE, OPEN IN (SIM)

2x PT WOOD BUCK

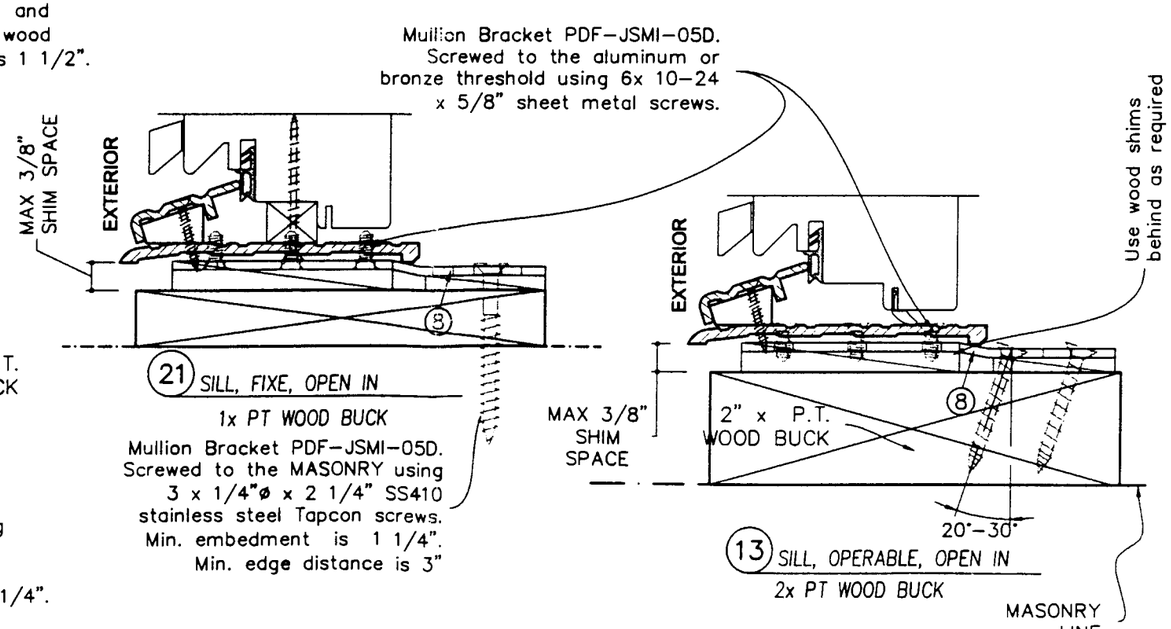

(21) SILL, FIXE, OPEN IN

1x PT WOOD BUCK

Mullion Bracket PDF-JSMI-05D.
Screwed to the MASONRY using
3 x 1/4"ø x 2 1/4" SS410
stainless steel Tapcon screws.
Min. embedment is 1 1/4".
Min. edge distance is 3"

(13) SILL, OPERABLE, OPEN IN

2x PT WOOD BUCK

NOTE: Clear "Spectrem 2" silicone sealant at shown interfaces

(#) NUMBERS ARE REFERRING TO THE ASSEMBLY LISTS ON PAGES 7 TO 8

MQ WINDOWS OF EUROPE AND THE AMERICAS
1855 GRIFFIN ROAD,
SUITE A-274
DANIA, FL 33004

JS SERIE
UNCLIPPED MULLION
MIAMI DADE COUNTY

Drawing no.: MQJS-NOA1	
Scale: NONE	Drawn by: S. Marcotte
Date drawn: 01/10/99	Date revised: 07/14/01
File: DJS-M9803	Page: 3 /9

STRUCTURALLY REVIEWED BY:

TILLECO INC.
TILLIT TESTING & ENGINEERING COMPANY
6595 NW 36th STREET, STE. 217
MIAMI, FLORIDA 33166

WALTER A. TILLIT JR., P.E.
STRUCTURAL ENGINEER
FL. LIC.NO. 44167
9/4/02

Approved as complying with the Florida Buiding Code
Date DEC. 19, 2002
NOA# 02-1018.02
Miami Dade Product Control Division
By Manuel Perez

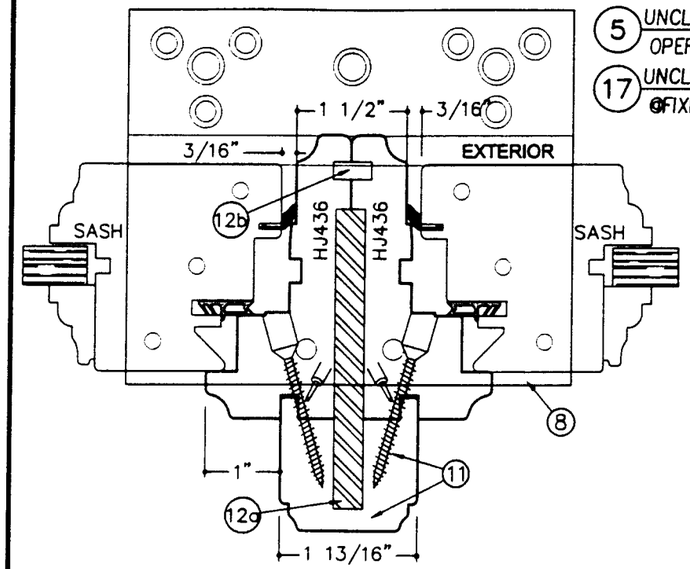

(5) UNCLIPPED VERTICAL MULLION OPERABLES, OPEN OUT

(17) UNCLIPPED VERTICAL MULLION @FIXED (SIM), OPEN OUT

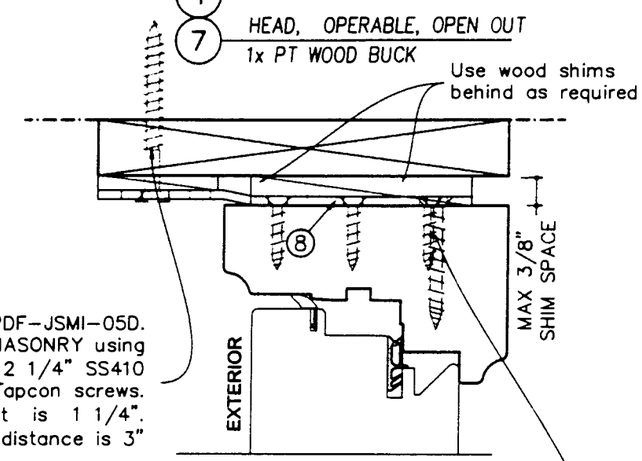

(4) HEAD, FIXED, OPEN OUT (SIM)

(7) HEAD, OPERABLE, OPEN OUT
1x PT WOOD BUCK

Mullion Bracket PDF-JSMI-05D. Screwed to the MASONRY using 3 x 1/4"ø x 2 1/4" SS410 stainless steel Tapcon screws. Min. embedment is 1 1/4". Min. edge distance is 3"

Mullion Bracket PDF-JSMI-05D. Screwed to the WOOD FRAME using 6x #10 x 1" wood screws. Min. embedment is 7/8"; and w/ 2x #12 x 1 3/4" FH wood screw. Min. embedment is 1 1/2".

UNCLIPPED VERTICAL MULLION, OPEN OUT CONFIGURATION

Mullion Bracket PDF-JSMI-05D. Screwed to the WOOD FRAME using 6x #10 x 1" wood screws. Min. embedment is 7/8"; and w/ 2x #12 x 1 3/4" FH wood screw. Min. embedment is 1 1/2".

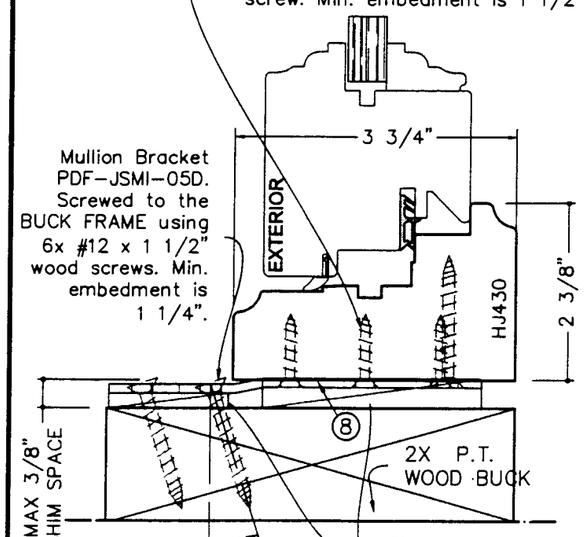

Mullion Bracket PDF-JSMI-05D. Screwed to the BUCK FRAME using 6x #12 x 1 1/2" wood screws. Min. embedment is 1 1/4".

(22) SILL, FIXE, OPEN OUT (SIM)

(9) SILL, OPERABLE, OPEN OUT
2x PT WOOD BUCK

Mullion Bracket PDF-JSMI-05D. Screwed to the aluminum or bronze threshold using 6x 10-24 x 5/8" sheet metal screws.

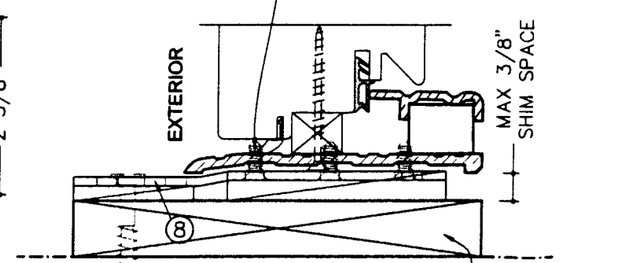

(23) SILL, FIXE, OPEN OUT
1x PT WOOD BUCK

1" x P.T. CONTINUOUS WOOD BUCK

Mullion Bracket PDF-JSMI-05D. Screwed to the MASONRY using 3 x 1/4"ø x 2 1/4" SS410 stainless steel Tapcon screws. Min. embedment is 1 1/4". Min. edge distance is 3"

Mullion Bracket PDF-JSMI-05D. Screwed to the BUCK FRAME using 6x #12 x 1 1/2" wood screws. Min. embedment is 1 1/4".

Mullion Bracket PDF-JSMI-05D. Screwed to the aluminum or bronze threshold using 6x 10-24 x 5/8" sheet metal screws.

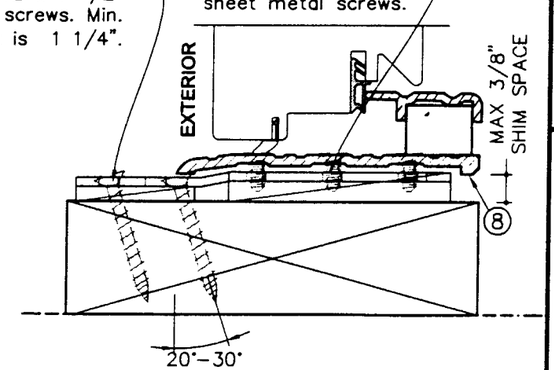

(11) SILL, OPERABLE, OPEN OUT
2x PT WOOD BUCK

NOTE: Clear "Spectrem 2" silicone sealant at shown interfaces

(#) NUMBERS ARE REFERRING TO THE ASSEMBLY LISTS ON PAGES 7 TO 8

MQ WINDOWS OF EUROPE AND THE AMERICAS
1855 GRIFFIN ROAD, SUITE A-274
DANIA, FL 33004

JS SERIE
UNCLIPPED MULLION
MIAMI DADE COUNTY

Drawing no.: MQJS-NOA1	
Scale: NONE	Drawn by: S. Marcotte
Date drawn: 01/10/99	Date revised: 07/14/01
File: DJS-M9804	Page: 4 /9

STRUCTURALLY REVIEWED BY:

TILLECO INC.
TILLIT TESTING & ENGINEERING COMPANY
6595 NW 36th STREET, STE. 217
MIAMI, FLORIDA 33166
WALTER A. TILLIT JR., P.E.
STRUCTURAL ENGINEER
FL. LIC.NO. 44167
9/14/02

Approved as complying with the Florida Buiding Code
Date DEC. 19, 2002
NOA# 02-1018.02
Miami Dade Product Control Division
By Manuel Perez

UNCLIPPED HORIZONTAL MULLION, OPEN IN CONFIGURATION

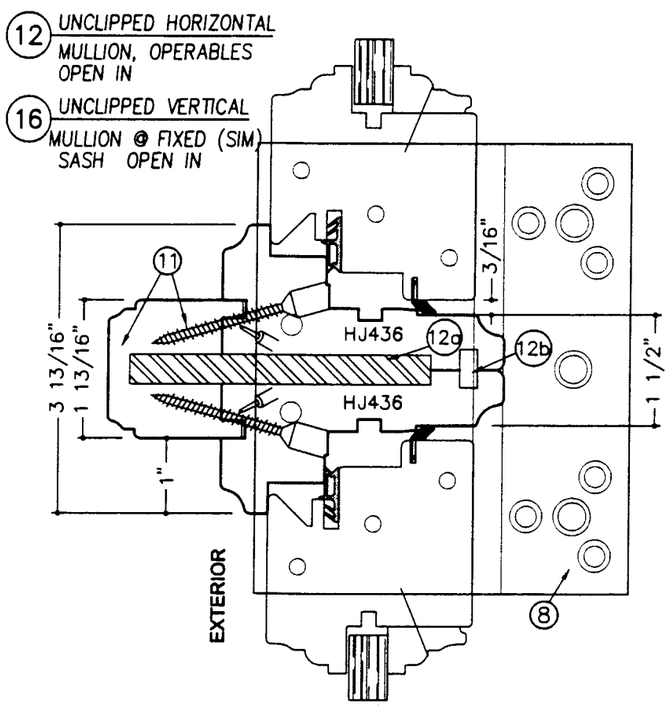

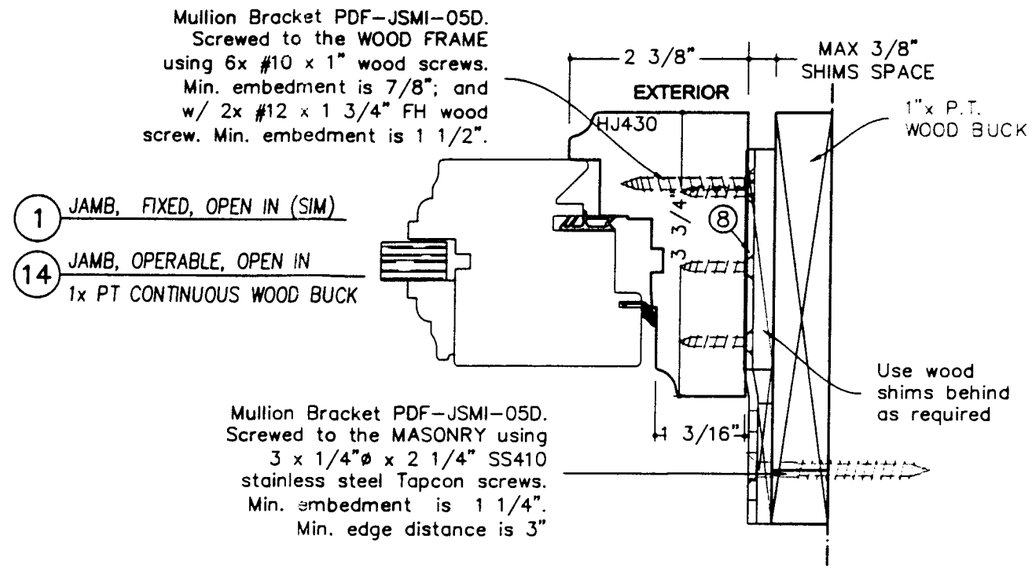

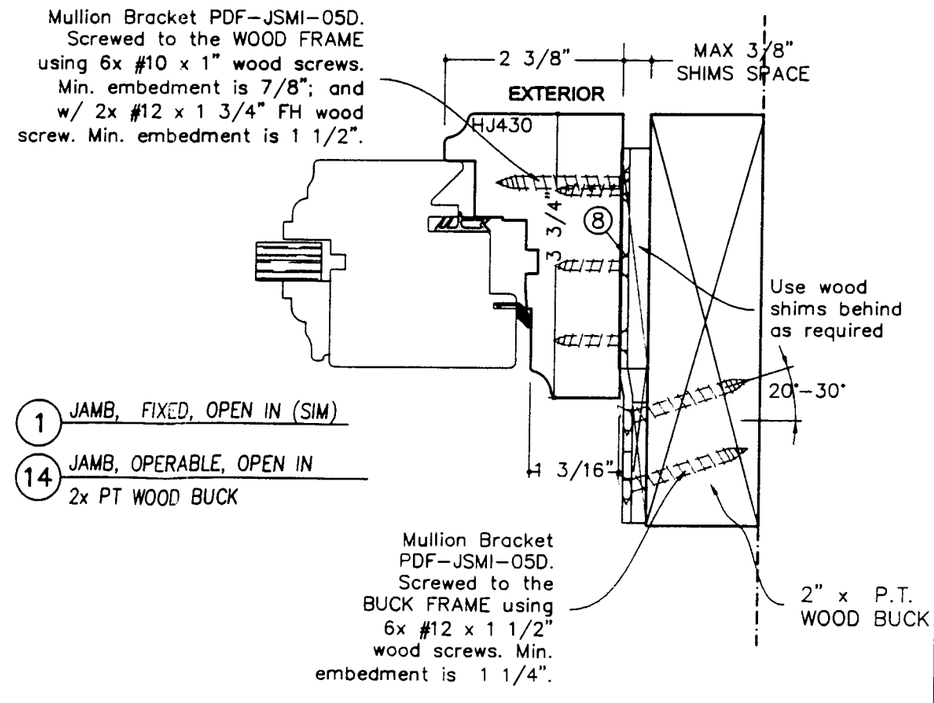

(#) NUMBERS ARE REFERRING TO THE ASSEMBLY LISTS ON PAGES 7 TO 8

NOTE: Clear "Spectrem 2" silicone sealant at shown interfaces

MQ WINDOWS OF EUROPE AND THE AMERICAS
1855 GRIFFIN ROAD, SUITE A-274
DANIA, FL 33004

JS SERIE
UNCLIPPED MULLION
MIAMI DADE COUNTY

Drawing no.: MQJS-NOA1	
Scale: NONE	Drawn by: S. Marcotte
Date drawn: 01/10/99	Date revised: 07/14/01
File: DJS-M9805	Page: 5 /9

STRUCTURALLY REVIEWED BY:

TILLECO INC.
TILLIT TESTING & ENGINEERING COMPANY
6595 NW 36th STREET, STE. 217
MIAMI, FLORIDA 33166
WALTER A. TILLIT JR., P.E.
STRUCTURAL ENGINEER
FL. LIC.NO. 44167
9/11/02

Approved as complying with the Florida Buiding Code
Date DEC. 19, 2002
NOA# 02-1018.02
Miami Dade Product Control Division
By Manuel Perez

UNCLIPPED HORIZONTAL MULLION, OPEN OUT CONFIGURATION

(10) UNCLIPPED HORIZONTAL MULLION, OPERABLES OPEN OUT

(29) UNCLIPPED VERTICAL MULLION @ FIXED (SIM) SASH OPEN OUT

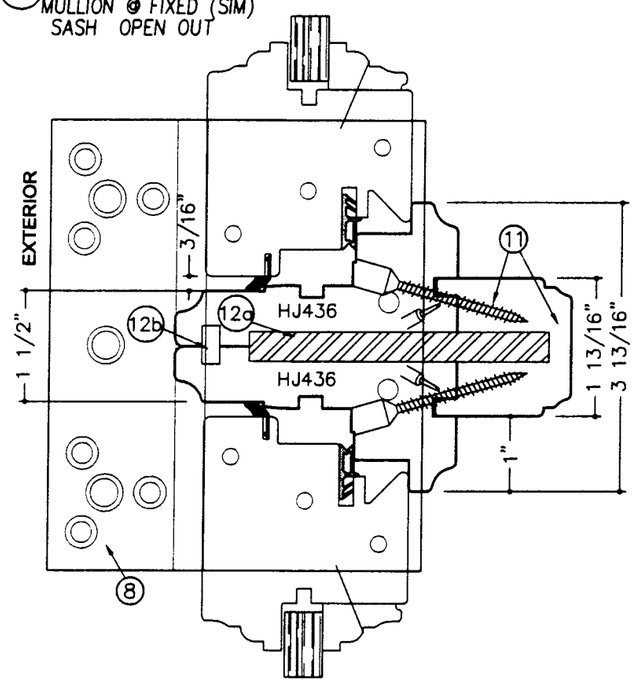

Mullion Bracket PDF-JSMI-05D. Screwed to the MASONRY using 3 x 1/4"ø x 2 1/4" SS410 stainless steel Tapcon screws. Min. embedment is 1 1/4". Min. edge distance is 3".

(4) JAMB, FIXED, OPEN OUT (SIM)

(7) JAMB, OPERABLE, OPEN OUT 1x PT CONTINUOUS WOOD BUCK

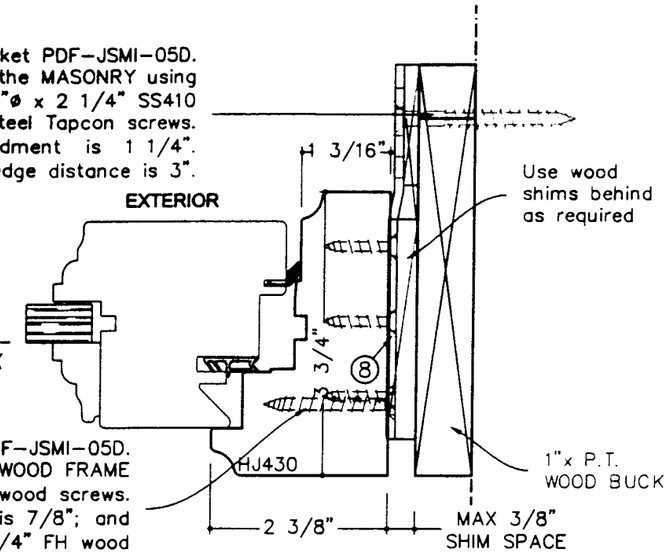

Mullion Bracket PDF-JSMI-05D. Screwed to the WOOD FRAME using 6x #10 x 1" wood screws. Min. embedment is 7/8"; and w/ 2x #12 x 1 3/4" FH wood screw. Min. embedment is 1 1/2".

Mullion Bracket PDF-JSMI-05D. Screwed to the BUCK FRAME using 6x #12 x 1 1/2" wood screws. Min. embedment is 1 1/4".

(4) JAMB, FIXED, OPEN OUT (SIM)

(7) JAMB, OPERABLE, OPEN OUT 2x PT WOOD BUCK

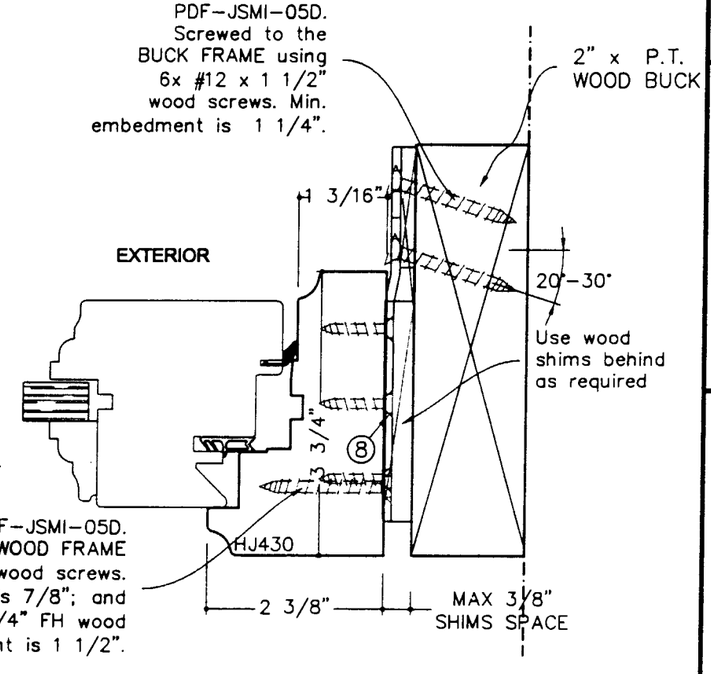

Mullion Bracket PDF-JSMI-05D. Screwed to the WOOD FRAME using 6x #10 x 1" wood screws. Min. embedment is 7/8"; and w/ 2x #12 x 1 3/4" FH wood screw. Min. embedment is 1 1/2".

(#) NUMBERS ARE REFERRING TO THE ASSEMBLY LISTS ON PAGES 7 TO 8

NOTE: Clear "Spectrem 2" silicone sealant at shown interfaces

MQ WINDOWS OF EUROPE AND THE AMERICAS
1855 GRIFFIN ROAD, SUITE A-274
DANIA, FL 33004

JS SERIE
UNCLIPPED MULLION
MIAMI DADE COUNTY

Drawing no.: MQJS-NOA1	
Scale: NONE	Drawn by: S. Marcotte
Date drawn: 01/10/99	Date revised: 07/14/01
File: DJS-M9806	Page: 6 /9

STRUCTURALLY REVIEWED BY:

TILLECO INC.
TILLIT TESTING & ENGINEERING COMPANY
6595 NW 36th STREET, STE. 217
MIAMI, FLORIDA 33166
WALTER A. TILLIT JR., P.E.
STRUCTURAL ENGINEER
FL. LIC.NO. 44167
9/11/02

Approved as complying with the Florida Buiding Code
Date DEC. 19, 2002
NOA# 02-1018.02
Miami Dade Product Control Division
By Manuel Perez

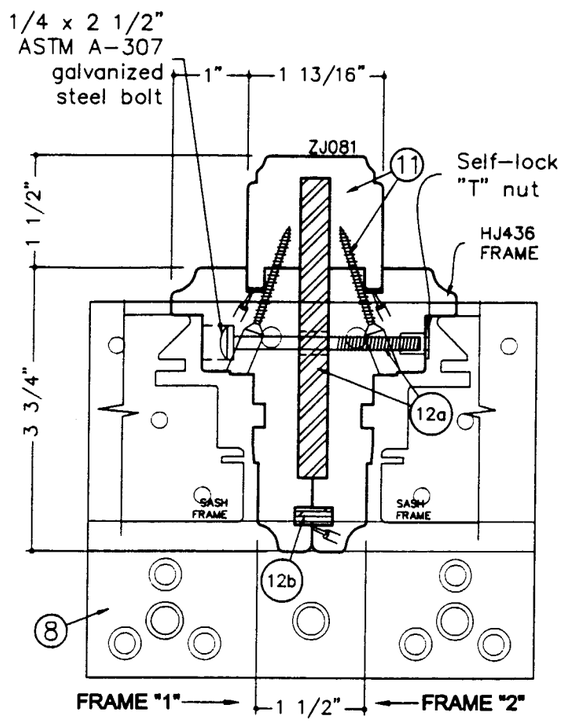

UNCLIPPED MULLION ASSEMBLY
(scale 1 = 2)

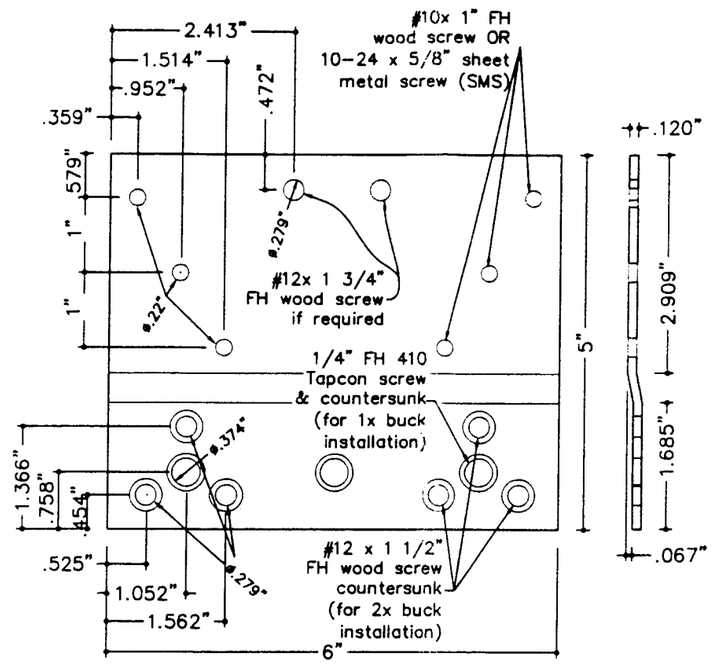

PDF-JSMI-05D
MULLION BRACKET
(scale 1 = 2)

8

Note: Min. edge distance is 3" for Tapcon

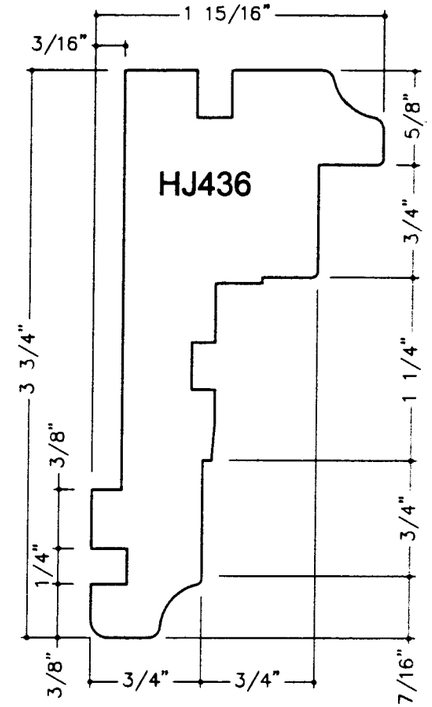

(scale 1 = 1)

BILL OF MATERIALS

REF.	QTY	Component	DESCRIPTION	MATERIAL	DIMENSIONS	MEAN OF ATTACHMENT	LOCATION
8	One per end	Instal-lation	PDF-JSMI-05D Mullion bracket	Galv. Steel	6"w x 5"h x 0.120"t	See cross sections	Centered at the center line of mullion assembly
11	1 per unclipped mullion	Mullion cap	ZJ081 wood mouding, used to hide the steel reinforcement	Maho-gany	1 1/2"(d) x 1 13/16"(t)	2 x #8 x 1 3/4" wood flat head screws @16" o/c. Embedment is 1".	Along the entire length of the unclipped horizontal or vertical mullion.
12a	1 per unclipped mullion	Reinfor-cement	Al1299, Galvanized Steel AISI C1020, Cold drawn, yield point 47,000 psi	Galv. Steel	1/2"(t) x 4"(d)	1/4" x 2 1/2" ASTM A-307 galvanized steel bolt, @ 2" from one end of the steel and @ 16" o/c balance.	Along the entire length of the unclipped horizontal or vertical mullion. Bolted through a "T" self lock nut.
12b	1 per mullion	Alignment plate	Plywood shim	Wood	1/4"(t) x 15/32"(w)	N/A (tight fit)	Along the entire length of the unclipped horizontal or vertical mullion

Clear "Spectrem 2" silicone sealant at shown interfaces

MQ WINDOWS OF EUROPE AND THE AMERICAS
1855 GRIFFIN ROAD,
SUITE A-274
DANIA, FL 33004

JS SERIE
UNCLIPPED MULLION
MIAMI DADE COUNTY

Drawing no.: MQJS-NOA1	
Scale: NONE	Drawn by: S. Marcotte
Date drawn: 01/10/99	Date revised: 07/14/01
File: DJS-M9807	Page: 7 /9

STRUCTURALLY REVIEWED BY:

TILLECO INC.
TILLIT TESTING & ENGINEERING COMPANY
6595 NW 36th STREET, STE. 217
MIAMI, FLORIDA 33166
WALTER A. TILLIT JR., P.E.
STRUCTURAL ENGINEER
FL. LIC.NO. 44197

9/14/02

Approved as complying with the Florida Buiding Code
Date DEC. 19, 2002
NOA# 02-1018.02
Miami Dade Product Control Division
By

TYPE OF GLUE:
RESIBOIS 222 no 30222-01 TYPE 1
EXTERIOR GLUE FOR WOOD

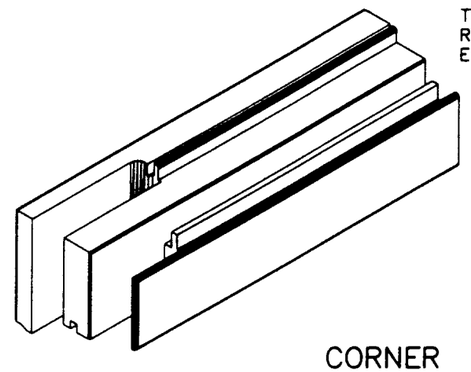

CORNER
ASSEMBLY
(MULTI-FORK)

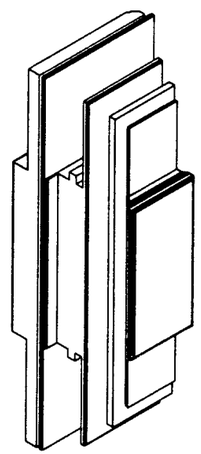

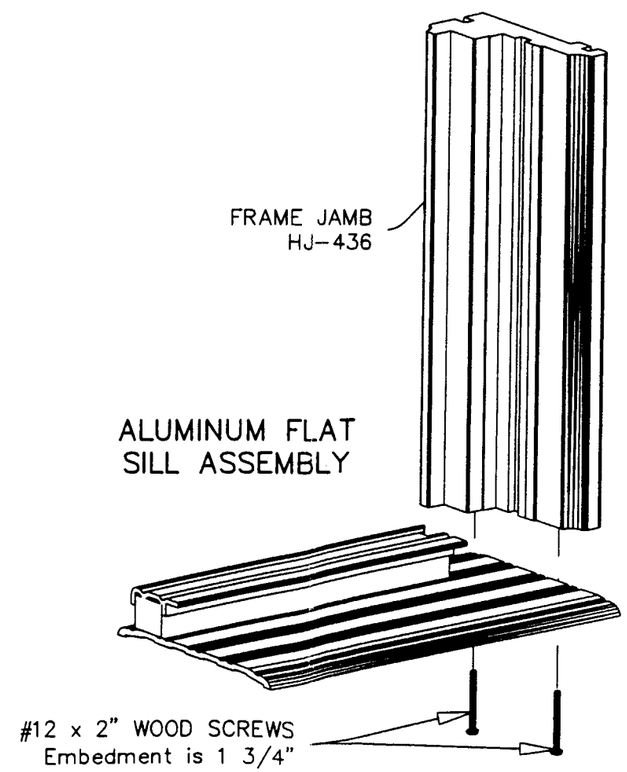

ALUMINUM FLAT
SILL ASSEMBLY

MQ WINDOWS OF EUROPE AND THE AMERICAS

1855 GRIFFIN ROAD, SUITE A-274
DANIA, FL 33004

JS SERIE
INSWING & OUTSWING
CONFIGURATIONS
UNCLIPPED MULLION
METRO DADE COUNTY
PROPOSAL # 98-0073
PA201, PA202 & PA203

Drawing no.: MQJS-NOA1	
Scale: NONE	Drawn by: S. Marcotte
Date drawn: 01/10/99	Date revised:
File: DJS-M9808	Page: 8/9

ENGINEER:

TILTECO INC.
TILLIT TESTING & ENGINEERING COMPANY
6595 NW 36th STREET, STE. 217
MIAMI, FLORIDA 33166

WALTER A. TILLIT JR., P.E.
STRUCTURAL ENGINEER
FL. LIC.NO. 44167
9/14/02

Approved as complying with the
Florida Buiding Code
Date DEC. 19, 2002
NOA# 02-1018.02
Miami Dade Product Control
Division
By Manuel Perez

MAXIMUM FRAME WIDTH & HEIGHT TABLES FOR A GIVEN MULLION SPAN (HORIZONTAL OR VERTICAL)

TABLE 1
VERTICAL OR HORIZONTAL UNCLIPPED MULLION, FIXED-FIXED COMBINATION

Span "L" (in)	Max. Fixed width (1) Fw1 (in)	Max. Fixed width (2) Fw2 (in)
111 3/8	45 3/16	45 3/16
108 3/16	46	46
102 7/16	47	47
97 13/16	48	48
93 15/16	49	49
90 11/16	50	50
88	51	51
85 11/16	52	52
83 11/16	53	53
82	54	54
80 9/16	55	55
79 1/4	56	56
75 11/16	60	60
73 5/7	64	64
72 3/4	68	68
72 1/2	70	70
72 7/16	72	72

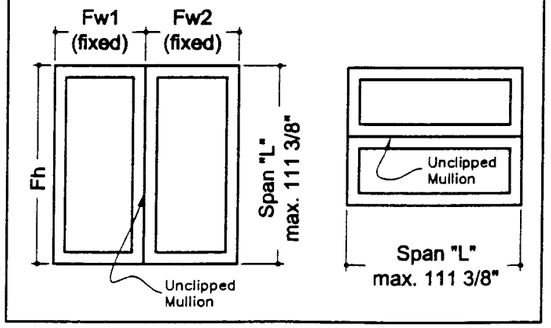

TABLE 2
VERTICAL UNCLIPPED MULLION, FIXED-OPERABLE COMBINATION

Vertical Span "L" (in)	Max. Fixed width Fw 1 (in)	Max. Operable width Fw 2 (in)
0- 111 3/8	42	76 3/4
0- 108 1/8	46	76 3/4
0- 102 1/2	47	76 3/4
0- 97 3/4	48	76 3/4
0- 93 7/8	49	76 3/4
0- 90 3/4	50	76 3/4
0- 88	51	76 3/4
0- 85 5/8	52	76 3/4
0- 83 3/4	53	76 3/4
0- 82	54	76 3/4
0- 80 1/2	55	76 3/4
0- 79 1/4	56	76 3/4
0- 75 3/4	60	76 3/4
0- 73 3/4	64	76 3/4
0- 72 3/4	68	76 3/4
0- 72 1/2	70	76 3/4
0- 72 1/2	72	76 3/4

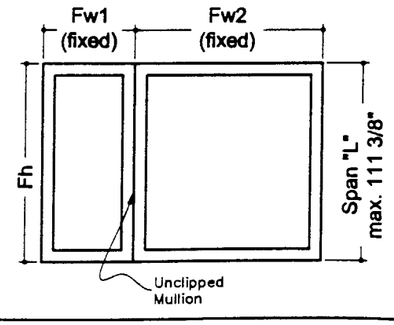

TABLE 3
HORIZONTAL UNCLIPPED MULLION, FIXED-OPERABLE COMBINATION

Horizontal Span "L" (in)	Max. Fixed height Fh1 (in)	Max. Operable height Fh2 (in)
76 3/4	58	111 3/8
75 11/16	60	111 3/8
73 3/4	64	111 3/8
72 3/4	68	111 3/8
72 1/2	70	111 3/8
72 7/16	72	111 3/8

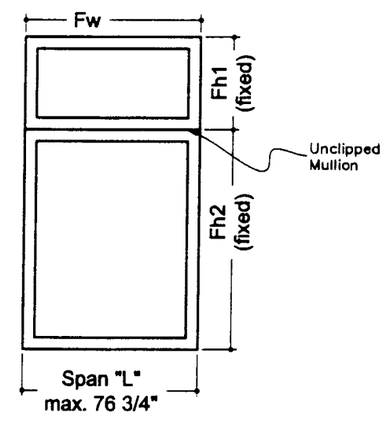

DESIGN PRESSURE
Positive Pressure: +58 psf Negative Pressure -68 psf
NOTE: All sizes noted are maximum sizes. Sizes smaller in width & height are permitted.
NOTE: This unit will not need a hurricane protective system.

LEGEND:
Fw: FRAME SIZE, WIDTH
Fh: FRAME SIZE, HEIGHT

MQ WINDOWS OF EUROPE AND THE AMERICAS
1855 GRIFFIN ROAD,
SUITE A-274
DANIA, FL 33004

JS SERIE
UNCLIPPED MULLION
MIAMI DADE COUNTY

Drawing no.: MQJS-NOA1	
Scale: NONE	Drawn by: S. Marcotte
Date drawn: 01/10/99	Date revised: 07/14/01
File: DJS-M9809	Page: 9/ 9

STRUCTURALLY REVIEWED BY:

TILLECO INC.
TILLIT TESTING & ENGINEERING COMPANY
6595 NW 36th STREET, STE. 217
MIAMI, FLORIDA 33166

WALTER A. TILLIT JR., P.E.
STRUCTURAL ENGINEER
FL. LIC.NO. 44197
9/14/02

Approved as complying with the Florida Buiding Code
Date DEC. 19, 2002
NOA# 02-1018.02
Miami Dade Product Control Division
By