MIAMI-DADE

BUILDING CODE COMPLIANCE OFFICE (BCCO)
PRODUCT CONTROL DIVISION

MIAMI-DADE COUNTY, FLORIDA
METRO-DADE FLAGLER BUILDING
140 WEST FLAGLER STREET, SUITE 1603
MIAMI, FLORIDA 33130-1563
(305) 375-2901 FAX (305) 375-2908

NOTICE OF ACCEPTANCE (NOA)

Therma-Tru Corporation
108 Mutzfeld Road
Butler, IN 46721

SCOPE:
This NOA is being issued under the applicable rules and regulations governing the use of construction materials. The documentation submitted has been reviewed by Miami-Dade County Product Control Division and accepted by the Board of Rules and Appeals (BORA) to be used in Miami Dade County and other areas where allowed by the Authority Having Jurisdiction (AHJ).

This NOA shall not be valid after the expiration date stated below. The Miami-Dade County Product Control Division (In Miami Dade County) and/or the AHJ (in areas other than Miami Dade County) reserve the right to have this product or material tested for quality assurance purposes. If this product or material fails to perform in the accepted manner, the manufacturer will incur the expense of such testing and the AHJ may immediately revoke, modify, or suspend the use of such product or material within their jurisdiction. BORA reserves the right to revoke this acceptance, if it is determined by Miami-Dade County Product Control Division that this product or material fails to meet the requirements of the applicable building code.

This product is approved as described herein, and has been designed to comply with the High Velocity Hurricane Zone of the Florida Building Code.

DESCRIPTION: "Construction" Series Flush Outswing Residential Insulated Steel Door

APPROVAL DOCUMENT: Drawing No. **B0107**, titled "3/0 X 6/8 Steel Outswing", sheets 1 through 2 of 2, prepared by manufacturer, dated 10/28/96, last revision on 5/27/99, bearing the Miami-Dade County Product Control Renewal stamp with the Notice of Acceptance number and expiration date by the Miami-Dade County Product Control Division.

MISSILE IMPACT RATING: Large Missile Impact

LABELING: Each unit shall bear a permanent label with the manufacturer's name or logo, city, state and following statement: "Miami-Dade County Product Control Approved", unless otherwise noted herein.

RENEWAL of this NOA shall be considered after a renewal application has been filed and there has been no change in the applicable building code negatively affecting the performance of this product.

TERMINATION of this NOA will occur after the expiration date or if there has been a revision or change in the materials, use, and/or manufacture of the product or process. Misuse of this NOA as an endorsement of any product, for sales, advertising or any other purposes shall automatically terminate this NOA. Failure to comply with any section of this NOA shall be cause for termination and removal of NOA.

ADVERTISEMENT: The NOA number preceded by the words Miami-Dade County, Florida, and followed by the expiration date may be displayed in advertising literature. If any portion of the NOA is displayed, then it shall be done in its entirety.

INSPECTION: A copy of this entire NOA shall be provided to the user by the manufacturer or its distributors and shall be available for inspection at the job site at the request of the Building Official.
This NOA **renews NOA # 99-0311.01** and, consists of this page 1 as well as approval document mentioned above.
The submitted documentation was reviewed by **Ishaq I. Chanda, P.E.**

Therma-Tru Corporation

NOTICE OF ACCEPTANCE: EVIDENCE SUBMITTED
(For File ONLY. Not part of NOA)

A. DRAWINGS

1. Manufacturer's die drawings and sections.
2. Drawing No. Drawing No. **B0107**, titled "3/0 X 6/8 Steel Outswing", sheets 1 through 2 of 2, prepared by manufacturer, dated 10/28/96, last revised on 5/27/99.

B. TESTS

1. Test report in file # 96-0812.02 & # 96-0403.01.

C. CALCULATIONS

1. Calcs transferred from file # 99-0311.01.

D. MATERIAL CERTIFICATIONS

1. Mat'l certification documents in file # 96-0812.02 & # 96-0403.01.

E. STATEMENTS

1. Statement letter of "No change from previous approval", dated 10-09-02 issued by Therma-Tru, signed by Steve Jasperson.

F. OTHER

1. This NOA **renews** 99-0311.01, which expires on 12-02-02.
2. Previous associated files 96-0812.02 and 96-0403.01.

Ishaq I. Chanda

Ishaq I. Chanda, P.E.
Product Control Examiner
NOA No 02-1022.15
Expiration Date: December 02, 2007
Approval Date: November 21, 2002

REV	DESCRIPTION	DATE
B	REVISED DWG PER BCCD PRODUCT CONTROL DIVISION	1-21-99
C	REVISED SHEET 2.	2-3-99
D	REVISED INSTALLATION VIEW & B.O.M.	5-11-99
E	REVISED ITEMS 1 & 14.	5-27-99

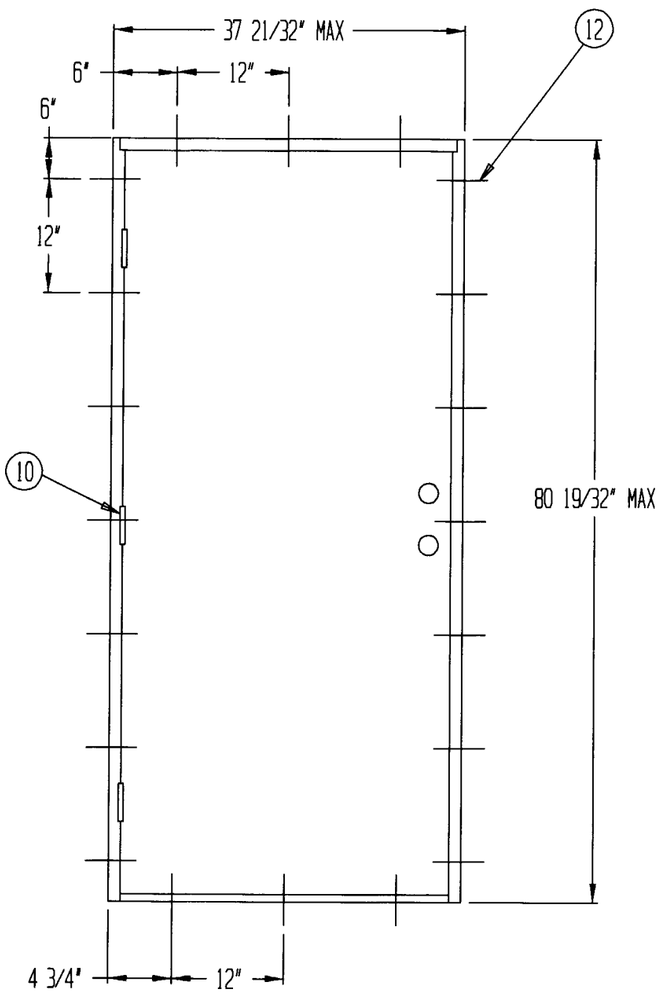

UNIT INSTALLATION

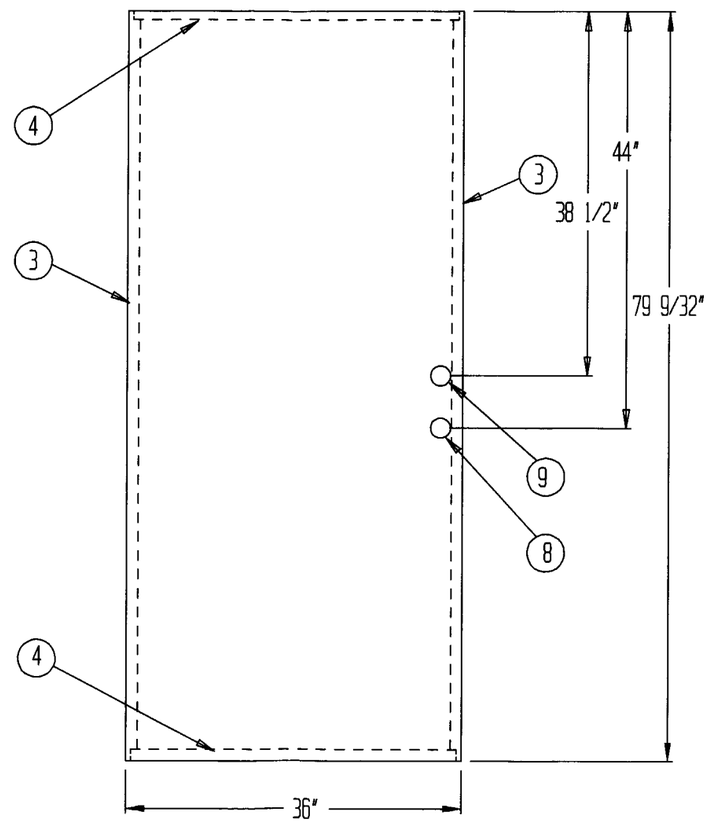

DOOR DETAIL

CONFIGURATION: X

DESIGN PRESSURE RATING	
POSITIVE	+ 55.0 psf
NEGATIVE	- 65.6 psf

ITEM	QTY	DESCRIPTION
14	20	3/16" X 2 3/4" TAPCON SCREW
13	10	2 1/2" STAPLES
12	20	#10 X 2 3/4" SCREWS
11	AS REQD	SEALANT
10	3	4" X 4" THERMA-TRU BRAND SELF-LOCATING HINGES SECURED W/4 #10 X 2 1/2" FHWS (2 TOP - 1 CENTER AND BOTTOM) AND 8 #10 X 3/4" FHWS
9	1	KWIKSET 660 SERIES DEAD BOLT
8	1	KWIKSET 200 SERIES LOCK SET
7	1	ALUMINUM OUTSWING SILL W/ BUMPER SEAL
6	AS REQD	THERMA-TRU BRAND COMPRESSION WEATHERSTRIP
5	3	4 9/16" X 1 1/4" FINGERJOINTED PINE JAMBS & HEADER KERFED 1/8" X 1/2" FOR COMPRESSION WEATHERSTRIP.
4	2	15/16" x 1 1/4" END RAILS
3	2	1 1/4" X 1 11/16" PINE STILES
2	AS REQD	POLYURETHANE FOAM CORE, BASF ELASTOPOR P10160-R RESIN/ELASTOPOR P1038 ISOCYANATE RIGID URETHANE FOAM SYSTEM, SELF-BONDED TO INSIDE FACES. MINIMUM DENSITY 1.9 LBS/CU. FT.
1	2	STEEL, COLD ROLLED MIN. 25 GA. (MIN. 0.018" THK) COATING WEIGHT 0.102 OUNCE/SF (TOTAL BOTH SIDES); YIELD STRENGTH: Fy = 26,900 psi.

BILL OF MATERIAL

THERMA-TRU® CORPORATION

TITLE: 3/0 X 6/8 STEEL OUTSWING

DRAWN BY:	DATE:	SCALE:	DRAWING NO.:	REV:	SHEET:
R.F.	10-28-96	NONE	80107	E	1 OF 2

PRODUCT RENEWED
as complying with the Florida Building Code
Acceptance No. 02-1022.15
Expiration Date DECEMBER 02, 2002
By Ishaq I. Chanda
Miami Dade Product Control Division

APPROVED AS COMPLYING WITH THE SOUTH FLORIDA BUILDING CODE
DATE August 12 1999
BY Ishaq I. Chanda
PRODUCT CONTROL DIVISION
BUILDING CODE COMPLIANCE OFFICE
ACCEPTANCE NO. 99-0311.01

REV	DESCRIPTION	DATE
B	REVISED DWG PER BCCD PRODUCT CONTROL DIVISION	1-21-99
C	REVISED MASONRY SCREW	2-3-99
D	REVISED SECTION VIEWS	5-11-99

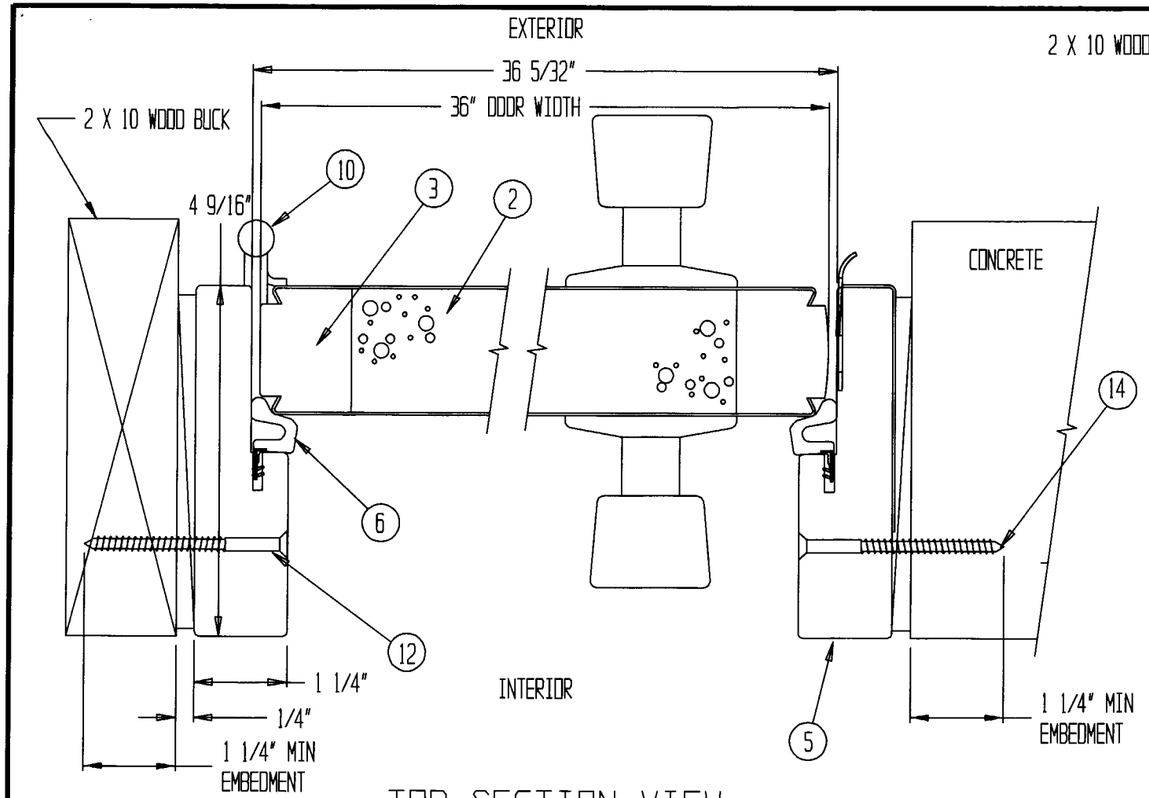

TOP SECTION VIEW

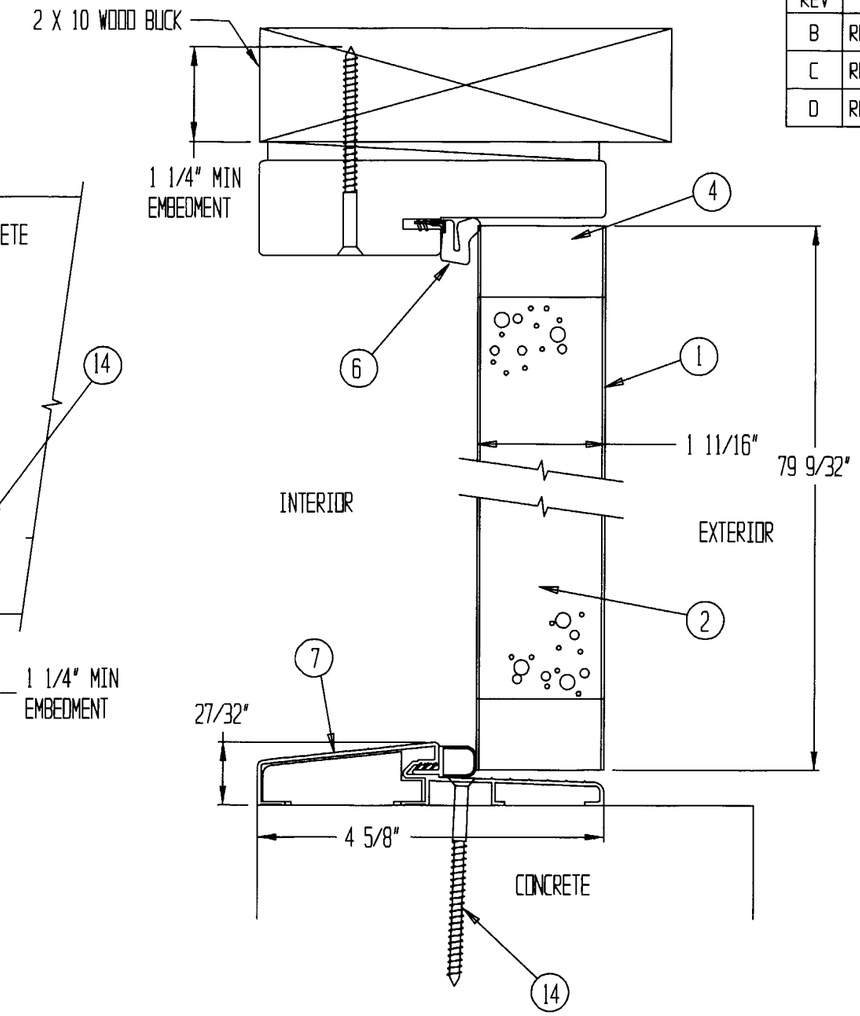

SIDE SECTION VIEW

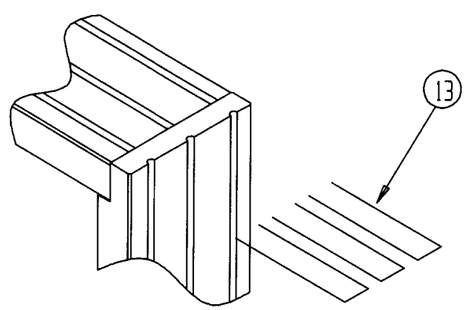

HEAD/JAMB DETAIL

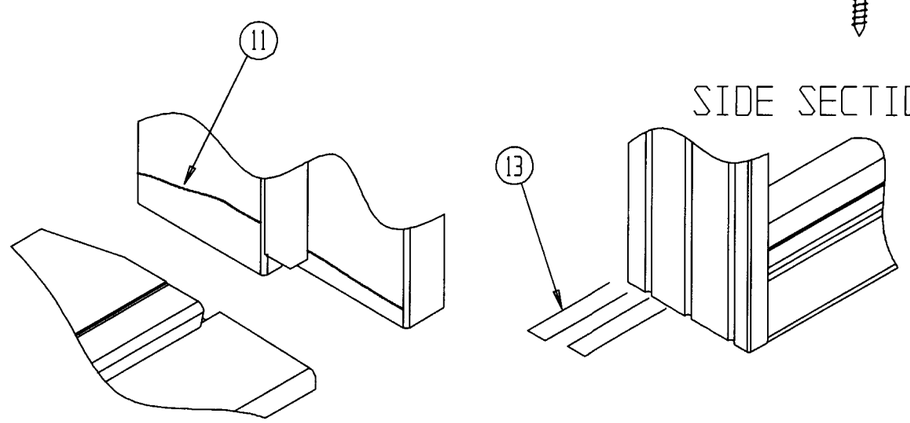

SILL/JAMB DETAIL

THERMA-TRU® CORPORATION

TITLE: 3/0 X 6/8 STEEL OUTSWING

DRAWN BY:	DATE:	SCALE:	DRAWING NO.:	REV:	SHEET:
R.F.	10-28-96	NONE	B0107	E	2 OF 2

PRODUCT RENEWED
as complying with the Florida Building Code
Acceptance No 02-1022.15
Expiration Date DEC 02, 2007
By Ishaq I. Chanda
Miami Dade Product Control Division

APPROVED AS COMPLYING WITH THE SOUTH FLORIDA BUILDING CODE
DATE August 12 1999
BY Ishaq I. Chanda
PRODUCT CONTROL DIVISION
BUILDING CODE COMPLIANCE OFFICE
ACCEPTANCE NO. 99-1311.01