MIAMI-DADE

BUILDING CODE COMPLIANCE OFFICE (BCCO)
PRODUCT CONTROL DIVISION

MIAMI-DADE COUNTY, FLORIDA
METRO-DADE FLAGLER BUILDING
140 WEST FLAGLER STREET, SUITE 1603
MIAMI, FLORIDA 33130-1563
(305) 375-2901 FAX (305) 375-2908

NOTICE OF ACCEPTANCE (NOA)

Eagle Window & Door, Inc.
20445 Kerper Boulevard
Dubuque, IA 52004

SCOPE:
This NOA is being issued under the applicable rules and regulations governing the use of construction materials. The documentation submitted has been reviewed by Miami-Dade County Product Control Division and accepted by the Board of Rules and Appeals (BORA) to be used in Miami Dade County and other areas where allowed by the Authority Having Jurisdiction (AHJ).

This NOA shall not be valid after the expiration date stated below. The Miami-Dade County Product Control Division (In Miami Dade County) and/or the AHJ (in areas other than Miami Dade County) reserve the right to have this product or material tested for quality assurance purposes. If this product or material fails to perform in the accepted manner, the manufacturer will incur the expense of such testing and the AHJ may immediately revoke, modify, or suspend the use of such product or material within their jurisdiction. BORA reserves the right to revoke this acceptance, if it is determined by Miami-Dade County Product Control Division that this product or material fails to meet the requirements of the applicable building code.

This product is approved as described herein, and has been designed to comply with the High Velocity Hurricane Zone of the Florida Building Code.

DESCRIPTION: Series "93-CAUX" Aluminum Clad Wood Fixed Window

APPROVAL DOCUMENT: Drawing No. **S99-73**, titled "Series 93-CAUX Aluminum Clad Fixed Frame Assembly", sheets 1 through 5 of 5 dated 10/22/99 with revision #4 dated 04/17/02, prepared by R.W. Building Consultant, Inc., bearing the Miami-Dade County Product Control Renewal stamp with the Notice of Acceptance number and expiration date by the Miami-Dade County Product Control Division.

MISSILE IMPACT RATING: Large and Small Missile Impact

LABELING: Each unit shall bear a permanent label with the manufacturer's name or logo, city, state and following statement: "Miami-Dade County Product Control Approved", unless otherwise noted herein.

RENEWAL of this NOA shall be considered after a renewal application has been filed and there has been no change in the applicable building code negatively affecting the performance of this product.

TERMINATION of this NOA will occur after the expiration date or if there has been a revision or change in the materials, use, and/or manufacture of the product or process. Misuse of this NOA as an endorsement of any product, for sales, advertising or any other purposes shall automatically terminate this NOA. Failure to comply with any section of this NOA shall be cause for termination and removal of NOA.

ADVERTISEMENT: The NOA number preceded by the words Miami-Dade County, Florida, and followed by the expiration date may be displayed in advertising literature. If any portion of the NOA is displayed, then it shall be done in its entirety.

INSPECTION: A copy of this entire NOA shall be provided to the user by the manufacturer or its distributors and shall be available for inspection at the job site at the request of the Building Official.
This NOA **renews NOA # 02-0719.01** and consists of this page 1 as well as approval document mentioned above.
The submitted documentation was reviewed by **Manuel Perez, P.E.**

Eagle Window & Door, Inc.

NOTICE OF ACCEPTANCE: EVIDENCE SUBMITTED
(For File ONLY. Not part of NOA)

A. DRAWINGS

1. Manufacturer's die drawings and sections.
2. Drawing No. **S99-73**, titled "Series 93-CAUX Aluminum Clad Fixed Frame Window", sheets 1 through 5 of 5, dated 10/22/99 with revision #4 dated 04/17/02, prepared by R.W. Building Consultant, Inc.

B. TESTS

1. Test reports on 1) Air Infiltration Test, per SFBC, 202-94
   2)Uniform Static Air Pressure Test, Loading per SFBC, PA 202-94
   3) Water Resistance Test, per SFBC, PA 202-94
   4) Large Missile Impact Test per SFBC, PA 201-94)
   5) Cyclic Wind Pressure Loading per SFBC, PA 203-94
   6) Forced Entry Test, per SFBC 3603.2 (b) and PA 202-94

   along with marked-up drawings and installation diagram of single rectangular and three-window mulled units, aluminum clad wood fixed windows, prepared by Certified Testing Laboratories, Test Report No. **CTLA-626W**, dated December 9, 2000, signed and sealed by Ramesh C. Patel, P.E.
2. Test reports on 1) Air Infiltration Test, per PA 202-94
   2) Uniform Static Air Pressure Test, Loading per PA 202-94
   3) Water Resistance Test, per PA 202-94
   4) Large Missile Impact Test per SFBC, PA 201-94)
   5) Cyclic Wind Pressure Loading per SFBC, PA 203-94
   6) Forced Entry Test, per SFBC 3603.2 (b) and PA 202-94

   along with marked-up drawings and installation diagram of a rectangular and arched top/rectangular, aluminum clad wood fixed window, prepared by Certified Testing Laboratories, Test Report No. **CTLA-437W2**, dated September 3, 1999, signed and sealed by Ramesh C. Patel, P.E. **(Submitted under previous approval)**
3. Test reports on 1) Air Infiltration Test, per PA 202-94
   2) Uniform Static Air Pressure Test, Loading per PA 202-94
   3) Water Resistance Test, per PA 202-94
   4) Large Missile Impact Test per SFBC, PA 201-94)
   5) Cyclic Wind Pressure Loading per SFBC, PA 203-94

   along with marked-up drawings and installation diagram of a rectangular aluminum clad wood fixed window, prepared by Certified Testing Laboratories, Test Report No. **CTLA-732W-1**, dated November 6, 2001, signed and sealed by Ramesh C. Patel, P.E.

Manuel Perez, P.E.
Product Control Examiner
NOA No 02-1029.02
Expiration Date: January 14, 2008
Approval Date: January 16, 2003

NOTICE OF ACCEPTANCE: EVIDENCE SUBMITTED
(For File ONLY. Not part of NOA)

C. CALCULATIONS

1. Anchor Calculations, dated September 5, 1999, prepared,, signed and sealed by Mark C Fetherman, P.E.

D. MATERIAL CERTIFICATIONS

1. Notice of Acceptance No. **99-0908.01**, issued to Cardinal DPG for their Cardinal "Sea-Storm Type B" Glass Laminate, approved on 12/30/99 and expiring on 12/30/02.

E. STATEMENTS

1. Statement letter of conformance and no-financial interest, dated January 18, 2001, from Builder's Engineering Network, Inc. signed and sealed by Mark C. Fetherman, P.E.
2. Statement letter naming Rick Wright as their contact person for all matters pertaining to the revision of this file, dated August 30, 1999,from Eagle Window & Door, Inc. signed by Todd Bergstrom, Senior Design Technologist.

F. OTHER

1. This NOA renews NOA No. **02-0719.01** issued to **Eagle Window & Door, Inc.** for their ***Series 93-CAUX Aluminum Clad Wood Fixed Window – Impact Resistant***, approved on 10/24/02 and expiring on 01/14/03.

Manuel Perez, P.E.
Product Control Examiner
NOA No 02-1029.02
Expiration Date: January 14, 2008
Approval Date: January 16, 2003

EAGLE WINDOW & DOOR, INC.

SERIES 93-CAUX

ALUMINUM CLAD FIXED FRAME WINDOWS

GENERAL NOTES

1. THIS PRODUCT IS DESIGNED TO MEET THE FLORIDA BUILDING CODE.
2. WOOD BUCKS BY OTHERS, MUST BE ANCHORED PROPERLY TO TRANSFER LOADS TO THE STRUCTURE.
3. PRODUCT ANCHORS SHALL BE AS LISTED AS SPACED AS SHOWN ON DETAILS. ANCHOR EMBEDMENT TO BASE MATERIAL SHALL BE BEYOND WALL FINISH OR STUCCO.
4. IMPACT RESISTANT SHUTTERS NOT REQUIRED.
5. DESIGN PRESSURE RATING SHALL BE AS FOLLOW:
   – FOR UP TO 8'0 X 5'0 FIXED FRAME WINDOWS SEE TABLE 1.
6. ALL DIMENSIONS ARE GIVEN IN INCHES UNLESS OTHERWISE SHOWN.

PRODUCT DESCRIPTION

FRAME CONSTRUCTION:

1. SELECT SOFT WOOD, FINGER JOINTED WITH CLEAR PINE VENEER. EXTERIOR SURFACE CLAD WITH EXTRUDED ALUMINUM.

GLAZING:

1. LAMINATED GLASS DIRECT SET FROM THE INTERIOR INTO A SILICONE BEDDING AND THE INTERIOR PERIMETER IS TRIMMED WITH A WOOD GLAZING STOP.

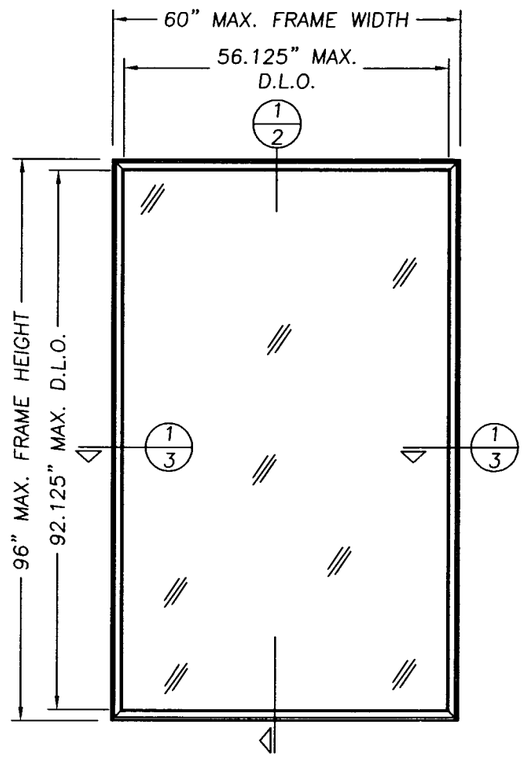

CLAD FIXED FRAME

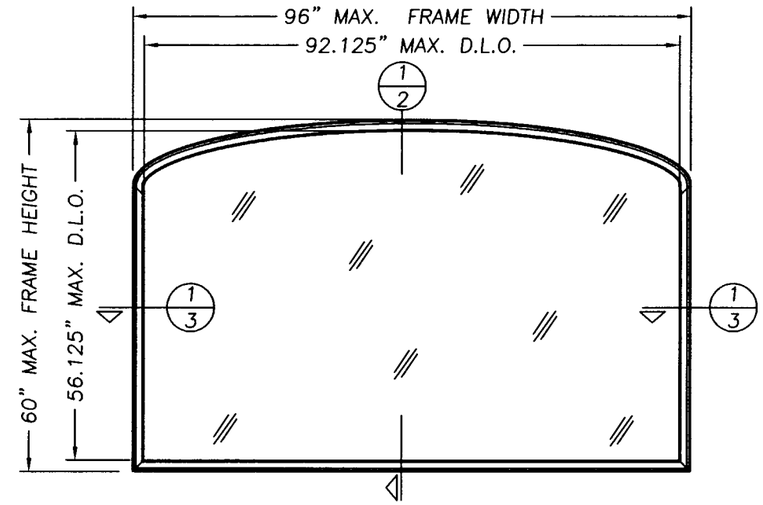

CLAD RADIUS FIXED FRAME

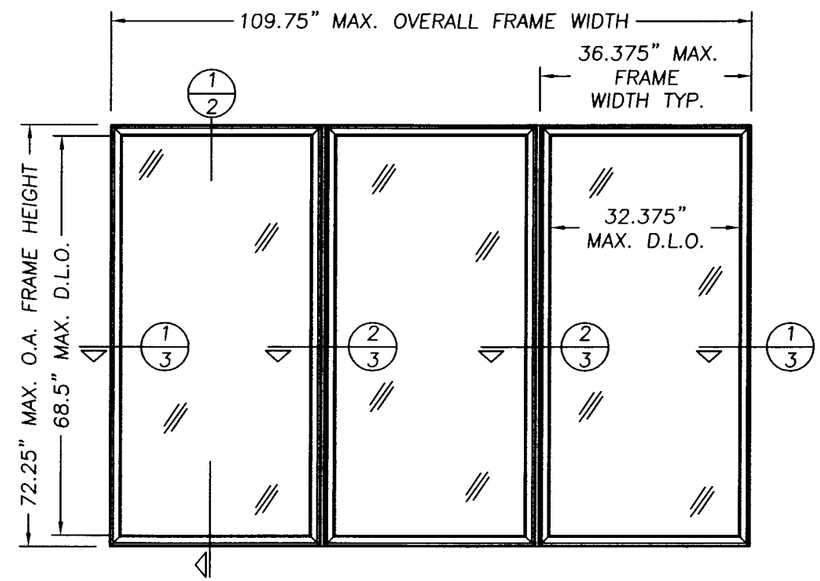

CLAD FIXED FRAME TRIPLE UNIT

TABLE OF CONTENTS

SHEET #	DESCRIPTION
1	GENERAL NOTES & ELEVATIONS
2	VERTICAL CROSS SEC. & B. O. M.
3	HORIZONTAL CROSS SEC. & COMP.
4	ANCHORING DETAILS
5	GLAZING DETAILS

TABLE 1

PRODUCT	DAYLIGHT OPENING	DESIGN PRESSURE RATING (PSF)		GLASS TYPE
RECTANGULAR OR RADIUS	UP TO MAX. 36.0 SQ. FT. UP TO MAX. 31.0 SQ. FT.	+55 +60	–55 –65	LAMINATED HEAT STRENGTHENED (See glazing details sheet 5 of 5)
36.375" x 72.25" TRIPLE	UP TO MAX. 15.5 SQ. FT. PER SINGLE UNIT OF TRIPLE UNIT	+60	–65	LAMINATED ANNEALED GLASS (See glazing details sheet 5 of 5)

PRODUCT RENEWED
as complying with the Florida Buiding Code
Acceptance No. 02-1029.02
Expiration Date JAN. 14, 2008
By Manuel Perez
Miami Dade Product Control Division

Approved as complying with the Florida Buiding Code
Date OCT. 24, 2002
NOA# 02-0719.01
Miami Dade Product Control Division
By Manuel Perez

EAGLE WINDOW & DOOR, INC.
375 EAST 9th St.
DUBUQUE,, IA 52004–1072
PH. 319.556.4408

PRODUCT: SERIES 93–CAUX ALUMINUM CLAD FIXED FRAME WINDOW

PART OR ASSEMBLY: GENERAL NOTES & ELEVATIONS

REVISIONS

NO.	DATE		BY
4	04/17/02	ADD GLASS TYPE	RW
3	03/29/01	GENERAL REVISION	TJH
2	11/15/00	ADDED TRIPLE UNIT & SHT 5	TJH
1	12/21/99	GENERAL	RW

RW BUILDING CONSULTANTS, INC.
813.684.3831

DATE: 10/22/99
SCALE: N.T.S.
DWG. BY: T.H.
CHK. BY: R.W.B.C.
DRAWING NO.: S99–73
SHEET 1 OF 5

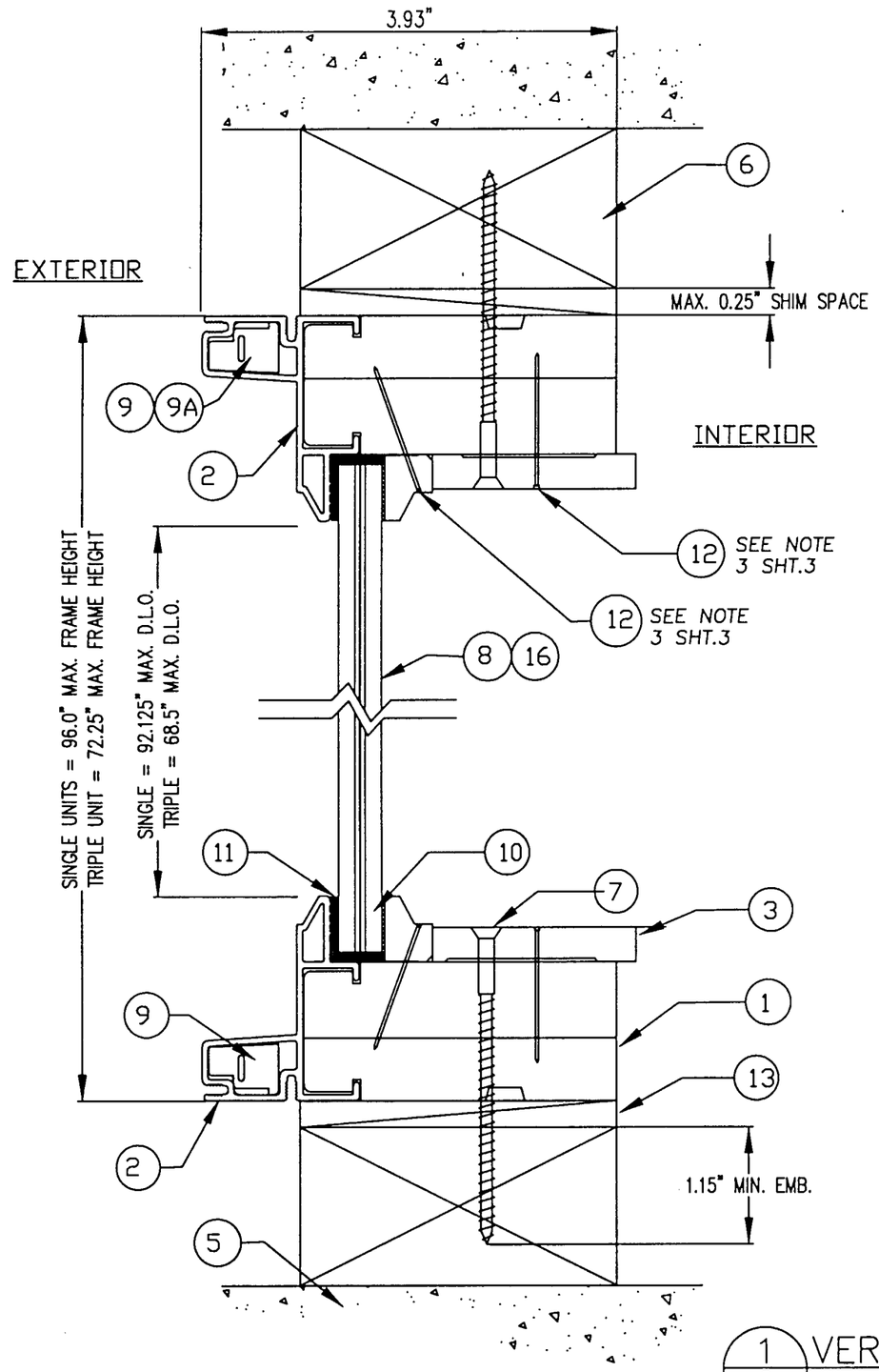

1/2 VERTICAL CROSS SECTION
FIXED FRAME

BILL OF MATERIALS

ITEM	DESCRIPTION	MATERIAL
1	AUXILIARY FRAME 2.97" X 1.3"	LVL WOOD
2	FRAME COVER 1.5" X 1.93" X 0.055"	EXT. ALUMINUM 6063 T6
	TYP. WALL THICKNESS	
3	AUXILIARY STOP .328" X VARIES	WOOD
4	GLAZING STOP 0.75" 0.45"	WOOD
5	MASONRY	–
6	2 X WOOD BUCK	DESIGN BY OTHERS
7	#8 X 3" PFH WS	–
8	0.472" LAMINATED H. S. GLASS	MFG. BY CARDINAL
	(3/16" H.S. Glass – 0.097 Dupont PVB & PET – 3/16" H.S. Glass)	
9	CORNER KEY	VINYL
9A	ADJUSTABLE CORNER KEY	VINYL
10	FOAM TAPE	
11	SILICONE GLAZING COMPOUND	DOW 995
12	18 ga. x 1.25" BRAD	STEEL
13	1/4" Shim (max.)	
14	MULLION COVER	EXT. ALUMINUM 6063 T6
15	LVL MULLION SPACER .75" x 3"	LVL
16	.597" thk. LAMINATED ANNEALED GLASS	MFG. BY CARDINAL
	(1/4" Annealed Glass – 0.097 Dupont PVB & PET – 1/4" Annealed Glass)	
17	#8 X 2" PFH WOOD SCREW	STEEL
18	CORRUGATED FASTENER 1 3/4" x 3/4"	STEEL
19	.410" thk. LAMINATED HEAT STRENGTHENED GLASS	MFG. BY CARDINAL
	(5/32" H.S. Glass – 0.015" PVB – 0.007" PET – 0.075" PVB – 5/32" H.S. Glass)	
20	.597" thk. LAMINATED ANNEALED GLASS	MFG. BY CARDINAL
	(1/4" Ann. Glass – 0.015 PVB – 0.007" PET – 0.075" PVB – 1/4" Ann. Glass)	

NOTE:

SINGLE FRAME HEIGHT CANNOT EXCEED 60.0"
WHEN SINGLE FRAME WIDTH EXCEEDS 60.0".

PRODUCT RENEWED
as complying with the Florida
Building Code
Acceptance No 02-1029.02
Expiration Date JAN. 14, 2008
By Miami Dade Product Control
Division

Approved as complying with the
Florida Building Code
Date OCT. 24, 2002
NOA# 02-0719.01
Miami Dade Product Control
Division
By

EAGLE WINDOW & DOOR, INC.
375 EAST 9th St.
DUBUQUE,, IA 52004-1072
PH. 319.556.4408

PRODUCT: SERIES 93-CAUX ALUMINUM CLAD FIXED FRAME WINDOW

PART OR ASSEMBLY: VERTICAL CROSS SECTION

REVISIONS

NO.	DATE		BY
4	04/17/02	ADD GLASS TYPE	RW
3	03/29/01	GENERAL REVISION	TJH
2	11/15/00	ADDED TRIPLE UNIT & SHT 5	TJH
1	12/21/99	GENERAL	RW

RW BUILDING CONSULTANTS, INC.
813.684.3831

DATE: 10/22/99
SCALE: 1/2" = 1"
DWG. BY: T.H.
CHK. BY: R.W.B.C.
DRAWING NO.: S99-73
SHEET 2 OF 5

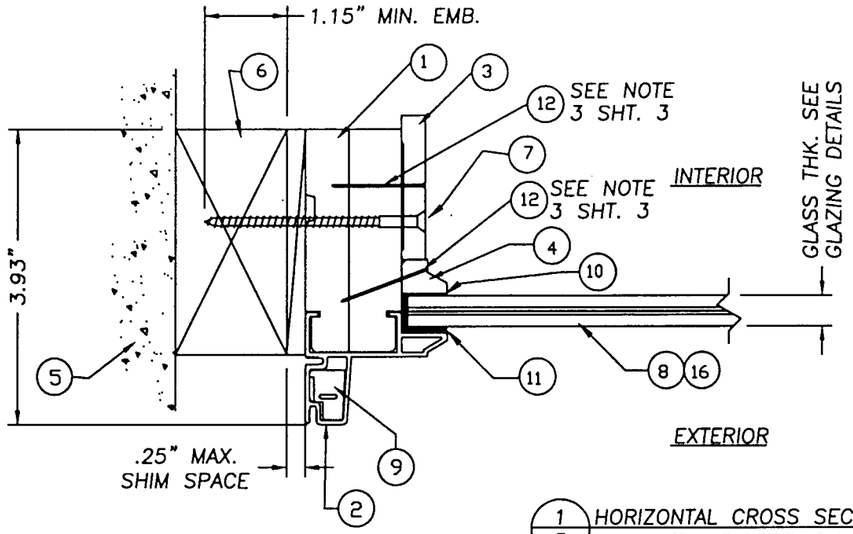

1/3 HORIZONTAL CROSS SECTION FIXED FRAME TO BUCK

NOTE:
1. SPACING FOR ITEM #17 IS AS FOLLOWS FROM BOTTOM UP: 6" & (3) MORE AT 20" O.C.
2. SPACING FOR ITEM #18 IS AS FOLLOWS FROM TOP DOWN: FIRST ROW; 3" DOWN & (15) MORE AT 4.5" O.C. SECOND ROW; 2.75" DOWN & (15) MORE AT 4.5" O.C. EACH MULLION HAS (2) ROWS ON THE INTERIOR SIDES. A TOTAL (32) CORRUGATED FASTENERS ARE USED.
3. SPACING FOR ITEM #12 THE BRAD TRIM NAIL IS AS FOLLOWS: 3" IN FROM ALL CORNERS AND A MAX. OF 12" O.C.

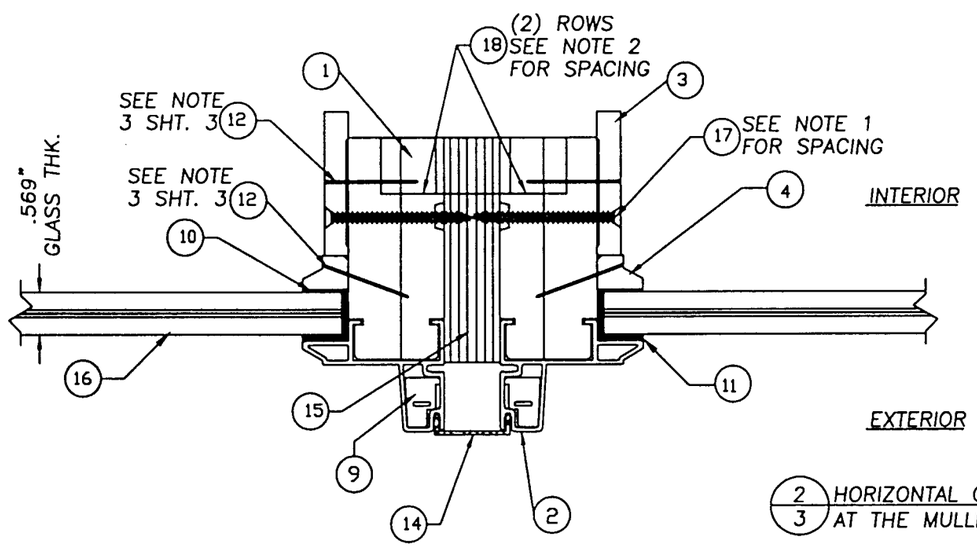

2/3 HORIZONTAL CROSS SECTION AT THE MULLION

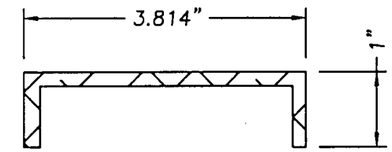

MULLION COVER
.055" EXTRUDED ALUMINUM

14

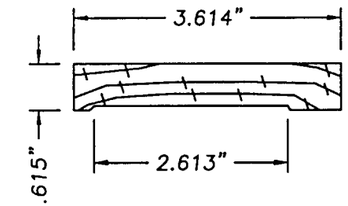

AUXILIARY STOP
WOOD

3

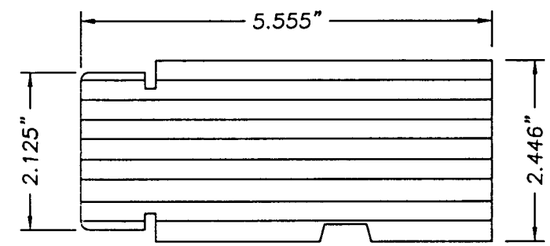

AUXILIARY FRAME
LVL

1

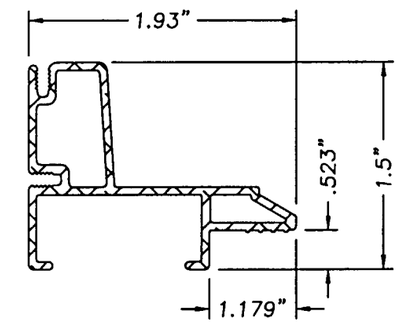

FRAME COVER
.055" EXTRUDED ALUMINUM

2

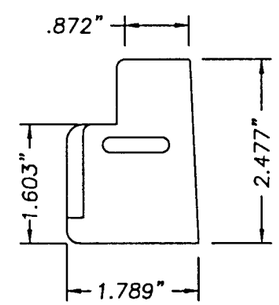

CORNER KEY/ADJUSTABLE CORNER KEY
EXTRUDED VINYL

9

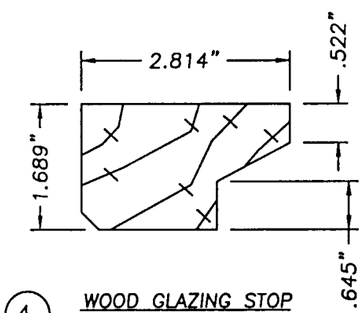

WOOD GLAZING STOP

4

PRODUCT RENEWED
as complying with the Florida Building Code
Acceptance No. 02-1029.02
Expiration Date JAN. 14, 2008
By Manuel Perez
Miami Dade Product Control Division

Approved as complying with the Florida Building Code
Date OCT. 24, 2002
NOA# 02-0219.01
Miami Dade Product Control Division
By Manuel Perez

EAGLE WINDOW & DOOR, INC.
375 EAST 9th St.
DUBUQUE, IA 52004-1072
PH. 319.556.4408

PRODUCT: SERIES 93-CAUX ALUMINUM CLAD FIXED FRAME WINDOW

PART OR ASSEMBLY: HORIZONTAL CROSS SECTION & GLAZING DETAIL

REVISIONS

NO.	DATE		BY
4	04/17/02	ADD GLASS TYPE	RW
3	03/29/01	GENERAL REVISION	TJH
2	11/15/00	ADDED TRIPLE UNIT & SHT 5	TJH
1	12/21/99	GENERAL	RW

RW BUILDING CONSULTANTS, INC.
813.684.3831

DATE: 10/22/99
SCALE: N.T.S.
DWG. BY: T.H.
CHK. BY: R.W.B.C.
DRAWING NO.: S99-73
SHEET 3 OF 5

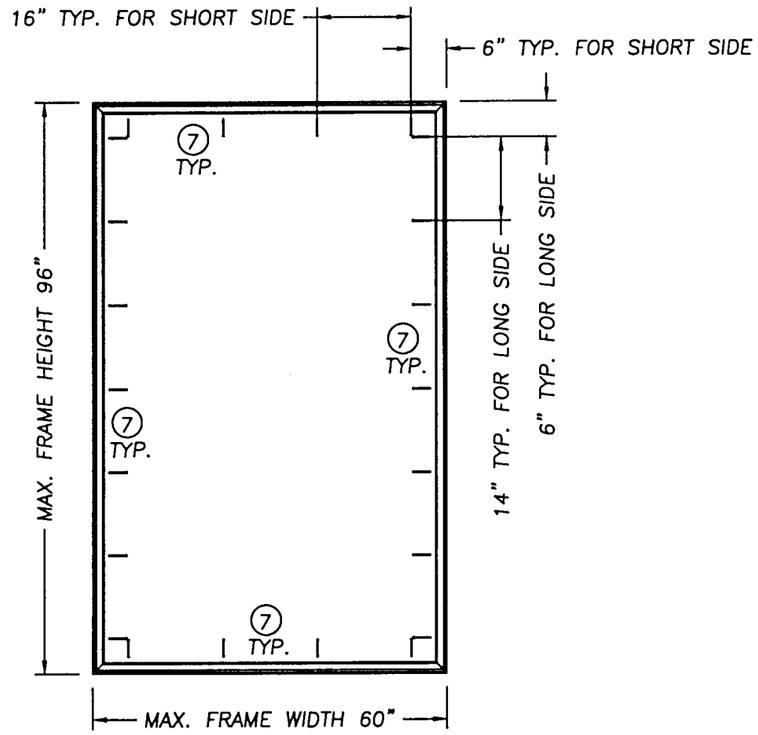

CLAD FIXED FRAME

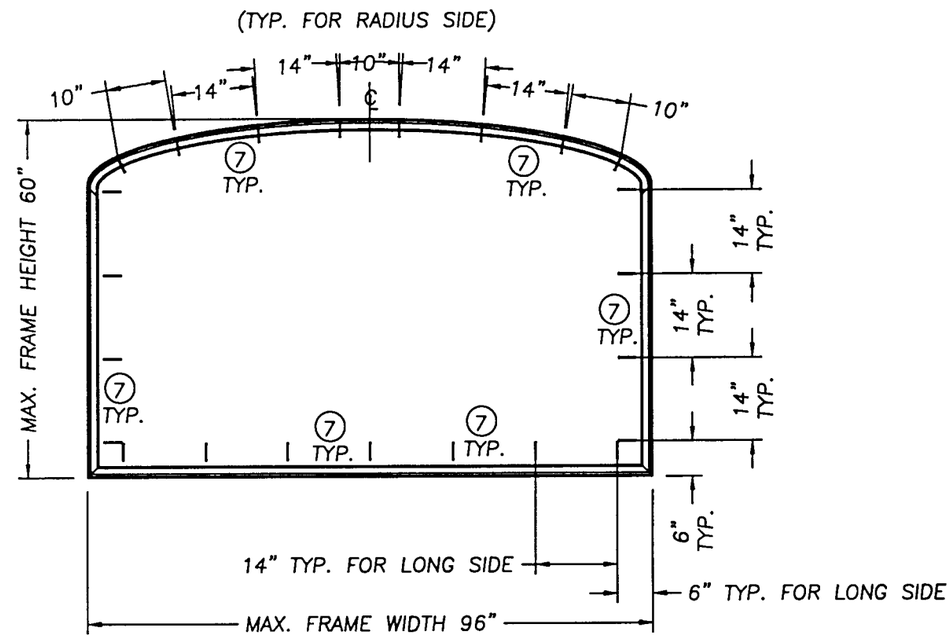

CLAD RADIUS FIXED FRAME

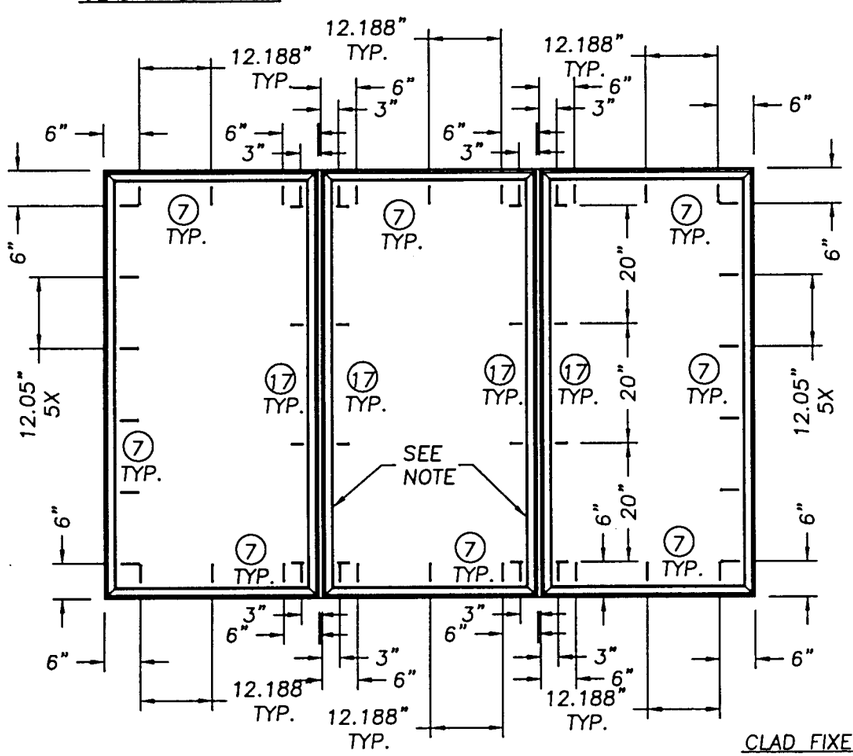

CLAD FIXED FRAME TRIPLE UNIT

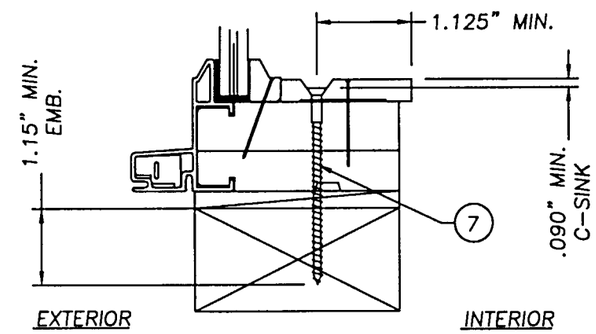

NOTE:
CORRUGATED FASTENERS SEE SECTION 2/3 & NOTE 2 SHT. 3 FOR SPACING & QUANTITY

PRODUCT RENEWED
as complying with the Florida Building Code
Acceptance No. 02-1029.02
Expiration Date JAN. 14, 2008
By Miami Dade Product Control Division

Approved as complying with the Florida Building Code
Date OCT. 24, 2002
NOA# 02-0719.01
Miami Dade Product Control Division
By

EAGLE WINDOW & DOOR, INC.
375 EAST 9th St.
DUBUQUE,, IA 52004-1072
PH. 319.556.4408

PRODUCT: SERIES 93-CAUX ALUMINUM CLAD FIXED FRAME WINDOW

PART OR ASSEMBLY: ANCHORING LOCATIONS

NO.	DATE	REVISIONS	BY
4	04/17/02	ADD GLASS TYPE	RW
3	03/29/01	GENERAL REVISION	TJH
2	11/15/00	ADDED TRIPLE UNIT & SHT 5	TJH
1	12/21/99	GENERAL	RW

RW BUILDING CONSULTANTS, INC.
813.684.3831

DATE: 10/22/99
SCALE: N.T.S.
DWG. BY: T.H.
CHK. BY: R.W.B.C.
DRAWING NO.: S99-73
SHEET 4 OF 5

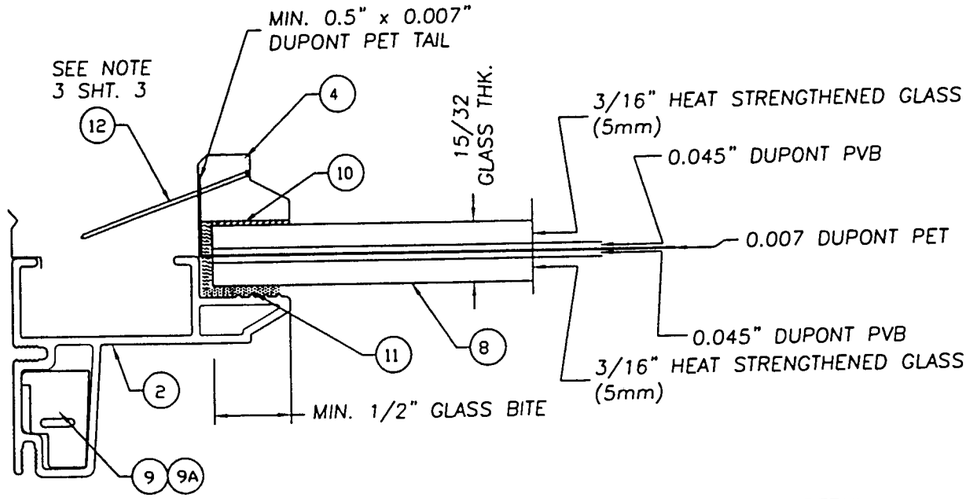

15/32 THK. LAMINATED H.S. GLASS GLAZING DETAIL
CARDINAL "SEA STORM TYPE B" GLASS
(WITH EXTENDED TAIL)

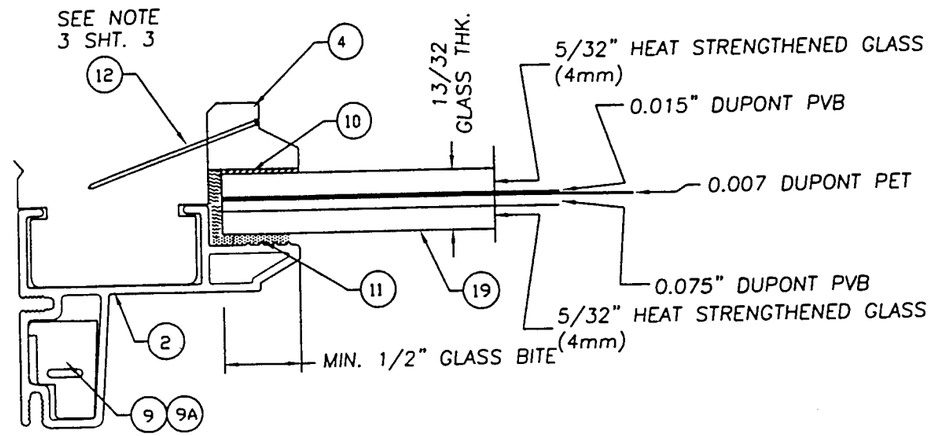

13/32 THK. LAMINATED H.S. GLASS GLAZING DETAIL
CARDINAL "SEA STORM" GLASS
(WITHOUT TAIL)

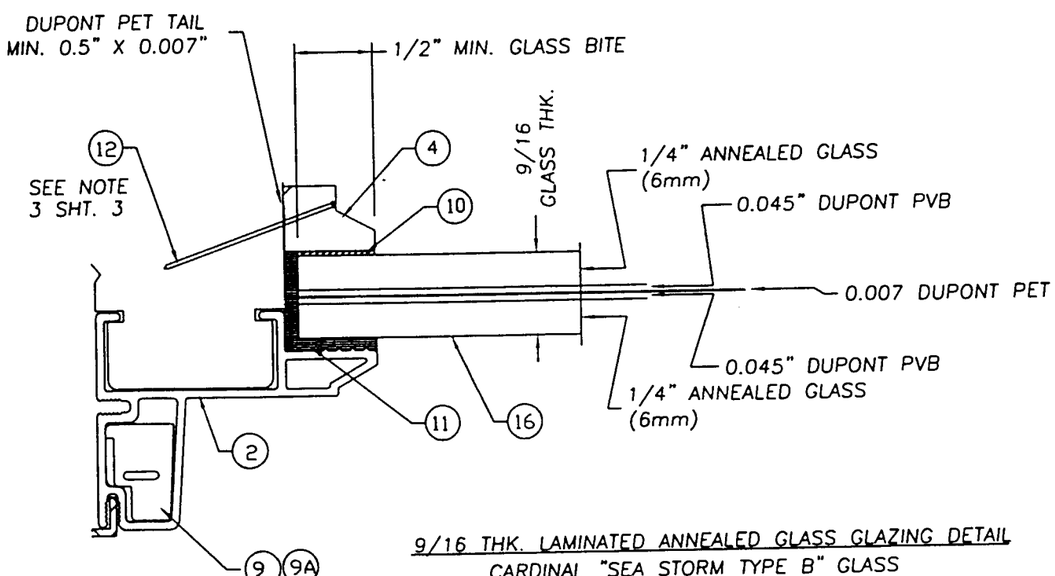

9/16 THK. LAMINATED ANNEALED GLASS GLAZING DETAIL
CARDINAL "SEA STORM TYPE B" GLASS
(WITH EXTENDED TAIL)

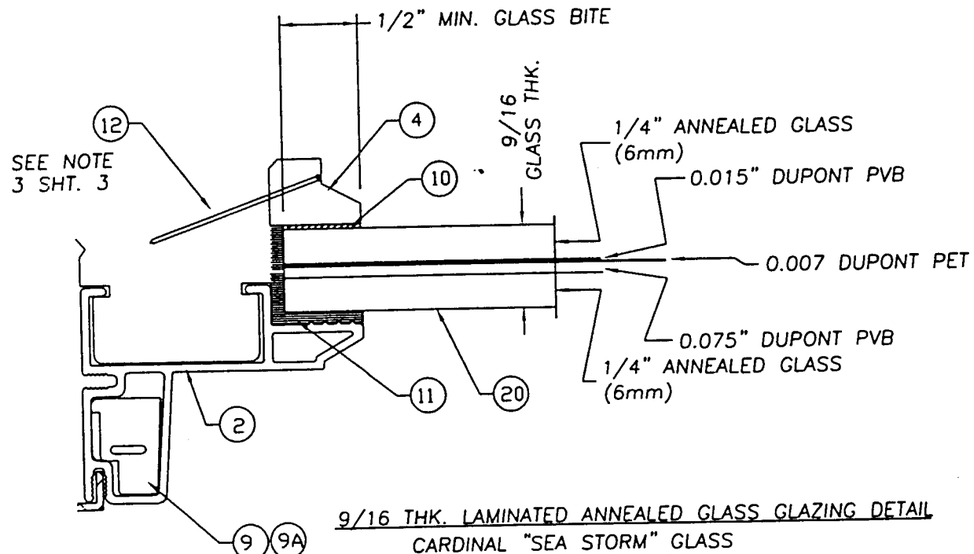

9/16 THK. LAMINATED ANNEALED GLASS GLAZING DETAIL
CARDINAL "SEA STORM" GLASS
(WITHOUT TAIL)

PRODUCT RENEWED
as complying with the Florida
Building Code
Acceptance No. 02-1029.07
Expiration Date JAN. 14, 2008
By Manuel Perez
Miami Dade Product Control
Division

Approved as complying with the
Florida Buiding Code
Date OCT. 24, 2002
NOA# 02-0719.01
Miami Dade Product Control
Division
By Manuel Perez

EAGLE WINDOW & DOOR, INC.
375 EAST 9th St.
DUBUQUE, IA 52004-1072
PH. 319.556.4408

PRODUCT: SERIES 93-CAUX ALUMINUM CLAD FIXED FRAME WINDOW

PART OR ASSEMBLY: HORIZONTAL CROSS SECTION & GLAZING DETAIL

REVISIONS

NO.	DATE		BY
4	04/17/02	ADD GLASS TYPE	RW
3	03/29/01	GENERAL REVISION	TJH
2	11/15/00	ADDED TRIPLE UNIT & SHT 5	TJH
1	12/21/99	GENERAL	RW

RW BUILDING CONSULTANTS, INC.
813.684.3831

DATE: 10/22/99
SCALE: N.T.S.
DWG. BY: T.H.
CHK. BY: R.W.B.C.
DRAWING NO.: S99-73
SHEET 5 OF 5