MIAMI-DADE

BUILDING CODE COMPLIANCE OFFICE (BCCO)
PRODUCT CONTROL DIVISION

MIAMI-DADE COUNTY, FLORIDA
METRO-DADE FLAGLER BUILDING
140 WEST FLAGLER STREET, SUITE 1603
MIAMI, FLORIDA 33130-1563
(305) 375-2901 FAX (305) 375-2908

NOTICE OF ACCEPTANCE (NOA)

United Steel Products Co.
703 Rogers Drive.
Montgomery, MN 56069

SCOPE:

This NOA is being issued under the applicable rules and regulations governing the use of construction materials. The documentation submitted has been reviewed by Miami-Dade County Product Control Division and accepted by the Board of Rules and Appeals (BORA) to be used in Miami Dade County and other areas where allowed by the Authority Having Jurisdiction (AHJ).

This NOA shall not be valid after the expiration date stated below. The Miami-Dade County Product Control Division (In Miami Dade County) and/or the AHJ (in areas other than Miami Dade County) reserve the right to have this product or material tested for quality assurance purposes. If this product or material fails to perform in the accepted manner, the manufacturer will incur the expense of such testing and the AHJ may immediately revoke, modify, or suspend the use of such product or material within their jurisdiction. BCPRC reserves the right to revoke this acceptance, if it is determined by Miami-Dade county Product Control Division that this product or material fails to meet the requirements of the applicable building code.
This product is approved as described herein, and has been designed to comply with the High velocity Hurricane Zone of the Florida Building Code.

DESCRIPTION: Wood Connectors HGAM10 & SPTH

APPROVAL DOCUMENT: Drawing No.**1104-02 & 1108-02**, titled "SPTH Series (Stud Plate Ties) & HGAM10 (Hurricane Gusset Angle),"with no revisions, dated 12/18/02, prepared by United Steel Products Company signed and sealed by R. W. Lutz, PE, bearing the Miami-Dade County Product Control Approval stamp with the Notice of Acceptance (NOA) number and approval date by the Miami-Dade County Product Control Division.

MISSILE IMPACT RATING: None

LABELING: Each unit shall bear a permanent label with the manufacturer's name or logo, city, state and following statement: "Miami-Dade County Product Control Approved", unless otherwise noted herein.

RENEWAL of this NOA shall be considered after a renewal application has been filed and there has been no change in the applicable building code negatively affecting the performance of this product.

TERMINATION of this NOA will occur after the expiration date or if there has been a revision or change in the materials, use, and/or manufacture of the product or process. Misuse of this NOA as an endorsement of any product, for sales, advertising or any other purposes shall automatically terminate this NOA. Failure to comply with any section of this NOA shall be cause for termination and removal of NOA.

ADVERTISEMENT: The NOA number preceded by the words Miami-Dade County, Florida, and followed by the expiration date may be displayed in advertising literature. If any portion of the NOA is displayed, then it shall be done in its entirety.

INSPECTION: A copy of this entire NOA shall be provided to the user by the manufacturer or its distributors and shall be available for inspection at the job site at the request of the Building Official.
This NOA consists of this page 1 as well as approval document mentioned above.
The submitted documentation was reviewed by **Candido F. Font PE.**

PRODUCT CONTROL ACCEPTED

NOA No: 02-1113.05
Expiration Date: January 16, 2008
Approval Date: January 16, 2003

United Steel Products Company.

NOTICE OF ACCEPTANCE: EVIDENCE SUBMITTED

(For File ONLY. Not part of NOA)

A. DRAWINGS

1. Drawing No. 1104-02 & 118-02, dated 12/18/02 with no revisions, prepared by United Steel Products Company, titled SPTH Series (Stud Plate Ties) & HGAM10 (Hurricane Gusset Angle) signed and sealed by R. W. Lutz, PE.

B. TESTS

Test reports on wood connectors per ASTM D1761, signed and sealed by C.R. Caudel, PE & J. D. Lee PE.

	Laboratory Report	Wood Connector	Direction	Date
1.	PTI # 02-3928	SPTH4	Upward	08/16/02.
2.	PTI # 02-3929	SPTH6	Upward	08/16/02
3.	PTI # 02-3930	SPTH8	Upward	08/16/02
4.	TCT # 032153	HGAM10	Lateral	09/23/02

C. CALCULATION

Calculated Capacities prepared by Hughes Manufacturing, Inc.

	Product Model	No. of Pages	Date	Signature
1.	HGAM10	1 through 6	11/08/02	R. W. Lutz, PE.
2.	SPTH Series	1 through 4	11/08/02	R. W. Lutz, PE.

D. MATERIAL CERTIFICATIONS

N/A

E. STATEMENTS

1. No Financial Interest letter issued by USP Lumber Connectors, dated 11/07/02 signed by R. W. Lutz, PE.
2. Code Compliance letter issued by USP Lumber Connectors, dated 11/07/02 signed and sealed by R. W. Lutz, PE.

Candido F. Font PE.
Sr. Product Control Examiner
NOA No 02-11113.05
Expiration Date: January 16, 2008
Approval Date: January 16, 2003

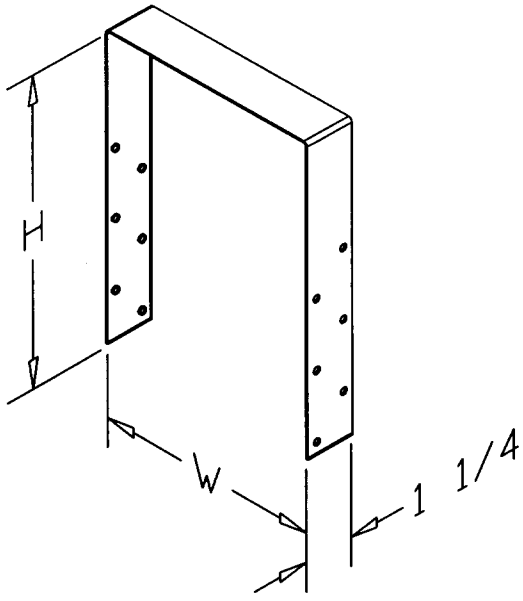

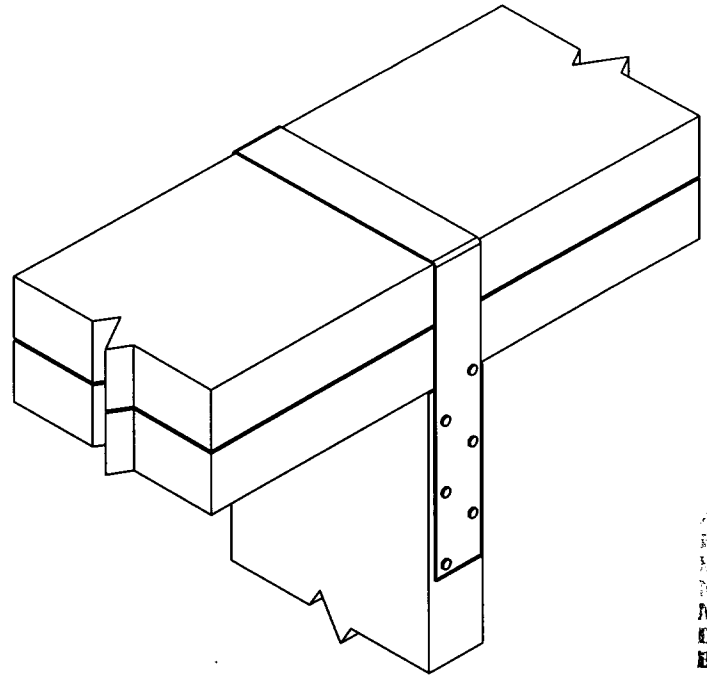

Approved as complying with the Florida Building Code
Date 01/10/03
No. 02-1113.05
Miami-Dade Product Control Division
By

USP PRODUCT	GA.	DIMENSIONS			FASTENER SCHEDULE	ALLOWABLE LOADS (lbs.)
		W	H	L	STUD	UPLIFT
SPTH4	18	3 9/16	8 5/8	-- --	(12) 10d X 1 1/2	1060
SPTH6	18	5 9/16	9 3/8	-- --	(12) 10d X 1 1/2	1095
SPTH8	18	7 5/16	8 1/2	-- --	(12) 10d X 1 1/2	1280

GENERAL NOTES

1) STEEL SHALL CONFORM TO ASTM A653 STRUCTURAL GRADE 33, AND A MINIMUM GALVINIZED COATING OF G90.
2) FASTENERS ARE COMMON WIRE NAILS UNLESS OTHERWISE NOTED.
3) ALLOWABLE LOADS ARE BASED ON THE NATIONAL DESIGN SPECIFICATIONS FOR WOOD CONSTRUCTION 1997 EDITION FOR SOUTHERN YELLOW PINE (G= 0.55 OR BETTER AND MOISTURE CONTENT OF 19% OR LESS). ALL TESTS PERFORMED IN ACCORDANCE WITH ASTM D1761.
4) PENETRATION IS ASSUMED TO BE 1 1/2" INTO WOOD.
5) ALLOWABLE UPLIFT LOADS HAVE BEEN INCREASED BY A DURATION FACTOR OF 33% FOR WIND LOAD CONDITIONS. NO FURTHER INCREASE IS ALLOWED.

Robert W. Lutz
13 DEC 02

UNITED STEEL PRODUCTS COMPANY
703 ROGERS DRIVE, MONTGOMERY, MN. 56069 PHONE (507) 364-7333

NAME: SPTH SERIES (STUD PLATE TIES)

DATE: 12/18/02

ROBERT W. LUTZ
PROFESSIONAL ENGINEER (STRUCTURAL)
FLORIDA REG. NO. 55409

SHEET: 1 OF 1

DRAWING NO.# 1104-02

MDADE

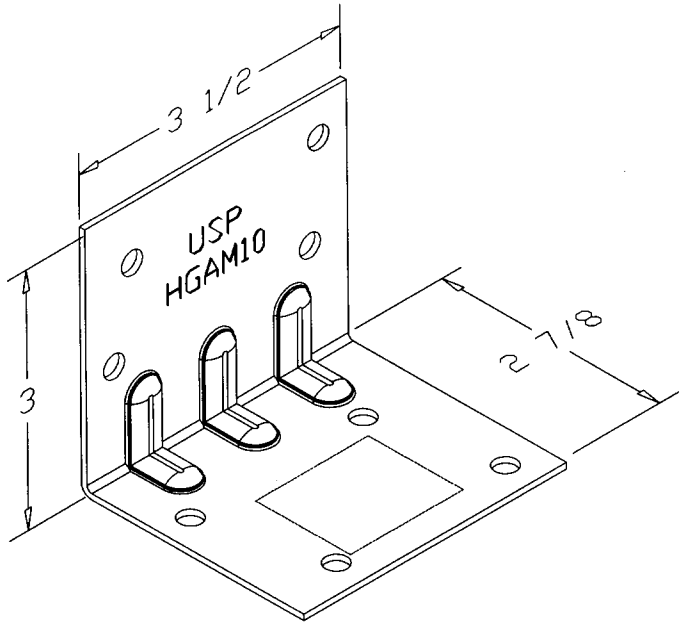

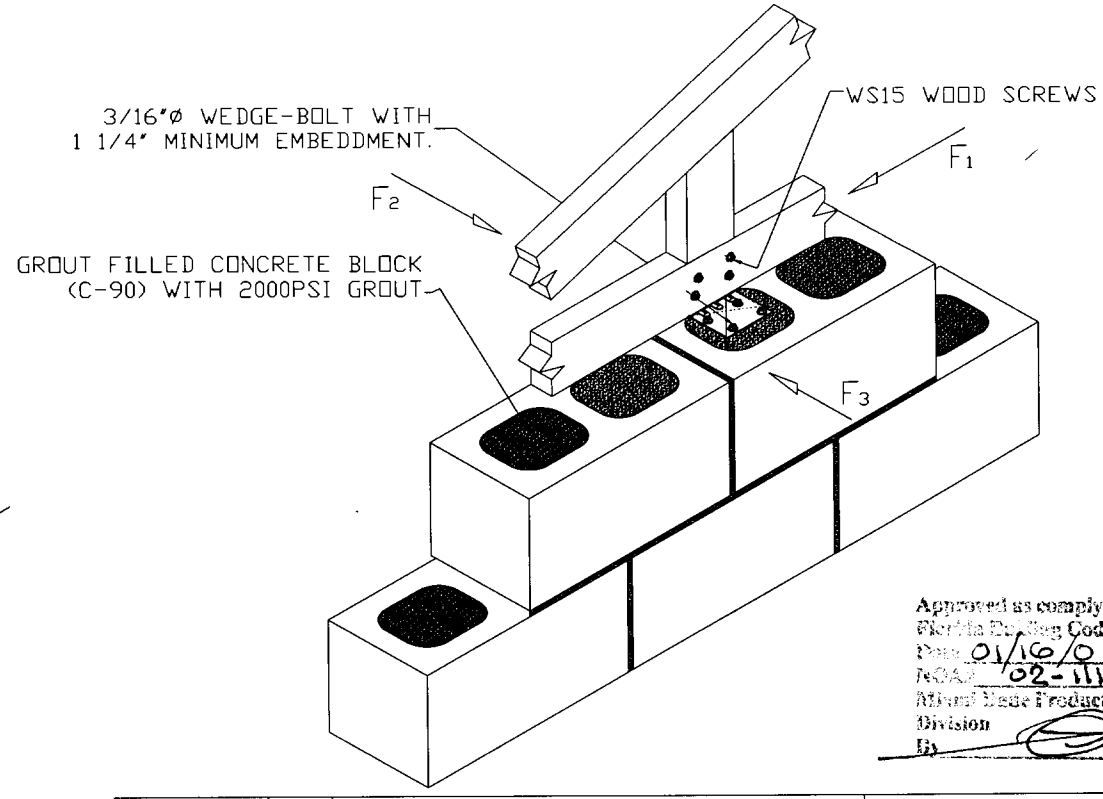

Approved as complying with the Florida Building Code
Date 01/16/03
NOA# 02-1113.03
Miami-Dade Product Control Division
By

PRODUCT CODE	GA.	FASTENER SCHEDULE		ALLOWABLE LOADS (lbs.)			
		RAFTER/ TRUSS	CONCRETE/ MASONRY				
		(4) WS15 *	*(4) 3/16"Ø	F1	F2	F3	UPLIFT
HGAM10	14	WOOD SCREWS	WEDGE-BOLTS	1075	1110	630	850

* WS15 MANUFACTURED BY USP WITH F_{yb} = 217,000 PSI & 1/4D X MINIMUM 1 1/2" LONG.
* WEDGE BOLTS BY POWERS FASTENERS, INC.

GENERAL NOTES

1) STEEL SHALL CONFORM TO ASTM A653 STRUCTURAL GRADE 33, AND A MINIMUM GALVINIZED COATING OF G90.
2) ALLOWABLE LOADS ARE BASED ON THE NATIONAL DESIGN SPECIFICATIONS FOR WOOD CONSTRUCTION 1997 EDITION FOR SOUTHERN YELLOW PINE (G= 0.55 OR BETTER & MOISTURE CONTENT OF 19% OR LESS. ALL TESTS PERFORMED IN ACCORDANCE WITH ASTM D1761.
3) PENETRATION IS ASSUMED TO BE 1 1/2" INTO WOOD RAFTER & STUD. AND 1 1/4" INTO MASONRY WITH WEDGE-BOLTS.
4) ALLOWABLE UPLIFT LOADS HAVE BEEN INCREASED BY A DURATION FACTOR OF 33% FOR WINDLOAD CONDITION. NO FURTHER INCREASE IS ALLOWED.

Robert W. Lutz
18 DEC 02

UNITED STEEL PRODUCTS COMPANY
703 ROGERS DRIVE, MONTGOMERY, MN. 56069 PHONE (507) 364-7333

NAME: HGAM10 (HURRICANE GUSSET ANGLE)

DATE: 12/18/02

ROBERT W. LUTZ
PROFESSIONAL ENGINEER (STRUCTURAL)
FLORIDA REG. NO. 55409

SHEET: 1 OF 1

DRAWING NO.: 1108-02

REVISIONS:

MDADE