MIAMI-DADE

BUILDING CODE COMPLIANCE OFFICE (BCCO)
PRODUCT CONTROL DIVISION

MIAMI-DADE COUNTY, FLORIDA
METRO-DADE FLAGLER BUILDING
140 WEST FLAGLER STREET, SUITE 1603
MIAMI, FLORIDA 33130-1563
(305) 375-2901 FAX (305) 375-2908

NOTICE OF ACCEPTANCE (NOA)

YKK AP America, Inc.
332 Firetower Road
Dublin, GA 31021

SCOPE:

This NOA is being issued under the applicable rules and regulations governing the use of construction materials. The documentation submitted has been reviewed by Miami-Dade County Product Control Division and accepted by the Board of Rules and Appeals (BORA) to be used in Miami Dade County and other areas where allowed by the Authority Having Jurisdiction (AHJ).

This NOA shall not be valid after the expiration date stated below. The Miami-Dade County Product Control Division (In Miami Dade County) and/or the AHJ (in areas other than Miami Dade County) reserve the right to have this product or material tested for quality assurance purposes. If this product or material fails to perform in the accepted manner, the manufacturer will incur the expense of such testing and the AHJ may immediately revoke, modify, or suspend the use of such product or material within their jurisdiction. BORA reserves the right to revoke this acceptance, if it is determined by Miami-Dade County Product Control Division that this product or material fails to meet the requirements of the applicable building code. This product is approved as described herein, and has been designed to comply with the High Velocity Hurricane Zone of the Florida Building Code.

DESCRIPTION: YHC-300 O/G Hurricane Curtain Wall Insulated Glazing

APPROVAL DOCUMENT: Drawing No. YHC-300-OG-LI, titled "YHC-300 O/G Hurricane Curtain Wall Insulated Glazing Large Missile Impact Rated", sheets 1 through 30, prepared by manufacturer, dated 8/5/02, signed, dated and sealed by Walter A. Tillit Jr., P.E. on December 11, 2002, and bearing the Miami-Dade County Product Control Revision stamp with the Notice of Acceptance number and expiration date by the Miami-Dade County Product Control Division.

MISSILE IMPACT RATING: Large and Small Missile Impact

LABELING: Each unit shall bear a permanent label with the manufacturer's name or logo, city, state and following statement: "Miami-Dade County Product Control Approved", unless otherwise noted herein.

RENEWAL of this NOA shall be considered after a renewal application has been filed and there has been no change in the applicable building code negatively affecting the performance of this product.

TERMINATION of this NOA will occur after the expiration date or if there has been a revision or change in the materials, use, and/or manufacture of the product or process. Misuse of this NOA as an endorsement of any product, for sales, advertising or any other purposes shall automatically terminate this NOA. Failure to comply with any section of this NOA shall be cause for termination and removal of NOA.

ADVERTISEMENT: The NOA number preceded by the words Miami-Dade County, Florida, and followed by the expiration date may be displayed in advertising literature. If any portion of the NOA is displayed, then it shall be done in its entirety.

INPECTION: A copy of this entire NOA shall be provided to the user by the manufacturer or its distributors and shall be available for inspection at the job site at the request of the Building Official.

This NOA **revises NOA # 01-0228.09** and, consists of this page 1 as well as approval document mentioned above. The submitted documentation was reviewed by **Jaime M. Eisen, P.E.**

YKK AP America, Inc.

NOTICE OF ACCEPTANCE: EVIDENCE SUBMITTED
(For File ONLY. Not part of NOA)

A. DRAWINGS

1. Manufacturer's die drawings and sections.
2. Drawing No. **YHC-300-OG-LI**, titled "YHC-300 O/G Hurricane Curtain Wall Insulated Glazing Large Missile Impact Rated", sheets 1 through 30, prepared by manufacturer, dated 8/5/02, signed, dated and sealed by Walter A. Tillit Jr., P.E. on December 11, 2002.

B. TESTS

1. Test reports on 1) Small Missile Impact Test per SFBC, PA 201-94
   2) Large Missile Impact Test per SFBC, PA 201-94
   3) Cyclic Wind Pressure Loading per SFBC, PA 203-94
   along with marked drawings and installation diagram of unit of O-O, prepared by Hurricane Test Laboratory, Inc., Test Report Job **0231-0401-01** dated 4/11/01, signed and sealed by Vinu J. Abraham, P.E.
2. See NOA 01-0228.09 for additional test reports

C. CALCULATIONS

Structural analysis dated December 10, 2002, prepared signed and sealed by Walter A. Tillit

D. MATERIAL CERTIFICATIONS

Saflex IIIG PVB Polyvinyl Butryal Interlayer, NOA 98-0728.05

E. STATEMENTS

1. Laboratory compliance letter signed by Vinu J. Abraham, P.E., on May 23, 2001.
2. See NOA 01-0228.09 for additional statements

Jaime M. Eisen, P.E.
Product Control Examiner
NOA No 02-1118.01
Expiration Date: March 04, 2006
Approval Date: January 30, 2003

REV.	DESCRIPTION	BY	DATE

YHC-300 O/G HURRICANE CURTAIN WALL INSULATED GLAZING
LARGE MISSILE IMPACT RATED
(SEE SEPARATE NOA FOR SMALL MISSILE AND/OR SINGLE GLAZING)

INDEX OF DRAWINGS

TYPES	CONTENTS	SHEET #
GENERAL	COVER SHT. & GENERAL NOTES	1
ELEVATIONS	ELEVATIONS KEYED TO SINGLE GLAZING DETAILS	2
GEN. DETAILS	TYPICAL SEALANT DETAILS	3
DETAILS FOR SINGLE GLAZING	MULLION DETAILS	4
	TYPICAL INTERMEDIATE HORIZONTAL DETAILS	5
	90° CORNER	6
	HEAD OPTIONS	7
	SILL OPTIONS	8
	STOREFRONT & DOOR	9,10
SECTION & ANCHOR DETAILS	INTERMEDIATE HORIZONTALS	11
	HEAD ANCHOR OPTIONS	12
	SILL ANCHOR OPTIONS	13
	SPLICE & ANCHOR CLIP	14,15,16
	MID-ANCHOR CLIP	17,18,19
	STOREFRONT & DOOR ANCHOR	20
MATERIAL LIST	BILL OF MATERIALS FOR SINGLE GLAZING	21
DESIGN LOAD VERIFICATION CHARTS.	MULLION CHART	22
	ANCHOR BOLT GUIDE -SINGLE SPAN-	23
	ANCHOR BOLT GUIDE -TWIN SPAN-	24
	GLASS CHARTS	25 - 30

GLASS TYPE	DESCRIPTION	NOMINAL THICKNESS	GLASS STR. QUALIFIED	NOTE
A1 A2 A3	5/16" SENTRYGLAS (1/4" GLASS + 0.052" SENTRYGLAS COMPOSITE)	5/16"	A1 = ANNEALED A2 = HEAT STR. A3 = TEMPERED	W/ THE USE OF ADAPTER E9-3141
E1 E2 E3	7/16" SAF-GLAS (3/16" GLASS + 0.070" POLYCARBONATE BY SECURITY IMPACT GLASS + 3/16" GLASS)	7/16"	E1 = ANNEALED E2 = HEAT STR. E3 = TEMPERED	
F1 F2 F3	9/16" SAF-GLAS (1/4" GLASS + 0.070" POLYCARBONATE BY SECURITY IMPACT GLASS + 1/4" GLASS)	9/16"	F1 = ANNEALED F2 = HEAT STR. F3 = TEMPERED	
G	9/16" SAFLEX HP (1/4" GLASS + 0.10" SAFLEX HP BY SOLUTIA + 1/4" GLASS) HEAT STRENTHENED GLASS ONLY).	9/16"	HEAT STR. ONLY	

GENERAL NOTES:

1. MAXIMUM DESIGN PRESSURE RATING IS +90 PSF, -90 PSF.

2. SEE SHEET 22 TO DETERMINE MAX. DESIGN LOAD CAPACITY OF MULLION FOR VARIOUS CONFIGURATIONS AND REINFORCEMENT. THE RESULT SHALL BE USED AS THE SYSTEM MAXIMUM LOAD CAPACITY.

3. REFER TO ANCHOR SCHEDULE ON SHEET 2 FOR ANCHOR TYPE IDENTIFICATION. ALSO, SEE SHEETS 23 & 24 TO VERIFY THE DESIGN LOAD CAPACITY OF VARIOUS ANCHOR BOLTS TO BE USED WITH THE END ANCHORS. RESULTS FROM THIS VERIFICATION SHALL NOT EXCEED THE CAPACITY OF THE SYSTEM AS PREVIOUSLY DETERMINED ON NOTE 2.

4. THIS SYSTEM COMPLIES WITH THE LARGE IMPACT TEST REQUIREMENT PER THE 2001 EDITION OF THE FLORIDA BUILDING CODE AND THEREFORE NO SHUTTERS ARE REQUIRED.

5. ALUMINUM ALLOY ON ALL STRUCTURAL MEMBERS SHALL BE 6063-T5 WITH A MINIMUM YIELD STRENGTH OF 23 KSI. ALL PRODUCTS WITH THE MARKING "YKK AP AMERICA" AND "MIAMI-DADE COUNTY PRODUCT CONTROL APPROVED" ARE IN COMPLIANCE WITH THIS SPECIFICATION FOR STRUCTURAL MEMBERS.

6. SEE SHEET 3 FOR A LISTING OF GLASS TYPES APPROVED TO BE USED WITH THIS PRODUCT.

7. SEE SHEETS 25 TO 30 TO DETERMINE DESIGN LOAD CAPACITY OF VARIOUS TYPES OF GLASS FOR DIFFERENT OPENING SIZES, BASED ON ASTM E-1300.
HOWEVER, OTHER CONSIDERATIONS OF THE BUILDING CODE, REGARDING THE USE OF SAFETY GLASS, ETC. SHALL BE APPLIED AS NECESSARY. ALSO, GLASS MANUFACTURERS SHALL BE CONSULTED FOR THEIR RECOMMENDATIONS.

8. SHOP DRAWINGS PREPARED BASED ON THIS APPROVAL AND TAKING INTO ACCOUNT THE SPECIFIC JOB CONDITIONS, SHALL BE SUBMITTED TO THE BUILDING OFFICIAL AS PART OF THE PERMIT DOCUMENTS.

9. STRUCTURAL STEEL NOTED ON THESE DRAWINGS AS "STEEL BY OTHERS" MUST WITHSTAND THE LOADS IMPOSED BY THE CURTAIN WALL SYSTEM.

10. ALL STEEL IN CONTACT WITH ALUMINUM TO BE PAINTED OR PLATED.

GLASS TYPES APPROVED TO BE USED WITH THIS PRODUCT

(SEE SHEETS 25 TO 30 TO DETERMINE DESIGN LOAD CAPACITY OF A PARTICULAR TYPE OF GLASS FOR DIFFERENT OPENING SIZES)

GLASS TYPE	DESCRIPTION	NOMINAL THICKNESS	GLASS STR. QUALIFIED
I1 I2 I3	1 1/16" INSULATED LAMINATED (1/4" GLASS + 1/2" AIR SPACE + 1/4" GLASS + 0.052" SENTRY GLASS COMPOSITE)	1 1/16"	I1=ANNEALED I2=HEAT STR. I3=TEMPERED
K1 K2 K3	1 3/16" INSULATED SAF-GLAS (1/4" GLASS + 1/2" AIR SPACE + 3/16" GLASS + 0.070 POLYCARBONATE BY SECURITY IMPACT GLASS + 3/16" GLASS)	1 3/16"	K1=ANNEALED K2=HEAT STR. K3=TEMPERED
L1 L2 L3	1 5/16" INSULATED SAF-GLAS (1/4" GLASS + 1/2" AIR SPACE + 1/4" GLASS + 0.070 POLYCARBONATE BY SECURITY IMPACT GLASS + 1/4" GLASS)	1 5/16"	L1=ANNEALED L2=HEAT STR. L3=TEMPERED
M	1 5/16" INSULATED SAFLEX HP (1/4" GLASS + 1/2" AIR SPACE + 1/4" GLASS + 0.100" SAFLEX HP BY SOLUTIA + 1/4" GLASS)	1 5/16"	HEAT STR. ONLY

TILLIT TESTING & ENGINEERING COMPANY
8505 NW 30th STREET, STE. 217
MIAMI, FLORIDA 33166

WALTER A. TILLIT JR., P.E.
STRUCTURAL ENGINEER
FL. LIC.NO. 44197

PRODUCT REVISED
as complying with the Florida Building Code
Acceptance No 02-1118.01
Expiration Date 03/04/06
By
Miami-Dade Product Control Division

RESERVED FOR METRO-DADE USE ONLY

YKK AP AMERICA, INC.
5630 GWALTNEY DRIVE
ATLANTA, GEORGIA 30336

SYSTEM	SCALE
YHC 300 INSULATED GLAZING SYS.	NONE

DESCRIPTION: TABLE OF CONTENTS & NOTES

DRAWING NUMBER	REV.
YHC-300-OG-LI	

APPROVED BY	DRAWN BY	DATE	SHEET NO.
JIA	RTB	8/5/02	1 of 30

G:\SYSDWGS\YHC300OG\DADE\INSULATED\LARGEMISSILE\YHC300p01LI.DWG

REV.	DESCRIPTION	BY	DATE

YHC-300 O/G HURRICANE CURTAIN WALL INSULATED GLAZING
LARGE MISSILE IMPACT RATED
(SEE SEPARATE NOA FOR SMALL MISSILE AND/OR SINGLE GLAZING)

INDEX OF DRAWINGS

TYPES	CONTENTS	SHEET #
GENERAL	COVER SHT. & GENERAL NOTES	1
ELEVATIONS	ELEVATIONS KEYED TO SINGLE GLAZING DETAILS	2
GEN. DETAILS	TYPICAL SEALANT DETAILS	3
DETAILS FOR SINGLE GLAZING	MULLION DETAILS	4
	TYPICAL INTERMEDIATE HORIZONTAL DETAILS	5
	90° CORNER	6
	HEAD OPTIONS	7
	SILL OPTIONS	8
	STOREFRONT & DOOR	9,10
SECTION & ANCHOR DETAILS	INTERMEDIATE HORIZONTALS	11
	HEAD ANCHOR OPTIONS	12
	SILL ANCHOR OPTIONS	13
	SPLICE & ANCHOR CLIP	14,15,16
	MID-ANCHOR CLIP	17,18,19
	STOREFRONT & DOOR ANCHOR	20
MATERIAL LIST	BILL OF MATERIALS FOR SINGLE GLAZING	21
DESIGN LOAD VERIFICATION CHARTS.	MULLION CHART	22
	ANCHOR BOLT GUIDE -SINGLE SPAN-	23
	ANCHOR BOLT GUIDE -TWIN SPAN-	24
	GLASS CHARTS	25 - 30

GLASS TYPE	DESCRIPTION	NOMINAL THICKNESS	GLASS STR. QUALIFIED	NOTE
A1 A2 A3	5/16" SENTRYGLAS (1/4" GLASS + 0.052" SENTRYGLAS COMPOSITE)	5/16"	A1 = ANNEALED A2 = HEAT STR. A3 = TEMPERED	W/ THE USE OF ADAPTER E9-3141
E1 E2 E3	7/16" SAF-GLAS (3/16" GLASS + 0.070" POLYCARBONATE BY SECURITY IMPACT GLASS + 3/16" GLASS)	7/16"	E1 = ANNEALED E2 = HEAT STR. E3 = TEMPERED	
F1 F2 F3	9/16" SAF-GLAS (1/4" GLASS + 0.070" POLYCARBONATE BY SECURITY IMPACT GLASS + 1/4" GLASS)	9/16"	F1 = ANNEALED F2 = HEAT STR. F3 = TEMPERED	
G	9/16" SAFLEX HP (1/4" GLASS + 0.10" SAFLEX HP BY SOLUTIA + 1/4" GLASS) HEAT STRENTHENED GLASS ONLY).	9/16"	HEAT STR. ONLY	

GENERAL NOTES:

1. MAXIMUM DESIGN PRESSURE RATING IS +90 PSF, -90 PSF.

2. SEE SHEET 22 TO DETERMINE MAX. DESIGN LOAD CAPACITY OF MULLION FOR VARIOUS CONFIGURATIONS AND REINFORCEMENT. THE RESULT SHALL BE USED AS THE SYSTEM MAXIMUM LOAD CAPACITY.

3. REFER TO ANCHOR SCHEDULE ON SHEET 2 FOR ANCHOR TYPE IDENTIFICATION. ALSO, SEE SHEETS 23 & 24 TO VERIFY THE DESIGN LOAD CAPACITY OF VARIOUS ANCHOR BOLTS TO BE USED WITH THE END ANCHORS. RESULTS FROM THIS VERIFICATION SHALL NOT EXCEED THE CAPACITY OF THE SYSTEM AS PREVIOUSLY DETERMINED ON NOTE 2.

4. THIS SYSTEM COMPLIES WITH THE LARGE IMPACT TEST REQUIREMENT PER THE 2001 EDITION OF THE FLORIDA BUILDING CODE AND THEREFORE NO SHUTTERS ARE REQUIRED.

5. ALUMINUM ALLOY ON ALL STRUCTURAL MEMBERS SHALL BE 6063-T5 WITH A MINIMUM YIELD STRENGTH OF 23 KSI. ALL PRODUCTS WITH THE MARKING "YKK AP AMERICA" AND "MIAMI-DADE COUNTY PRODUCT CONTROL APPROVED" ARE IN COMPLIANCE WITH THIS SPECIFICATION FOR STRUCTURAL MEMBERS.

6. SEE SHEET 3 FOR A LISTING OF GLASS TYPES APPROVED TO BE USED WITH THIS PRODUCT.

7. SEE SHEETS 25 TO 30 TO DETERMINE DESIGN LOAD CAPACITY OF VARIOUS TYPES OF GLASS FOR DIFFERENT OPENING SIZES, BASED ON ASTM E-1300.
HOWEVER, OTHER CONSIDERATIONS OF THE BUILDING CODE, REGARDING THE USE OF SAFETY GLASS, ETC. SHALL BE APPLIED AS NECESSARY. ALSO, GLASS MANUFACTURERS SHALL BE CONSULTED FOR THEIR RECOMMENDATIONS.

8. SHOP DRAWINGS PREPARED BASED ON THIS APPROVAL AND TAKING INTO ACCOUNT THE SPECIFIC JOB CONDITIONS, SHALL BE SUBMITTED TO THE BUILDING OFFICIAL AS PART OF THE PERMIT DOCUMENTS.

9. STRUCTURAL STEEL NOTED ON THESE DRAWINGS AS "STEEL BY OTHERS" MUST WITHSTAND THE LOADS IMPOSED BY THE CURTAIN WALL SYSTEM.

10. ALL STEEL IN CONTACT WITH ALUMINUM TO BE PAINTED OR PLATED.

GLASS TYPES APPROVED TO BE USED WITH THIS PRODUCT

(SEE SHEETS 25 TO 30 TO DETERMINE DESIGN LOAD CAPACITY OF A PARTICULAR TYPE OF GLASS FOR DIFFERENT OPENING SIZES)

GLASS TYPE	DESCRIPTION	NOMINAL THICKNESS	GLASS STR. QUALIFIED
I1 I2 I3	1 1/16" INSULATED LAMINATED (1/4" GLASS + 1/2" AIR SPACE + 1/4" GLASS + 0.052" SENTRY GLASS COMPOSITE)	1 1/16"	I1=ANNEALED I2=HEAT STR. I3=TEMPERED
K1 K2 K3	1 3/16" INSULATED SAF-GLAS (1/4" GLASS + 1/2" AIR SPACE + 3/16" GLASS + 0.070 POLYCARBONATE BY SECURITY IMPACT GLASS + 3/16" GLASS)	1 3/16"	K1=ANNEALED K2=HEAT STR. K3=TEMPERED
L1 L2 L3	1 5/16" INSULATED SAF-GLAS (1/4" GLASS + 1/2" AIR SPACE + 1/4" GLASS + 0.070 POLYCARBONATE BY SECURITY IMPACT GLASS + 1/4" GLASS)	1 5/16"	L1=ANNEALED L2=HEAT STR. L3=TEMPERED
M	1 5/16" INSULATED SAFLEX HP (1/4" GLASS + 1/2" AIR SPACE + 1/4" GLASS + 0.100" SAFLEX HP BY SOLUTIA + 1/4" GLASS)	1 5/16"	HEAT STR. ONLY

PRODUCT REVISED
as complying with the Florida Building Code
Acceptance No 02-1118.01
Expiration Date 03/04/06
By [illegible]
Miami-Dade Product Control Division

RESERVED FOR METRO-DADE USE ONLY

TILLIT TESTING & ENGINEERING COMPANY
8005 NW 30th STREET, STE. 217
MIAMI, FLORIDA 33166

WALTER A. TILLIT JR., P.E.
STRUCTURAL ENGINEER
FL. LIC.NO. 44167

[illegible]
1/29/02

YKK AP AMERICA, INC.
5630 GWALTNEY DRIVE
ATLANTA, GEORGIA 30336

SYSTEM	SCALE
YHC 300 INSULATED GLAZING SYS.	NONE

DESCRIPTION: TABLE OF CONTENTS & NOTES

DRAWING NUMBER	REV.
YHC-300-OG-LI	

APPROVED BY	DRAWN BY	DATE	SHEET NO.
JIA	RTB	8/5/02	1 of 30

G:\SYSDWGS\YHC300OG\DADE\INSULATED\LARGEMISSILE\YHC300p01LI.DWG

REV.	DESCRIPTION	BY	DATE

YHC 300 O/G SYSTEM – LARGE MISSILE

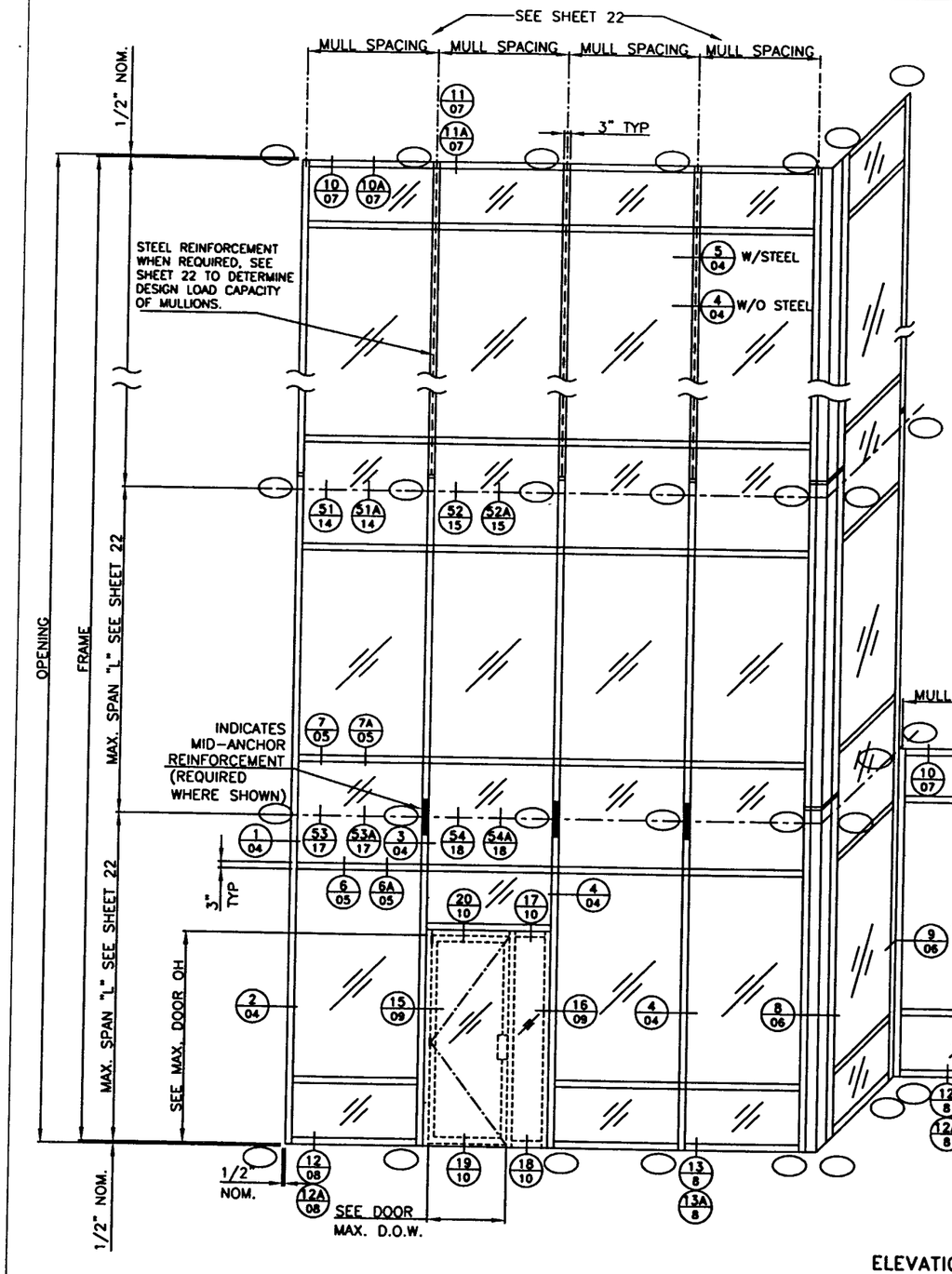

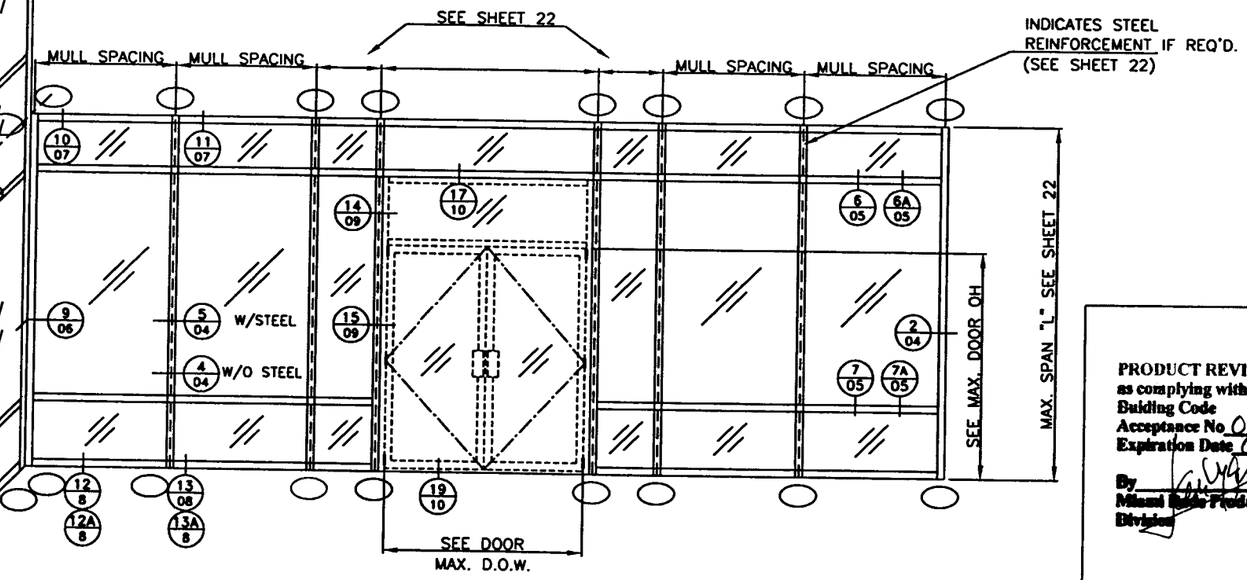

GENERAL NOTES FOR INSULATED GLAZING.

1. DOOR AND STOREFRONT DETAILED HEREIN ARE:
   DOOR; YKK MODEL 35H (PER CURRENT METRO-DADE N.O.A.)
   STOREFRONT; YKK MODEL YHS-50 (PER CURRENT METRO-DADE N.O.A.)
   REFER TO SPECIFIC DOCUMENTS ON THOSE PRODUCTS FOR FURTHER INFORMATION.
2. SEE SHEET 22 TO DETERMINE DESIGN LOAD CAPACITY OF MULLIONS WITH AND W/OUT STEEL REINFORCEMENT.
3. SEE SHEETS 25 TO 30 TO DETERMINE DESIGN LOAD CAPACITY OF VARIOUS TYPES OF GLASS FOR DIFFERENT OPENING SIZES.

ANCHOR SCHEDULE

SYMBOL	DESCRIPTION	TYPICAL USE: SILL ● JAMB	SILL ● MULLION	HEAD ● JAMB	HEAD ● MULLION	INTERM. FLOOR ● JAMB	INTERM. FLOOR ● MULLION	REF. DET'S
J	"J" ANCHOR	●(1)	●(2)					FF/13, GG/13
F	"F" ANCHOR	●		●				BB/12, HH/13
T	"T" ANCHOR		●		●			CC/12, JJ/13
W	WINDLOAD CLIP			●(1)	●(2)	●(1)	●(2)	DD+EE/12, 51/14 52/15, 53A/17
D	DEADLOAD CLIP*					●(1)	●(2)	51A/14, 52A/15 53/17, 54/18

* ONLY ONE DEADLOAD APPLICATION PER MULLION/JAMB SEGMENT. ANY OTHER ANCHOR IN THE SAME SEGMENT SHALL ALLOW FREE MOVEMENT DUE TO THERMAL EXPANSION. SEGMENTS SHALL BE CONNECTED BY MULLION SPLICE AS SHOWN ON SHEETS 14-16

ELEVATION KEYED TO INSULATED GLAZING DETAILS

N.T.S.

PRODUCT REVISED
as complying with the Florida Building Code
Acceptance No. 02-1118.01
Expiration Date 03/04/06
By
Miami Dade Product Control Division

WALTER A. TILLIT JR., P.E.
STRUCTURAL ENGINEER
FL LIC.NO. 41167

12/11/02

TILTECO INC.
TILLIT TESTING & ENGINEERING COMPANY
8595 NW 36th STREET, STE. 217
MIAMI, FLORIDA 33166

RESERVED FOR METRO-DADE USE ONLY

YKK AP AMERICA, INC.
5630 OWALTNEY DRIVE
ATLANTA, GEORGIA 30336

SYSTEM	SCALE
YHC 300 INSULATED GLAZING SYSTEM	AS SHOWN

DESCRIPTION: ELEVATION

DRAWING NUMBER	REV.
YHC-300-OG-LI	

APPROVED BY	DRAWN BY	DATE	SHEET NO.
JIA	RTB	8/5/02	2 OF 30

G:\SYSDWGS\YHC300OG\DADE\INSULATED\LARGEMISSILE\YHC300p02LI.DWG

REV.	DESCRIPTION	BY	DATE

TYPICAL SEALING DETAIL

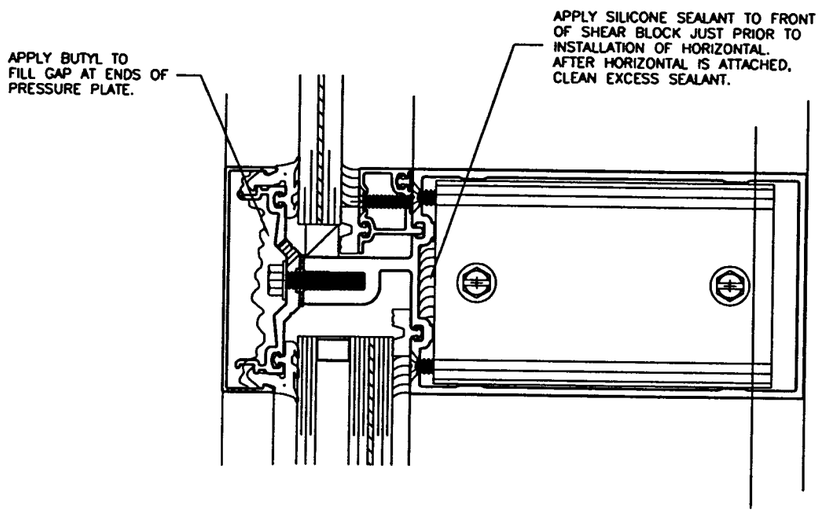

HORIZONTAL TO VERTICAL

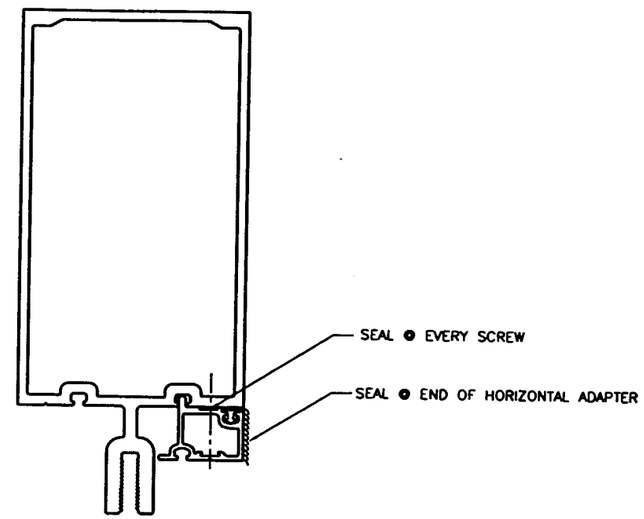

ADAPTER

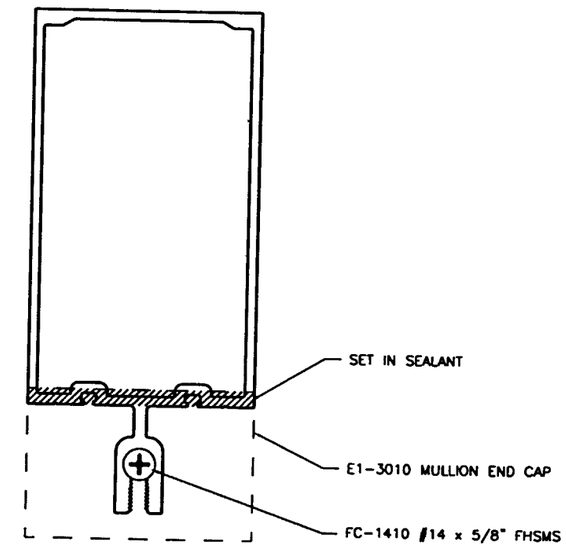

MULLION END CAP

(APPLY BEFORE MULLION ERECTION.)

PRODUCT REVISED
as complying with the Florida Building Code
Acceptance No 02-1118.01
Expiration Date 03/04/06
By [illegible]
Miami-Dade Product Control Division

RESERVED FOR METRO-DADE USE ONLY

WALTER A. TILLIT JR., P.E.
STRUCTURAL ENGINEER
FL LIC.NO. 41167

TILTECO INC.
TILLIT TESTING & ENGINEERING COMPANY
8595 NW 36th STREET, STE. 217
MIAMI, FLORIDA 33166

12/11/02

YKK AP AMERICA, INC.
5630 GWALTNEY DRIVE
ATLANTA, GEORGIA 30336

SYSTEM	SCALE
YHC 300 INSULATED GLAZING SYS.	1/2

DESCRIPTION: TYPICAL SEALING AND GLAZING DETAILS

DRAWING NUMBER	REV.
YHC-300-OG-LI	

APPROVED BY	DRAWN BY	DATE	SHEET NO.
JIA	RTB	8/5/02	3 OF 30

G:\SYSDWGS\YHC300OG\DADE\INSULATED\LARGEMISSILE\YHC300p03LI.DWG

REV.	DESCRIPTION	BY	DATE

WALTER A. TILLIT JR., P.E.
STRUCTURAL ENGINEER
FL. LIC.NO. 43107

TILTECO INC.
TILLIT TESTING & ENGINEERING COMPANY
8595 NW 36th STREET, STE. 217
MIAMI, FLORIDA 33166

12/1/02

NOTE:
1. EXTERIOR GASKET CHART

GL. NOMINAL THICKNESS	USE GASKET
SINGLE GLASS (ADAPTER E9-3141)	
5/16"	E2-0360
7/16"	E2-0352
9/16"	E2-0351
INSULATED GLASS	
1 1/16"	E2-0360
1 3/16"	E2-0352
1 5/16"	E2-0351

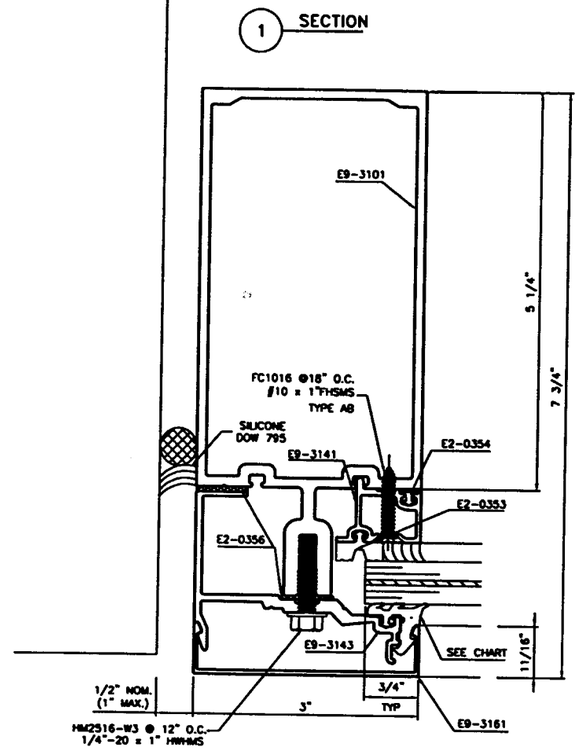

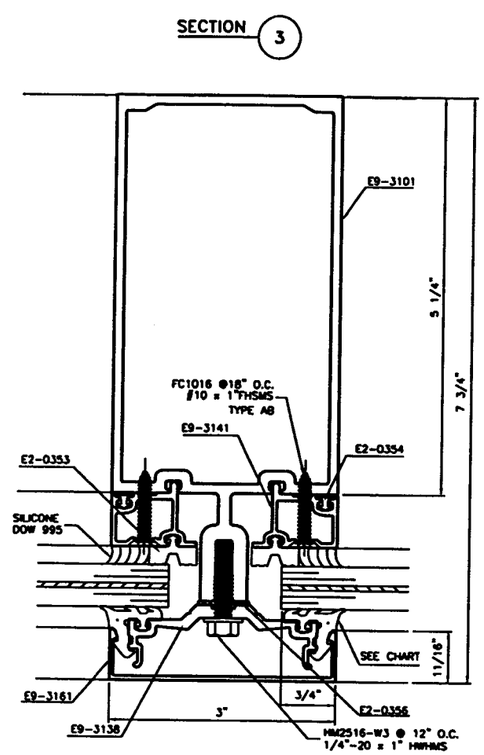

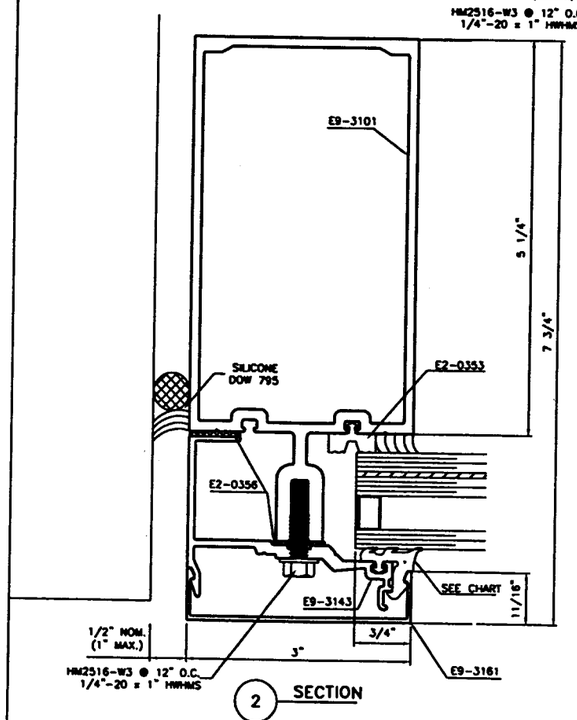

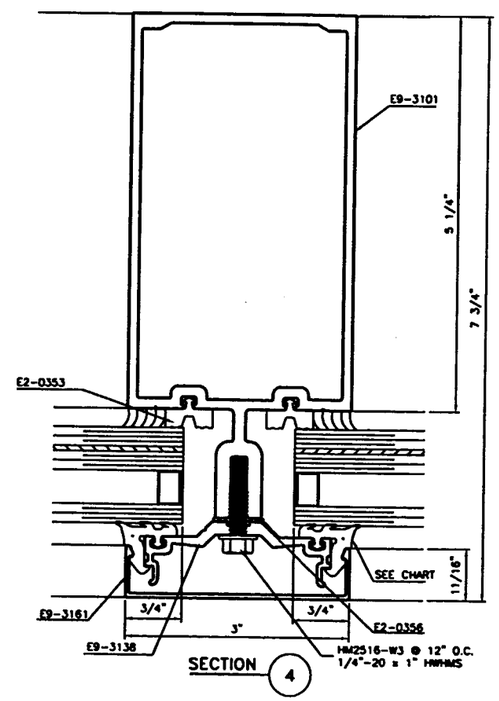

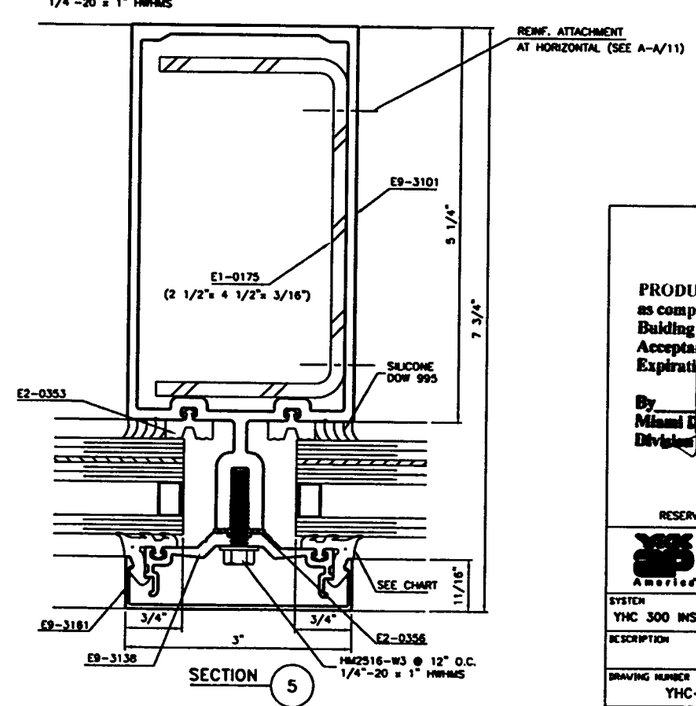

PRODUCT REVISED
as complying with the Florida
Building Code
Acceptance No 02-1118.01
Expiration Date 03/04/06
By
Miami Dade Product Control
Division

RESERVED FOR METRO-DADE USE ONLY

YKK AP AMERICA, INC.
5630 GWALTNEY DRIVE
ATLANTA, GEORGIA 30336

SYSTEM	SCALE
YHC 300 INSULATED GLAZING SYS.	1/2

DESCRIPTION: MULLION DETAILS

DRAWING NUMBER: YHC-300-OG-LI — REV.

APPROVED BY	DRAWN BY	DATE	SHEET NO.
JIA	RTB	8/5/02	4 OF 30

G:\SYSDWGS\YHC3000G\DADE\INSULATED\LARGEMISSILE\YHC300p04LI.DWG

REV.	DESCRIPTION	BY	DATE

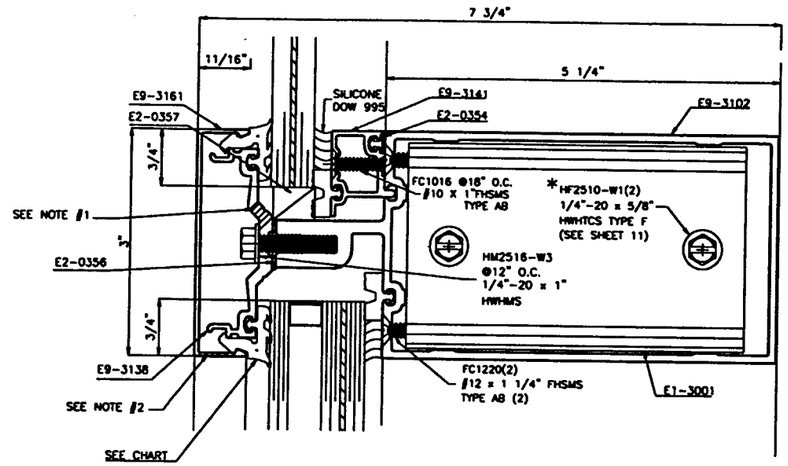

SECTION 6

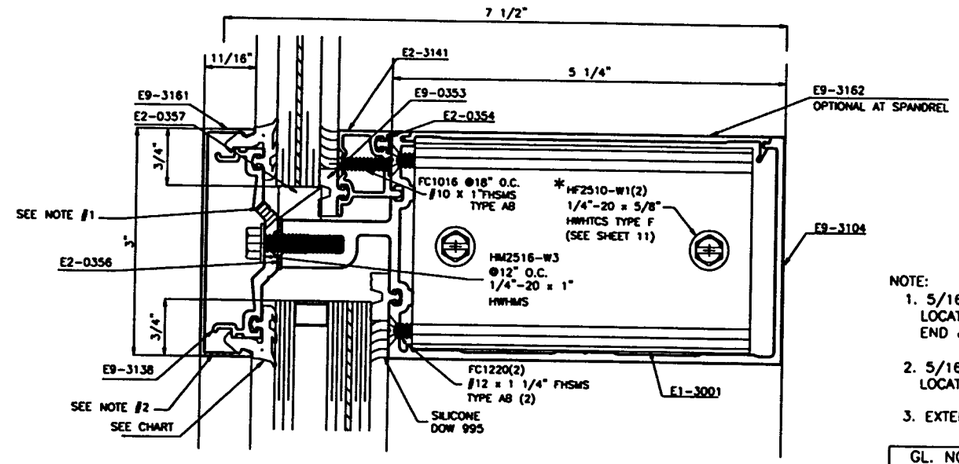

SECTION 6A

NOTE:

1. 5/16" DIA. WEEPHOLE. (3)/HORIZ. LOCATED (1) @ 3" FROM EACH END & (1) @ MID-SPAN.
2. 5/16" DIA. WEEPHOLE. (2)/HORIZ. LOCATED @ 1/3 D.L.O. FROM ENDS.
3. EXTERIOR GASKET CHART

GL. NOMINAL THICKNESS	USE GASKET
SINGLE GLASS (ADAPTER E9-3141)	
5/16"	E2-0360
7/16"	E2-0352
9/16"	E2-0351
INSULATED GLASS	
1 1/16"	E2-0360
1 3/16"	E2-0352
1 5/16"	E2-0351

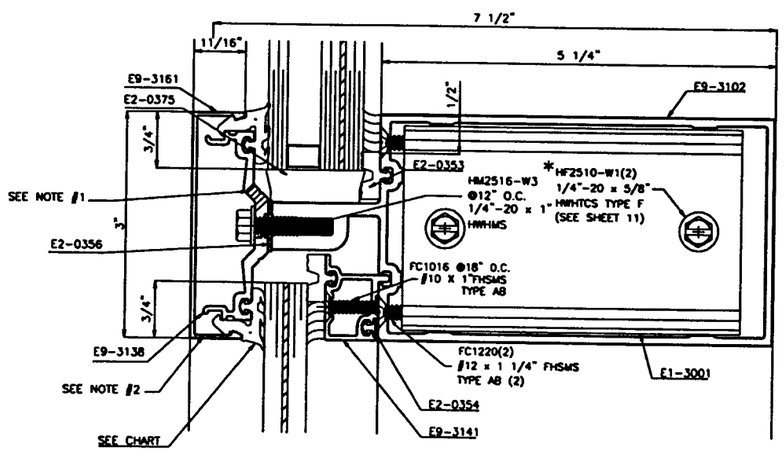

SECTION 7

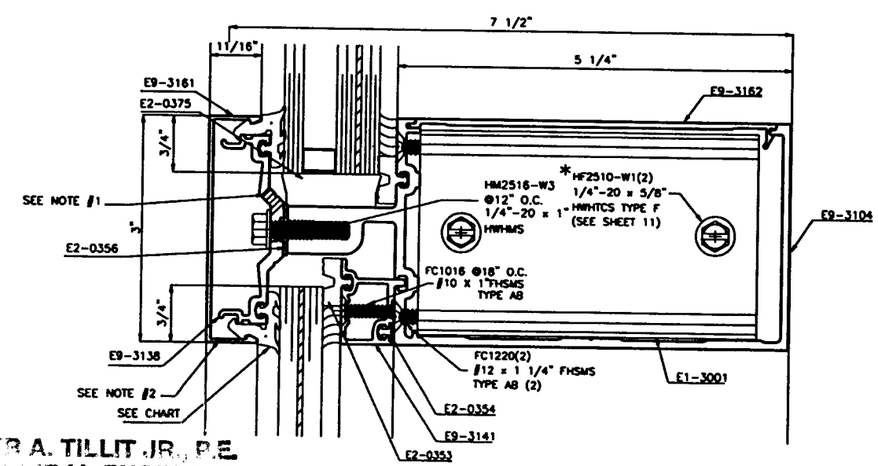

SECTION 7A

WALTER A. TILLIT JR., P.E.
STRUCTURAL ENGINEER
REG. NO. 43167

TILTECO INC.
TILLIT TESTING & ENGINEERING COMPANY
6595 NW 36th STREET, STE. 217
MIAMI, FLORIDA 33166

12/11/02

*REPLACE 5/8" LONG SCREW(HF2510) WITH 1" LONG SCREW(HF2516) FOR ATTACHMENT OF STEEL REINFORCEMENT WHEN STEEL REINFORCEMENT OCCURS. (SEE A-A ON SHT. 11)

PRODUCT REVISED
as complying with the Florida Building Code
Acceptance No. 02-1118.01
Expiration Date 03/04/06
By
Miami Dade Product Control Division

RESERVED FOR METRO-DADE USE ONLY

YKK AP AMERICA, INC.
5630 GWALTNEY DRIVE
ATLANTA, GEORGIA 30336

SYSTEM	SCALE
YHC 300 INSULATED GLAZING SYS.	1/2

DESCRIPTION: INTERMEDIATE HORIZONTAL DETAILS

DRAWING NUMBER	REV.
YHC-300-OG-LI	

APPROVED BY	DRAWN BY	DATE	SHEET NO.
JIA	RTB	8/5/02	5 OF 30

G:\SYSDWGS\YHC3000G\DADE\INSULATED\LARGEMISSILE\YHC300p05LI.DWG

REV.	DESCRIPTION	BY	DATE

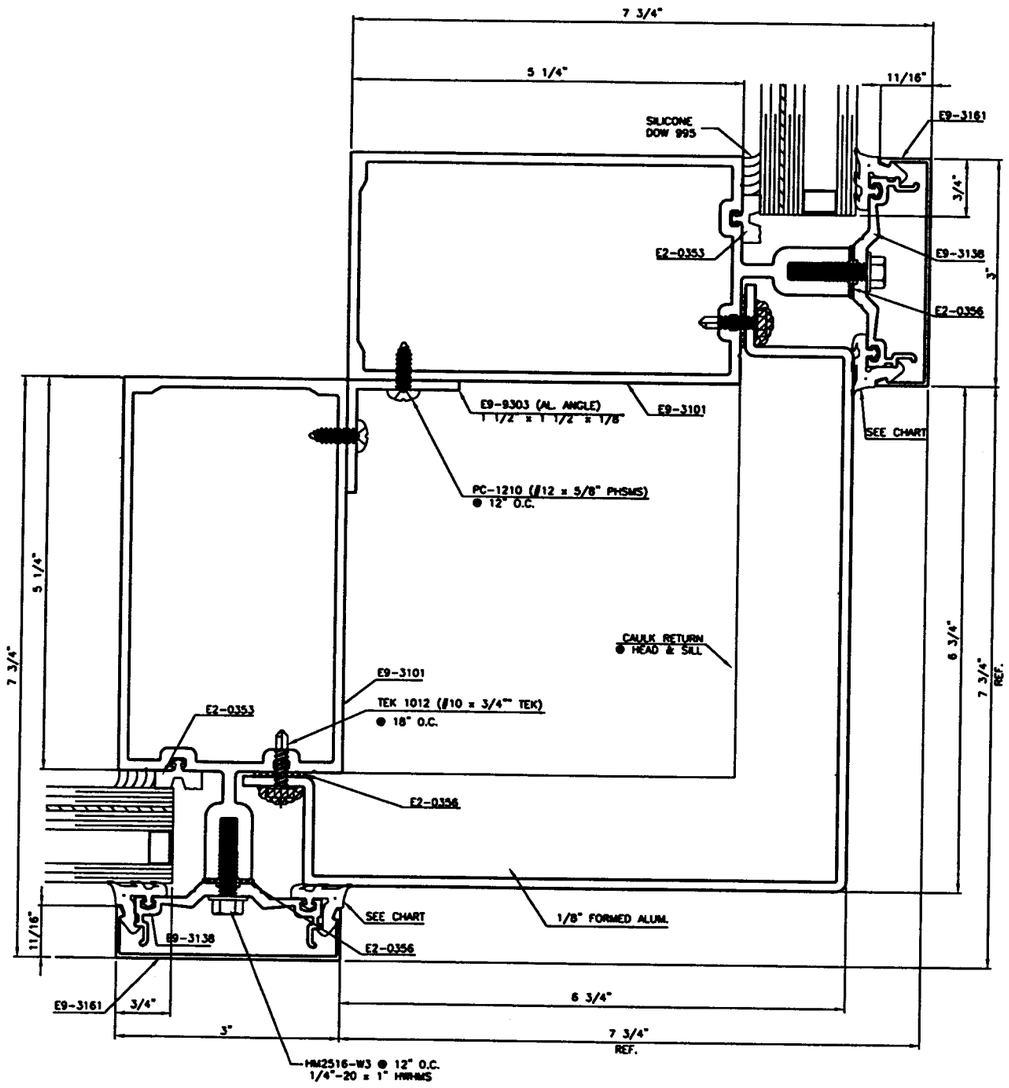

SECTION
OUTSIDE 90° CORNER (8)

NOTE:
1. EXTERIOR GASKET CHART

GL. NOMINAL THICKNESS	USE GASKET
SINGLE GLASS (ADAPTER E9-3141)	
5/16"	E2-0360
7/16"	E2-0352
9/16"	E2-0351
INSULATED GLASS	
1 1/16"	E2-0360
1 3/16"	E2-0352
1 5/16"	E2-0351

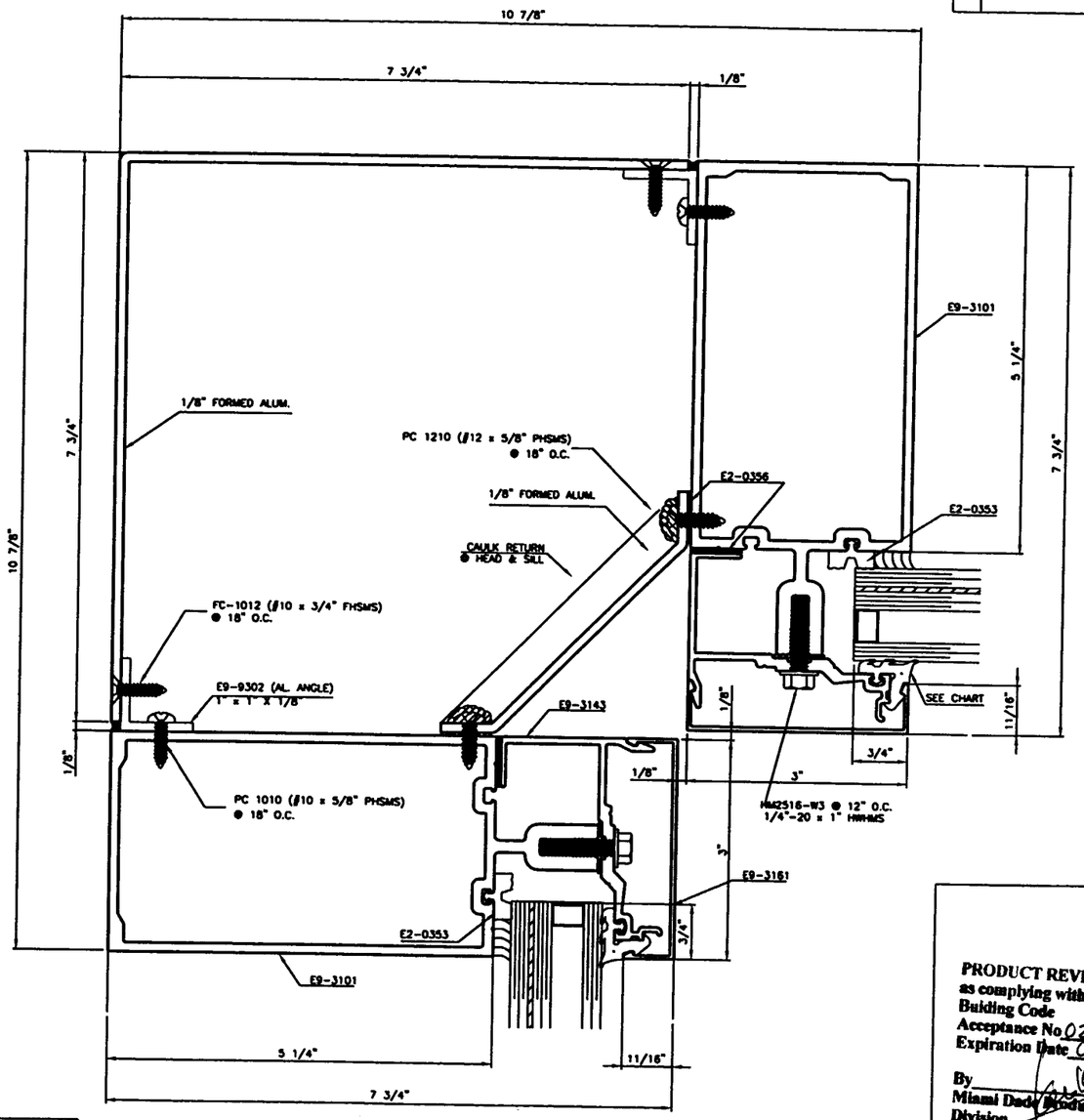

SECTION
INSIDE 90° CORNER (9)

WALTER A. TILLIT JR., P.E.
STRUCTURAL ENGINEER
FLORIDA NO. 43107

TILTECO INC.
TILLIT TESTING & ENGINEERING COMPANY
8595 NW 36th STREET, STE. 217
MIAMI, FLORIDA 33166

12/11/02

PRODUCT REVISED
as complying with the Florida Building Code
Acceptance No. 02-1118.01
Expiration Date 03/04/06
By
Miami Dade Product Control Division

RESERVED FOR METRO-DADE USE ONLY

YKK AP AMERICA, INC.
5630 GWALTNEY DRIVE
ATLANTA, GEORGIA 30336

SYSTEM: YHC 300 INSULATED GLAZING SYS.	SCALE: 1/2
DESCRIPTION: 90° CORNER DETAILS	
DRAWING NUMBER: YHC-300-OG-LI	REV.
APPROVED BY: JIA / DRAWN BY: RTB / DATE: 8/5/02	SHEET NO.: 6 OF 30

G:\SYSDWGS\YHC300OG\DADE\INSULATED\LARGEMISSILE\YHC300p06LI.DWG

REV.	DESCRIPTION	BY	DATE

SECTION 10
SHOWING "F" ANCHOR

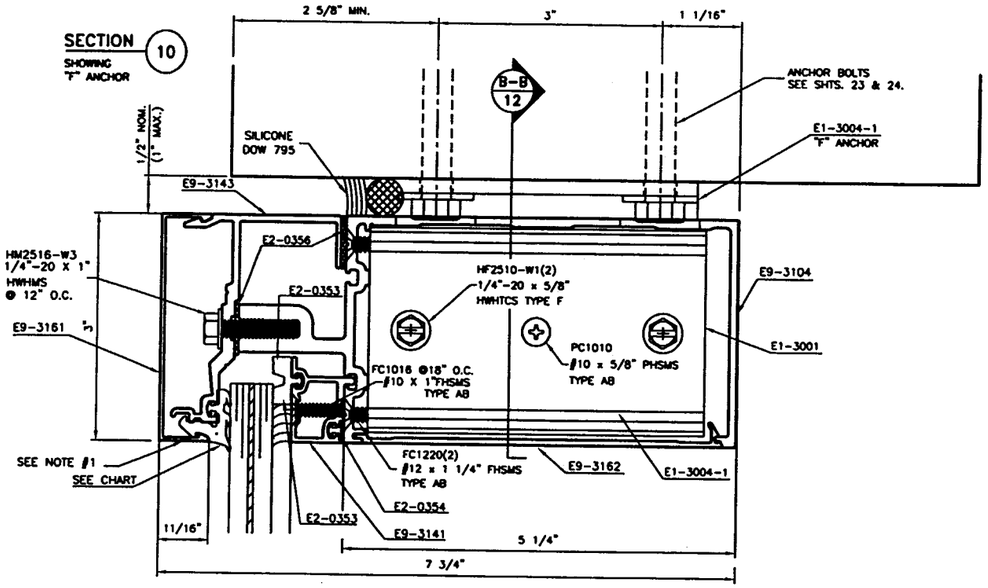

SECTION 11
SHOWING "T" ANCHOR

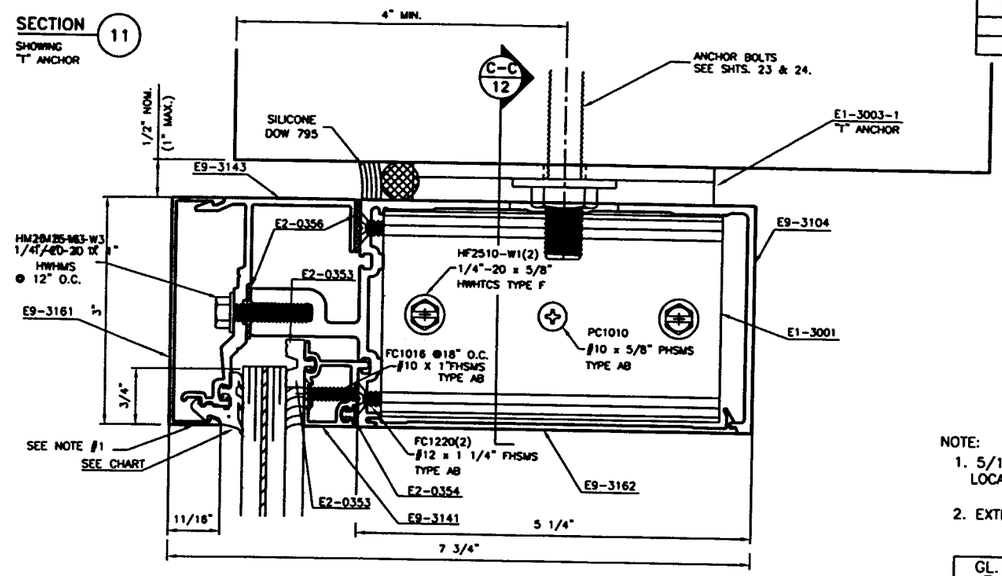

NOTE:
1. 5/16" DIA. WEEPHOLE. (2)/HORIZ. LOCATED @ 1/3 D.L.O. FROM ENDS.
2. EXTERIOR GASKET CHART

GL. NOMINAL THICKNESS	USE GASKET
SINGLE GLASS (ADAPTER E9-3141)	
5/16"	E2-0360
7/16"	E2-0352
9/16"	E2-0351
INSULATED GLASS	
1 1/16"	E2-0360
1 3/16"	E2-0352
1 5/16"	E2-0351

ALTERNATE
SECTION 10A
SHOWING "F" ANCHOR

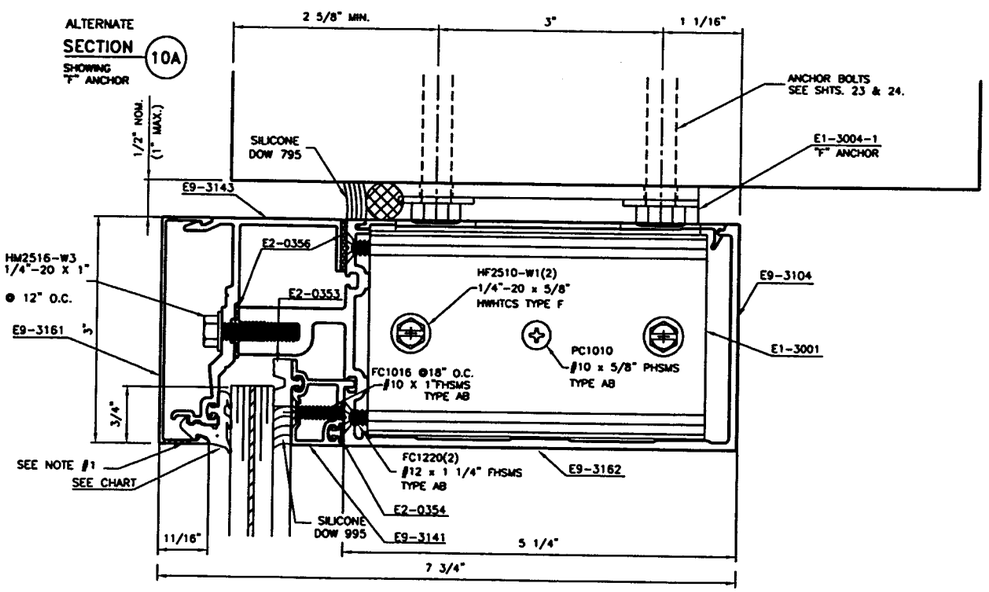

SECTION 11A
SHOWING ANCHOR CLIP

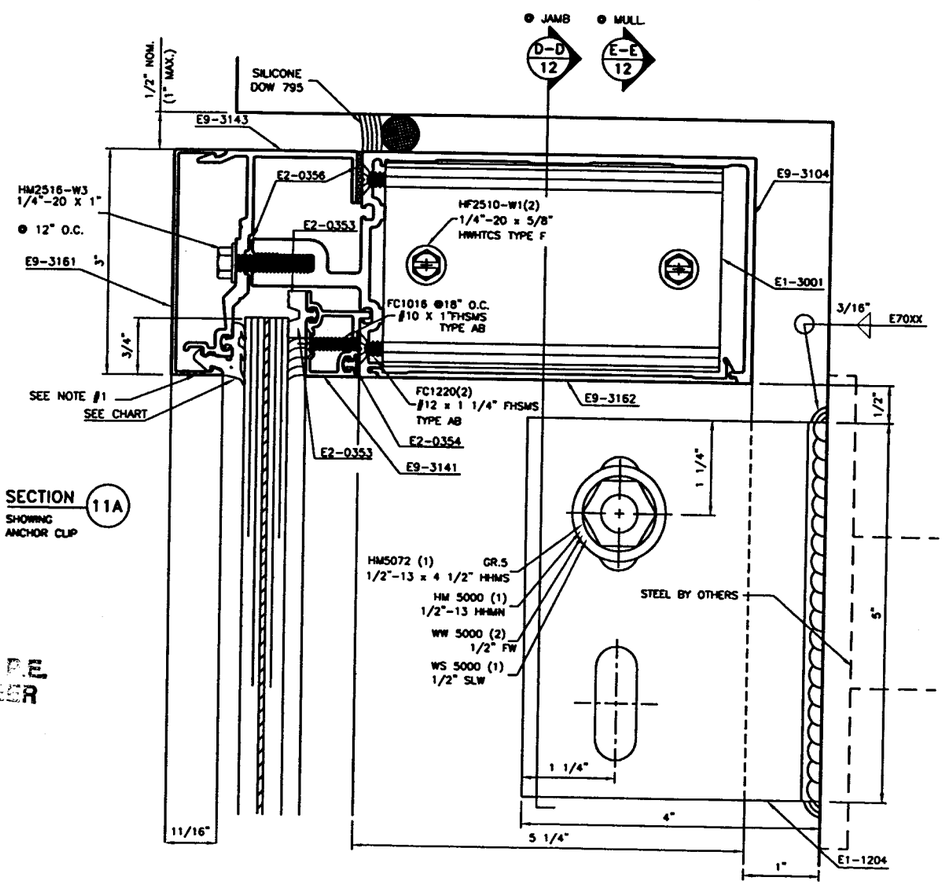

WALTER A. TILLIT JR., P.E.
STRUCTURAL ENGINEER
FL. LIC.NO. 49197

TILLECO INC.
TILLIT TESTING & ENGINEERING COMPANY
8595 NW 36th STREET, STE. 217
MIAMI, FLORIDA 33166

7/11/02

PRODUCT REVISED
as complying with the Florida Buiding Code
Acceptance No 02-1118.01
Expiration Date 03/04/06
By
Miami Dade Product Control Division

RESERVED FOR METRO-DADE USE ONLY

YKK AP America
YKK AP AMERICA, INC.
5630 GWALTNEY DRIVE
ATLANTA, GEORGIA 30336

SYSTEM	SCALE
YHC 300 INSULATED GLAZING SYS.	1/2

DESCRIPTION: HEAD DETAILS

DRAWING NUMBER	REV.
YHC-300-OG-LI	

APPROVED BY	DRAWN BY	DATE	SHEET NO.
JIA	RTB	8/5/02	7 OF 30

G:\SYSDWGS\YHC300OG\DADE\INSULATE\LARGEMISSILE\YHC300p07LI.DWG

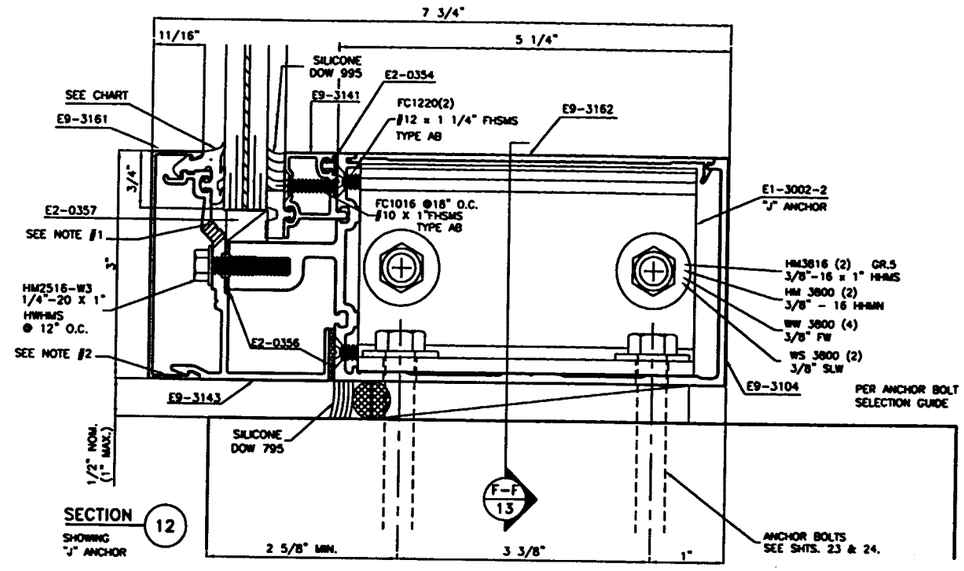

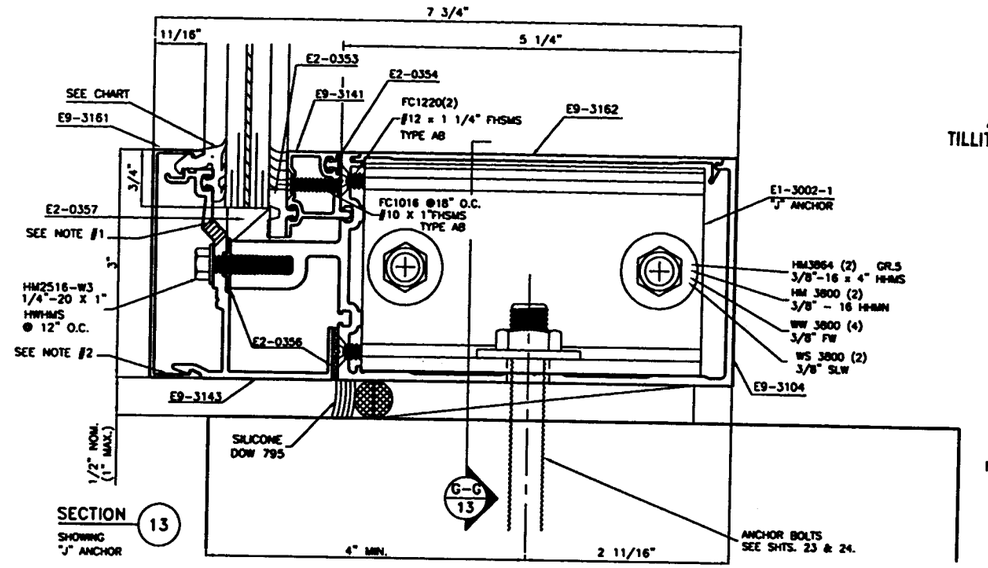

REV.	DESCRIPTION	BY	DATE

TILTECO INC.
TILLIT TESTING & ENGINEERING COMPANY
6595 NW 36th STREET, STE. 217
MIAMI, FLORIDA 33166

WALTER A. TILLIT JR., P.E.
STRUCTURAL ENGINEER
FL. LIC. NO. 42137

12/11/02

NOTE:
1. 5/16" DIA. WEEPHOLE. (3)/HORIZ. LOCATED (1) @ 3" FROM EACH END & (1) @ MID-SPAN.
2. 5/16" DIA. WEEPHOLE. (2)/HORIZ. LOCATED @ 1/3 D.L.O. FROM ENDS.
3. EXTERIOR GASKET CHART

GL. NOMINAL THICKNESS	USE GASKET
SINGLE GLASS (ADAPTER E9-3141)	
5/16"	E2-0360
7/16"	E2-0352
9/16"	E2-0351
INSULATED GLASS	
1 1/16"	E2-0360
1 3/16"	E2-0352
1 5/16"	E2-0351

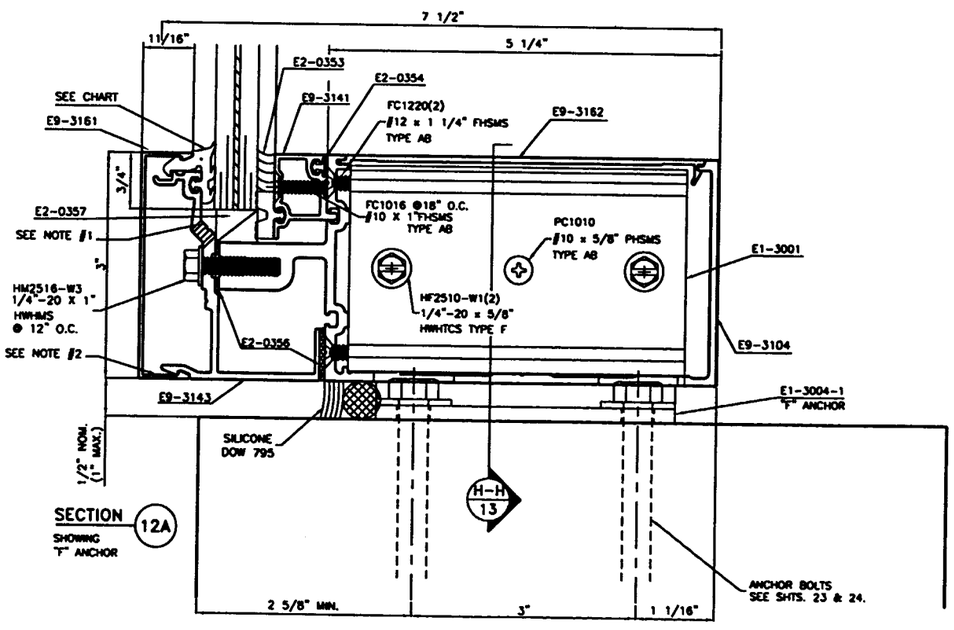

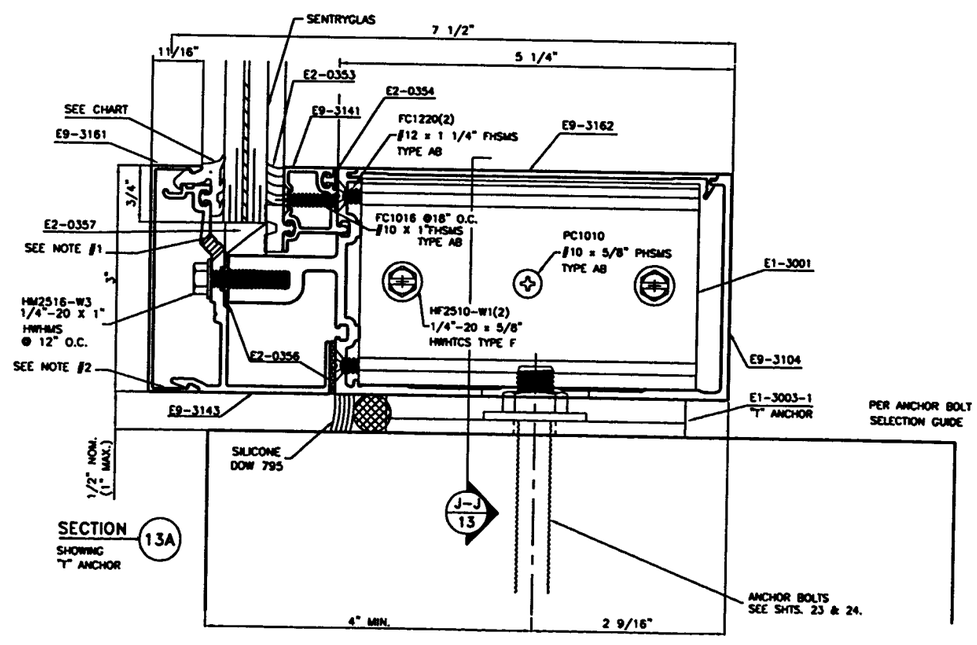

PRODUCT REVISED
as complying with the Florida Buiding Code
Acceptance No. 02-1118.01
Expiration Date 03/04/06
By
Miami-Dade Product Control Division

RESERVED FOR METRO-DADE USE ONLY

YKK AP AMERICA, INC.
5630 GWALTNEY DRIVE
ATLANTA, GEORGIA 30336

SYSTEM	SCALE
YHC 300 INSULATED GLAZING SYS.	1/2
DESCRIPTION: SILL DETAILS	
DRAWING NUMBER: YHC-300-OG-LI	REV.

APPROVED BY	DRAWN BY	DATE	SHEET NO.
JIA	RTB	11/20/01	8 OF 30

G:\SYSDWGS\YHC3000G\DADE\INSULATED\LARGEMISSILE\YHC300p08LI.DWG

REV.	DESCRIPTION	BY	DATE

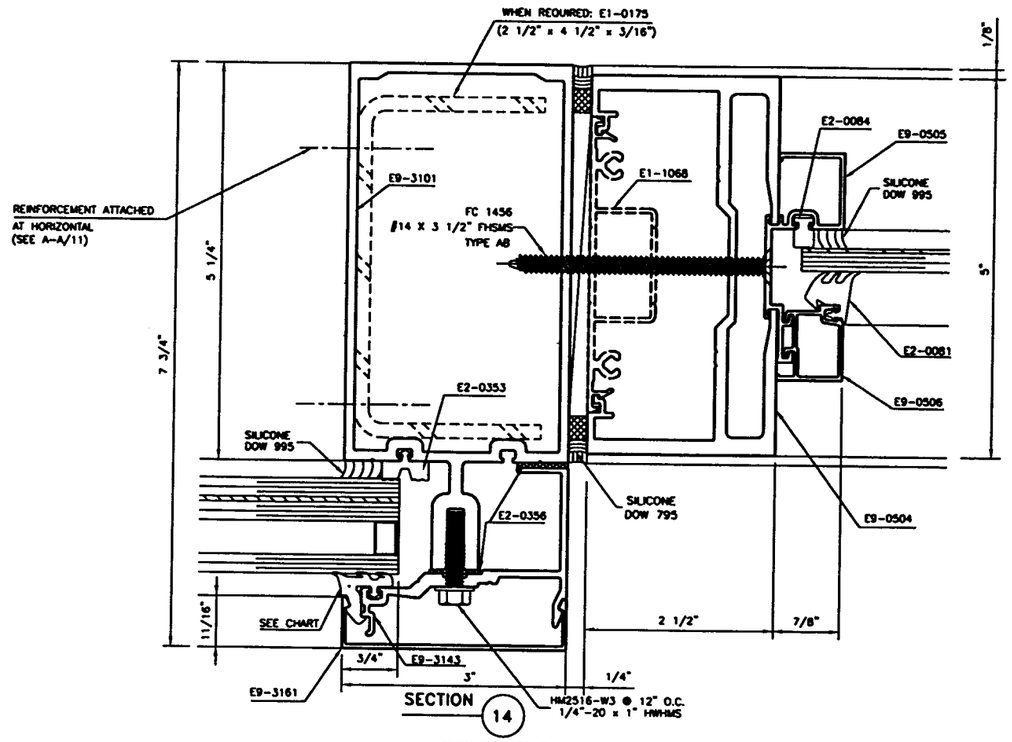

SECTION 14

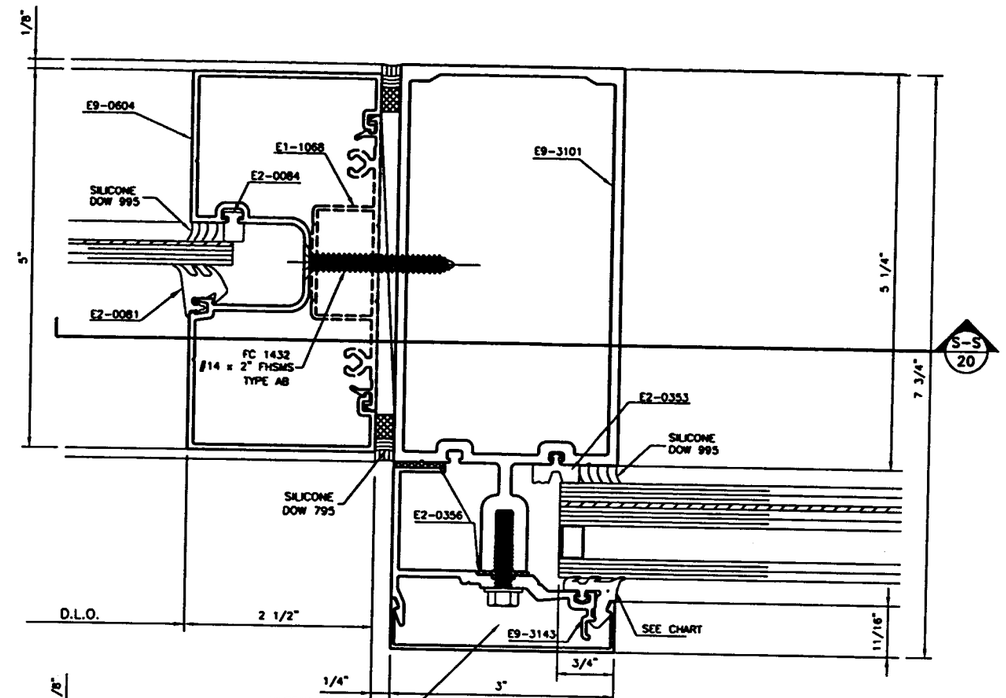

SECTION 16

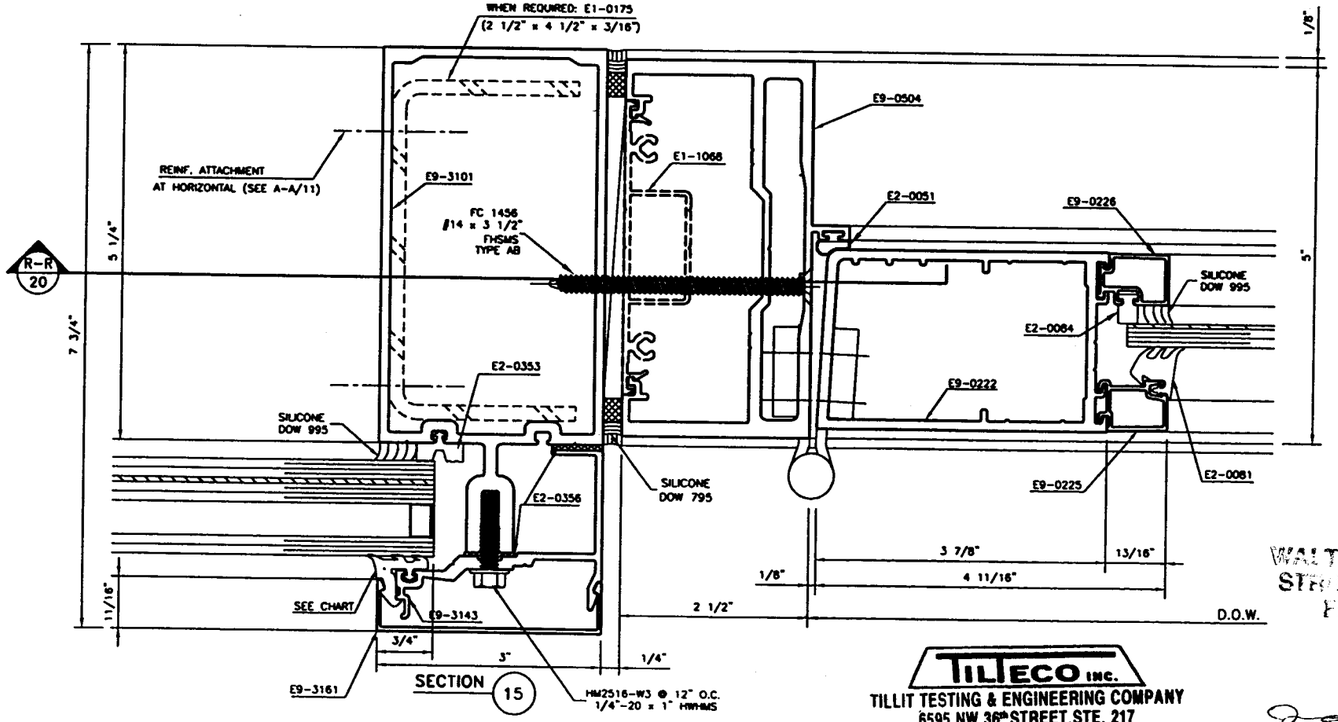

SECTION 15

NOTE:
1. EXTERIOR GASKET CHART

GL. NOMINAL THICKNESS	USE GASKET
SINGLE GLASS (ADAPTER E9-3141)	
5/16"	E2-0360
7/16"	E2-0352
9/16"	E2-0351
INSULATED GLASS	
1 1/16"	E2-0360
1 3/16"	E2-0352
1 5/16"	E2-0351

WALTER A. TILLIT JR., P.E.
STRUCTURAL ENGINEER
REG. NO. 45137

TILTECO INC.
TILLIT TESTING & ENGINEERING COMPANY
6595 NW 36th STREET, STE. 217
MIAMI, FLORIDA 33166

12/11/02

SEE DETAIL OF DOOR AND STOREFRONT IN THE CORRESPONDING NOTICE OF ACCEPTANCE

PRODUCT REVISED
as complying with the Florida Buiding Code
Acceptance No 02-1118.01
Expiration Date 03/04/06
By
Miami Dade Product Control Division

RESERVED FOR METRO-DADE USE ONLY

YKK AP AMERICA, INC.
5630 GWALTNEY DRIVE
ATLANTA, GEORGIA 30336

SYSTEM	SCALE
YHC 300 INSULATED GLAZING SYS.	1/2
DESCRIPTION: STOREFRONT AND DOOR DETAILS	
DRAWING NUMBER: YHC-300-OG-U	REV.

APPROVED BY	DRAWN BY	DATE	SHEET NO.
JIA	RTB	8/5/02	9 OF 30

G:\SYSDWGS\YHC3000G\DADE\INSULATED\LARGEMISSILE\YHC300p09LI.DWG

NOTE:

1. 5/16" DIA. WEEPHOLE. (3)/HORIZ. LOCATED (1) @ 3" FROM EACH END & (1) @ MID-SPAN.
2. 5/16" DIA. WEEPHOLE. (2)/HORIZ. LOCATED @ 1/3 D.L.O. FROM ENDS.
3. EXTERIOR GASKET CHART

GL. NOMINAL THICKNESS	USE GASKET
SINGLE GLASS (ADAPTER E9-3141)	
5/16"	E2-0360
7/16"	E2-0352
9/16"	E2-0351
INSULATED GLASS	
1 1/16"	E2-0360
1 3/16"	E2-0352
1 5/16"	E2-0351

REV.	DESCRIPTION	BY	DATE

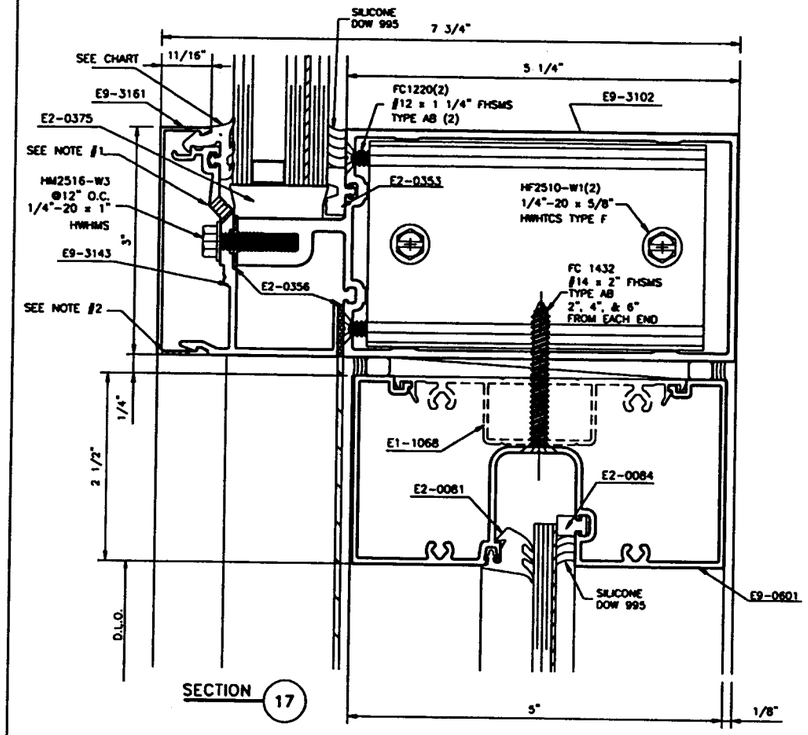

SECTION 17

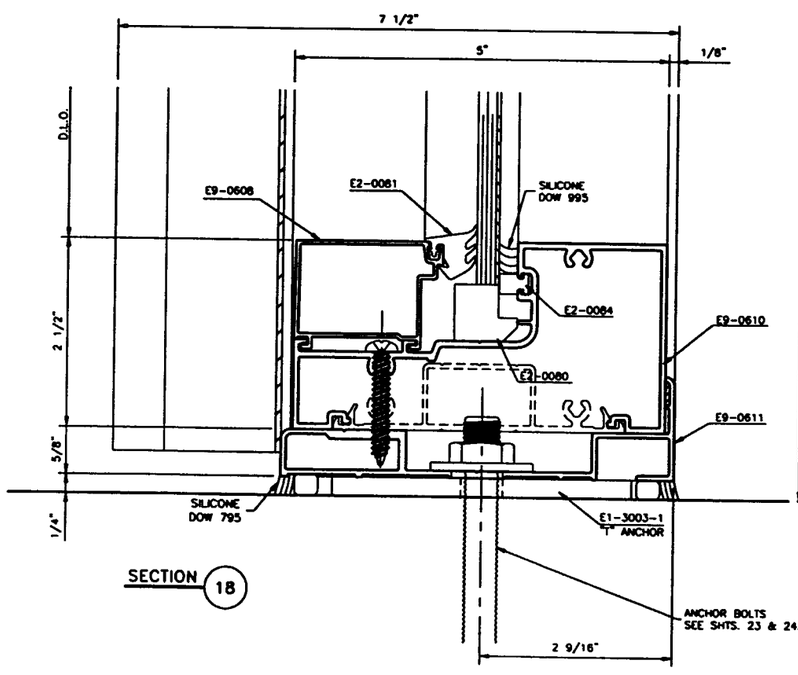

SECTION 18

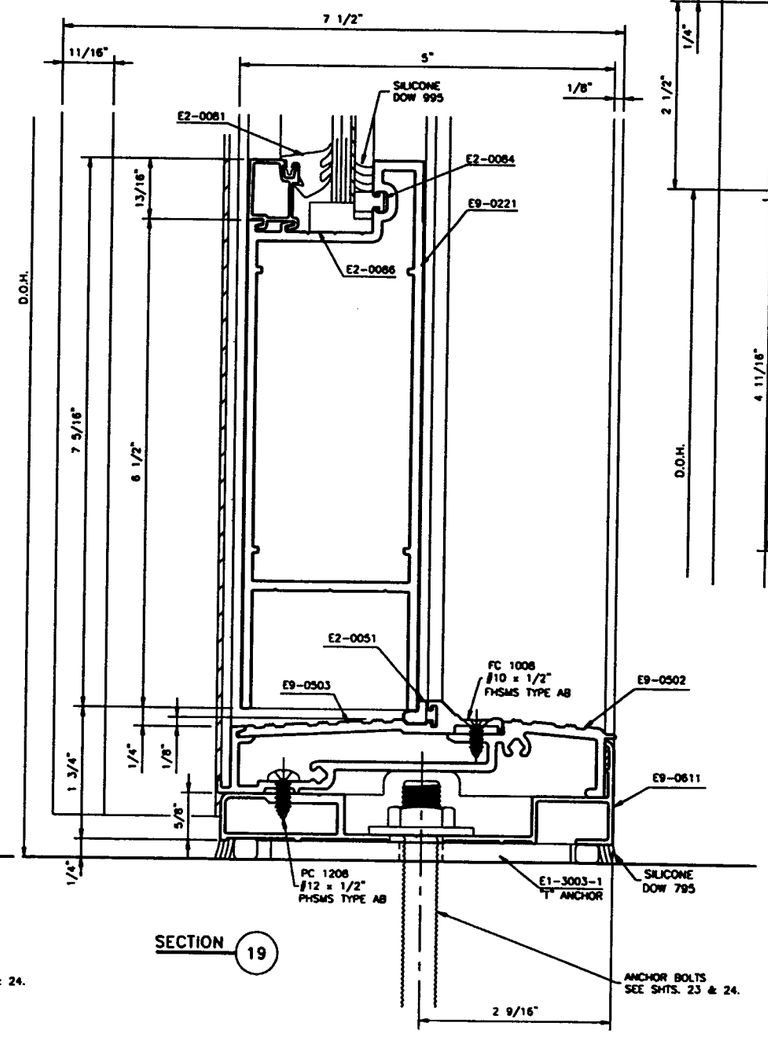

SECTION 19

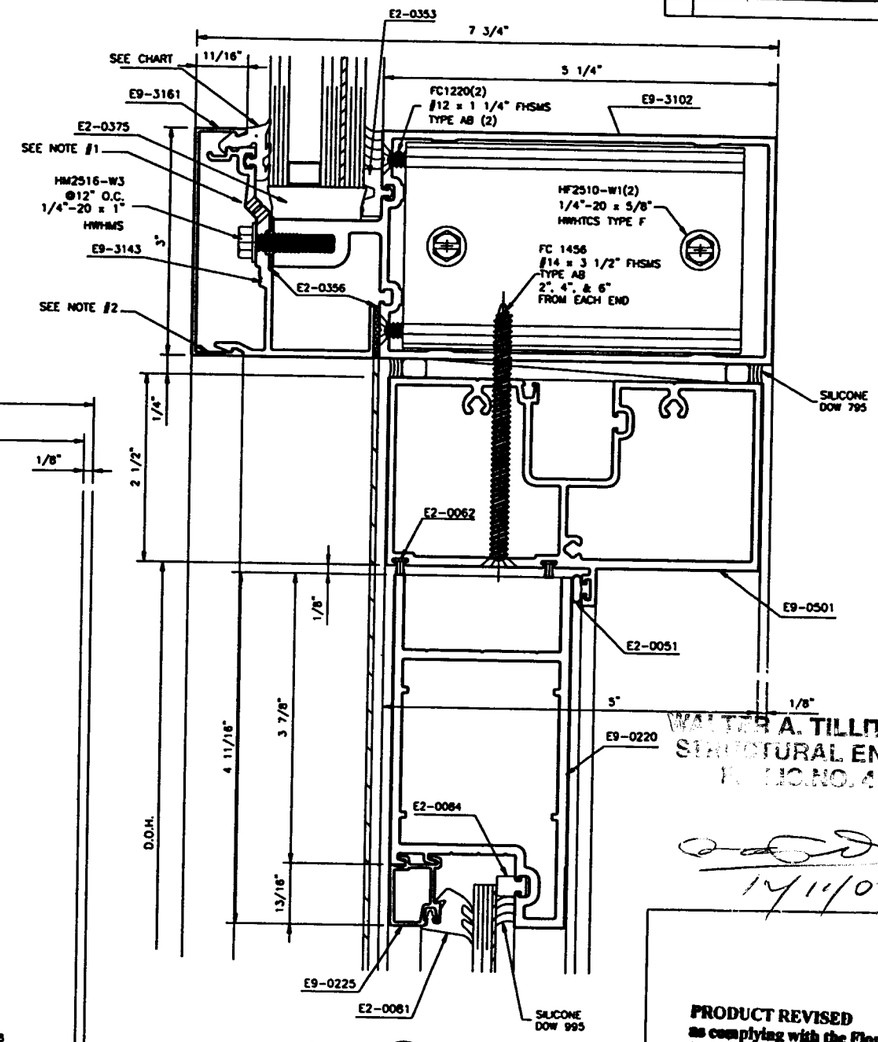

SECTION 20

WALTER A. TILLIT JR., P.E.
STRUCTURAL ENGINEER
FL REG.NO. 47107

12/11/02

PRODUCT REVISED
as complying with the Florida Building Code
Acceptance No 02-1118.01
Expiration Date 03/04/04
By Miami Dade Product Control Division

RESERVED FOR METRO-DADE USE ONLY

TILTECO INC.
TILLIT TESTING & ENGINEERING COMPANY
6595 NW 36th STREET, STE. 217
MIAMI, FLORIDA 33166

SEE DETAIL OF DOOR AND STOREFRONT IN THE CORRESPONDING NOTICE OF ACCEPTANCE

YKK AP AMERICA, INC.
5630 GWALTNEY DRIVE
ATLANTA, GEORGIA 30336

SYSTEM	SCALE
YHC 300 INSULATED GLAZING SYS.	1/2

DESCRIPTION: STOREFRONT AND DOOR DETAILS

DRAWING NUMBER: YHC-300-OG-LI — REV.:

APPROVED BY	DRAWN BY	DATE	SHEET NO.
JIA	RTB	8/5/02	10 OF 30

G:\SYSDWGS\YHC3000G\DADE\INSULATED\LARGEMISSILE\YHC300p10LI.DWG

REV.	DESCRIPTION	BY	DATE

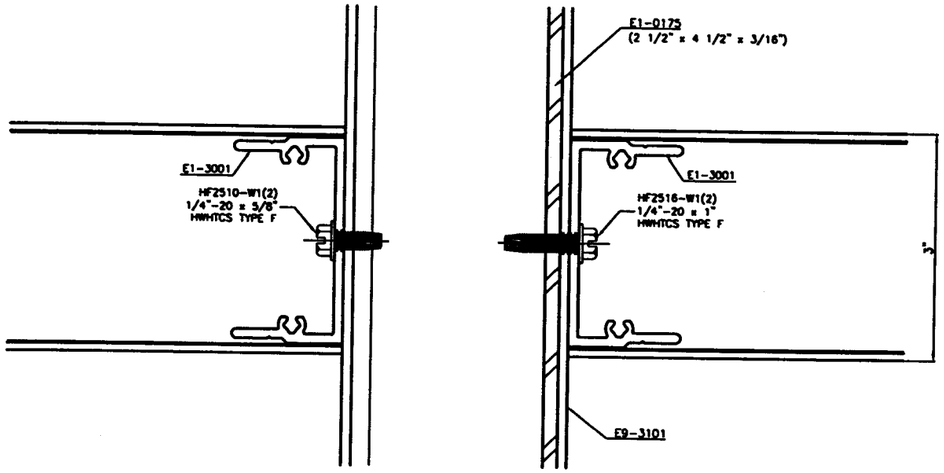

SECTION A-A

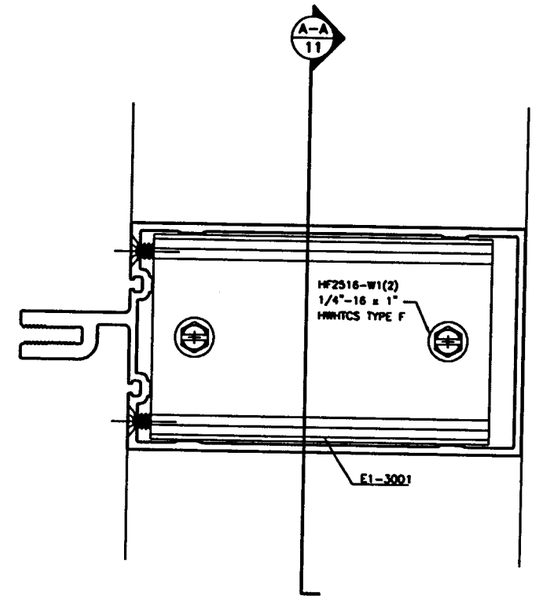

SECTION
CONNECTION "HORIZ.-VERT. W/REINF."

PRODUCT REVISED
as complying with the Florida
Buiding Code
Acceptance No. 02-1118.01
Expiration Date 03/04/06
By
Miami Dade Product Control
Division

RESERVED FOR METRO-DADE USE ONLY

WALTER A. TILLIT JR., P.E.
STRUCTURAL ENGINEER
LICENSE NO. 4[illegible]27

TILTECO INC.
TILLIT TESTING & ENGINEERING COMPANY
6595 NW 36th STREET, STE. 217
MIAMI, FLORIDA 33166

12/11/02

YKK AP AMERICA, INC.
5630 CHALTNEY DRIVE
ATLANTA, GEORGIA 30336

SYSTEM	SCALE
YHC 300 INSULATED GLAZING SYS.	1/2

DESCRIPTION: INTERMEDIATE DETAILS

DRAWING NUMBER: YHC-300-OG-LI — REV.

APPROVED BY	DRAWN BY	DATE	SHEET NO.
JIA	RTB	8/5/02	11 OF 30

G:\SYSDWGS\YHC300OG\DADE\INSULATED\LARGEMISSLE\YHC300p11LI.DWG

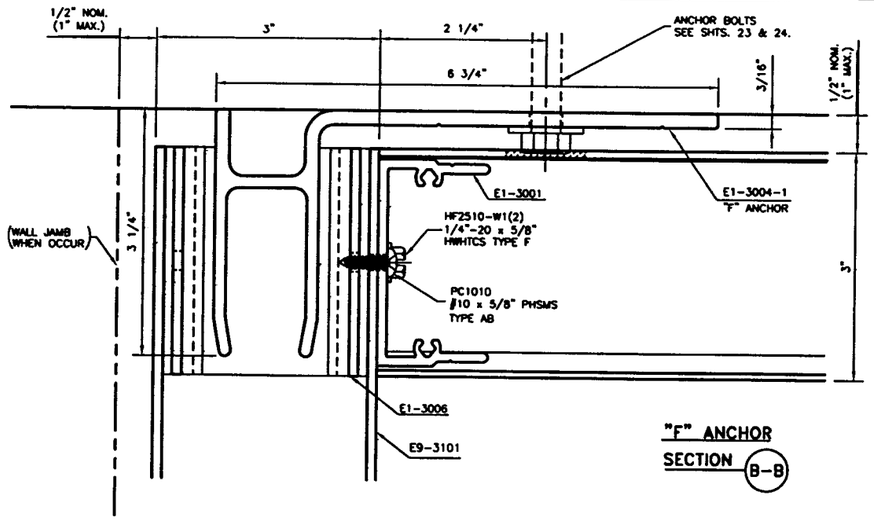

"F" ANCHOR SECTION (B-B)

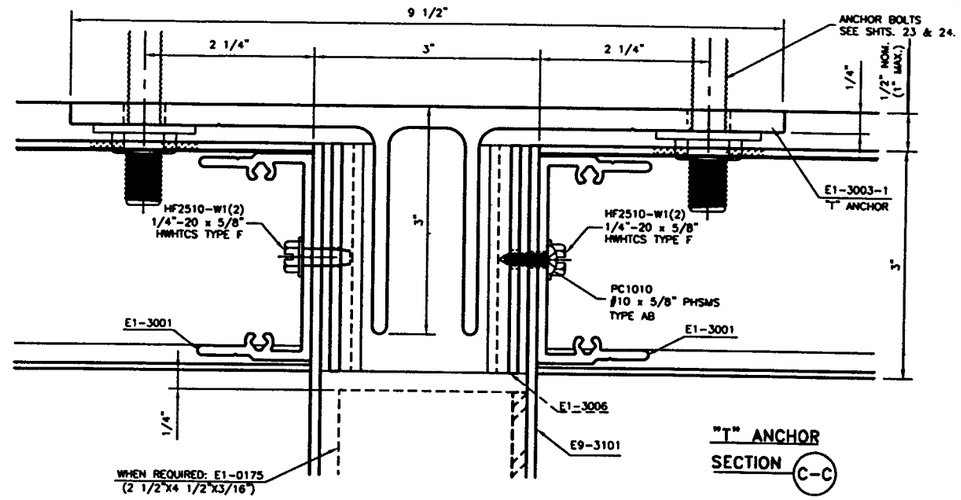

"T" ANCHOR SECTION (C-C)

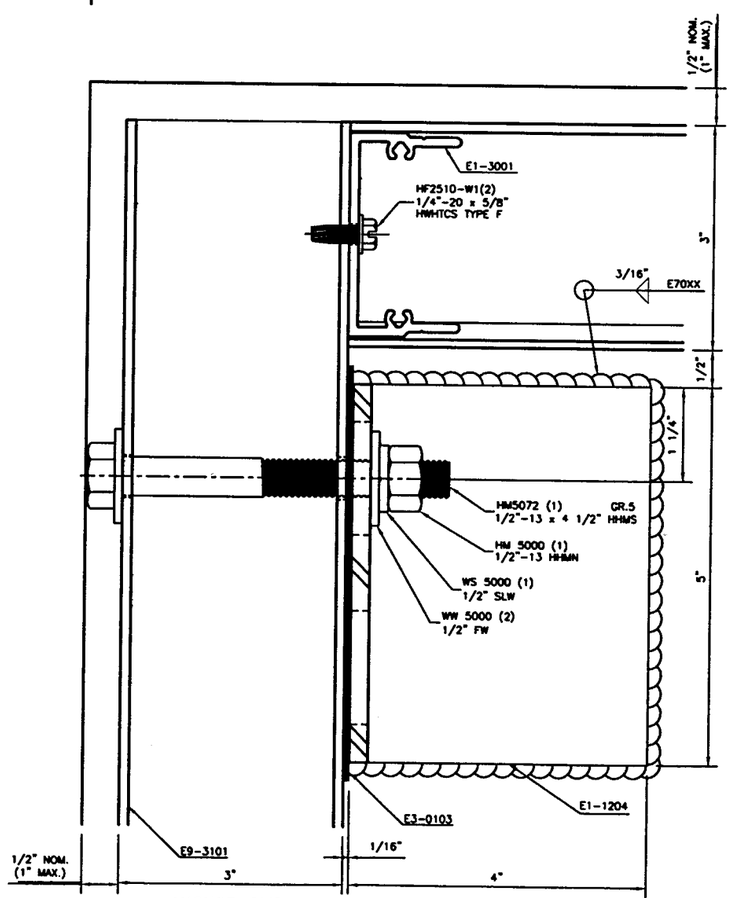

ANCHOR CLIP SECTION (D-D) @ JAMB

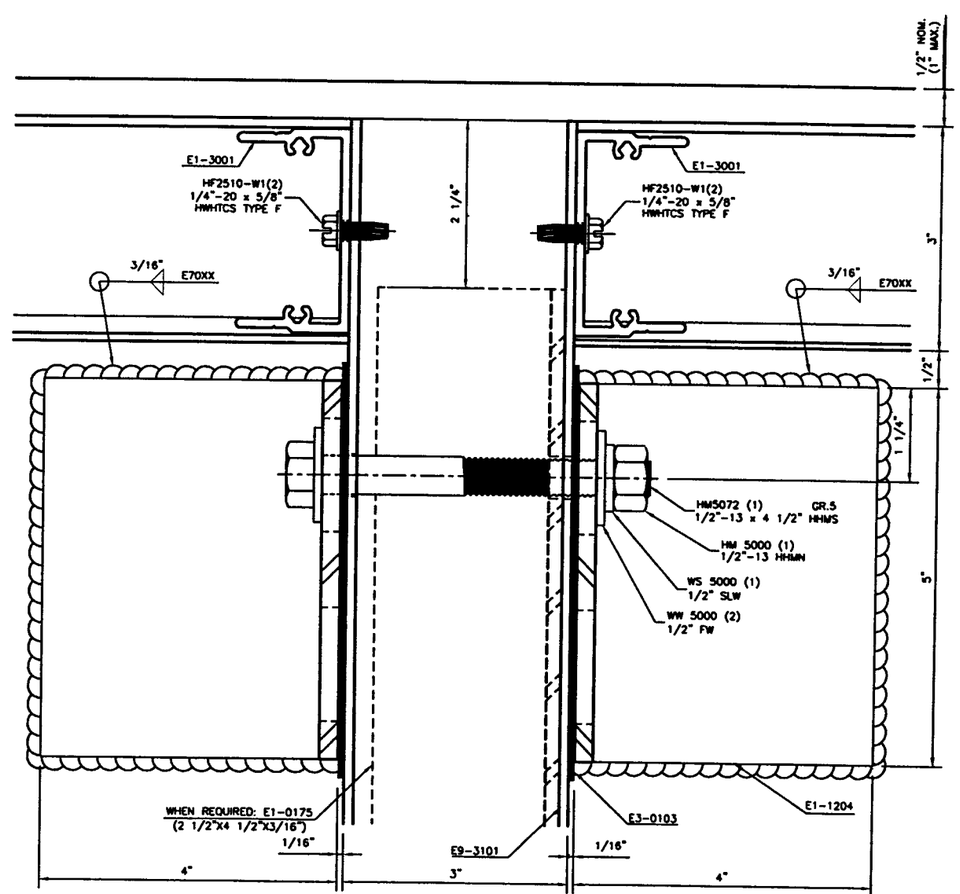

ANCHOR CLIP SECTION (E-E) @ MULL.

REV.	DESCRIPTION	BY	DATE

TILTECO INC.
TILLIT TESTING & ENGINEERING COMPANY
6595 NW 36th STREET, STE. 217
MIAMI, FLORIDA 33166

WALTER A. TILLIT JR., P.E.
STRUCTURAL ENGINEER
FL LIC. NO. 41137

12/11/02

PRODUCT REVISED
as complying with the Florida Building Code
Acceptance No. 02-1118.01
Expiration Date 03/04/06
By
Miami Dade Product Control Division

RESERVED FOR METRO-DADE USE ONLY

YKK AP America
YKK AP AMERICA, INC.
5630 GWALTNEY DRIVE
ATLANTA, GEORGIA 30336

SYSTEM	SCALE
YHC 300 INSULATED GLAZING SYS.	1/2

DESCRIPTION: HEAD ANCHOR DETAILS

DRAWING NUMBER: YHC-300-OG-LI — REV.:

APPROVED BY	DRAWN BY	DATE	SHEET NO.
JIA	RTB	8/5/02	12 OF 30

G:\SYSDWGS\YHC300OG\DADE\INSULATED\LARGEMISSILE\YHC300p12LI.DWG

REV.	DESCRIPTION	BY	DATE

"J" ANCHOR SECTION F-F

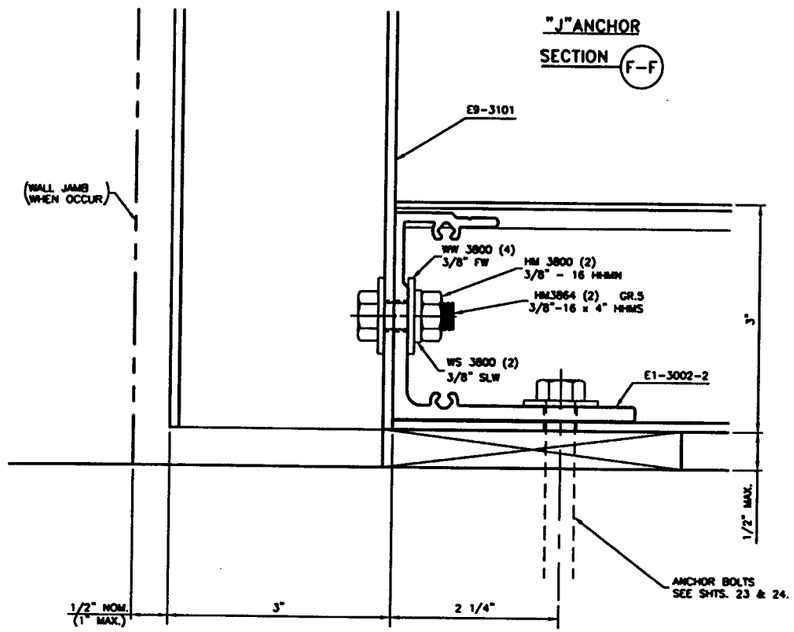

"J" ANCHOR SECTION G-G

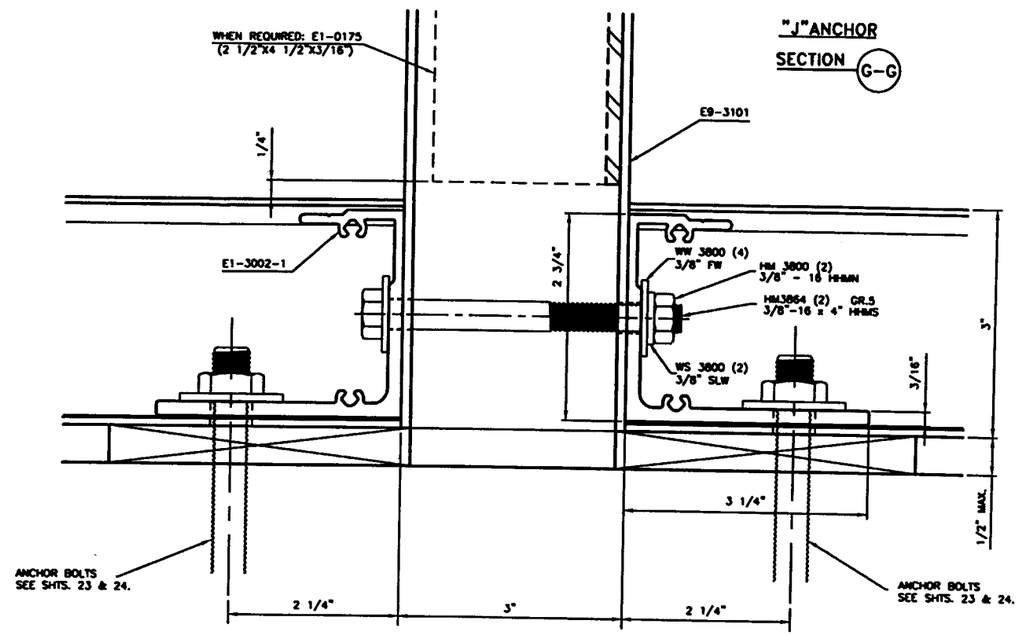

TILTECO INC.
TILLIT TESTING & ENGINEERING COMPANY
6595 NW 36th STREET, STE. 217
MIAMI, FLORIDA 33166

WALTER A. TILLIT JR., P.E.
STRUCTURAL ENGINEER
FL LICENSE NO. 41007

12/11/02

"F" ANCHOR SECTION H-H

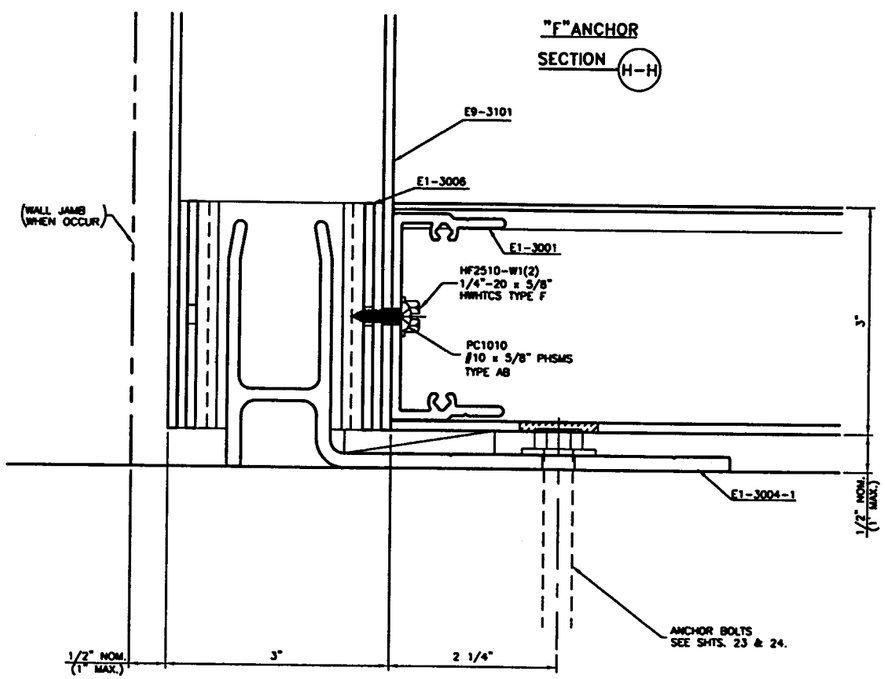

"T" ANCHOR SECTION J-J

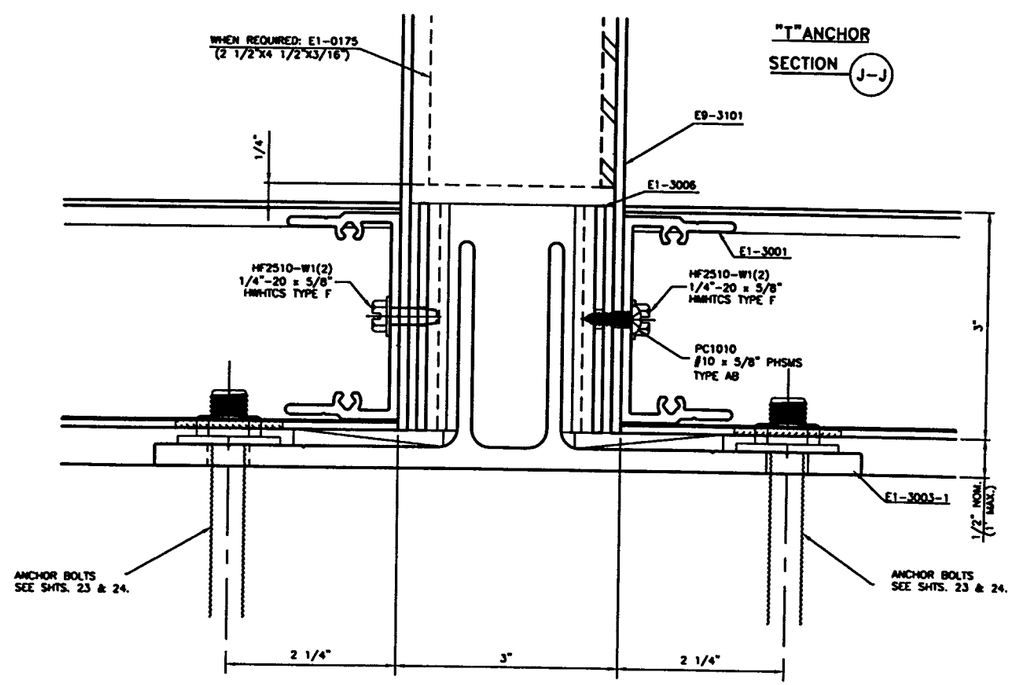

PRODUCT REVISED
as complying with the Florida Building Code
Acceptance No. 02-1118.01
Expiration Date 03/04/06
By _____
Miami Dade Product Control Division

RESERVED FOR METRO-DADE USE ONLY

YKK AP AMERICA, INC.
5630 GWALTNEY DRIVE
ATLANTA, GEORGIA 30336

SYSTEM	SCALE
YHC 300 INSULATED GLAZING SYS.	1/2

DESCRIPTION: SILL ANCHOR DETAILS

DRAWING NUMBER	REV.
YHC-300-OG-LI	

APPROVED BY	DRAWN BY	DATE	SHEET NO.
JIA	RTB	8/5/02	13 OF 30

G:\SYSDWGS\YHC3000G\DADE\INSULATED\LARGEMISSILE\YHC300p13LI.DWG

REV.	DESCRIPTION	BY	DATE

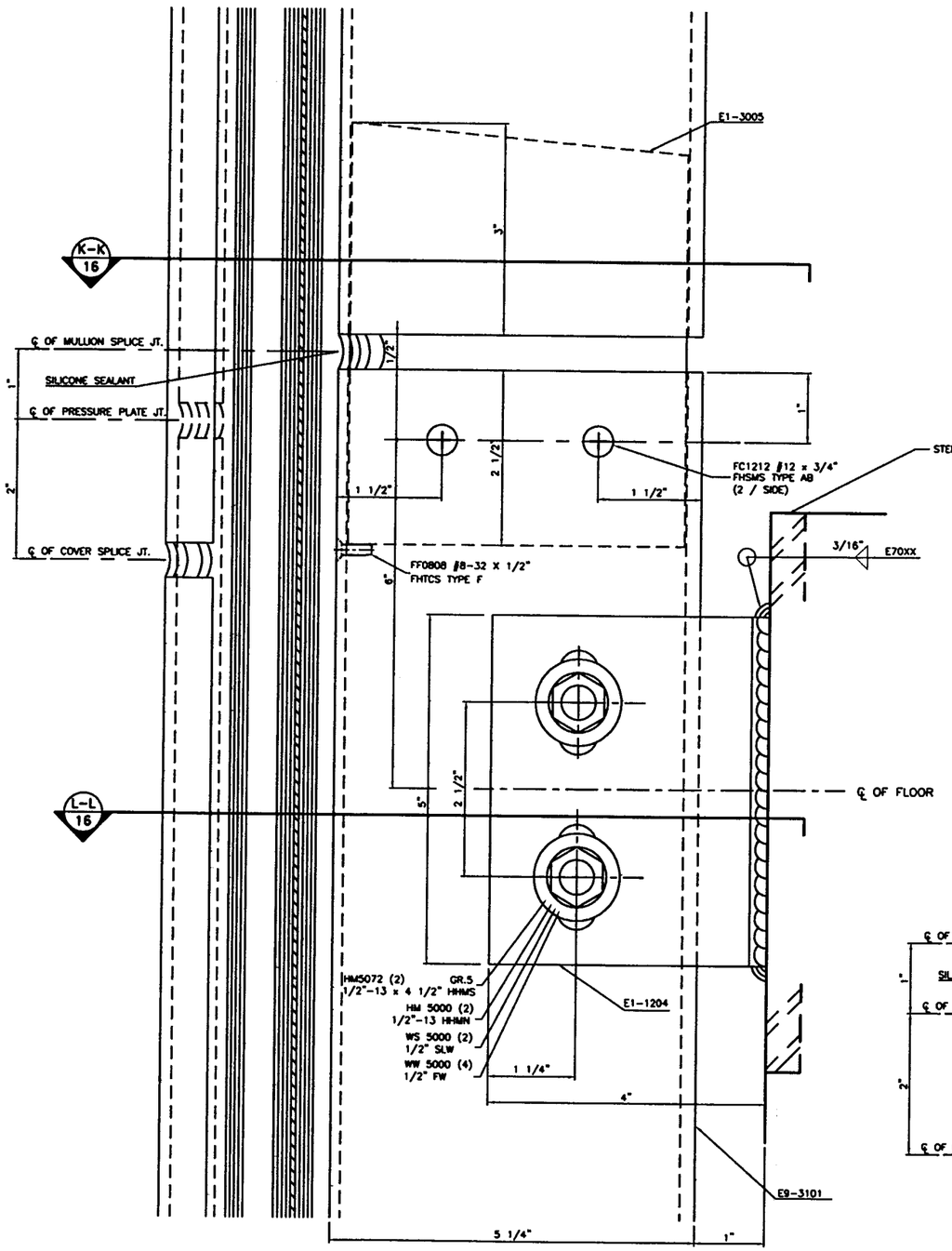

SPLICE & WINDLOAD ANCHOR CLIP

DETAIL 51
JAMB

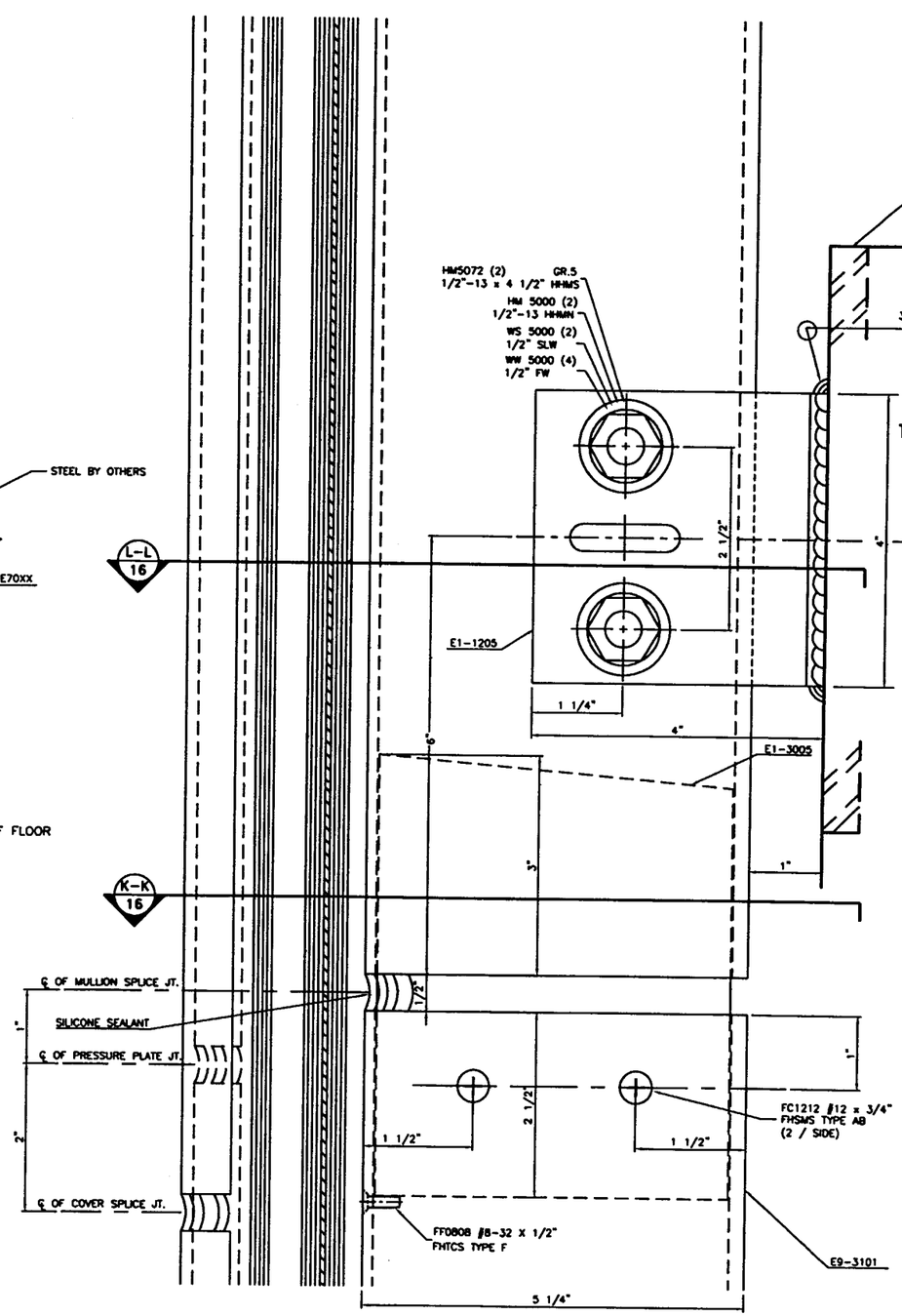

SPLICE & DEADLOAD ANCHOR CLIP

DETAIL 51A
JAMB

TILTECO INC.
TILLIT TESTING & ENGINEERING COMPANY
6595 NW 36th STREET, STE. 217
MIAMI, FLORIDA 33166

WALTER A. TILLIT JR., P.E.
STRUCTURAL ENGINEER
FL LIC. NO. 41197

12/11/02

PRODUCT REVISED
as complying with the Florida Building Code
Acceptance No. 02-1118.01
Expiration Date 03/04/06
By [illegible]
Miami Dade Product Control Division

RESERVED FOR METRO-DADE USE ONLY

YKK AP America

YKK AP AMERICA, INC.
5630 GWALTNEY DRIVE
ATLANTA, GEORGIA 30336

SYSTEM	SCALE
YHC 300 INSULATED GLAZING SYS.	1/2

DESCRIPTION: SPLICE AND ANCHOR CLIP DETAILS

DRAWING NUMBER	REV.
YHC-300-OG-LI	

APPROVED BY	DRAWN BY	DATE	SHEET NO.
JIA	RTB	8/5/02	14 OF 30

G:\SYSDWGS\YHC3000G\DADE\INSULATED\LARGEMISSLE\YHC300p14LI.DWG

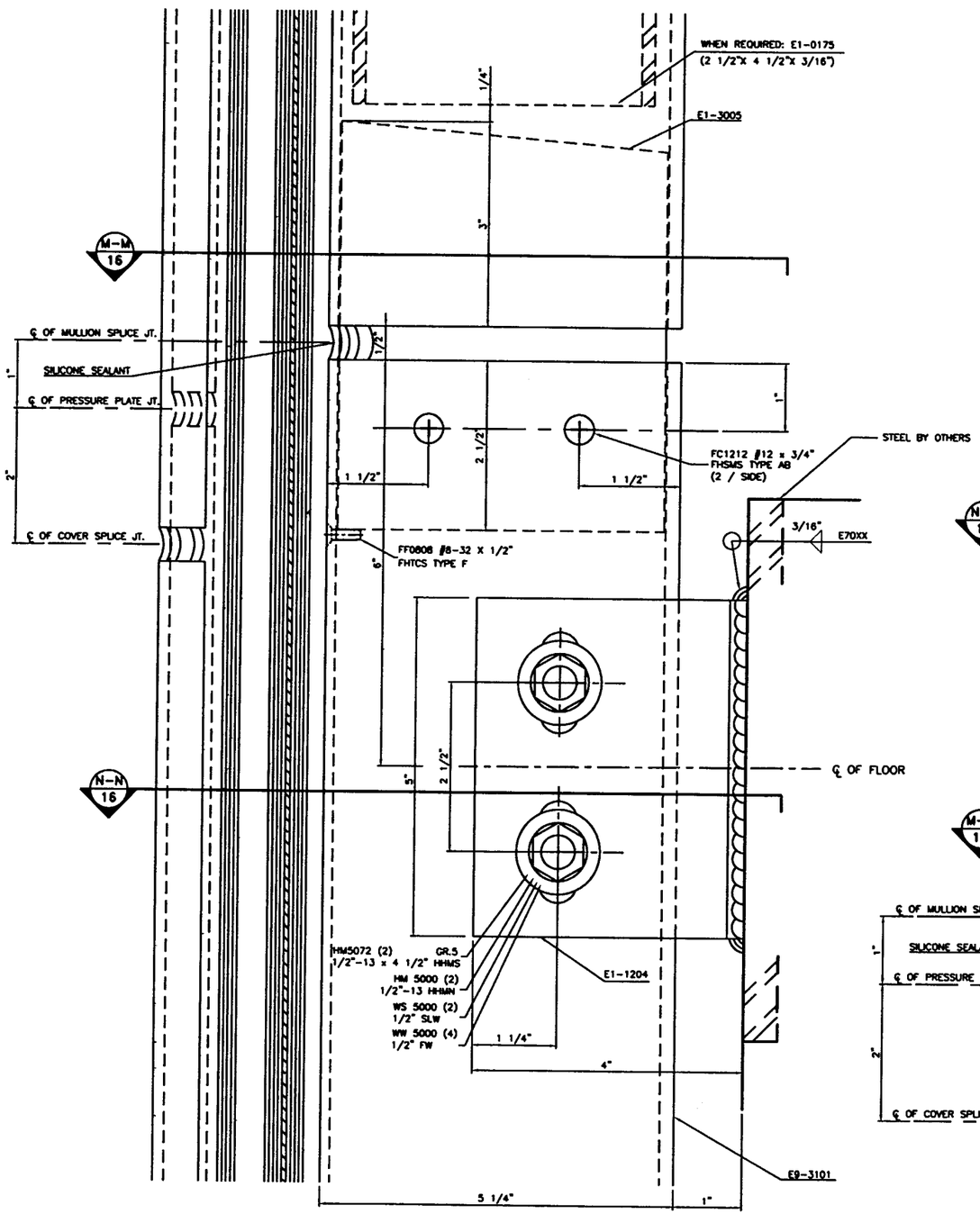

SPLICE & WINDLOAD ANCHOR CLIP

DETAIL 52
MULL.

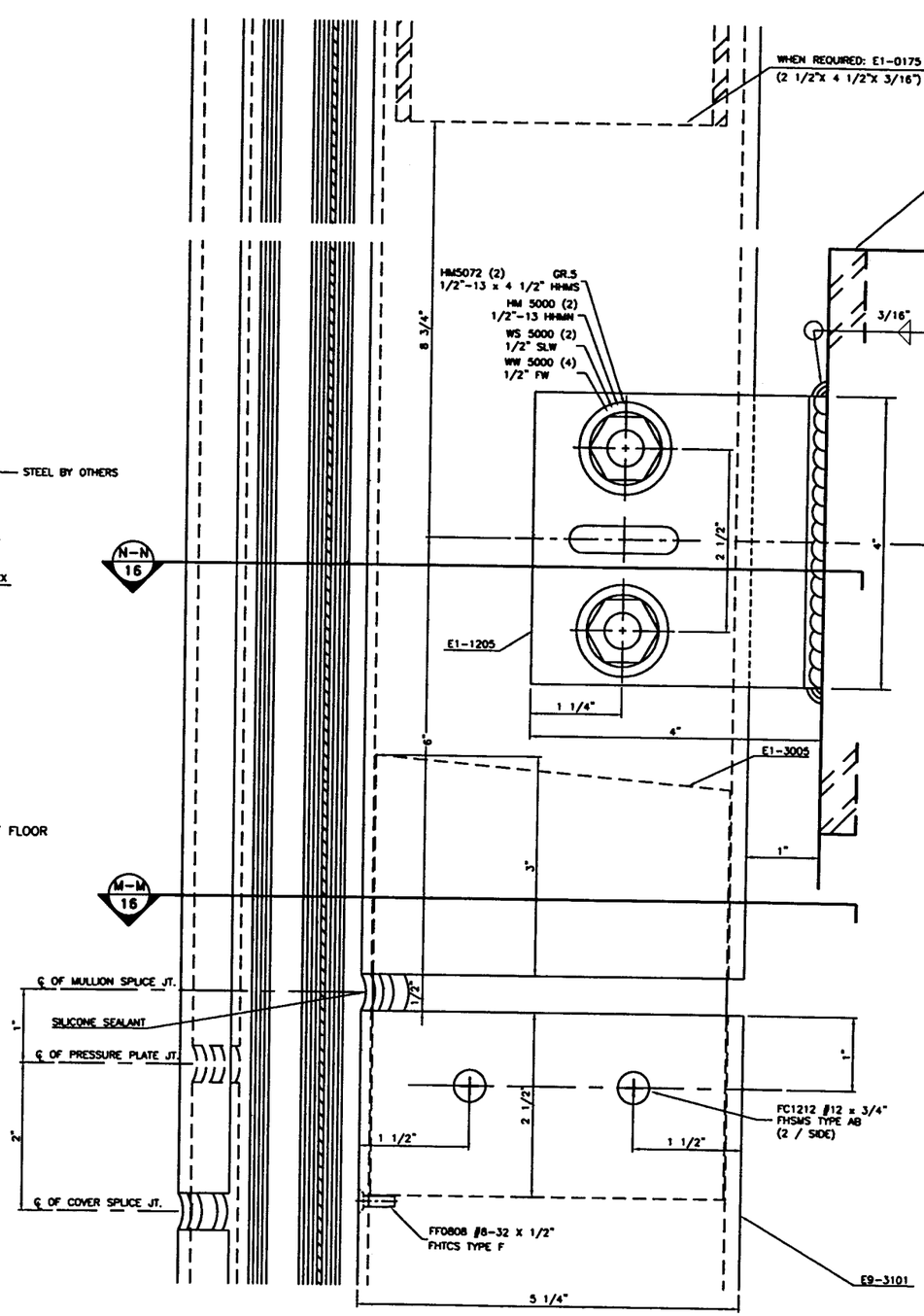

SPLICE & DEADLOAD ANCHOR CLIP

DETAIL 52A
MJLL.

REV.	DESCRIPTION	BY	DATE

TILLECO INC.
TILLIT TESTING & ENGINEERING COMPANY
6595 NW 36th STREET, STE. 217
MIAMI, FLORIDA 33166

WALTER A. TILLIT JR. P.E.
STRUCTURAL ENGINEER
FL REG. 4107

12/11/02

PRODUCT REVISED
as complying with the Florida Building Code
Acceptance No 02-1118.01
Expiration Date 03/04/06
By _____
Miami Dade Product Control Division

RESERVED FOR METRO-DADE USE ONLY

YKK AP America
YKK AP AMERICA, INC.
5630 GWALTNEY DRIVE
ATLANTA, GEORGIA 30336

SYSTEM	SCALE
YHC 300 INSULATED GLAZING SYS.	1/2

DESCRIPTION: SPLICE AND ANCHOR CLIP DETAILS

DRAWING NUMBER	REV.
YHC-300-OG-LI	

APPROVED BY	DRAWN BY	DATE	SHEET NO.
JIA	RTB	8/5/02	15 OF 30

G:\SYSDWGS\YHC300OG\DADE\INSULATED\LARGEMISSILE\YHC300o15LI.DWG

REV.	DESCRIPTION	BY	DATE

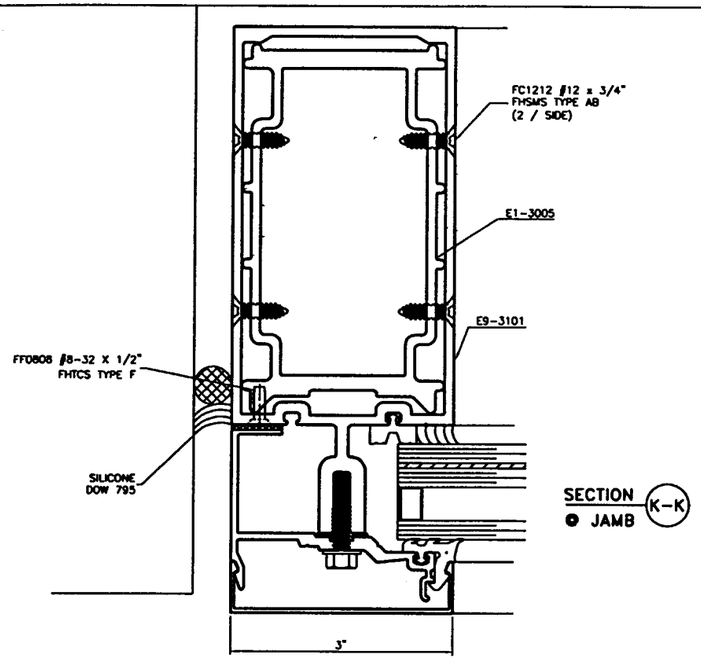

SECTION (K-K)
JAMB

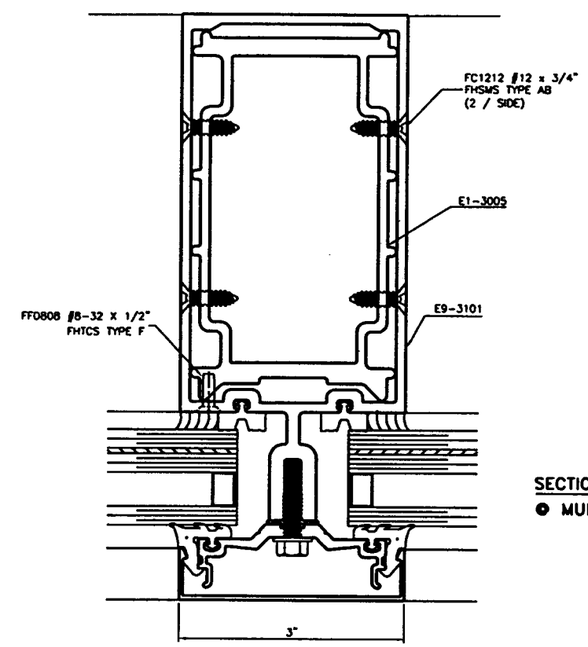

SECTION (M-M)
MULL.

TILTECO INC.
TILLIT TESTING & ENGINEERING COMPANY
6595 NW 36th STREET, STE. 217
MIAMI, FLORIDA 33166

WARNER A. TILLIT JR., P.E.
STRUCTURAL ENGINEER
LICENSE NO. 41197

7/11/02

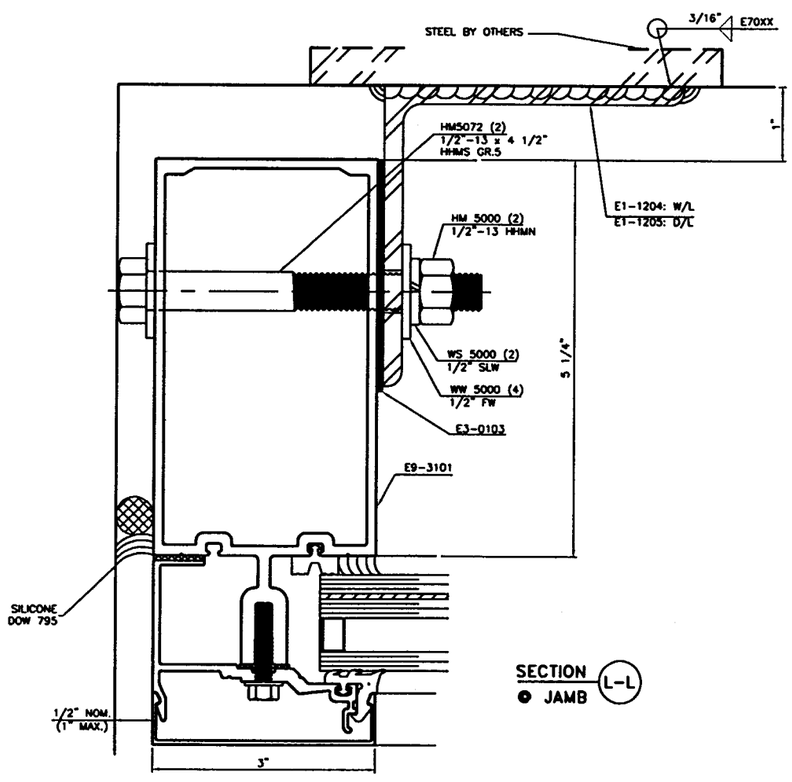

SECTION (L-L)
JAMB

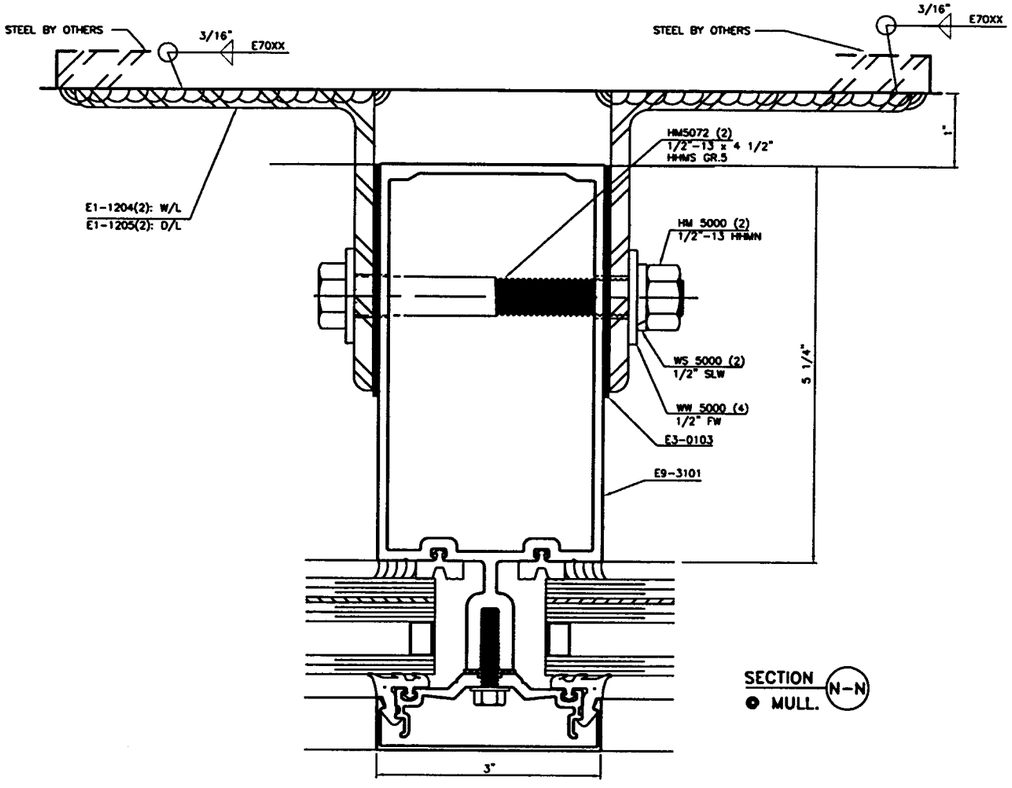

SECTION (N-N)
MULL.

PRODUCT REVISED
as complying with the Florida Building Code
Acceptance No 02-1118.01
Expiration Date 03/04/06
By _____
Miami-Dade Product Control Division

RESERVED FOR METRO-DADE USE ONLY

YKK AP America
YKK AP AMERICA, INC.
5630 GWALTNEY DRIVE
ATLANTA, GEORGIA 30336

SYSTEM	SCALE
YHC 300 INSULATED GLAZING SYS.	1/2

DESCRIPTION: SPLICE AND ANCHOR CLIP DETAILS

DRAWING NUMBER	REV.
YHC-300-OG-LI	

APPROVED BY	DRAWN BY	DATE	SHEET NO.
JIA	RTB	8/5/02	16 OF 30

G:\SYSDWGS\YHC3000G\DADE\INSULATED\LARGEMISSILE\YHC300p16LI.DWG

REV.	DESCRIPTION	BY	DATE

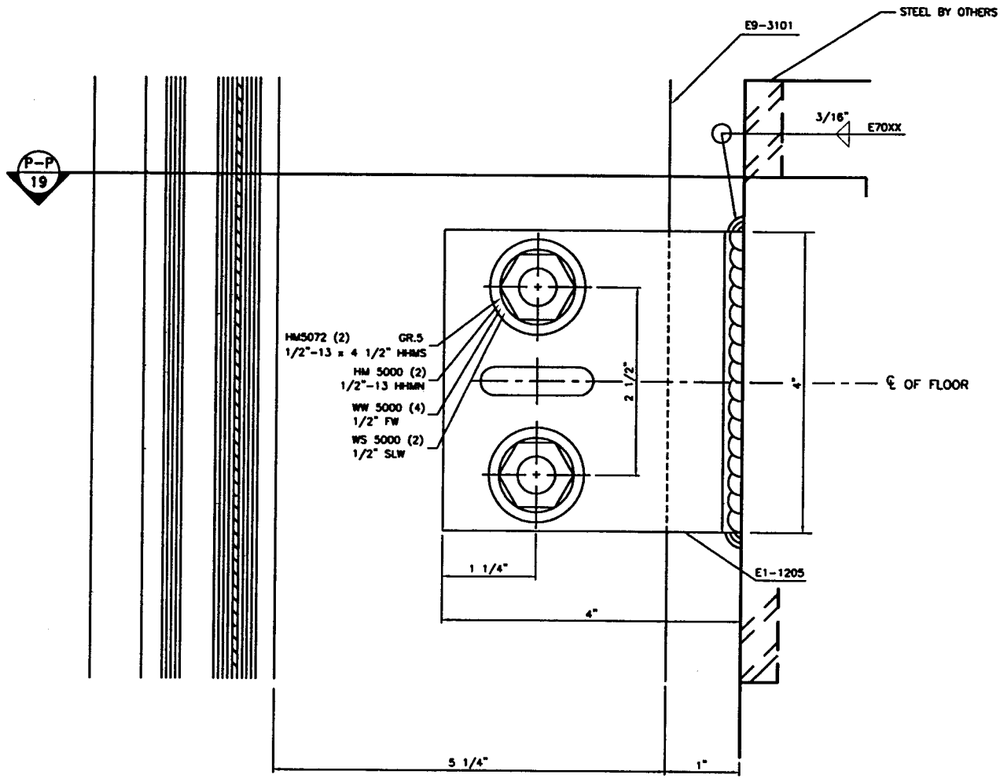

DEADLOAD ANCHOR CLIP

DETAIL 53

● JAMB

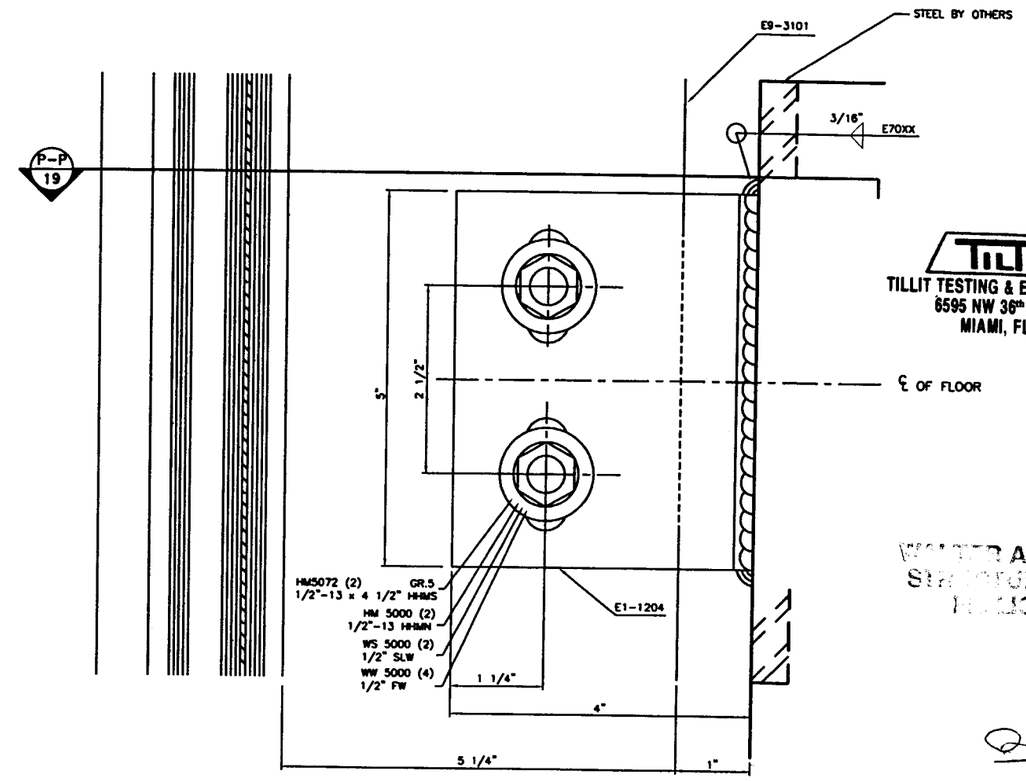

WINDLOAD ANCHOR CLIP

DETAIL 53A

● JAMB

TILLECO INC.
TILLIT TESTING & ENGINEERING COMPANY
8595 NW 36th STREET, STE. 217
MIAMI, FLORIDA 33166

WALTER A. TILLIT JR., P.E.
STRUCTURAL ENGINEER
FL LIC. NO. 43137

12/11/02

PRODUCT REVISED
as complying with the Florida Building Code
Acceptance No 02-1118.01
Expiration Date 03/04/06
By
Miami Dade Product Control Division

RESERVED FOR METRO-DADE USE ONLY

YKK AP America

YKK AP AMERICA, INC.
5630 GWALTNEY DRIVE
ATLANTA, GEORGIA 30336

SYSTEM	SCALE
YHC 300 INSULATED GLAZING SYS.	1/2

DESCRIPTION: MID-ANCHOR CLIP DETAILS

DRAWING NUMBER: YHC-300-OG-LI

REV.:

APPROVED BY	DRAWN BY	DATE	SHEET NO.
JIA	RTB	8/5/02	17 OF 30

G:\SYSDWGS\YHC300OG\DADE\INSULATED\LARGEMISSILE\YHC300p17LI.DWG

REV.	DESCRIPTION	BY	DATE

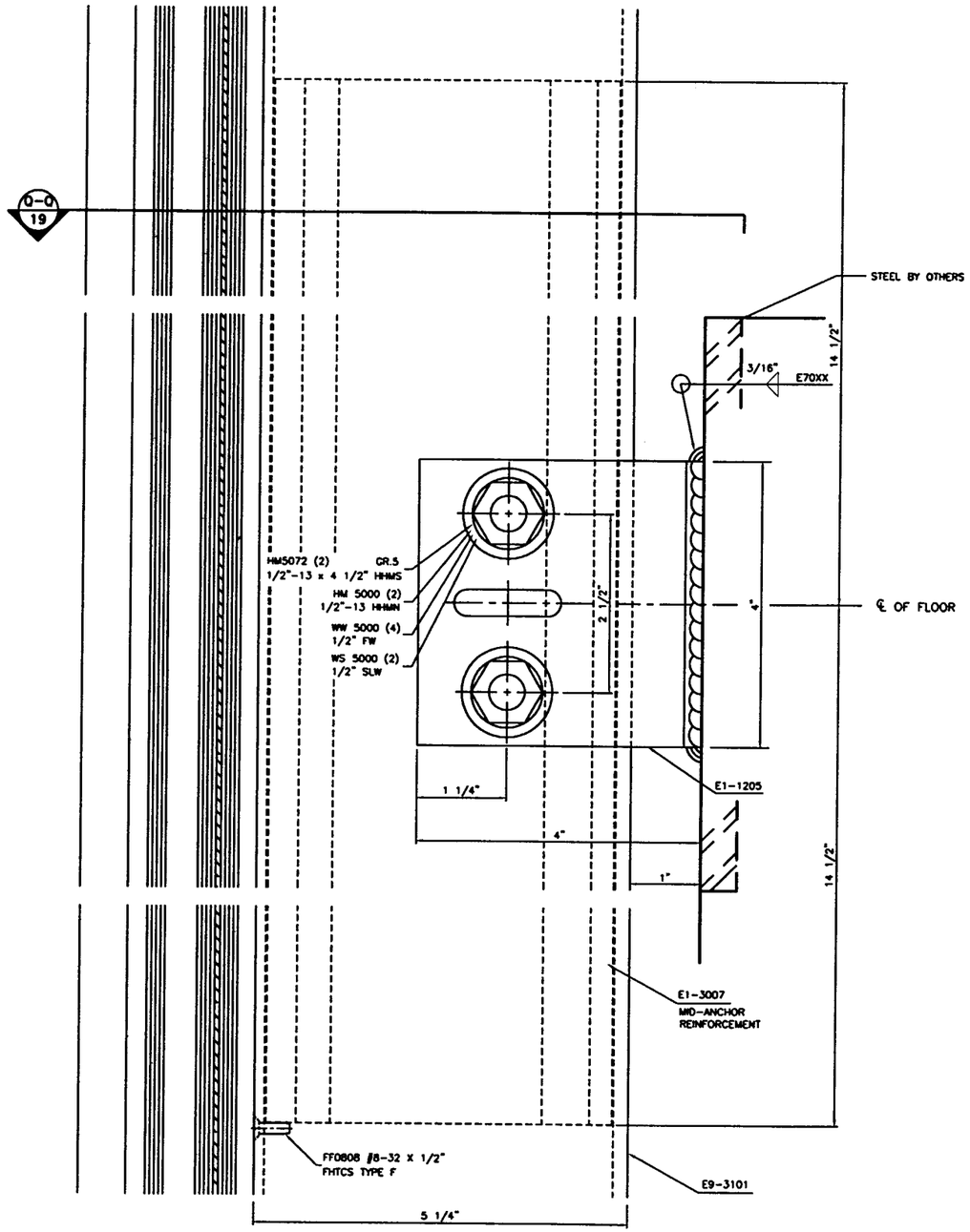

DEADLOAD ANCHOR CLIP

DETAIL 54

● MULL.

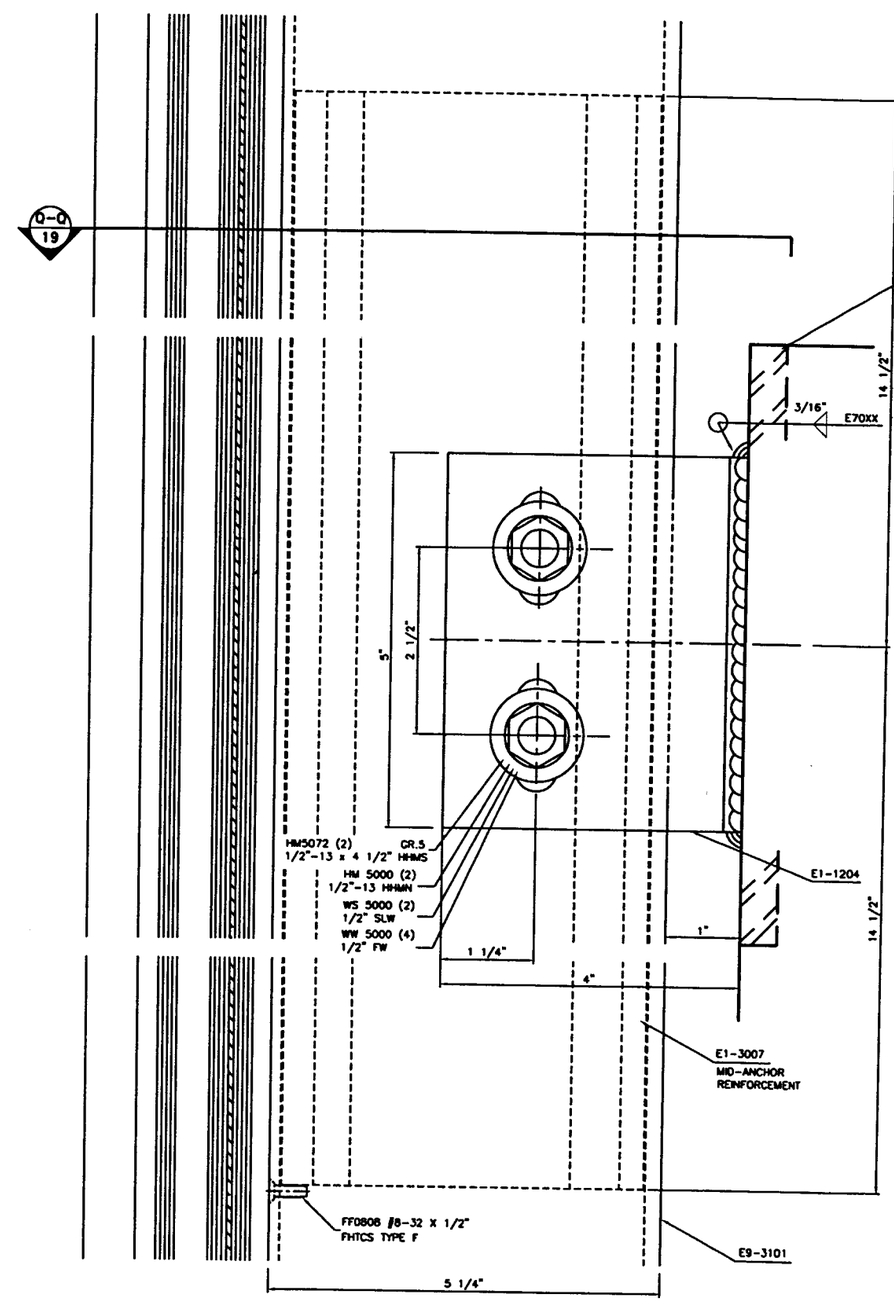

WINDLOAD ANCHOR CLIP

DETAIL 54A

● MULL.

TILTECO INC.

TILLIT TESTING & ENGINEERING COMPANY
6595 NW 36th STREET, STE. 217
MIAMI, FLORIDA 33166

A. TILLIT JR., P.E.
ERAL ENGINEER
12/1/02

PRODUCT REVISED
as complying with the Florida Building Code
Acceptance No 02-1118.01
Expiration Date 03/04/06
By
Miami Dade Product Control Division

RESERVED FOR METRO-DADE USE ONLY

YKK AP America

YKK AP AMERICA, INC.
5630 GWALTNEY DRIVE
ATLANTA, GEORGIA 30336

SYSTEM	SCALE
YHC 300 INSULATED GLAZING SYS.	1/2

DESCRIPTION: MID-ANCHOR CLIP DETAILS

DRAWING NUMBER	REV.
YHC-300-OG-LI	

APPROVED BY	DRAWN BY	DATE	SHEET NO.
JIA	RTB	8/5/02	18 OF 30

G:\SYSDWGS\YHC300OG\DADE\INSULATED\LARGEMISSILE\YHC300D18LI.DWG

REV.	DESCRIPTION	BY	DATE

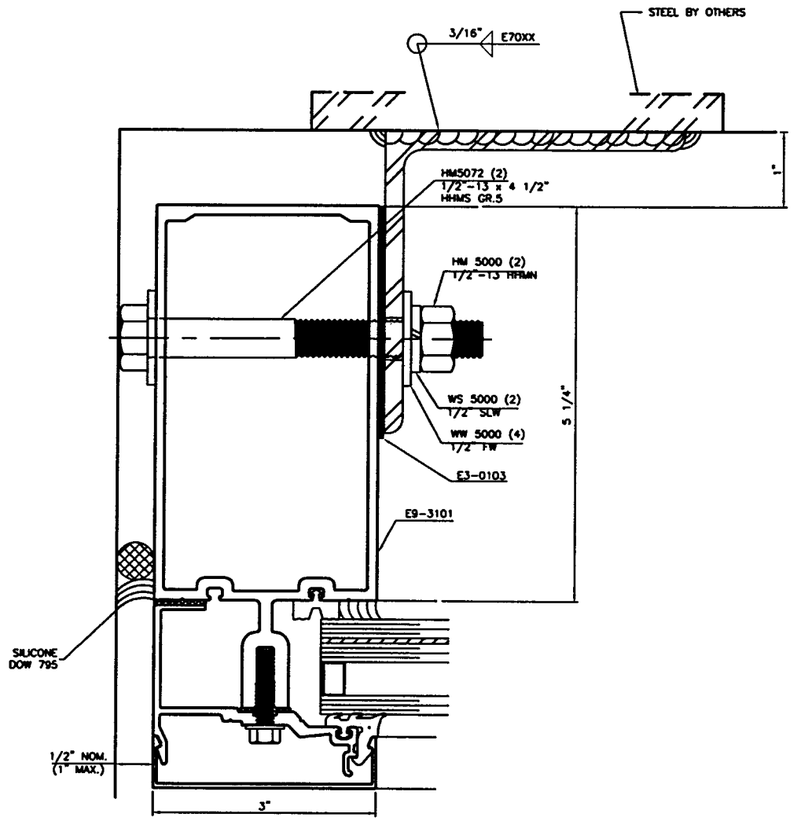

SECTION P-P

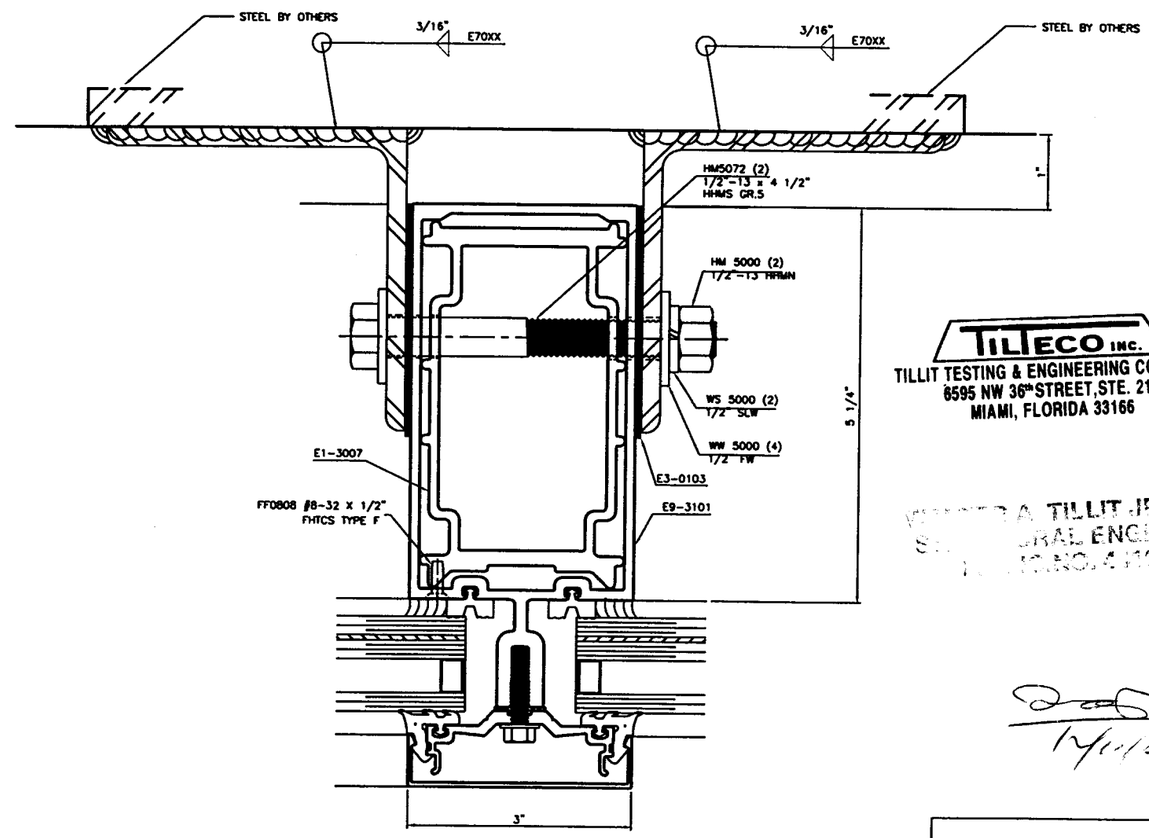

SECTION Q-Q

TILTECO INC.
TILLIT TESTING & ENGINEERING COMPANY
6595 NW 36th STREET, STE. 217
MIAMI, FLORIDA 33166

[illegible] A. TILLIT JR., P.E.
[illegible] RAL ENGINEER
[illegible] NO. 41107

12/10/02

PRODUCT REVISED
as complying with the Florida Building Code
Acceptance No 02-1118.01
Expiration Date 03/04/06
By [illegible]
Miami Dade Product Control Division

RESERVED FOR METRO-DADE USE ONLY

YKK AP America

YKK AP AMERICA, INC.
5630 GWALTNEY DRIVE
ATLANTA, GEORGIA 30336

SYSTEM	SCALE
YHC 300 INSULATED GLAZING SYS.	1/2

DESCRIPTION: SPLICE AND ANCHOR CLIP DETAILS

DRAWING NUMBER	REV.
YHC-300-OG-LI	

APPROVED BY	DRAWN BY	DATE	SHEET NO.
JIA	RTB	8/5/02	19 OF 30

G:\SYSDWGS\YHC300OG\DADE\INSULATED\LARGEMISSILE\YHC300p19LI.DWG

REV.	DESCRIPTION	BY	DATE

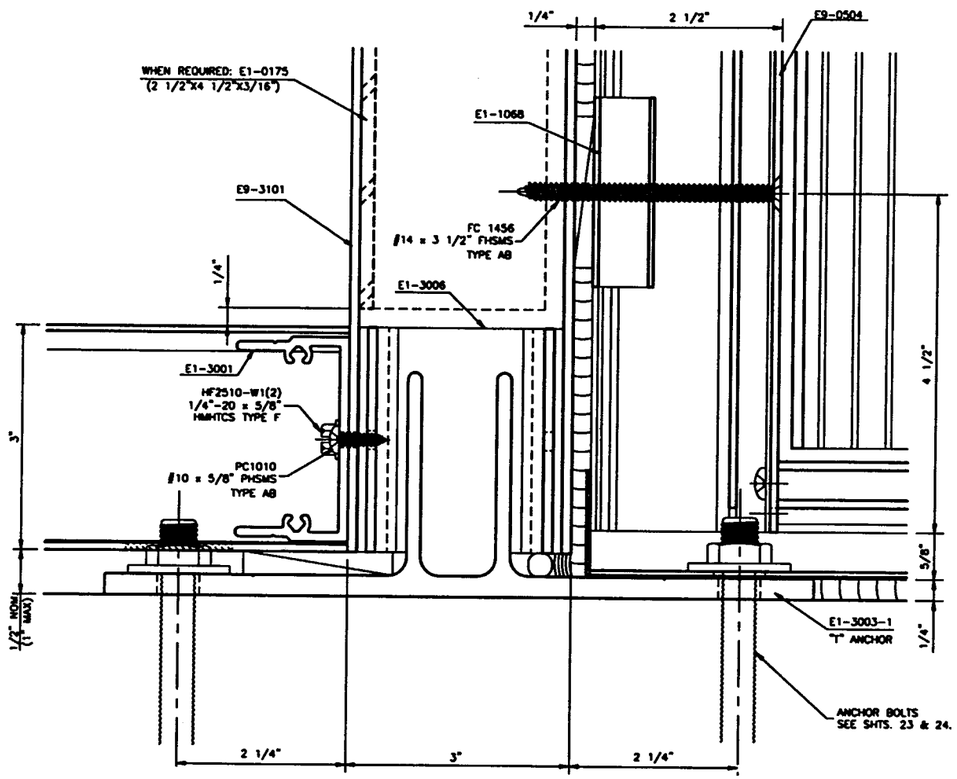

SECTION R-R
DOOR

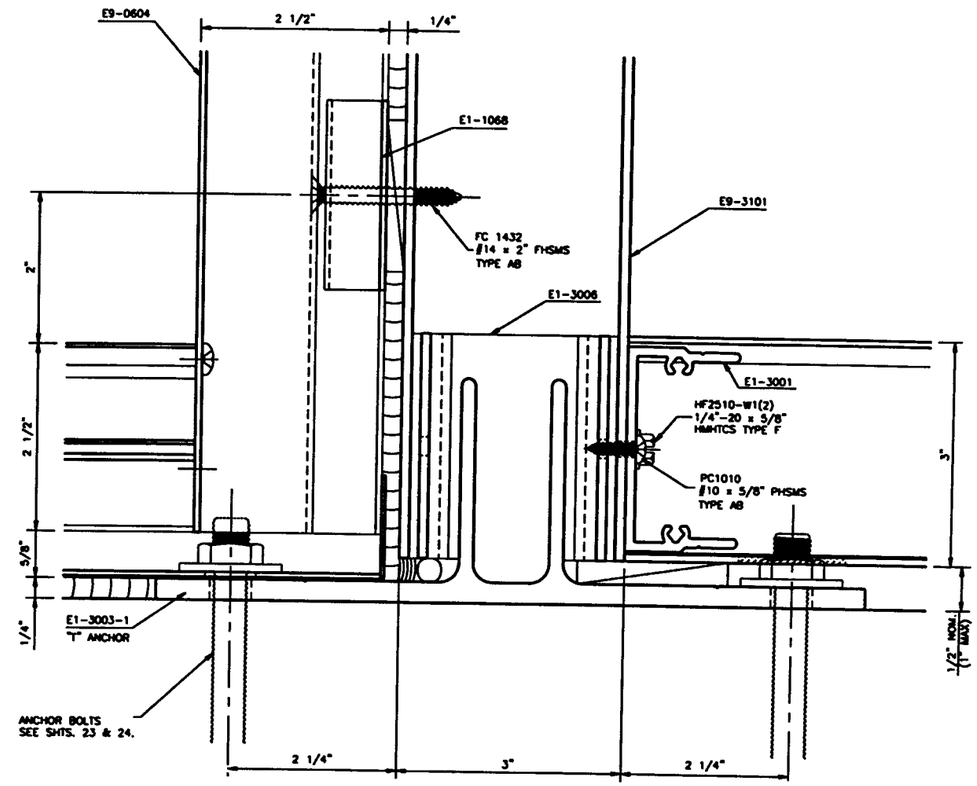

SECTION S-S
STOREFRONT

PRODUCT REVISED
as complying with the Florida Building Code
Acceptance No 02-1118.01
Expiration Date 03/04/06
By [signature]
Miami Dade Product Control Division

RESERVED FOR METRO-DADE USE ONLY

WALTER A. TILLIT JR., P.E.
STRUCTURAL ENGINEER
LIC. NO. 45137

TILTECO INC.
TILLIT TESTING & ENGINEERING COMPANY
6595 NW 36th STREET, STE. 217
MIAMI, FLORIDA 33166

12/11/02

SEE DETAIL OF DOOR AND STOREFRONT IN THE CORRESPONDING NOTICE OF ACCEPTANCE

YKK AP America
YKK AP AMERICA, INC.
5630 GWALTNEY DRIVE
ATLANTA, GEORGIA 30336

SYSTEM	SCALE
YHC 300 INSULATED GLAZING SYS.	1/2

DESCRIPTION: STOREFRONT/DOOR SILL ANCHOR DETAILS

DRAWING NUMBER	REV.
YHC-300-OG-LI	

APPROVED BY	DRAWN BY	DATE	SHEET NO.
JIA	RTB	8/5/02	20 OF 30

G:\SYSDWGS\YHC3000G\DADE\INSULATED\LARGEMISSILE\YHC300p20LI.DWG

MATERIAL LIST

	DESCRIPTION	SHAPE #	MATERIAL	BASIC DIMENSIONS	REMARK	REV
	VERT. MULL.	E9-3101	6063-T5	3" x 6 11/16"		
	HORIZONTAL	E9-3102	6063-T5	3" x 6 11/16"		
	OPEN SIDE HORIZ.	E9-3104	6063-T5	3" x 6 11/16"	FOR SILL & HEAD	
	TYP. PRESS. PLATE	AS-3138	6063-T5	2 1/2" x 5/8"	FOR VERT. & HORIZ. MULLION	
	PERIM. PRESS. PL.	AS-3143	6063-T5	2 3/4" x 2"	FOR JAMB, HEAD & SILL	
	SPANDREL ADAPTER	E9-3141	6063-T5	1 1/8" x 7/8"	ADAPTER FOR 1/4" GLAZING	
	SNAP COVER	E9-3161	6063-T5	3" x 11/16"	FOR VERT. & HORIZ. MULLION	
	2 PIECE FLUSH FILLER	E9-3162	6063-T5	4 7/8" x 5/16"	FOR OPEN SIDE HORIZ.	
	ANGLE	E9-9303	6063-T5	1 1/2" x 1 1/2"	FOR 90° CORNER	

PART LIST

	SHEAR CLIP	E1-3001	6063-T5	4 1/2" LG.	HORIZ. TO VERT. CONNECTION	
	ANCHOR / SHEAR CLIP	E1-3002	6063-T5	4 1/2" LG.	SILL TO VERT. CONNECTION	
	"T" ANCHOR	E1-3003	6061-T6	4" LG.	TOP ANCHOR	
	"F" ANCHOR	E1-3004	6063-T5	4" LG.	TOP JAMB ANCHOR	
	SPLICE SLEEVE	E1-3005	6063-T5	6" LG.	FOR MULTI-SPAN APPLICATION	
	ANCHOR SLEEVE	E1-3006	6063-T5	3" LG.	USE WITH 'T' & 'F' ANCHORS	
	REINF. SLEEVE	E1-3007	6063-T5	29" LG.	AT MID-SPAN ANCHOR IN TWIN SPAN	
	SPLICE SLEEVE	E1-3009	FORMED ALUM.	2" LG.	FOR COVER	
	END PLATE	E1-3010	ALUM. SHT.		FOR VERTICAL MULLION 1" GL.	
	STEEL REINFORCEMENT	E1-0175	STEEL A36	2 1/2" x 4 1/2" x 3/16"	FOR INTERMEDIATE VERT.	

DEPTH

BILL OF MATERIALS

FOR INSULATED GLAZING

SYSTEM	YHC 300
DESCRIPTION	HURRICANE CURTAINWALL
FINISH	PAINTED OR ANODIZED
HARDWARE	N/A
GLAZING	SEE ELEVATION SHEET

PART LIST

	DESCRIPTION	PART #	MATERIAL	BASIC DIMENSIONS	COLOR	REMARK	REV
	EXT. GASKET 3/16" F.C.	E2-0351	EPDM		BLACK	EXTERIOR FOR 1 5/16" GL.	
	EXT. GASKET 516" F.C.	E2-0352	EPDM		BLACK	EXTERIOR FOR 1 3/16" GL.	
	EXT. GASKET 7/16" F.C.	E2-0360	EPDM		BLACK	EXTERIOR FOR 1 1/16" GL.	
	SPACER GASKET	E2-0353	EPDM S.C.		BLACK	INTERIOR	
	BULB GASKET	E2-0354	PVC or EPDM		BLACK	FOR SPANDREL ADAPTER	
	END DAM BLOCK	E2-0355	E.V.A. SPONGE		GREY	AT EVERY HORIZ. END	
	ISOLATOR TAPE	E2-0356	PVC SPONGE	11/16" x 1/8"	BLACK	FOR PERIMETER PRESS. PLATE	
	SETTING BLOCK	E2-0375	EPDM	1 5/16" x 7/16" x 4" LG.	BLACK	FOR INSULATED GL. (2/LITE)	
	SETTING BLOCK	E2-0357	EPDM	7/16" x 7/16" x 4" LG.	BLACK	FOR SINGLE GLASS SPANDREL (2/LITE)	
	SLIP PAD	E3-0103	NYLON	3 3/4" x 5" x 1/16"	WHITE	FOR STEEL ANCHORS	
	FH SMS (F)	FF-0808	ST. ZINC PLATED	#8 x 1/2"		TO LOCATE E1-3007	
	FH SMS (AB)	FC-1016	ST. ZINC PLATED	#10 x 1"		FOR E9-3141 ADAPTOR	
	FH SMS (AB)	FC-1212	ST. ZINC PLATED	#12 x 3/4"		FOR SPLICE SLEEVE	
	FH SMS (AB)	FC-1220	ST. ZINC PLATED	#12 x 1 1/4"		FOR HORIZONTAL/SHEAR CLIP	
	FH SMS (AB)	FC-1410	ST. ZINC PLATED	#14 x 5/8"		FOR MULLION END CAP	
	PH SMS (AB)	PC-1010	ST. ZINC PLATED	#10 x 5/8"		FOR ANCHOR SLEEVE	
	HWH TCS (F)	HF2510-W1	ST. ZINC PLATED	1/4" - 20 x 5/8"		FOR SHEAR CLIP	
	HWH TCS (F)	HF2516-W1	ST. ZINC PLATED	1/4" - 20 x 1"		FOR SHEAR CLIP & STEEL REINF.	
	HH MS	HM-2516-W3	ST. ZINC PLATED	1/4" - 20 x 1"		FOR PRESSURE PLATE	
	BOLT	HM-3864	ST. ZINC PLATED	3/8"-16 x 4"		FOR "J" ANCHOR MULLION	
	BOLT	HM-3816	STEEL GR.5	3/8"-16 x 1"		FOR "J" ANCHOR JAMB	
	NUT 3/8"	HM-3800	STEEL GR.5	3/8"-16		FOR "J" ANCHOR MULL. & JAMB	
	WASHER 3/8"	WW-3800	ST. ZINC PLATED	3/8"		FOR "J" ANCHOR MULL. & JAMB	
	LOCK-WASHER 3/8"	WS-3800	ST. ZINC PLATED	3/8"		FOR "J" ANCHOR MULL. & JAMB	
	NUT - 1/2"	HM-5000	ST. ZINC PLATED	1/2" - 13		FOR INTERMEDIATE ANCHORS	
	WASHER - 1/2"	WN-5000	ST. ZINC PLATED	1/2"		FOR INTERMEDIATE ANCHORS	
	LOCKWASHER - 1/2"	WS-5000	ST. ZINC PLATED	1/2"		FOR INTERMEDIATE ANCHORS	
	BOLT	HM-5072	STEEL GR.5	1/2" - 13 x 4 1/2"		FOR INTERMEDIATE ANCHORS	
	STEEL ANGLE	E1-1204	STEEL A36	4" x 4" x 1/4" x 5" LG.		WINDLOAD ANCHORS	
	STEEL ANGLE	E1-1205	STEEL A36	4" x 4" x 1/4" x 4" LG.		DEADLOAD ANCHORS	
	RAWL-STUD ANCHOR			1/2" x 5 1/2"		CONC. ANCHOR (SEE SHTS.30-38)	
	RAWL-BOLT ANCHOR			3/8" x 4"		CONC. ANCHOR (SEE SHTS.30-38)	
	DOW 795		SILICONE			FOR PERIMETER CAULKING	
	DOW 995		SILICONE			FOR STRUCTURAL CAULKING	

NOTE :

PRODUCT REVISED
as complying with the Florida
Building Code
Acceptance No. 02-1118.01
Expiration Date 03/04/06
By
Miami Dade Product Control
Division

LP LOOSE PART
S SELECTION PART
OP OPTION PART

Y: COLOR INDICATED

REV	DESCRIPTION	BY	DATE

NO. YHC-300-OG-LI

CKD BY	BY	DATE	SHEET NO.
JIA	RTB	8/5/02	21 of 30

G:\SYSDWGS\YHC300OG\DADE\INSULATED\LARGEMISSILE\YHC300p21LI.XLS

REV.	DESCRIPTION	BY	DATE

YHC 300 OG SINGLE SPAN

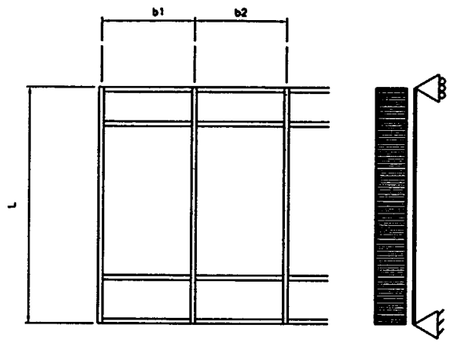

$b = \frac{b1 + b2}{2}$

YHC 300 OG TWIN SPAN

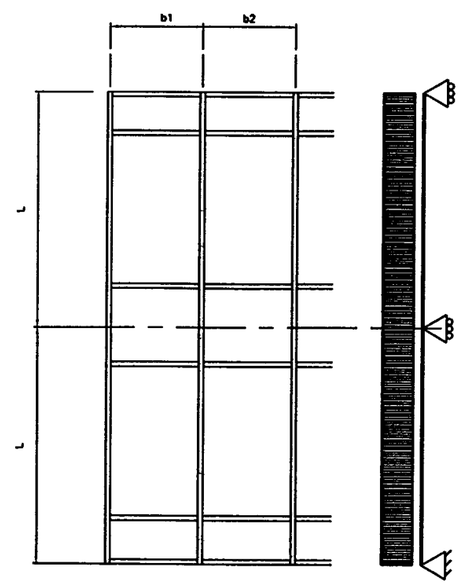

$b = \frac{b1 + b2}{2}$

MAXIMUM MULLION SPAN "L" (Ft) SCHEDULE FOR A GIVEN MULLION SPACING "b" (Ft) AND A GIVEN DESIGN WIND LOAD "W" (psf)

CASE 1 : SINGLE SPAN WITH UNREINFORCED MULLION. (SEE DET.4/SHT.4)

CASE 2 : SINGLE SPAN WITH REINFORCED MULLION FULL HEIGHT. (SEE DET.5/SHT.4) (LENGTH OF E1-0175=L-6 1/2")

CASE 3 : TWIN SPANS WITH REINFORCED MULLION AT INTERMEDIATE SUPPORT ONLY. (SEE DET'S 54 & 54A/SHT.18 + SECT. QQ/SHT.19) (LENGTH OF E1-3007=29").

MAXIMUM DESIGN LOAD "W"	"b"	CASE 1 "L"	CASE 2 "L"	CASE 3 "L"
±60.0	3'-0"	11'-6"	14'-0"	14'-0"
	3'-6"	11'-6"	14'-0"	14'-0"
	4'-0"	11'-6"	14'-0"	14'-0"
	4'-6"	10'-11"	14'-0"	14'-0"
	5'-0"	10'-5"	14'-0"	14'-0"
	5'-6"	9'-11"	13'-7"	13'-7"
	6'-0"	9'-6"	13'-3"	13'-3"
±65.0	3'-0"	11'-6"	14'-0"	14'-0"
	3'-6"	11'-6"	14'-0"	14'-0"
	4'-0"	11'-2"	14'-0"	14'-0"
	4'-6"	10'-6"	14'-0"	14'-0"
	5'-0"	10'-0"	13'-8"	13'-8"
	5'-6"	9'-6"	13'-3"	13'-3"
	6'-0"	9'-1"	12'-10"	12'-10"
±70.0	3'-0"	11'-6"	14'-0"	14'-0"
	3'-6"	11'-6"	14'-0"	14'-0"
	4'-0"	10'-9"	14'-0"	14'-0"
	4'-6"	10'-2"	13'-10"	13'-10"
	5'-0"	9'-7"	13'-4"	13'-4"
	5'-6"	9'-2"	12'-11"	12'-11"
	6'-0"	8'-9"	12'-7"	12'-7"
±75.0	3'-0"	11'-6"	14'-0"	14'-0"
	3'-6"	11'-1"	14'-0"	14'-0"
	4'-0"	10'-4"	14'-0"	14'-0"
	4'-6"	9'-9"	13'-6"	13'-6"
	5'-0"	9'-3"	13'-0"	13'-0"
	5'-6"	8'-10"	12'-7"	12'-7"
	6'-0"	8'-6"	12'-3"	12'-3"

MAXIMUM DESIGN LOAD "W"	"b"	CASE 1 "L"	CASE 2 "L"	CASE 3 "L"
±80.0	3'-0"	11'-6"	14'-0"	14'-0"
	3'-6"	10'-9"	14'-0"	14'-0"
	4'-0"	10'-0"	13'-9"	13'-9"
	4'-6"	9'-6"	13'-3"	13'-3"
	5'-0"	9'-0"	12'-9"	12'-9"
	5'-6"	8'-7"	12'-4"	12'-4"
	6'-0"	7'-11"	11'-8"	11'-8"
±85.0	3'-0"	11'-3"	14'-0"	14'-0"
	3'-6"	10'-5"	14'-0"	14'-0"
	4'-0"	9'-9"	13'-5"	13'-5"
	4'-6"	9'-2"	13'-0"	13'-0"
	5'-0"	8'-9"	12'-6"	12'-6"
	5'-6"	8'-2"	12'-0"	12'-0"
	6'-0"	7'-6"	11'-0"	11'-0"
±90.0	3'-0"	10'-11"	14'-0"	14'-0"
	3'-6"	10'-1"	13'-10"	13'-10"
	4'-0"	9'-6"	13'-3"	13'-3"
	4'-6"	8'-11"	12'-9"	12'-9"
	5'-0"	8'-6"	12'-6"	12'-6"
	5'-6"	7'-8"	11'-4"	11'-4"
	6'-0"	7'-0"	10'-4"	10'-4"

WALTER A. TILLIT JR. P.E.
STRUCTURAL ENGINEER
FL. LIC. NO. 4707

TILTECO INC.
TILLIT TESTING & ENGINEERING COMPANY
6595 NW 36th STREET, STE. 217
MIAMI, FLORIDA 33166

12/11/02

PRODUCT REVISED
as complying with the Florida Building Code
Acceptance No. 02-1118.01
Expiration Date 03/04/06
By
Miami Dade Product Control Division

RESERVED FOR METRO-DADE USE ONLY

YKK AP AMERICA, INC.
5630 GWALTNEY DRIVE
ATLANTA, GEORGIA 30336

SYSTEM	SCALE
YHC 300 INSULATED GLAZING SYS.	NONE

DESCRIPTION: MULLION CHART

DRAWING NUMBER	REV.
YHC-300-OG-LI	

APPROVED BY	DRAWN BY	DATE	SHEET NO.
JIA	JIA	8/5/02	22 of 30

G:\SYSDWGS\YHC300OG\DADE\INSULATED\LARGEMISSILE\YHC300p22LI.DWG

YHC 300 O/G SINGLE SPAN

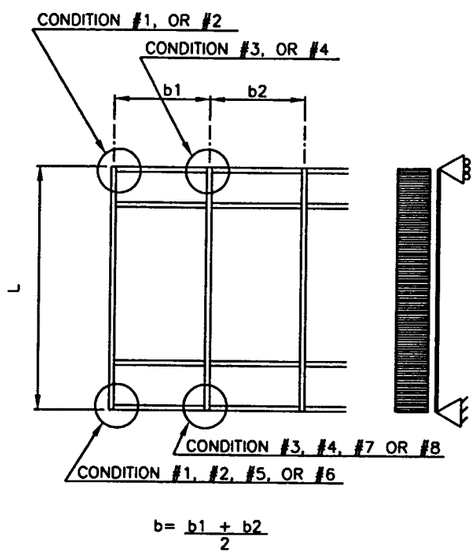

$b = \frac{b1 + b2}{2}$

** OPTIONAL ANCHORS CAN BE USED TO LIMITATIONS ON THIS TABLE

DESIGN LOAD CAPACITY OF OPTIONAL ANCHORS – PSF POSITIVE OR NEGATIVE

MULLION SPAN "L"	MULL. DIM."b"	CONDITION #1 OPT. ANCHOR BOLT B	CONDITION #3 OPT. ANCHOR BOLT D	CONDITION #5 OPT. ANCHOR BOLT A	CONDITION #7 OPT. ANCHOR BOLT D
8'-6"	6-0"	90.0	90.0	90.0	90.0
9'-0"	5'-9"	90.0	90.0	90.0	90.0
	6'-0"	88.9	90.0	88.9	88.9
9'-6"	5'-6"	90.0	90.0	90.0	90.0
	5'-9"	87.9	90.0	87.9	87.9
	6'-0"	84.2	90.0	84.2	84.2
10'-0"	5'-3"	90.0	90.0	90.0	90.0
	5'-6"	87.3	90.0	87.3	87.3
	5'-9"	83.5	90.0	83.5	83.5
	6'-0"	80.0	86.7	80.0	80.0
10'-6"	5'-0"	90.0	90.0	90.0	90.0
	5'-3"	87.1	90.0	87.1	87.1
	5'-6"	83.1	90.0	83.1	83.1
	5'-9"	79.5	86.1	79.5	79.5
	6'-0"	76.2	82.5	76.2	76.2
11'-0"	4'-9"	90.0	90.0	90.0	90.0
	5'-0"	87.3	90.0	87.3	87.3
	5'-3"	83.1	90.0	83.1	83.1
	5'-6"	79.3	86.0	79.3	79.3
	5'-9"	75.9	82.2	75.9	75.9
	6'-0"	72.7	78.8	72.7	72.7
11'-6"	4'-6"	90.0	90.0	90.0	90.0
	4'-9"	87.9	90.0	87.9	87.9
	5'-0"	83.5	90.0	83.5	83.5
	5-3"	79.5	86.1	79.5	79.5
	5'-6"	75.9	82.2	75.9	75.9
	5'-9"	72.6	78.6	72.6	72.6
	6'-0"	69.6	75.4	69.6	69.6

MULLION SPAN "L"	MULL. DIM."b"	CONDITION #1 OPT. ANCHOR BOLT B	CONDITION #3 OPT. ANCHOR BOLT D	CONDITION #5 OPT. ANCHOR BOLT A	CONDITION #7 OPT. ANCHOR BOLT D
12'-0"	4'-3"	90.0	90.0	90.0	90.0
	4'-6"	88.9	90.0	88.9	88.9
	4'-9"	84.2	90.0	84.2	84.2
	5'-0"	80.0	86.7	80.0	80.0
	5'-3"	76.2	82.5	76.2	76.2
	5'-6"	72.7	78.8	72.7	72.7
	5'-9"	69.6	75.4	69.6	69.6
	6'-0"	66.7	72.2	66.7	66.7
12'-6"	4'-3"	90.0	90.0	90.0	90.0
	4'-6"	85.3	90.0	85.3	85.3
	4'-9"	80.8	87.6	80.8	80.8
	5'-0"	76.8	83.2	76.8	76.8
	5'-3"	73.1	79.2	73.1	73.1
	5'-6"	69.8	75.6	69.8	69.8
	5'-9"	66.8	72.3	66.8	66.8
	6'-0"	64.0	69.3	64.0	64.0
13'-0"	4'-0"	90.0	90.0	90.0	90.0
	4'-3"	86.9	90.0	86.9	86.9
	4'-6"	82.1	88.9	82.1	82.1
	4'-9"	77.7	84.2	77.7	77.7
	5'-0"	73.8	80.0	73.8	73.8
	5'-3"	70.3	76.2	70.3	70.3
	5'-6"	67.1	72.7	67.1	67.1
13'-6"	3'-9"	90.0	90.0	90.0	90.0
	4'-0"	88.9	90.0	88.9	88.9
	4'-3"	83.7	90.0	83.7	83.7
	4'-6"	79.0	85.6	79.0	79.0
	4'-9"	74.9	81.1	74.9	74.9
	5'-0"	71.1	77.0	71.1	71.1
14'-0"	3'-9"	90.0	90.0	90.0	90.0
	4'-0"	85.7	90.0	85.7	85.7

NOTES:

ANCHORING INTO CONCRETE ASSUMING THE FOLLOWING:

1. CONCRETE TO BE 3000 PSI MIN.
2. EDGE DISTANCE AS SHOWN MIN.
3. SIZES AND EMBEDMENT AS LISTED

APPROVED ANCHOR BOLT TYPES:
NOTE: STD. ANCHORS LISTED BELOW AND INSTALLED AS SHOWN IN DETAILS HEREIN, MEET THE CAPACITY OF THE SYSTEM AS DETERMINED IN SHEET 22. OPTIONAL ANCHORS MARKED BELOW ARE APPROVED TO USE LIMITED TO CAPACITIES SHOWN IN TABLE.

OPT. A) 3/8 "POWER-BOLTS, WITH 2 1/2" EMBEDMENT INTO CONCRETE.

OPT. B) 3/8"POWER-BOLTS, WITH 3 1/2" EMBEDMENT INTO CONCRETE.

OPT. C) 1/2" POWER-BOLTS, WITH 3" EMBEDMENT INTO CONCRETE.

OPT. D) 1/2" POWER-BOLTS, WITH 4" EMBEDMENT INTO CONCRETE.

STD. E) 3/8" BOLT GR. 5 STEEL, W/ NUT & WASHERS INTO STEEL STRUCTURES.

STD. F) 1/2" BOLT GR. 5 STEEL, W/ NUT & WASHERS INTO STEEL STRUCTURES.

STD. G) 1/2" HILTI "HVA HAS SUPER" ROD W/ 4 1/4" EMBEDMENT INTO CONCRETE.

STD. H) 5/8" POWER-BOLTS, W/ 4" EMBEDMENT INTO CONCRETE

REV.	DESCRIPTION	BY	DATE

CONDITION #8

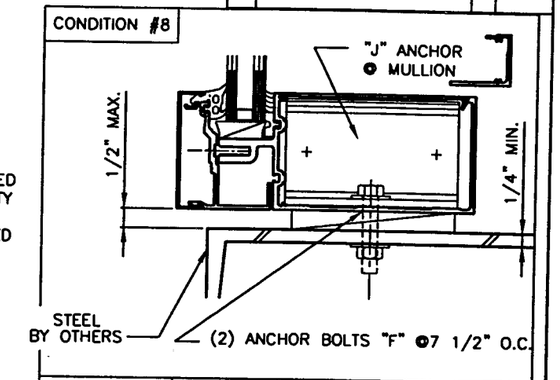

CONDITION #7

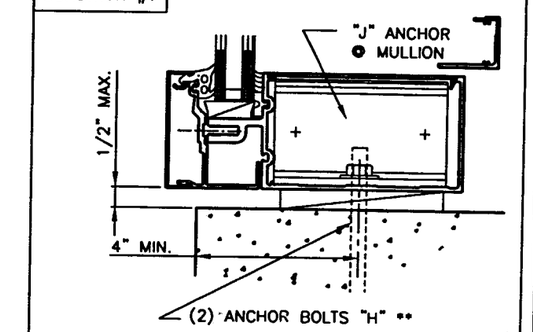

CONDITION #1

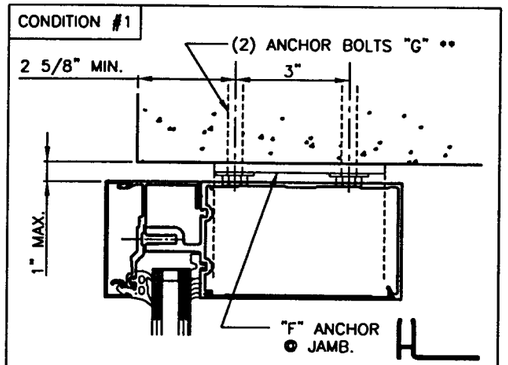

CONDITION #2

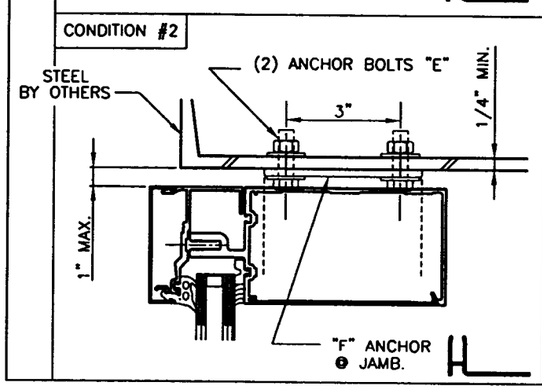

CONDITION #3

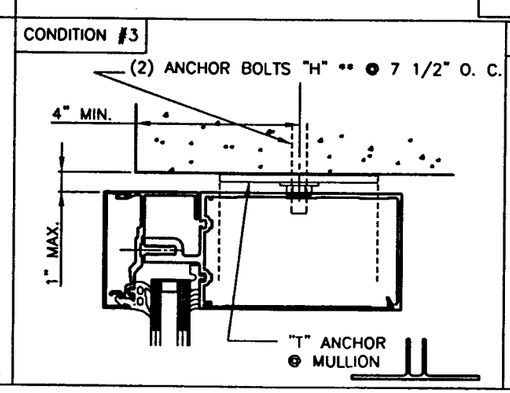

CONDITION #4

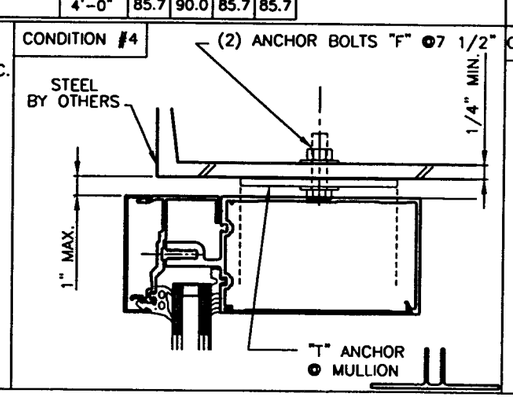

CONDITION #6

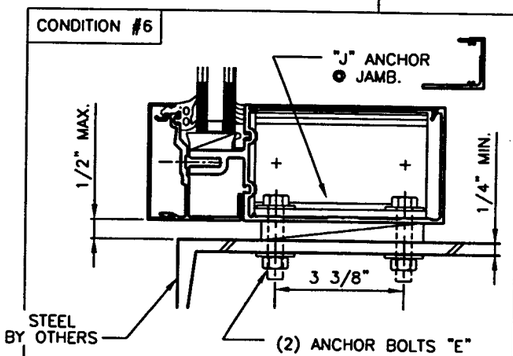

CONDITION #5

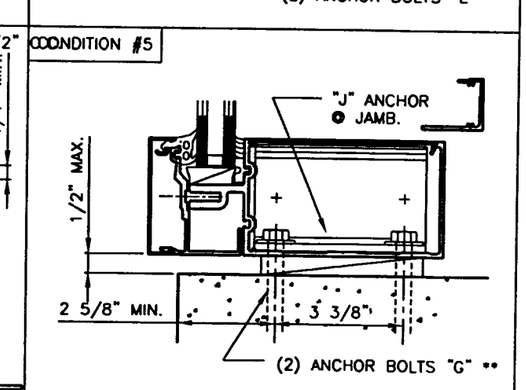

TILLECO INC.
TILLIT TESTING & ENGINEERING COMPANY
8595 NW 30th STREET, STE. 217
MIAMI, FLORIDA 33166

WALTER A. TILLIT JR., P.E.
STRUCTURAL ENGINEER
FL. LIC.NO. 44167

12/11/02

PRODUCT REVISED
as complying with the Florida Building Code
Acceptance No 02-1118.01
Expiration Date 03/04/06
By
Miami-Dade Product Control Division

RESERVED FOR METRO-DADE USE ONLY

YKK AP AMERICA, INC.
5630 GWALTNEY DRIVE
ATLANTA, GEORGIA 30336

SYSTEM	SCALE
YHC 300 INSULATED GLAZING	1/2
DESCRIPTION: ANCHOR BOLT GUIDE -SINGLE SPAN-	
DRAWING NUMBER: YHC-300-OG-LI	REV.

APPROVED BY	DRAWN BY	DATE	SHEET NO.
JIA	JIA	8/05/02	23 OF 30

G:\SYSDWGS\YHC3000G\DADE\INSULATED\LARGEMISSILE\YHC300P23LI.DWG

REV.	DESCRIPTION	BY	DATE

YHC 300 O/G TWIN SPAN

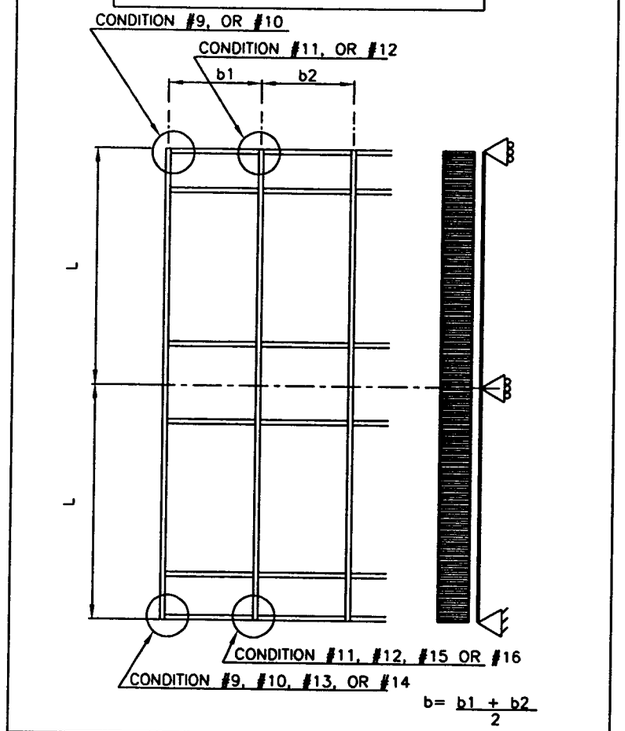

NOTES:

ANCHORING INTO CONCRETE ASSUMING THE FOLLOWING:

1. CONCRETE TO BE 3000 PSI MIN.
2. EDGE DISTANCE AS SHOWN MIN.
3. SIZES AND EMBEDMENT AS LISTED

APPROVED ANCHOR BOLT TYPES:
NOTE: ALL ANCHORS LISTED BELOW, WHEN USED IN THE CONDITIONS SHOWN HEREIN, MEET THE CAPACITY OF THE SYSTEM AS DETERMINED IN SHEET 22.

A) 3/8"POWER-BOLTS,
WITH 2 1/2" EMBEDMENT INTO CONCRETE.

B) 3/8"POWER-BOLTS,
WITH 3 1/2" EMBEDMENT INTO CONCRETE.

C) 1/2" POWER-BOLTS,
WITH 3" EMBEDMENT INTO CONCRETE.

D) 1/2" POWER-BOLTS,
WITH 4" EMBEDMENT INTO CONCRETE.

E) 3/8" BOLT GR. 5 STEEL,
W/ NUT & WASHERS INTO STEEL STRUCTURES.

F) 1/2" BOLT GR. 5 STEEL,
W/ NUT & WASHERS INTO STEEL STRUCTURES.

TILLECO INC.
TILLIT TESTING & ENGINEERING COMPANY
6595 NW 36th STREET, STE. 217
MIAMI, FLORIDA 33166

CONDITION #16

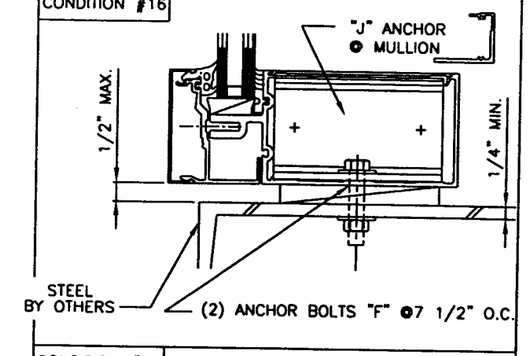

CONDITION #15

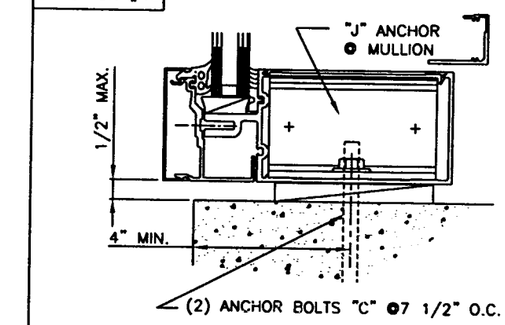

CONDITION #9

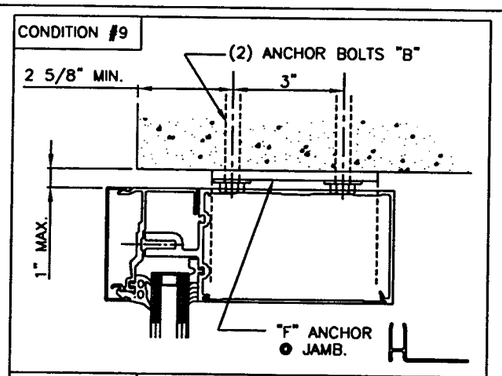

CONDITION #14

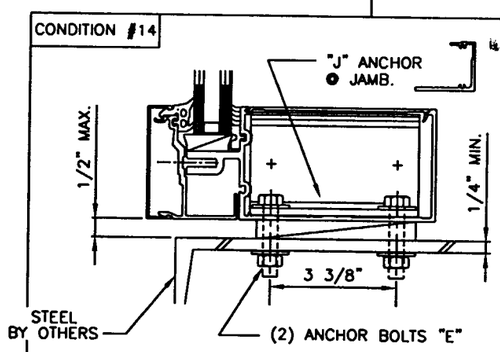

CONDITION #10

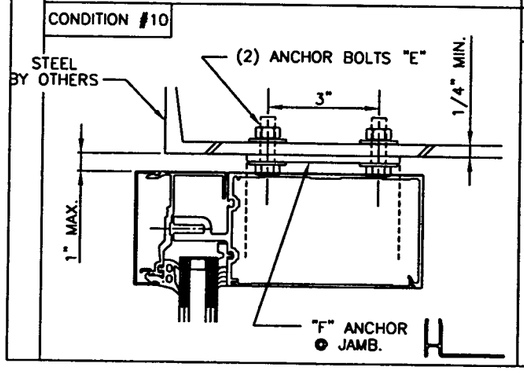

CONDITION #11

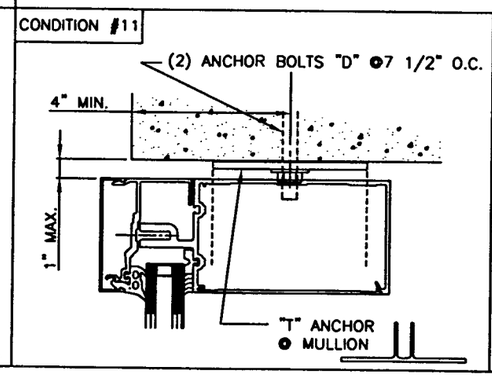

CONDITION #12

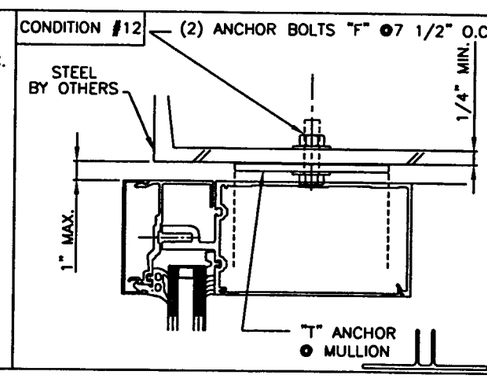

CONDITION #13

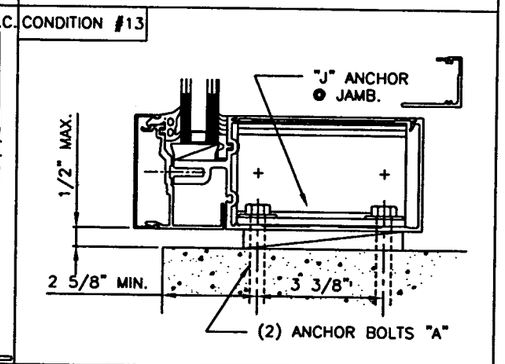

WALTER A. TILLIT JR., P.E.
STRUCTURAL ENGINEER
FL. LIC.NO. 44137

12/11/02

PRODUCT REVISED
as complying with the Florida Building Code
Acceptance No. 02-111801
Expiration Date 03/04/06
By
Miami Dade Product Control Division

RESERVED FOR METRO-DADE USE ONLY

YKK AP AMERICA, INC.
5630 GWALTNEY DRIVE
ATLANTA, GEORGIA 30336

SYSTEM			SCALE
YHC 300 INSULATED GLAZING			1/2
DESCRIPTION: ANCHOR BOLT GUIDE -TWIN SPAN-			
DRAWING NUMBER: YHC-300-OG-LI			REV.
APPROVED BY: JIA	DRAWN BY: JIA	DATE: 8/5/02	SHEET NO. 24 of 30

G:\SYSDWGS\YHC3000G\DADE\INSULATED\LARGEMISSILE\YHC300P24LI.DWG

MAXIMUM DESIGN WIND LOAD "W" (psf) SCHEDULE FOR A GIVEN GLASS TYPE AND GLASS PANEL DIMENSIONS WIDTH "b" (in) x LENGTH "a" (in)

REV.	DESCRIPTION	BY	DATE

GLASS TYPE "A1"

WIDTH "b"	LENGTH "a"	MAXIMUM DESIGN LOAD "W"
24"	from 24" to 42"	±90.0
	48"	±81.0
	54"	±75.0
	60"	±70.0
	66"	±66.0
	72"	±63.0
	78"	±61.0
	84"	±59.0
	90"	±58.0
	96"	±57.0
	102"	±56.0
	108"	±55.0
	114"	±54.0
	120"	±53.0
30"	30"	±90.0
	36"	±84.9
	42"	±73.2
	48"	±62.4
	54"	±55.8
	60"	±50.3
	66"	±47.0
	72"	±43.9
	78"	±41.4
	84"	±39.9
	90"	±38.7
	96"	±37.6
	102"	±36.7
	108"	±36.0
	114"	±35.3
	120"	±34.7

WIDTH "b"	LENGTH "a"	MAXIMUM DESIGN LOAD "W"
36"	36"	±74.0
	42"	±62.9
	48"	±55.4
	54"	±49.2
	60"	±43.7
	66"	±39.6
	72"	±36.2
	78"	±32.5
	84"	±30.3
	90"	±28.9
	96"	±27.6
	102"	±26.4
	108"	±25.6
	114"	±25.0
	120"	±24.4
42"	42"	±57.2
	48"	±50.6
	54"	±45.8
	60"	±40.7
	66"	±37.1
	72"	±33.2
	78"	±30.0
	84"	±27.3
	90"	±25.2
	96"	±23.4
	102"	±21.9
	108"	±20.7
	114"	±20.0
	120"	±19.3

WIDTH "b"	LENGTH "a"	MAXIMUM DESIGN LOAD "W"
48"	48"	±47.3
	54"	±42.2
	60"	±39.2
	66"	±35.4
	72"	±31.9
	78"	±29.1
	84"	±26.5
	90"	±24.4
	96"	±22.4
	102"	±20.6
	108"	±19.3
	112"	±18.5
54"	54"	±39.8
	60"	±36.6
	66"	±33.7
	72"	±30.5
	78"	±28.2
	84"	±25.9
	90"	±24.0
	96"	±22.1
	100"	±20.8
60"	60"	±34.3
	66"	±31.1
	72"	±29.1
	78"	±27.0
	84"	±25.0
	90"	±23.6
66"	66"	±29.4
	72"	±27.3
	78"	±25.5
	82"	±24.6
72"	72"	±25.6
	75"	±24.8

GLASS TYPE "A2"

WIDTH "b"	LENGTH "a"	MAXIMUM DESIGN LOAD "W"
24"	from 24" to 120"	±90.0
30"	from 30" to 66"	±90.0
	72"	±87.8
	78"	±82.8
	84"	±79.9
	90"	±77.4
	96"	±75.3
	102"	±73.5
	108"	±72.0
	114"	±70.6
	120"	±69.4
36"	from 36" to 54"	±90.0
	60"	±87.4
	66"	±79.3
	72"	±72.4
	78"	±65.1
	84"	±60.6
	90"	±57.9
	96"	±55.2
	102"	±52.9
	108"	±51.2
	114"	±50.0
	120"	±48.9
42"	from 42" to 54"	±90.0
	60"	±81.4
	66"	±74.3
	72"	±66.5
	78"	±60.1
	84"	±54.6
	90"	±50.4
	96"	±46.9
	102"	±43.9
	108"	±41.5
	114"	±40.0
	120"	±38.7

WIDTH "b"	LENGTH "a"	MAXIMUM DESIGN LOAD "W"
48"	48"	±90.0
	54"	±84.5
	60"	±78.4
	66"	±70.9
	72"	±63.9
	78"	±58.2
	84"	±53.1
	90"	±48.9
	96"	±44.8
	102"	±41.2
	108"	±38.6
	112"	±37.1
54"	54"	±79.6
	60"	±73.2
	66"	±67.4
	72"	±61.1
	78"	±56.5
	84"	±51.8
	90"	±48.1
	96"	±44.3
	100"	±41.6
60"	60"	±68.5
	66"	±62.3
	72"	±58.3
	78"	±54.0
	84"	±50.1
	90"	±47.2
66"	66"	±58.9
	72"	±54.6
	78"	±51.0
	82"	±49.2
72"	72"	±51.3
	75"	±49.7

GLASS TYPE "A3"

WIDTH "b"	LENGTH "a"	MAXIMUM DESIGN LOAD "W"
24"	from 24" to 120"	±90.0
30"	from 30" to 120"	±90.0
36"	from 36" to 120"	±90.0
42"	from 42" to 96"	±90.0
	102"	±87.8
	108"	±82.9
	114"	±80.1
	120"	±77.4

WIDTH "b"	LENGTH "a"	MAXIMUM DESIGN LOAD "W"
48"	from 48" to 89"	±90.0
	96"	±89.6
	102"	±82.3
	108"	±77.1
	112"	±74.2
54"	from 54" to 90"	±90.0
	96"	±89.6
	100"	±83.2
57"	from 57" to 95"	±90.0
60"	from 60" to 90"	±90.0
66"	from 60" to 82"	±90.0
72"	from 72" to 75"	±90.0

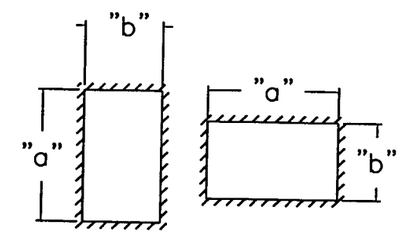

a ≥ b ALWAYS

GLASS PANEL SCHEDULE LEGEND

DIM. a & b REFER TO D.L.O. ON SHOP DRAWINGS.

GLAZING DETAIL

FOR GLASS TYPES "A1", "A2" & "A3"

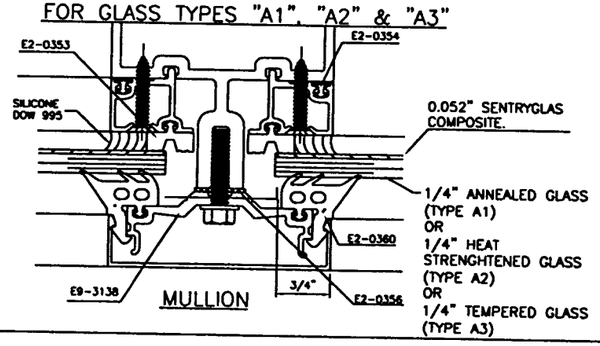

PRODUCT REVISED
as complying with the Florida Buiding Code
Acceptance No 02-1118.01
Expiration Date 03/04/06
By
Miami Dade Product Control Division

WALTER A. TILLIT JR., P.E.
STRUCTURAL ENGINEER
REGISTRATION NO. 41167

TILTECO INC.
TILLIT TESTING & ENGINEERING COMPANY
6595 NW 36th STREET, STE. 217
MIAMI, FLORIDA 33166

12/11/02

RESERVED FOR METRO-DADE USE ONLY

YKK AP AMERICA, INC.
5630 GWALTNEY DRIVE
ATLANTA, GEORGIA 30336

SYSTEM	SCALE
YHC 300 INSULATED GLAZING SYS.	1/2

DESCRIPTION: GLASS CAPACITY CHARTS

DRAWING NUMBER	REV.
YHC-300-OG-LI	

APPROVED BY	DRAWN BY	DATE	SHEET NO.
JIA	JIA	8/5/02	25 OF 30

G:\SYSDWGS\YHC300OG\DADE\INSULATED\LARGEMISSILE\YHC300p25LI.DWG

MAXIMUM DESIGN WIND LOAD "W" (psf) SCHEDULE FOR A GIVEN GLASS TYPE AND GLASS PANEL DIMENSIONS WIDTH "b" (in) x LENGTH "a" (in)

REV.	DESCRIPTION	BY	DATE

GLASS TYPE "E1"

WIDTH "b"	LENGTH "a"	MAXIMUM DESIGN LOAD "W"
24"	from 24" to 120"	±90.0
30"	from 30" to 60"	±90.0
	66"	±89.3
	72"	±84.2
	78"	±79.9
	84"	±77.0
	90"	±74.9
	96"	±73.1
	102"	±71.6
	108"	±70.2
	114"	±68.9
	120"	±67.8
36"	from 36" to 48"	±90.0
	54"	±79.8
	60"	±72.7
	66"	±66.9
	72"	±62.1
	78"	±59.3
	84"	±56.7
	90"	±54.5
	96"	±52.7
	102"	±51.0
	108"	±49.6
	114"	±48.3
	120"	±47.2
42"	42"	±87.6
	48"	±75.4
	54"	±66.4
	60"	±60.1
	66"	±55.1
	72"	±50.8
	78"	±46.9
	84"	±44.4
	90"	±42.2
	96"	±40.3
	102"	±38.7
	108"	±37.6
	114"	±36.6
	120"	±35.7

WIDTH "b"	LENGTH "a"	MAXIMUM DESIGN LOAD "W"
48"	48"	±66.6
	54"	±58.9
	60"	±53.3
	66"	±47.3
	72"	±43.5
	78"	±40.1
	84"	±37.3
	90"	±35.5
	96"	±33.6
	102"	±31.8
	108"	±30.5
	112"	±29.5
54"	54"	±53.9
	60"	±47.6
	66"	±43.6
	72"	±39.6
	78"	±36.8
	84"	±34.0
	90"	±31.4
	96"	±29.7
	100"	±28.7
60"	60"	±52.7
	66"	±47.7
	72"	±44.2
	78"	±40.9
	84"	±37.5
	90"	±35.3
66"	66"	±44.6
	72"	±41.1
	78"	±37.9
	82"	±36.6
72"	72"	±38.3
	75"	±37.0

GLASS TYPE "E2"

WIDTH "b"	LENGTH "a"	MAXIMUM DESIGN LOAD "W"
24"	from 24" to 120"	±90.0
30"	from 30" to 120"	±90.0
36"	from 36" to 118"	±90.0
42"	from 42" to 78"	±90.0
	84"	±88.7
	90"	±84.5
	96"	±80.6
	102"	±77.5
	108"	±75.2
	114"	±73.2
	120"	±71.5
48"	from 48" to 66"	±90.0
	72"	±87.0
	78"	±80.2
	84"	±74.5
	90"	±70.9
	96"	±67.1
	102"	±63.6
	108"	±60.9
	112"	±59.0
54"	from 54" to 60"	±90.0
	66"	±87.2
	72"	±79.3
	78"	±73.5
	84"	±68.0
	90"	±62.8
	96"	±59.4
	100"	±57.4
60"	from 60" to 66"	±90.0
	72"	±88.5
	78"	±81.9
	84"	±74.9
	90"	±70.6
66"	66"	±89.3
	72"	±82.2
	78"	±75.7
	82"	±73.2
72"	72"	±76.6
	75"	±74.0

GLASS TYPE "E3"

WIDTH "b"	LENGTH "a"	MAXIMUM DESIGN LOAD "W"
24"	from 24" to 120"	±90.0
30"	from 30" to 120"	±90.0
36"	from 36" to 120"	±90.0
42"	from 42" to 120"	±90.0
48"	from 48" to 112"	±90.0
54"	from 54" to 100"	±90.0
60"	from 60" to 90"	±90.0
66"	from 66" to 82"	±90.0
72"	from 72" to 75"	±90.0

TILLECO INC.
TILLIT TESTING & ENGINEERING COMPANY
6595 NW 36th STREET, STE. 217
MIAMI, FLORIDA 33166

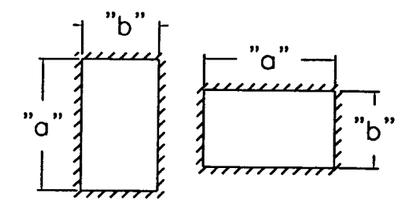

a ≥ b ALWAYS

GLASS PANEL SCHEDULE LEGEND

DIM. a & b REFER TO D.L.O. ON SHOP DRAWINGS.

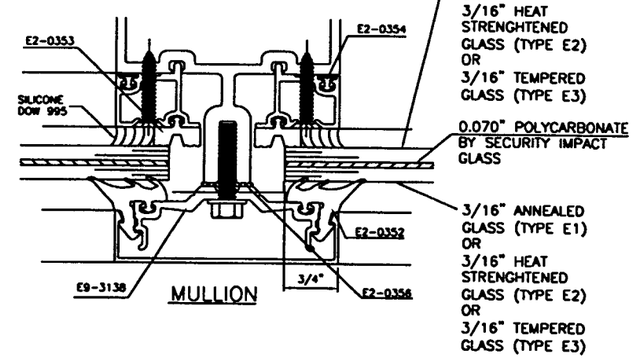

GLAZING DETAIL

FOR GLASS TYPES "E1", "E2", & "E3"

PRODUCT REVISED
as complying with the Florida Building Code
Acceptance No. 02-1118.01
Expiration Date 08/04/06
By
Miami-Dade Product Control Division

RESERVED FOR METRO-DADE USE ONLY

YKK AP AMERICA, INC.
5630 GWALTNEY DRIVE
ATLANTA, GEORGIA 30336

SYSTEM	SCALE
YHC 300 INSULATED GLAZING SYS.	1/2

DESCRIPTION: GLASS CAPACITY CHARTS

DRAWING NUMBER	REV.
YHC-300-OG-LI	

APPROVED BY	DRAWN BY	DATE	SHEET NO.
JIA	JIA	8/5/02	26 OF 30

G:\SYSDWGS\YHC300OG\DADE\INSULATED\LARGEMISSILE\YHC300p26LI.DWG

MAXIMUM DESIGN WIND LOAD "W" (psf) SCHEDULE FOR A GIVEN GLASS TYPE AND GLASS PANEL DIMENSIONS WIDTH "b" (in) x LENGTH "a" (in)

REV.	DESCRIPTION	BY	DATE

GLASS TYPE "F1"

WIDTH "b"	LENGTH "a"	MAXIMUM DESIGN LOAD "W"
24"	from 24" to 120"	±90.0
30"	from 30" to 120"	±90.0
36"	from 36" to 96"	±90.0
	102"	±89.5
	108"	±87.1
	114"	±85.0
	118"	±83.7
42"	from 42" to 66"	±90.0
	72"	±86.9
	78"	±80.5
	84"	±76.0
	90"	±72.7
	96"	±69.8
	101"	±67.7
48"	from 48" to 54"	±90.0
	60"	±87.6
	66"	±78.1
	72"	±72.3
	78"	±67.1
	84"	±62.3
	89"	±59.9
54"	54"	±86.1
	60"	±75.6
	66"	±68.6
	72"	±62.3
	78"	±58.2
	79"	±57.5
60"	60"	±67.1
	66"	±60.7
	71"	±56.8
65"	65"	±57.6

GL. TYPES "F2" & "G".

WIDTH "b"	LENGTH "a"	MAXIMUM DESIGN LOAD "W"
24"	from 24" to 120"	±90.0
30"	from 30" to 120"	±90.0
36"	from 36" to 118"	±90.0
42"	from 42" to 101"	±90.0
48"	from 48" to 89"	±90.0
54"	from 54" to 79"	±90.0
60"	from 60" to 71"	±90.0
65"	65"	±90.0

GLASS TYPE "F3"

WIDTH "b"	LENGTH "a"	MAXIMUM DESIGN LOAD "W"
24"	from 24" to 120"	±90.0
30"	from 30" to 120"	±90.0
36"	from 36" to 118"	±90.0
42"	from 42" to 101"	±90.0
45"	from 45" to 95"	±90.0
48"	from 48" to 89"	±90.0
54"	from 54" to 79"	±90.0
60"	from 60" to 71"	±90.0
65"	65"	±90.0

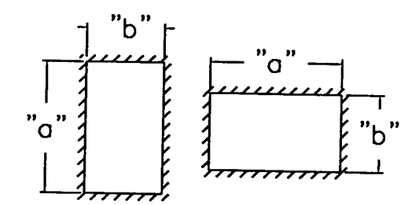

a ≥ b ALWAYS

GLASS PANEL SCHEDULE LEGEND

DIM. a & b REFER TO D.L.O. ON SHOP DRAWINGS.

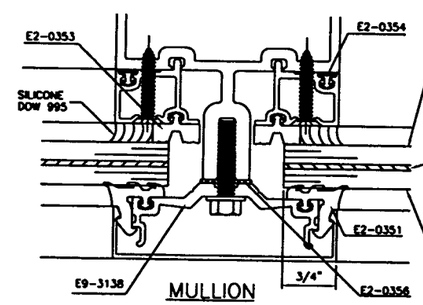

1/4" ANNEALED GLASS (TYPE F1)
OR
1/4" HEAT STRENGHTENED GLASS (TYPES F2 & G)
OR
1/4" TEMPERED GLASS (TYPE F3)

0.070" POLYCARBONATE BY SECURITY IMPACT GLASS (TYPES F1, F2, & F3)
OR
0.10" SAFLEX HP BY SOLUTIA (TYPE G)

1/4" ANNEALED GLASS (TYPE F1)
OR
1/4" HEAT STRENGHTENED GLASS (TYPES F2 & G)
OR
1/4" TEMPERED GLASS (TYPE F3)

GLAZING DETAIL

FOR GLASS TYPES "F1", "F2", "F3", & "G"

WALTER A. TILLIT JR., P.E.
STRUCTURAL ENGINEER
LIC.NO. 43137

TILTECO INC.
TILLIT TESTING & ENGINEERING COMPANY
6595 NW 36th STREET, STE. 217
MIAMI, FLORIDA 33166

12/11/02

PRODUCT REVISED
as complying with the Florida Building Code
Acceptance No 02-1118.01
Expiration Date 03/04/06
By
Miami-Dade Product Control Division

RESERVED FOR METRO-DADE USE ONLY

YKK AP AMERICA, INC.
5830 OWALTNEY DRIVE
ATLANTA, GEORGIA 30336

SYSTEM	SCALE
YHC 300 INSULATED GLAZING SYS.	1/2

DESCRIPTION: GLASS CAPACITY CHARTS

DRAWING NUMBER	REV.
YHC-300-OG-LI	

APPROVED BY	DRAWN BY	DATE	SHEET NO.
JIA	JIA	8/5/02	27 of 30

G:\SYSDWGS\YHC300OG\DADE\INSULATED\LARGEMISSILE\YHC300p27LI.DWG

REV.	DESCRIPTION	BY	DATE

MAXIMUM DESIGN WIND LOAD "W" (psf) SCHEDULE FOR A GIVEN GLASS TYPE AND GLASS PANEL DIMENSIONS WIDTH "b" (in) x LENGTH "a" (in)

GLASS TYPE "I1"

WIDTH "b"	LENGTH "a"	MAXIMUM DESIGN LOAD "W"
24"	from 24" to 120"	±90.0
30"	from 30" to 60"	±90.0
	66"	±84.7
	72"	±79.1
	78"	±74.5
	84"	±71.9
	90"	±69.6
	96"	±67.8
	102"	±66.2
	108"	±64.8
	114"	±63.5
	120"	±62.4
36"	from 36" to 48"	±90.0
	54"	±88.5
	60"	±78.7
	66"	±71.3
	72"	±65.1
	78"	±58.6
	84"	±54.5
	90"	±52.1
	96"	±49.6
	102"	±47.6
	108"	±46.1
	114"	±45.0
	120"	±44.0

WIDTH "b"	LENGTH "a"	MAXIMUM DESIGN LOAD "W"
42"	from 36" to 48"	±90.0
	54"	±82.4
	60"	±73.3
	66"	±66.9
	72"	±59.8
	78"	±54.1
	84"	±49.2
	90"	±45.4
	96"	±42.2
	102"	±39.5
	108"	±37.3
	114"	±36.0
	120"	±34.8
48"	48"	±85.2
	54"	±76.0
	60"	±70.5
	66"	±63.8
	72"	±57.5
	78"	±52.4
	84"	±47.8
	90"	±44.0
	96"	±40.3
	102"	±37.1
	108"	±34.7
	112"	±33.4

WIDTH "b"	LENGTH "a"	DESIGN LOAD "W"
54"	54"	±71.6
	60"	±65.8
	66"	±60.6
	72"	±55.0
	78"	±50.8
	84"	±46.6
	90"	±43.3
	96"	±39.8
	100"	±37.5
60"	60"	±61.7
	66"	±56.1
	72"	±52.5
	78"	±48.6
	84"	±45.1
	90"	±42.4
66"	66"	±53.0
	72"	±49.1
	78"	±45.9
	82"	±44.3
72"	72"	±46.2
	75"	±44.7

GLASS TYPE "I2"

WIDTH "b"	LENGTH "a"	MAXIMUM DESIGN LOAD "W"
24"	from 24" to 120"	±90.0
30"	from 30" to 120"	±90.0
36"	from 36" to 114"	±90.0
	120"	±88.0
42"	from 42" to 90"	±90.0
	96"	±84.4
	102"	±79.1
	108"	±74.6
	114"	±72.1
	120"	±69.6
48"	from 48" to 84"	±90.0
	90"	±86.5
	96"	±80.6
	102"	±74.1
	108"	±69.4
	112"	±66.8
54"	from 54" to 100"	±90.0
	90"	±86.5
	96"	±79.7
	100"	±74.9
60"	from 60" to 84"	±90.0
	90"	±84.9
66"	from 66" to 78"	±90.0
	82"	±88.6
72"	72"	±90.0
	75"	±89.4

GLASS TYPE "I3"

WIDTH "b"	LENGTH "a"	MAXIMUM DESIGN LOAD "W"
24"	from 24" to 120"	±90.0
30"	from 30" to 120"	±90.0
36"	from 36" to 120"	±90.0
42"	from 42" to 120"	±90.0
48"	from 48" to 112"	±90.0
54"	from 54" to 100"	±90.0
60"	from 60" to 90"	±90.0
66"	from 66" to 82"	±90.0
72"	from 72" to 75"	±90.0

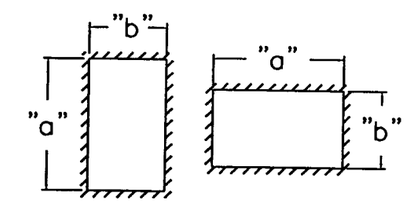

a ≥ b ALWAYS

GLASS PANEL SCHEDULE LEGEND

DIM. a & b REFER TO D.L.O. ON SHOP DRAWINGS.

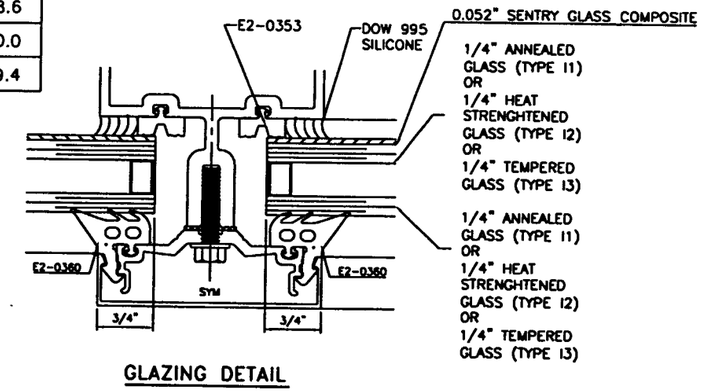

GLAZING DETAIL

FOR GLASS TYPES "I1", "I2" & "I3"

WILLIAM A. TILLIT JR., P.E.
STRUCTURAL ENGINEER
FL. LIC.NO. 48107

TILTECO INC.
TILLIT TESTING & ENGINEERING COMPANY
6595 NW 36th STREET, STE. 217
MIAMI, FLORIDA 33166

7/11/02

PRODUCT REVISED
as complying with the Florida Building Code
Acceptance No 02-1118.01
Expiration Date 03/04/06
By
Miami Dade Product Control Division

RESERVED FOR METRO-DADE USE ONLY

YKK AP AMERICA, INC.
5630 GWALTNEY DRIVE
ATLANTA, GEORGIA 30336

SYSTEM	SCALE
YHC 300 INSULATED GLAZING SYS.	1/2

DESCRIPTION: GLASS CAPACITY CHARTS

DRAWING NUMBER	REV.
YHC-300-OG-LI	

APPROVED BY	DRAWN BY	DATE	SHEET NO.
JIA	JIA	8/5/02	28 OF 30

G:\SYSDWGS\YHC3000G\DADE\INSULATED\LARGEMISSILE\YHC300p28LI.DWG

MAXIMUM DESIGN WIND LOAD "W" (psf) SCHEDULE FOR A GIVEN GLASS TYPE AND GLASS PANEL DIMENSIONS WIDTH "b" (in) x LENGTH "a" (in)

REV.	DESCRIPTION	BY	DATE

GLASS TYPE "K1"

WIDTH "b"	LENGTH "a"	MAXIMUM DESIGN LOAD "W"
24"	from 24" to 120"	±90.0
30"	from 30" to 78"	±90.0
	84"	±89.9
	90"	±87.5
	96"	±85.5
	102"	±83.6
	108"	±82.0
	114"	±80.5
	120"	±79.3
36"	from 36" to 54"	±90.0
	60"	±85.0
	66"	±78.2
	72"	±72.6
	78"	±69.2
	84"	±66.3
	90"	±63.7
	96"	±61.5
	102"	±59.6
	108"	±57.9
	114"	±56.5
	120"	±55.1
42"	42"	±90.0
	48"	±88.1
	54"	±77.5
	60"	±70.2
	66"	±64.4
	72"	±59.4
	78"	±54.8
	84"	±51.8
	90"	±49.3
	96"	±47.1
	102"	±45.3
	108"	±43.9
	114"	±42.8
	120"	±41.8

WIDTH "b"	LENGTH "a"	MAXIMUM DESIGN LOAD "W"
48"	48"	±77.9
	54"	±68.8
	60"	±62.3
	66"	±55.3
	72"	±50.8
	78"	±46.9
	84"	±43.5
	90"	±41.4
	96"	±39.2
	102"	±37.1
	108"	±35.6
	112"	±34.8
54"	54"	±62.9
	60"	±55.6
	66"	±50.9
	72"	±46.3
	78"	±43.0
	84"	±39.7
	90"	±36.7
	96"	±34.7
	100"	±33.5
60"	60"	±62.1
	66"	±56.2
	72"	±52.2
	78"	±48.3
	84"	±44.2
	90"	±41.6
66"	66"	±52.6
	72"	±48.5
	78"	±44.7
	82"	±43.1
72"	72"	±45.2
	75"	±43.6

GLASS TYPE "K2"

WIDTH "b"	LENGTH "a"	MAXIMUM DESIGN LOAD "W"
24"	from 24" to 120"	±90.0
30"	from 30" to 120"	±90.0
36"	from 36" to 120"	±90.0
42"	from 42" to 96"	±90.0
	102"	±89.2
	108"	±86.6
	114"	±84.3
	120"	±82.3
48"	from 48" to 78"	±90.0
	84"	±85.8
	90"	±81.7
	96"	±77.3
	102"	±73.2
	108"	±70.2
	112"	±68.7
54"	from 54" to 72"	±90.0
	78"	±84.7
	84"	±78.3
	90"	±72.3
	96"	±68.4
	100"	±66.1
60"	from 60" to 78"	±90.0
	84"	±87.3
	90"	±82.3
66"	from 66" to 72"	±90.0
	78"	±88.3
	82"	±85.6
72"	72"	±89.3
	75"	±86.2

GLASS TYPE "K3"

WIDTH "b"	LENGTH "a"	MAXIMUM DESIGN LOAD "W"
24"	from 24" to 120"	±90.0
30"	from 30" to 120"	±90.0
36"	from 36" to 120"	±90.0
42"	from 42" to 120"	±90.0
48"	from 48" to 112"	±90.0
54"	from 54" to 100"	±90.0
60"	from 60" to 90"	±90.0
66"	from 66" to 82"	±90.0
72"	from 72" to 75"	±90.0

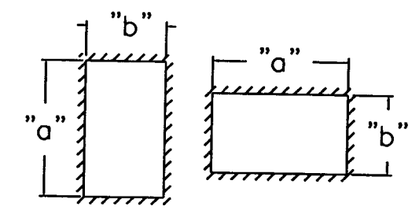

a ≥ b ALWAYS

GLASS PANEL SCHEDULE LEGEND

DIM. a & b REFER TO D.L.O. ON SHOP DRAWINGS.

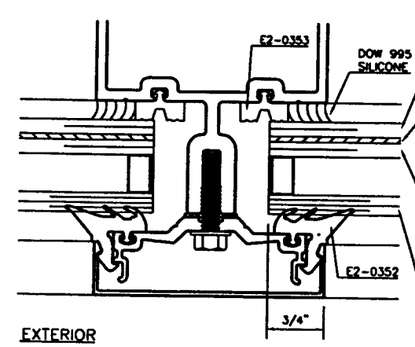

JAMB/HORIZONTAL

3/16" ANNEALED GLASS (TYPE K1) OR 3/16" HEAT STRENGHTENED GLASS (TYPE K2) OR 3/16" TEMPERED GLASS (TYPE K3)

0.070" POLYCARBONATE BY SECURITY IMPACT GLASS

3/16" ANNEALED GLASS (TYPE K1) OR 3/16" HEAT STRENGHTENED GLASS (TYPE K2) OR 3/16" TEMPERED GLASS (TYPE K3)

1/4" ANNEALED GLASS (TYPE K1) OR 1/4" HEAT STRENGHTENED GLASS (TYPE K2) OR 1/4" TEMPERED GLASS (TYPE K3)

GLAZING DETAIL

FOR GLASS TYPES "K1", "K2", & "K3"

WALTER A. TILLIT JR., P.E.
STRUCTURAL ENGINEER
FL. LIC.NO. 44167

TILLECO INC.
TILLIT TESTING & ENGINEERING COMPANY
8596 NW 30th STREET, STE. 217
MIAMI, FLORIDA 33166

12/11/02

PRODUCT REVISED
as complying with the Florida Building Code
Acceptance No 02-1118.01
Expiration Date 03/04/06
By [illegible]
Miami-Dade Product Control Division

RESERVED FOR METRO-DADE USE ONLY

YKK AP America
YKK AP AMERICA, INC.
5630 GWALTNEY DRIVE
ATLANTA, GEORGIA 30336

SYSTEM	SCALE
YHC 300 INSULATED GLAZING SYS.	1/2

DESCRIPTION: GLASS CAPACITY CHARTS

DRAWING NUMBER	REV.
YHC-300-OG-LI	

APPROVED BY	DRAWN BY	DATE	SHEET NO.
JIA	JIA	8/5/02	29 OF 30

G:\SYSDWGS\YHC300OG\DADE\INSULATED\LARGEMISSILE\YHC300p29LI.DWG

MAXIMUM DESIGN WIND LOAD "W" (psf) SCHEDULE FOR A GIVEN GLASS TYPE AND GLASS PANEL DIMENSIONS WIDTH "b" (in) x LENGTH "a" (in)

REV.	DESCRIPTION	BY	DATE

GLASS TYPE "L1"

WIDTH "b"	LENGTH "a"	MAXIMUM DESIGN LOAD "W"
24"	from 24" to 120"	±90.0
30"	from 30" to 120"	±90.0
36"	from 36" to 108"	±90.0
	114"	±88.7
	120"	±86.7
42"	from 42" to 72"	±90.0
	78"	±83.9
	84"	±79.2
	90"	±75.9
	96"	±72.9
	102"	±70.2
	108"	±67.9
	114"	±65.8
	120"	±64.4
48"	from 48" to 60"	±90.0
	66"	±81.4
	72"	±75.4
	78"	±70.0
	84"	±65.0
	90"	±62.0
	96"	±59.2
	102"	±56.9
	108"	±54.7
	112"	±53.4
54"	54"	±89.8
	60"	±78.8
	66"	±71.6
	72"	±65.0
	78"	±60.7
	84"	±56.7
	90"	±53.0
	96"	±49.6
	100"	±48.0

WIDTH "b"	LENGTH "a"	MAXIMUM DESIGN LOAD "W"
60"	60"	±70.0
	66"	±63.3
	72"	±58.4
	78"	±53.5
	84"	±49.1
	90"	±46.1
66"	66"	±58.5
	72"	±53.2
	78"	±48.2
	82"	±46.1
72"	72"	±59.6
	75"	±57.1

GLASS TYPES "L2", "M"

WIDTH "b"	LENGTH "a"	MAXIMUM DESIGN LOAD "W"
24"	from 24" to 120"	±90.0
30"	from 30" to 120"	±90.0
36"	from 36" to 120"	±90.0
42"	from 42" to 120"	±90.0
48"	from 48" to 112"	±90.0
54"	from 54" to 100"	±90.0
60"	from 60" to 90"	±90.0
66"	from 66" to 82"	±90.0
72"	from 72" to 75"	±90.0

GLASS TYPE "L3"

WIDTH "b"	LENGTH "a"	MAXIMUM DESIGN LOAD "W"
24"	from 24" to 120"	±90.0
30"	from 30" to 120"	±90.0
36"	from 36" to 120"	±90.0
42"	from 42" to 120"	±90.0
48"	from 48" to 112"	±90.0
54"	from 54" to 100"	±90.0
60"	from 60" to 90"	±90.0
66"	from 66" to 82"	±90.0
72"	from 72" to 75"	±90.0

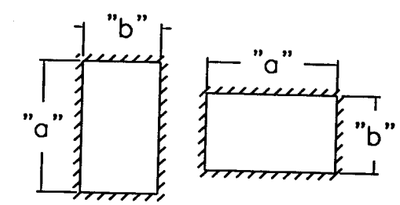

a ≥ b ALWAYS

GLASS PANEL SCHEDULE LEGEND

DIM. a & b REFER TO D.L.O. ON SHOP DRAWINGS.

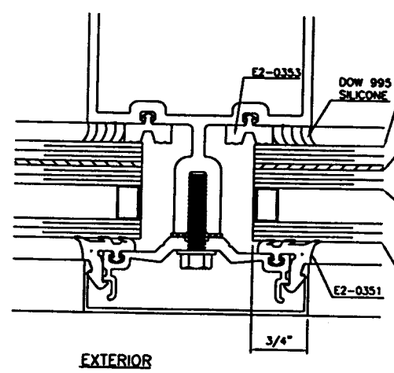

JAMB/HORIZONTAL

1/4" ANNEALED GLASS (TYPE L1)
OR
1/4" HEAT STRENGHTENED GLASS (TYPES L2, & M)
OR
1/4" TEMPERED GLASS (TYPE L3)

0.070" POLYCARBONATE BY SECURITY IMPACT GLASS (TYPES L1, L2, & L3)
OR
0.10" SAFLEX HP BY SOLUTIA (TYPE M)

1/4" ANNEALED GLASS (TYPE L1)
OR
1/4" HEAT STRENGHTENED GLASS (TYPES L2, & M)
OR
1/4" TEMPERED GLASS (TYPE L3)

1/4" ANNEALED GLASS (TYPE L1)
OR
1/4" HEAT STRENGHTENED GLASS (TYPES L2, & M)
OR
1/4" TEMPERED GLASS (TYPE L3)

GLAZING DETAIL

FOR GLASS TYPES "L1", "L2", "L3", "M"

TILLECO INC.
TILLIT TESTING & ENGINEERING COMPANY
8595 NW 36th STREET, STE. 217
MIAMI, FLORIDA 33166,

WALTER A. TILLIT JR., P.E.
STRUCTURAL ENGINEER
REG. NO. 4 [illegible]

12/11/02

PRODUCT REVISED
as complying with the Florida Building Code
Acceptance No. 02-1118.01
Expiration Date 03/04/06
By [illegible]
Miami Dade Product Control Division

RESERVED FOR METRO-DADE USE ONLY

YKK AP AMERICA, INC.
5630 CHALTNEY DRIVE
ATLANTA, GEORGIA 30336

SYSTEM	SCALE
YHC 300 INSULATED GLAZING SYS.	1/2

DESCRIPTION: GLASS CAPACITY CHARTS

DRAWING NUMBER	REV.
YHC-300-OG-LI	

APPROVED BY	DRAWN BY	DATE	SHEET NO.
JIA	JIA	8/5/02	30 OF 30

G:\SYSDWGS\YHC300OG\DADE\INSULATED\LARGEMISSILE\YHC300p30LI.DWG