MIAMI-DADE

BUILDING CODE COMPLIANCE OFFICE (BCCO)
PRODUCT CONTROL DIVISION

MIAMI-DADE COUNTY, FLORIDA
METRO-DADE FLAGLER BUILDING
140 WEST FLAGLER STREET, SUITE 1603
MIAMI, FLORIDA 33130-1563
(305) 375-2901 FAX (305) 375-2908

NOTICE OF ACCEPTANCE (NOA)

Lawson Industries, Inc.
8501 NW 90th Street
Medley, FL 33166

SCOPE:
This NOA is being issued under the applicable rules and regulations governing the use of construction materials. The documentation submitted has been reviewed by Miami-Dade County Product Control Division and accepted by the Board of Rules and Appeals (BORA) to be used in Miami Dade County and other areas where allowed by the Authority Having Jurisdiction (AHJ).
This NOA shall not be valid after the expiration date stated below. The Miami-Dade County Product Control Division (In Miami Dade County) and/or the AHJ (in areas other than Miami Dade County) reserve the right to have this product or material tested for quality assurance purposes. If this product or material fails to perform in the accepted manner, the manufacturer will incur the expense of such testing and the AHJ may immediately revoke, modify, or suspend the use of such product or material within their jurisdiction. BORA reserves the right to revoke this acceptance, if it is determined by Miami-Dade County Product Control Division that this product or material fails to meet the requirements of the applicable building code.
This product is approved as described herein, and has been designed to comply with the High Velocity Hurricane Zone of the Florida Building Code.

DESCRIPTION: Series SH-7500 Aluminum Single Hung Window

APPROVAL DOCUMENT: Drawing No. **LTU-7500**, dated 11/21/02, with revision #2 dated 11/21/02, titled "Series-7500 Single Hung", sheets 1 through 7, prepared by manufacturer, signed and sealed by Thomas J. Sotos, P.E., bearing the Miami-Dade County Product Control Approval stamp with the Notice of Acceptance number and approval date by the Miami-Dade County Product Control Division.

MISSILE IMPACT RATING: None

LABELING: Each unit shall bear a permanent label with the manufacturer's name or logo, city, state and following statement: "Miami-Dade County Product Control Approved", unless otherwise noted herein.

RENEWAL of this NOA shall be considered after a renewal application has been filed and there has been no change in the applicable building code negatively affecting the performance of this product.

TERMINATION of this NOA will occur after the expiration date or if there has been a revision or change in the materials, use, and/or manufacture of the product or process. Misuse of this NOA as an endorsement of any product, for sales, advertising or any other purposes shall automatically terminate this NOA. Failure to comply with any section of this NOA shall be cause for termination and removal of NOA.

ADVERTISEMENT: The NOA number preceded by the words Miami-Dade County, Florida, and followed by the expiration date may be displayed in advertising literature. If any portion of the NOA is displayed, then it shall be done in its entirety.

INSPECTION: A copy of this entire NOA shall be provided to the user by the manufacturer or its distributors and shall be available for inspection at the job site at the request of the Building Official.
This NOA **revise and replace NOA # 01-1106.03** and consists of this page 1 as well as approval document mentioned above.
The submitted documentation was reviewed by **Manuel Perez, P.E.**

Lawson Industry, Inc.

NOTICE OF ACCEPTANCE: EVIDENCE SUBMITTED
(For File ONLY. Not part of NOA.)

A. DRAWINGS

1. Manufacturer's die drawings and sections.
2. Drawing No. **LTU-7500**, dated 11/21/02, with revision #3 dated 02/12/03, titled "Series-7500 Single Hung", sheets 1 through 7, prepared by manufacturer, signed and sealed by Thomas J. Sotos, P.E.

B. TESTS

1. Test reports on:1) Air Infiltration Test, per PA 202-94.
   2) Uniform Load Static Air Pressure Test, per PA 202-94.
   3) Water Resistance Test, per PA 202-94.
   4) Forced Entry Resistance Test, per AAMA 1302.5-76.
   along with marked-up drawings and installation diagram of a heavy duty aluminum single hung window glazed with 3/16" annealed glass, prepared by Fenestration Testing Laboratory, Inc. Test Report No. **FTL-1890**, dated 12/17/97 reissued on 02/09/98, signed and sealed by Gilbert Diamond, P.E. for the following tests:
2. Test reports on:1) Air Infiltration Test, per PA 202-94.
   2) Uniform Load Static Air Pressure Test, per PA 202-94.
   3) Water Resistance Test, per PA 202-94.
   4) Forced Entry Resistance Test, per AAMA 1302.5-76.
   along with marked-up drawings and installation diagram of a fin frame, heavy duty aluminum single hung window glazed with 3/16" annealed glass, marked-up prepared by Fenestration Testing Laboratory, Test Report No. **FTL-1891**,dated 12/23/97 reissued on 02/09/98, signed and sealed by Gilbert Diamond, P.E.
3. Test reports on: 1) Uniform Load Static Air Pressure Test, per PA 202-94. along with marked-up drawings and installation diagram of a flange frame, standard rail aluminum single hung window glazed with 3/16" annealed glass, prepared by Fenestration Testing Laboratory Test Report No. **FTL-1892**, dated 12/29/97 reissued on 02/09/98, signed and sealed by Gilbert Diamond, P.E.
4. Test reports on: 1) Uniform Load Static Air Pressure Test, per PA 202-94. along marked-up drawings and installation diagram of a flange frame, standard rail aluminum single hung window glazed with 1/8" annealed glass, prepared by Fenestration Testing Laboratory, Test report No. **FTL-1893** dated 12/29/97 reissued on 02/09/98, signed and sealed by Gilbert Diamond, P.E.

Manuel Perez, P.E.
Product Control Examiner
NOA No 02-1203.02
Expiration Date: December 10, 2006
Approval Date: March 6, 2003

NOTICE OF ACCEPTANCE: EVIDENCE SUBMITTED
(For File ONLY. Not part of NOA.)

5. Test reports: 1) Uniform Load Static Air Pressure Test, per PA 202-94. along with the manufacturer's parts and section drawings of a fin frame, standard rail aluminum single hung window glazed with 1/8" annealed glass, prepared by Fenestration Testing Laboratory, Inc, Test Report No. **FTL-1894** dated 12/29/97 reissued on 02/09/98, signed and sealed by Gilbert Diamond, P.E.
6. Test report on: 1) Uniform Load Static Air Pressure Test, per PA 202-94. along with the manufacturer's parts and section drawings of a flange frame, standard rail aluminum single hung window glazed with 1/8" annealed glass, prepared by Fenestration Testing Laboratory, Inc. Test Report No. **FTL-1895** dated 12/29/97 reissued on 02/09/98, signed and sealed by Gilbert Diamond, P.E.

C. CALCULATIONS

1. Anchor Calculations and structural analysis, prepared by manufacturer, dated 12/11/2002, signed and sealed by Thomas J. Sotos, P.E.

D. MATERIAL CERTIFICATIONS

1. None.

E. STATEMENTS

1. Statement letter of conformance, dated November 22, 2002, signed and sealed by Thomas J. Sotos, P.E.
2. Statement letter of no financial interest, dated Feb. 11, 2003, signed and sealed by Thomas J. Sotos, P.E.
3. Letter of *Adoption of as his Own, the Work of Another Engineer* per Section 61G15-27 of the FBPE, dated November 25th,2002 signed and sealed by Thomas J. Sotos, P.E.

F. OTHER

1. Notice of Acceptance No. **01-1106.03**, issued to Lawson Industries, Inc. for their Series SH-7500 Aluminum Single Hung Window, approved on 11/29/01 and expiring on 12/10/06.

Manuel Perez, P.E.
Product Control Examiner
NOA No 02-1203.02
Expiration Date: December 10, 2006
Approval Date: March 6, 2003

" PRODUCT SPECIFIC CONDITIONS "

1 DESCRIPTION OF PRODUCT:

1.1 UNIT TYPE:

1.1.1 FLANGE FRAME ALUMINUM SINGLE HUNG WINDOW

1.1.2 FIN FRAME ALUMINUM SINGLE HUNG WINDOW

1.2 MODEL DESIGNATION:

SERIES: SH-7500 (FLANGE OR FIN FRAME)

1.3 OVERALL SIZES: (LARGEST TESTED UNITS)

1.3.1 FLANGE: 53 1/8" w. X 74 1/4" h. X 1 7/8"deep

1.3.2 FIN: 54 3/8" w. X 75 1/2" h. x 1 7/8" deep

1.4 CONFIGURATION: O/X

1.5 NO. & SIZE OF VENTS: (LARGEST TESTED UNITS)

1.5.1 FLANGE: 50 3/8" w. X 36 3/4" h.

1.5.2 FIN: 50 3/8" w. X 36 3/4" h.

2 MATERIAL CHARACTERISTICS:

2.1 FRAME AND VENT MATERIAL: ALUMINUM ALLOY 6063-T5 & T6 (see specific extrusion type).

2.2 GLAZING:

2.2.1 GLAZING MATERIAL: 1/8" ANNEALED GLASS. (DSB) (LAB. No. 1890, 1891, & 1892)
3/16" ANNEALED GLASS. (LAB. No. 1893, 1894, & 1895)

2.2.2 GLAZING METHOD: EXTERIOR GLAZED USING A CLEAR COLORED ADHESIVE "SILICONE" BEDDING COMPOUND (G.E.1001) AND ALUMINUM ROLLED GLAZING BEAD.

2.2.3 DAYLIGHT OPENING SIZE: (LARGEST TESTED UNITS)
FIXED LIGHT: 48 7/8" w. X 33 3/4" h.(FLANGE OR FIN FRAME)
OPERABLE VENT: 48 7/8" w. X 33 3/4" h.(FLANGE OR FIN FRAME)

2.3 FRAME CONSTRUCTION: ALL ALUMINUM SECTIONS (0.062" typ. wall), BUTT JOINT, FRAME CORNERS ARE SECURED WITH TWO #8 X 3/4" SHEET METAL SCREWS.

		Extrusion Type:	Alloy:	Dimensions:	
2.3.1	FLANGE HEAD:	SOLID	6063-T5	0.749" ext. face, X 0.687" int. face x 1.875" deep	(DWG. #L-7501)
	FIN HEAD:	SOLID	6063-T5	0.249" ext. face, X 0.687" int. face x 1.875" deep	(DWG. #L-7519)
2.3.2	FLANGE JAMBS:	SOLID	6063-T5	1.688" ext. face, X 1.125" int. face x 1.875" deep	(DWG. #L-7504)
	FIN JAMBS:	SOLID	6063-T5	1.188" ext. face, X 1.125" int. face x 1.875" deep	(DWG. #L-7521)
2.3.3	FLANGE SILL:	SOLID	6063-T6	0.687" ext. face, X 2.299" int. face x 1.875" deep	(DWG. #L-7502)
	FIN SILL:	SOLID	6063-T5	0.187" ext. face, X 2.299" int. face x 1.875" deep	(DWG. #L-7520)
2.3.4	MEETING RAIL STD.:	HOLLOW	6063-T6	1.094" ext. face, X 1.594" int. face x 0.780" deep	(DWG. #L-7503)
2.3.4	MEETING RAIL HD.:	HOLLOW	6063-T6	1.094" ext. face, X 1.594" int. face x 0.780" deep	(DWG. #L-7508)

2.4 VENT CONSTRUCTION: ALL ALUMINUM SECTIONS (0.062" typ. wall), BUTT JOINT, TOP AND BOTTOM VENT CORNERS ARE SECURED WITH TWO #8 X 3/4" SHEET METAL SCREWS.

		Extrusion Type:	Alloy:	Dimensions:	
2.4.1	TOP RAIL STD.:	HOLLOW	6063-T6	1.000" ext. face, X 1.438" int. face x 0.718" deep	(DWG. #L-7505)
	TOP RAIL HD.:	HOLLOW	6063-T6	1.000" ext. face, X 1.438" int. face x 0.718" deep	(DWG. #L-7509)
2.4.2	BOTTOM RAIL:	HOLLOW	6063-T6	1.000" ext. face, X 1.500" int. face x 0.718" deep	(DWG. #L-7506)
2.4.3	JAMB RAIL:	SOLID	6063-T5	0.322" ext. face, X 1.000" int. face x 0.718" deep	(DWG. #L-7507)

2.5 WEATHERSTRIPPING:

	Quantity:	Description:	Location:
2.5.1	Single Row	.180" w. X .326" hi VINYL BULB	AT VENT BOTTOM RAIL
2.5.2	Single Row	0.187"w. X .350"h. PILE WITH INTEGRAL PLASTIC FIN	AT FRAME SILL
2.5.3	Single Row	0.187"w. X .210"h. PILE WITH INTEGRAL PLASTIC FIN	AT EACH VENT JAMB RAIL
2.5.4	Single Row	0.187"w. X .310"h. PILE WITH INTEGRAL PLASTIC FIN	AT FIXED MEETING RAIL

2.6 HARDWARE:

	Quantity:	Description:	Location:
2.6.1	TWO	SPRING & PULLEY BALANCE - JW Comp.	1 AT EACH FRAME JAMB
2.6.2	TWO	SPRING LOADED ALUMINUM HOOK LOCK	2 AT EA. END OF BOTTOM RAIL
	ONE	SPRING LOADED ALUMINUM HOOK LOCK	1 AT CENTER OF BOTTOM RAIL
2.6.3	FOUR	PLASTIC VENT INTERIOR FACE GUIDE - M&M Plastics	2 PER VENT JAMB RAIL
2.6.4	TWO	STEEL TAKE-OUT BALANCE CLIP - JW Comp.	1 AT EACH FRAME JAMB
2.6.5	TWO	BALANCE GUIDE & CAM - M&M Plastics	1 AT EACH END OF VENT TOP RAIL
2.6.6	TWO	PVC "U" SHAPE VENT STOP - "WIBORG" Vinyl Co.	1 AT TOP OF EACH FRAME JAMB

2.7 WEEPHOLES:

	Quantity:	Description:	Location:
2.7.1	TWO	1" WEEP NOTCH	ONE AT ECH END OF SILL SCREEN RETAINER
2.7.2	TWO	1" X 1/8" WEEPHOLE	AT INTERMEDIATE SILL FLANGE, 3 1/2" C.L. FROM EA. END

2.8 MUNTINS: NONE USED AT TEST (ONLY FALSE, DECORATIVE MUNTINS ARE ALLOWED)

		Extrusion Type:	Alloy:	Dimensions:	
2.8.1	EXTERIOR MUNTIN:	HOLLOW	6063-T6	.428" wide X 1.125" hi x .045" typ. wall	(DWG. #L-7512)
2.8.2	INTERIOR MUNTIN:	SOLID	6063-T5	1.125" hi x .032" typ. wall	(DWG. #L-7513)

2.9 REINFORCEMENT: NONE

2.10 PADS: NONE

2.12 SEALANTS: FRAME CORNERS, FRAME SILL INSTALLATION SCREWS AND FIXED MEETING RAIL AT ENDS WERE SEALED WITH COLORED SEALANT "PURVIS SUPER SEAL"

2.11 ADDITIONAL DESCRIPTION: LAWSON INDUSTRIES IDENTIFICATION LABEL IN FRAME HEAD.

SERIES-7500 FLANGE FRAME WINDOW TEST UNIT PERFORMANCE SUMMARY

BASED ON FTL- 1890
TEST SIZE = 53 1/8" X 74 1/4" - FLANGE (1 OVER 1)
TEST LOADS = +94.5, -94.5 PSF
DESIGN LOADS = +63.0, -63.0 PSF
WATER INFILTRATION TEST = 9.5 PSF
TESTED GLASS = 3/16"-ANNEALED
(REF. DRAWING #LTU-7500) Sheet 2 of 7

BASED ON FTL-1892
TEST SIZE = 53 1/8" X 74 1/4" - FLANGE (1 OVER 1)
TEST LOADS = +67.5, -67.5 PSF
DESIGN LOADS = +45.0, -45.0 PSF
WATER INFILTRATION TEST = 9.4 PSF
TESTED GLASS = 3/16"-ANNEALED
(REF. DRAWING #LTU-7500) Sheet 4 of 7

BASED ON FTL-1893
TEST SIZE = 53" X 63" - FLANGE (1 OVER 1)
TEST LOADS = +76.5, -76.5 PSF (2X WD. BUCK & #10 X 1 1/4" SMS)
TEST LOADS = +62.0, -62.0 PSF (1X WD. BUCK & #10 X 1" SMS)
DESIGN LOADS = +41.3, -41.3 PSF
WATER INFILTRATION TEST = 9.5 PSF
TESTED GLASS = DSB-ANNEALED
(REF. DRAWING #LTU-7500) Sheet 5 of 7

BASED ON FTL-1895
TEST SIZE = 37" X 74 1/4" - FLANGE (1 OVER 1)
TEST LOADS = +95.0, -95.0 PSF (W/ #10 x 1 1/4" SMS.)
TEST LOADS = +77.0, -77.0 PSF (W/ #10 x 1" SMS.)
DESIGN LOADS = +51.3, -51.3 PSF
WATER INFILTRATION TEST = 9.5 PSF
TESTED GLASS = DSB-ANNEALED
(REF. DRAWING #LTU-7500) Sheet 6 of 7

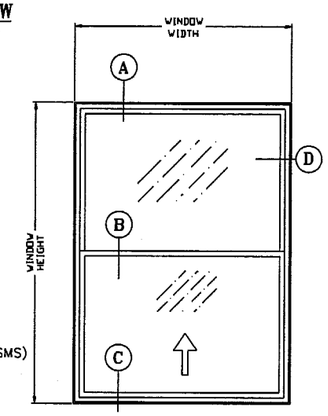

ELEVATION
FLANGE FRAME S.H. WINDOW

SERIES-7500 FIN FRAME WINDOW TEST UNIT PERFORMANCE SUMMARY

BASED ON FTL-1891
TEST SIZE = 54 3/8" X 75 1/2" - FIN (1 OVER 1)
TEST LOADS = +94.5, -94.5 PSF
DESIGN LOADS = +63.0, -63.0 PSF
WATER INFILTRATION TEST = 9.5 PSF
TESTED GLASS = 3/16"-ANNEALED
(REF. DRAWING #LTU-7500) Sheet 3 Of 7

BASED ON FTL-1894
TEST SIZE = 54 3/8" X 64 1/4" - FIN (1 OVER 1)
TEST LOADS = +62.0, -62.0 PSF
DESIGN LOADS = +41.3, -41.3 PSF
WATER INFILTRATION TEST = 9.5 PSF
TESTED GLASS = DSB-ANNEALED
(REF. DRAWING #LTU-7500) Sheet 7 of 7

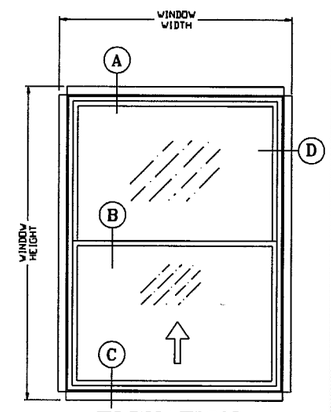

ELEVATION
FIN FRAME S.H. WINDOW

Reference Number : L-7500

BILL OF MATERIALS

ITEM #	PART #	REQD.	DESCRIPTION	REMARKS
1	L-7501	1	FLANGE FRAME HEAD	
2	L-7502	1	FLANGE FRAME SILL	
3	L-7504	2	FLANGE FRAME JAMB	
4	L-7519	1	FIN FRAME HEAD	
5	L-7520	1	FIN FRAME SILL	
6	L-7521	2	FIN FRAME JAMB	
7	L-7503	1	FRAME FIXED RAIL - STD.	
8	L-7505	1	VENT TOP RAIL - STD.	
9	L-7508	1	FRAME FIXED RAIL - H.D.	
10	L-7509	1	VENT TOP RAIL - H.D.	
11	L-7506	1	VENT BOTTOM RAIL	
12	L-7507	1	VENT JAMB RAIL	
13	L-7515	AS REQ'D.	GLAZING BEAD (1/8")	ROLL FORMED ALUMINUM
14	L-7516	AS REQ'D.	GLAZING BEAD (3/16")	ROLL FORMED ALUMINUM
15	FS-006	AS REQ'D.	FRAME ASSEMBLY SCREWS	#8 X 3/4" P.H. PHILLIPS
16	FS-019	AS REQD.	INSTALLATION SCREWS	#10 X 1" PHILLIPS
17	FS-014	AS REQD.	INSTALLATION SCREWS	#10 X 1 1/4" PHILLIPS
18	L-7531	AS REQ'D.	BOTTOM RAIL VINYL WTS'P	1/4" DIA. BULB
19	PWS-003	AS REQ'D.	FIN SEAL WEATHERSTRIP	.187"x.210" (7820-6001-9)
20	PWS-005	AS REQ'D.	FIN SEAL WEATHERSTRIP	.187"x.350" (7834-6001-7)
21	PWS-009	AS REQ'D.	FIN SEAL WEATHERSTRIP	.187"x.310" (7930-6001-9)
22	L-7512	AS REQ'D.	EXTERIOR FALSE MUNTIN	
23	L-7513	AS REQ'D.	INTERIOR FALSE MUNTIN	
24	L-7524	AS REQD.	SASH FACE GUIDE	(2 X VENT JAMB RAIL)
25	L-723	1	SASH TOP GUIDE / CAM	
26	L-7526	2	SASH STOP	
27	L-7527	2	BLOCK & TACKLE BALANCE	
28	L-7522	AS REQ'D.	VENT LATCH	
29	L-7523	AS REQ'D.	VENT LATCH SPRING	
30	GlsCht-1	-	GLASS CHART 1/1	
31	ScrCht-1	-	SCREEN CHART	
32	L-7547	1	PRODUCT LABEL	

Approved as complying with the Florida Buiding Code
Date MARCH 6, 2003
NOA# 02-1203.02
Miami Dade Product Control Division
By Manuel Perez

Commercial tolerances apply unless noted otherwise.

THOMAS J. SOTOS
PROFESSIONAL ENGINEER
FL LIC. # 55225

FEB 12 2003

DATE_____

Revision Notes:
1) Revised tables as per ASTM E1300...11/21/2002
2) Revised tables to include 3/16" tempered glass
3) Revised tables (anchors)

Checked By: Nelson Erazo	Date Checked: 02/12/2003
Drawn By: Larry Magee	Date Drawn: 11/21/2002
	Scale: AS NOTED

LAWSON INDUSTRIES, INC.
MANUFACTURER OF QUALITY ALUMINUM WINDOWS AND GLASS DOORS

8501 NW 90th St.
MEDLEY, FLORIDA 33166
(305) 696-8660

Draw Class:	Part Class:	Prod Category:	Series/Model:	Item:	Sheet:
LAYOUT		S.H.	7500	TEST	1 of 7

SERIES-7500 SINGLE HUNG - FLANGE/FIN FRAME WINDOW - TEST UNIT ASSEMBLY LAYOUT & DETAILS, BILL OF MATERIALS, ELEVATION, INSTALLATION DETAILS, GENERAL NOTES & TEST UNIT PERFORMANCE

Part Number:	Drawing Number:	Revision Level:
	LTU-7500	D-2002

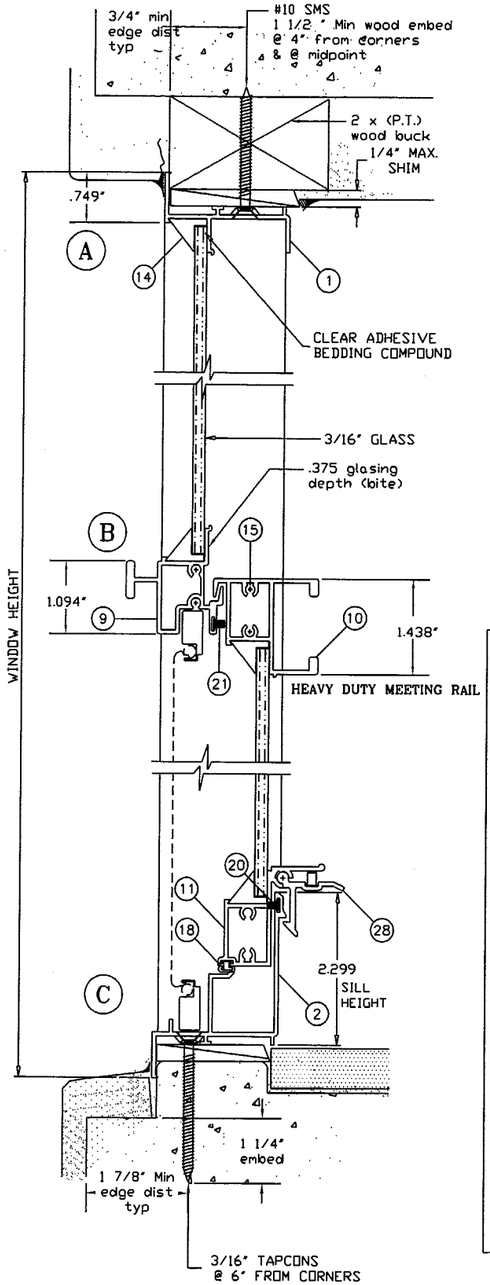

Header and Sill Section

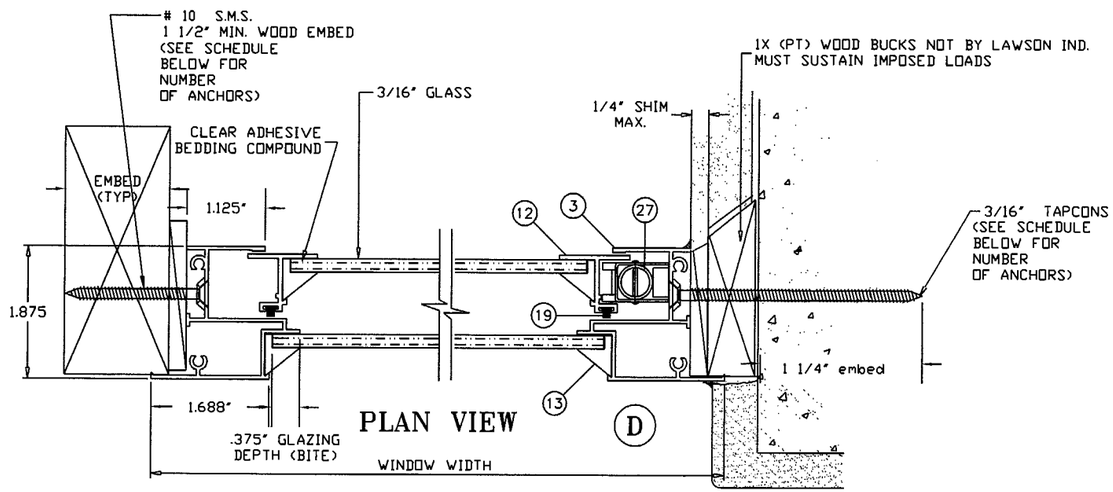

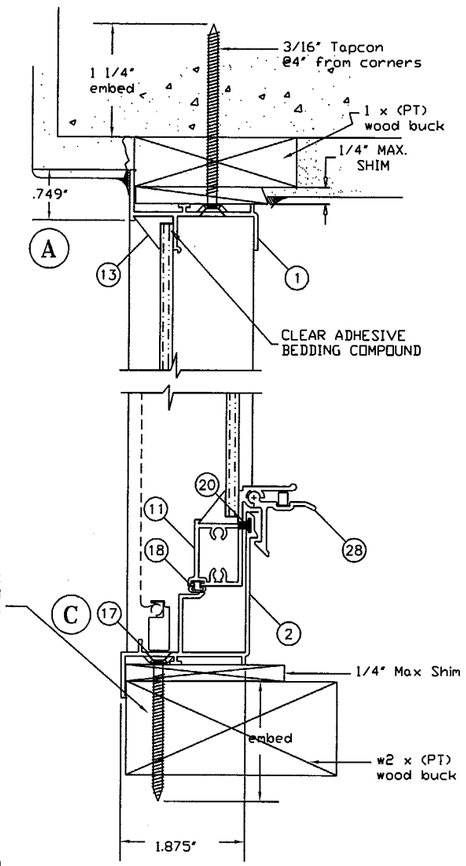

Alt. Header & Sill Section

FLANGE FRAME WINDOW COMPARATIVE ANALYSIS CHART							
HEAVY DUTY MEETING RAIL		3/16" ANNEALED GLASS			3/16" TEMPERED GLASS		
WIDTH (INCHES)	HEIGHT (INCHES)	QTY OF ANCHORS *	DESIGN LOAD CAPACITY - (PSF) POSITIVE	DESIGN LOAD CAPACITY - (PSF) NEGATIVE	QTY OF ANCHORS *	DESIGN LOAD CAPACITY - (PSF) POSITIVE	DESIGN LOAD CAPACITY - (PSF) NEGATIVE
19 1/8	26	[3]	63.3	210.0	[3]	63.3	220.7
26 1/2	26	[3]	63.3	210.0	[3]	63.3	159.3
37	26	[3]	63.3	203.9	[3]	63.3	114.1
53 1/8	26	[3]	63.3	133.4	[3]	63.3	79.4
19 1/8	38 3/8	[3]	63.3	210.0	[3]	63.3	249.2
26 1/2	38 3/8	[3]	63.3	189.0	[3]	63.3	179.8
37	38 3/8	[3]	63.3	135.0	[3]	63.3	128.8
53 1/8	38 3/8	[3]	63.3	96.8	[3]	63.3	89.7
19 1/8	50 5/8	[4]	63.3	205.0	[4]	63.3	188.9
26 1/2	50 5/8	[4]	63.3	133.0	[4]	63.3	136.3
37	50 5/8	[4]	63.3	89.9	[4]	63.3	97.6
53 1/8	50 5/8	[4]	62.1	62.1	[4]	63.3	68
19 1/8	56	[4]	63.3	187.0	[4]	63.3	204.9
26 1/2	56	[4]	63.3	120.0	[4]	63.3	147.9
37	56	[4]	63.3	81.9	[4]	63.3	105.9
53 1/8	56	[4]	52.9	52.9	[4]	63.3	73.8
19 1/8	63	[5]	63.3	167.0	[5]	63.3	212.5
26 1/2	63	[5]	63.3	104.0	[5]	63.3	153.4
37	63	[5]	63.3	75.0	[5]	63.3	105.7
53 1/8	63	[5]	48.9	48.9	[5]	63.3	68.7
19 1/8	74 1/4	[5]	63.3	145.0	[5]	63.3	180.3
26 1/2	74 1/4	[5]	63.3	86.0	[5]	63.3	130.1
37	74 1/4	[5]	63.3	64.8	[5]	63.3	88.8
53 1/8	74 1/4	[5]	45.0	45.0	[5]	59.6	59.6
No. in parenthesis indicates No. of anchors per jamb							Page 2

Notes: * Anchors to be either:
3/16" Tapcons with 1 1/4" min. embedment in masonry or #10 SMS with 1 1/2" min. embedment in wood.

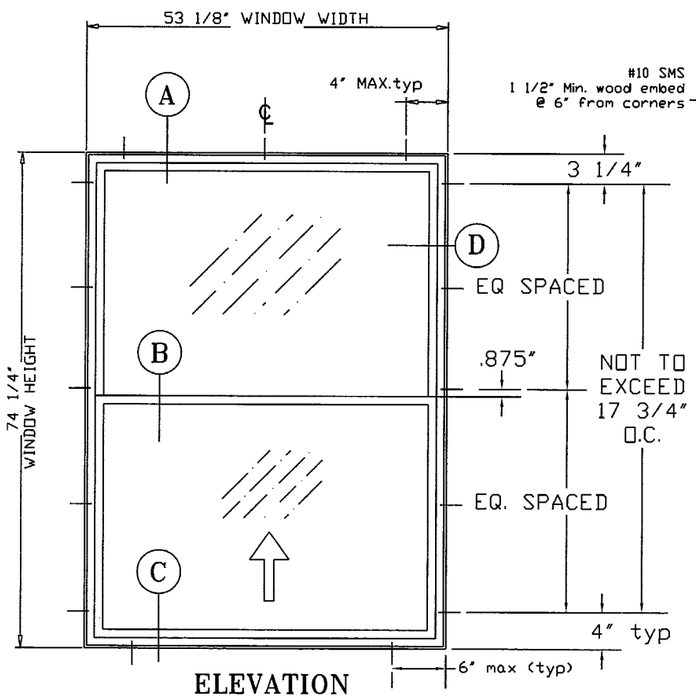

ELEVATION
FLANGE FRAME S.H. WINDOW

3/16" ANNEALED GLASS
FLANGE FRAME
1X OR 2X WOOD BUCK
HEAVY DUTY RAIL
TEST UNIT PREFORMANCE

REFERENCE	FTL-1890 12-8-97
TEST SIZE	53-1/8" X 74-1/4"
TEST LOADS	+94.5. -94.5 PSF
DESIGN LOADS	+63.0. -63.0 PSF
WATER INFILTRATION TEST	9.5 PSF
TESTED GLASS	3/16" ANNEALED
MAX JAMB SCREW SPACING	15 3/4" & 17 3/4"

NON-IMPACT RESISTANT

NOTES:
1. This window system is designed and tested to comply with the requirements of the 2001 Florida Building code and ASTM 1300-94.
2. 1 x or 2 x wood bucks shall be installed (not by Lawson Ind) and anchored so that the building resists the superimposed loads in accordance with requirements of 2001 F.B.C.
3. Anchor described in this layout are as per test unit. other conditions to be engineered separately
4. Anchor conditions not described in this drawing are to be engineered on a site specific basis.

Approved as complying with the Florida Buiding Code
Date MARCH 6, 2003
NOA# 02-1203.02
Miami Dade Product Control Division
By Manuel Perez

THOMAS J. SOTOS
PROFESSIONAL ENGINEER
FL LIC. # 55225

DATE FEB 12 2003

Commercial tolerances apply unless noted otherwise.

Revision Notes:
1) Revised tables as per ASTM E1300...11/21/2002
2) Revised tables to include 3/16" tempered glass
3) Revised tables (anchors)

Checked By:	Nelson Erazo	Date Checked:	02/12/2003
Drawn By:	Larry Magee	Date Drawn:	11/21/2002
		Scale:	AS NOTED

LAWSON INDUSTRIES, INC.
MANUFACTURER OF QUALITY ALUMINUM WINDOWS AND GLASS DOORS

8501 NW 90th St.
MEDLEY, FLORIDA 33166
(305) 696-8660

Draw Class:	Part Class:	Prod Category:	Series/Model:	Item:	Sheet:
LAYOUT		S.H.	7500	TEST	2 of 7

SERIES-7500 SINGLE HUNG - FLANGE FRAME WINDOW - TEST UNIT ASSEMBLY LAYOUT & DETAILS, BILL OF MATERIALS, ELEVATION, INSTALLATION DETAILS, GENERAL NOTES & TEST UNIT PERFORMANCE

Part Number: | Drawing Number: LTU-7500 | Revision Level: D-2002

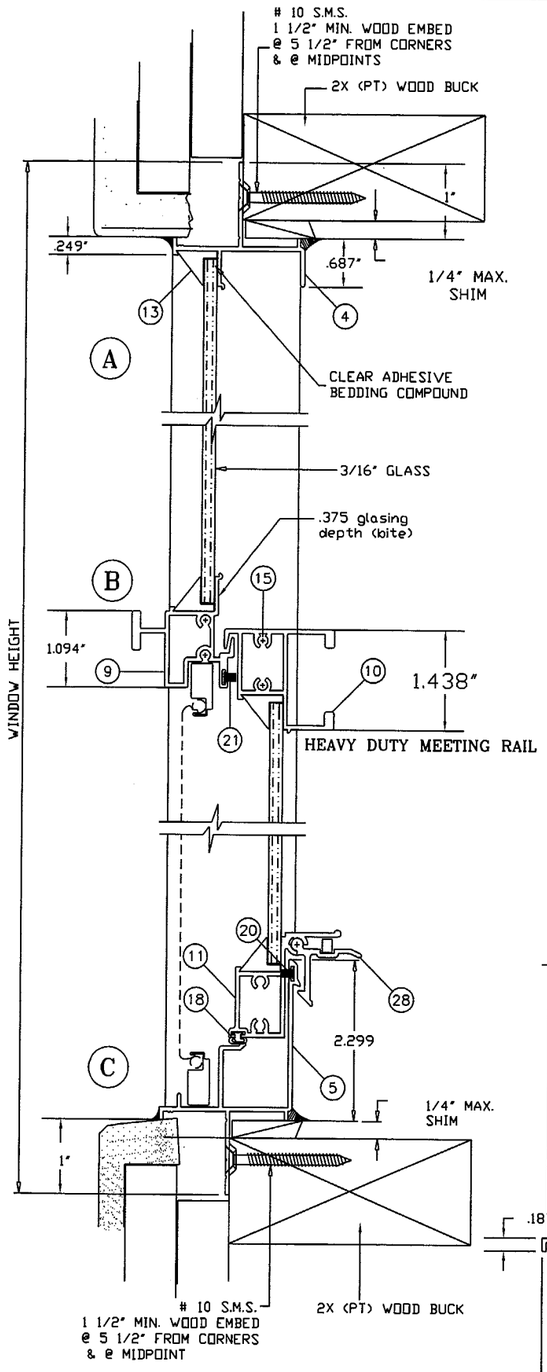

Header and Sill Section

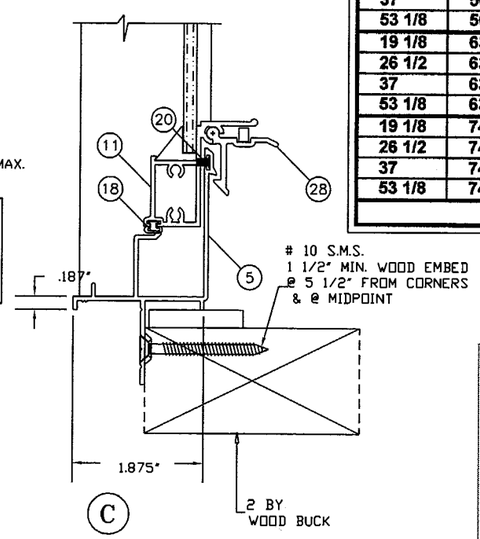

Alt. Sill Section

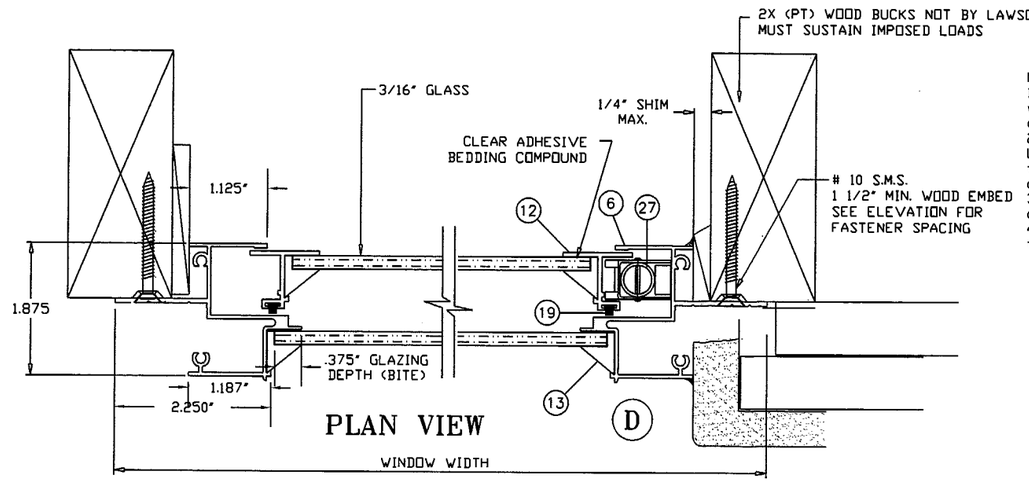

PLAN VIEW

NOTES:
1. This window system is designed and tested to comply with the requirements of the 2001 Florida Building code and ASTM 1300-94.
2. 1 x or 2 x wood bucks shall be installed (not by Lawson Ind) and anchored so that the building resists the superimposed loads in accordance with requirements of 2001 F.B.C.
3. Anchor described in this layout are as per test unit. other conditions to be engineered separately
4. Anchor conditions not described in this drawing are to be engineered on a site specific basis.

3/16" ANNEALED GLASS	
FIN FRAME	
2X WOOD BUCK	
HEAVY DUTY RAIL	
TEST UNIT	
PREFORMANCE SUMMARY	
REFERENCE	FTL-1891 12-11-97
TEST SIZE	54-1/8" X 75-1/2"
TEST LOADS	+94.5. -94.5 PSF
DESIGN LOADS	+63.0. -63.0 PSF
WATER INFILTRATION TEST	9.5 PSF
TESTED GLASS	3/16" ANNEALED
MAX JAMB SCREW SPACING	15 3/4" & 18 3/4"
NON-IMPACT RESISTANT	

Approved as complying with the Florida Buiding Code
Date MARCH 6, 2003
NOA# 02-1203.02
Miami Dade Product Control Division
By Manuel Perez

FIN FRAME WINDOW COMPARATIVE ANALYSIS CHART

HEAVY DUTY MEETING RAIL		3/16" ANNEALED GLASS			3/16" TEMPERED GLASS		
			DESIGN LOAD CAPACITY - (PSF)			DESIGN LOAD CAPACITY - (PSF)	
WIDTH (INCHES)	HEIGHT (INCHES)	QTY OF ANCHORS *	POSITIVE	NEGATIVE	QTY OF ANCHORS *	POSITIVE	NEGATIVE
19 1/8	26	[5]	63.3	210.0	[7]	63.3	510.8
26 1/2	26	[5]	63.3	210.0	[7]	63.3	322.4
37	26	[5]	63.3	210.0	[5]	63.3	211.4
53 1/8	26	[5]	63.3	138.3	[5]	63.3	138.3
19 1/8	38 3/8	[5]	63.3	210.0	[9]	63.3	428.7
26 1/2	38 3/8	[5]	63.3	198.0	[7]	63.3	258.4
37	38 3/8	[5]	63.3	138.0	[7]	63.3	159.4
53 1/8	38 3/8	[5]	63.3	100.4	[5]	63.3	100.4
19 1/8	50 5/8	[5]	63.3	210.0	[9]	63.3	316.1
26 1/2	50 5/8	[5]	63.3	139.0	[9]	63.3	208
37	50 5/8	[5]	63.3	93.1	[7]	63.3	136
53 1/8	50 5/8	[5]	63.3	63.3	[7]	63.3	81.8
19 1/8	56	[5]	63.3	205.0	[9]	63.3	283.4
26 1/2	56	[5]	63.3	125.0	[9]	63.3	186.4
37	56	[5]	63.3	84.6	[7]	63.3	125.2
53 1/8	56	[5]	54.7	54.7	[7]	63.3	76.5
19 1/8	63	[5]	63.3	188.0	[9]	63.3	249.7
26 1/2	63	[5]	63.3	108.0	[9]	63.3	164.2
37	63	[5]	63.3	77.2	[7]	63.3	110.3
53 1/8	63	[5]	50.0	50.0	[7]	63.3	71.2
19 1/8	74 1/4	{7}	63.3	168.0	[9]	63.3	209.6
26 1/2	74 1/4	{7}	63.3	90.3	[9]	63.3	137.7
37	74 1/4	{7}	63.3	66.6	[7]	63.3	92.5
53 1/8	74 1/4	{7}	46.1	46.1	[7]	61.4	61.4

No. in parenthesis indicates No. of anchors per jamb — Page 3

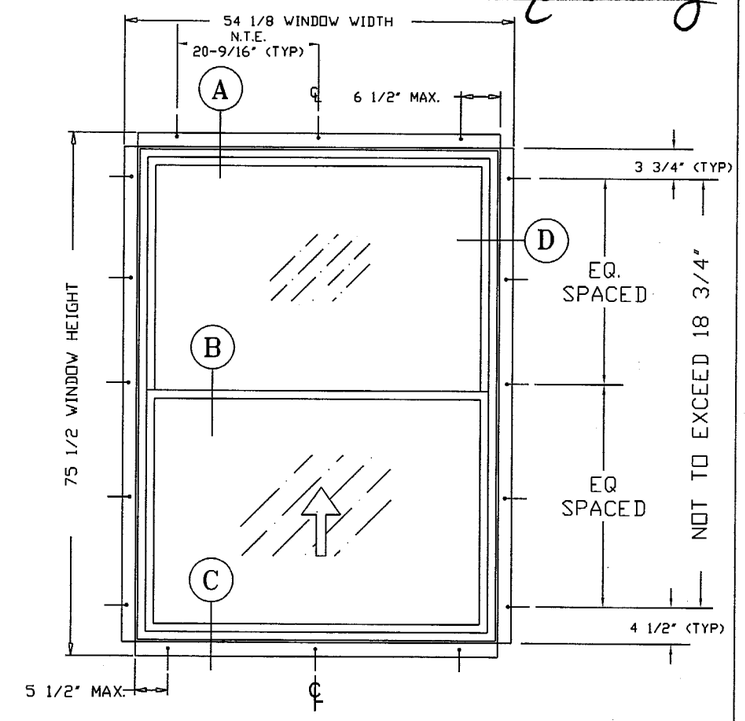

ELEVATION
FIN FRAME S.H. WINDOW

Commercial tolerances apply unless noted otherwise.

THOMAS J. SOTOS
PROFESSIONAL ENGINEER
FL LIC. # 55225

DATE FEB 12 2003

Revision Notes:
1) Revised tables as per ASTM E1300...11/21/2002
2) Revised tables to include 3/16" tempered glass
3) Revised tables (anchors)

Checked By:	Nelson Erazo	Date Checked:	02/12/2003
Drawn By:	Larry Magee	Date Drawn:	11/21/2002
		Scale:	AS NOTED

LAWSON INDUSTRIES, INC.
8501 NW 90th St.
MEDLEY, FLORIDA 33166
(305) 696-8660
MANUFACTURER OF QUALITY ALUMINUM WINDOWS AND GLASS DOORS

Draw Class:	Part Class:	Prod Category:	Series/Model:	Item:	Sheet:
LAYOUT		S.H.	7500	TEST	3 of 7

SERIES-7500 SINGLE HUNG - FIN FRAME WINDOW - TEST UNIT
ASSEMBLY LAYOUT & DETAILS, BILL OF MATERIALS, ELEVATION, INSTALLATION DETAILS, GENERAL NOTES & TEST UNIT PERFORMANCE

Part Number:	Drawing Number:	Revision Level:
	LTU-7500	D-2002

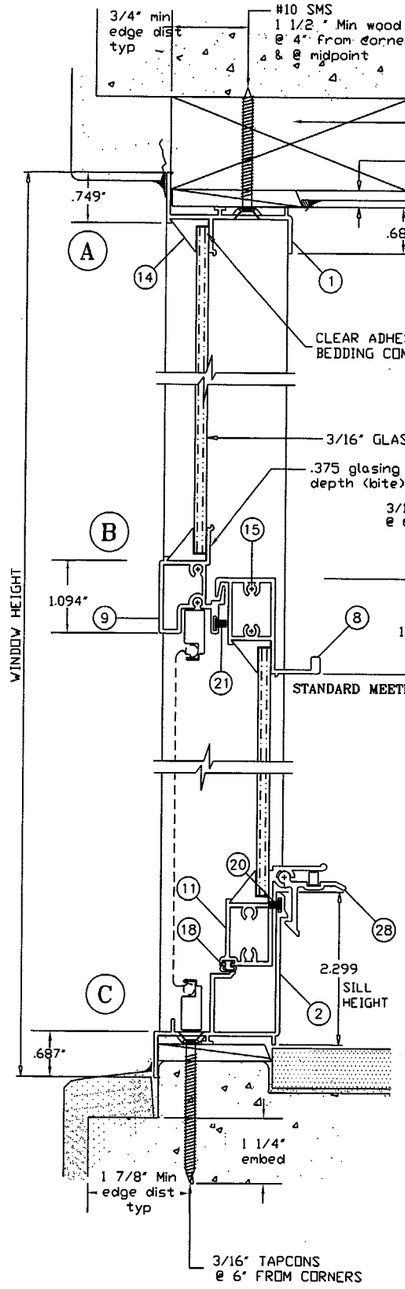

Header and Sill Section

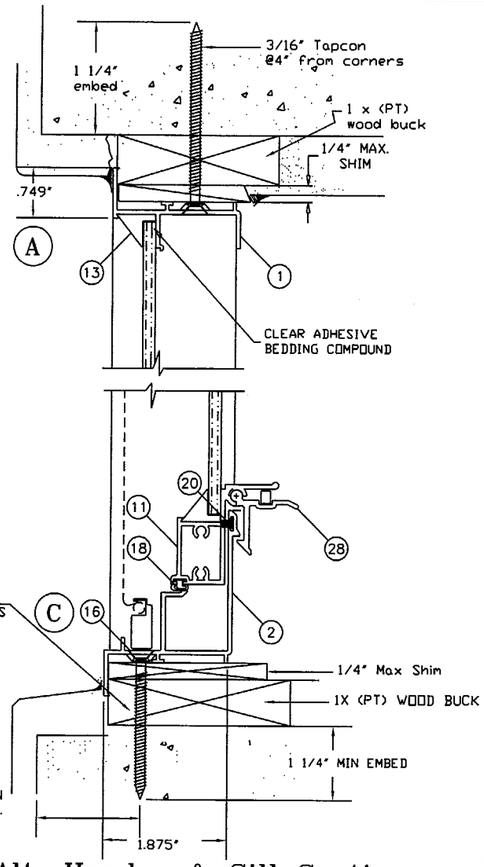

Alt. Header & Sill Section

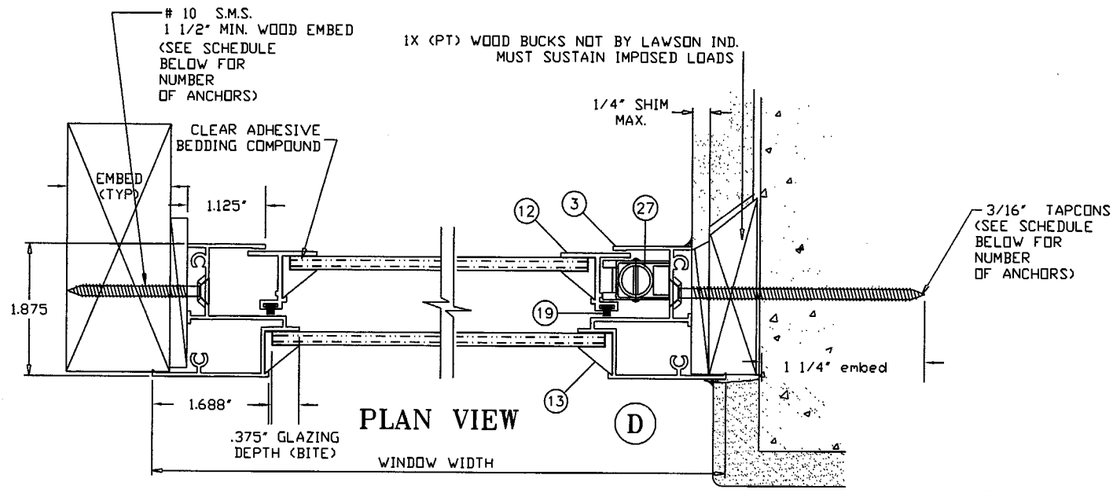

Approved as complying with the Florida Buiding Code
Date MARCH 6 2003
NOA# 02-1203.02
Miami Dade Product Control Division
By Manuel Perez

FLANGE FRAME WINDOW COMPARATIVE ANALYSIS CHART							
STANDARD DUTY MEETING RAIL		3/16" ANNEALED GLASS			3/16" TEMPERED GLASS		
WIDTH	HEIGHT	QTY OF	DESIGN LOAD CAPACITY - (PSF)		QTY OF	DESIGN LOAD CAPACITY - (PSF)	
(INCHES)	(INCHES)	ANCHORS *	POSITIVE	NEGATIVE	ANCHORS *	POSITIVE	NEGATIVE
19 1/8	26	[3]	63.3	210.0	[3]	63.3	204.6
26 1/2	26	[3]	63.3	210.0	[3]	63.3	147.7
37	26	[3]	63.3	145.6	[3]	63.3	105.8
53 1/8	26	[3]	63.3	95.3	[3]	63.3	73.7
19 1/8	38 3/8	[3]	63.3	210.0	[3]	63.3	231.1
26 1/2	38 3/8	[3]	63.3	178.0	[3]	63.3	166.8
37	38 3/8	[3]	63.3	109.8	[3]	63.3	109.8
53 1/8	38 3/8	[3]	63.3	69.1	[3]	63.3	69.1
19 1/8	50 5/8	[4]	63.3	205.0	[4]	63.3	175.2
26 1/2	50 5/8	[4]	63.3	133.0	[4]	63.3	126.4
37	50 5/8	[4]	63.3	89.9	[4]	63.3	90.5
53 1/8	50 5/8	[4]	56.4	56.4	[4]	56.4	56.4
19 1/8	56	[4]	63.3	187.0	[4]	63.3	190
26 1/2	56	[4]	63.3	120.0	[4]	63.3	137.1
37	56	[4]	63.3	81.9	[4]	63.3	89.7
53 1/8	56	[4]	52.7	52.7	[4]	52.7	52.7
19 1/8	63	[5]	63.3	167.0	[5]	63.3	197.1
26 1/2	63	[5]	63.3	104.0	[5]	63.3	142.2
37	63	[5]	63.3	75.0	[5]	63.3	86.3
53 1/8	63	[5]	48.9	48.9	[5]	49	49
19 1/8	74 1/4	[5]	63.3	145.0	[5]	63.3	167.2
26 1/2	74 1/4	[5]	63.3	86.0	[5]	63.3	120.7
37	74 1/4	[5]	63.3	64.8	[5]	63.3	84.4
53 1/8	74 1/4	[5]	45.0	45.0	[5]	-	-
No. in parenthesis indicates No. of anchors per jamb							Page 4

Notes: * Anchors to be either:
3/16" Tapcons with 1 1/4" min. embedment in masonry or#10 SMS with 1 1/2" min. embedment in wood.

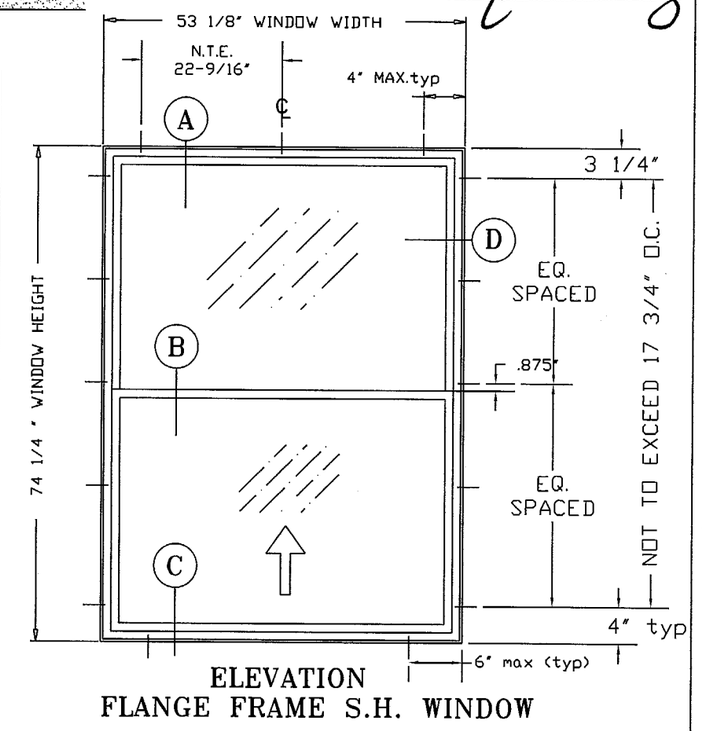

ELEVATION
FLANGE FRAME S.H. WINDOW

3/16" ANNEALED GLASS
FLANG FRAME
1X OR 2X WOOD BUCK
STANDARD RAIL
TEST UNIT
PREFORMANCE SUMMARY
REFERENCE FTL-1892 12-8-97
TEST SIZE 53 1/8" X 74-1/4"
TEST LOADS +67.5 -67.5 PSF
DESIGN LOADS +45.0 -45.0 PSF
WATER INFILTRATION TEST 9.5 PSF
TESTED GLASS 3/16" ANNEALED
MAX JAMB SCREW SPACING 15 3/4" & 17 3/4"
NON-IMPACT RESISTANT

NOTES:
1. This window system is designed and tested to comply with the requirements of the 2001 Florida Building code and ASTM 1300-94.
2. 1 x or 2 x wood bucks shall be installed (not by Lawson Ind) and anchored so that the building resists the superimposed loads in accordance with requirements of 2001 F.B.C.
3. Anchor described in this layout are as per test unit. other conditions to be engineered separately
4. Anchor conditions not described in this drawing are to be engineered on a site specific basis.

THOMAS J. SOTOS
PROFESSIONAL ENGINEER
FL LIC. # 55225

DATE FEB 12 2003

Commercial tolerances apply unless noted otherwise.

Revision Notes:
1) Revised tables as per ASTM E1300...11/21/2002
2) Revised tables to include 3/16" tempered glass
3) Revised tables (anchors)

Checked By: Nelson Erazo	Date Checked: 02/12/2003
Drawn By: Larry Magee	Date Drawn: 11/21/2002
	Scale: AS NOTED

LAWSON INDUSTRIES, INC.
8501 NW 90th St.
MEDLEY, FLORIDA 33166
(305) 696-8660
MANUFACTURER OF QUALITY ALUMINUM WINDOWS AND GLASS DOORS

Draw Class:	Part Class:	Prod Category:	Series/Model:	Item:	Sheet:
LAYOUT		S.H.	7500	TEST	4 of 7

SERIES-7500 SINGLE HUNG - FLANGE FRAME WINDOW - TEST UNIT
ASSEMBLY LAYOUT & DETAILS, BILL OF MATERIALS, ELEVATION, INSTALLATION DETAILS, GENERAL NOTES & TEST UNIT PERFORMANCE

Part Number:	Drawing Number:	Revision Level:
	LTU-7500	D-2002

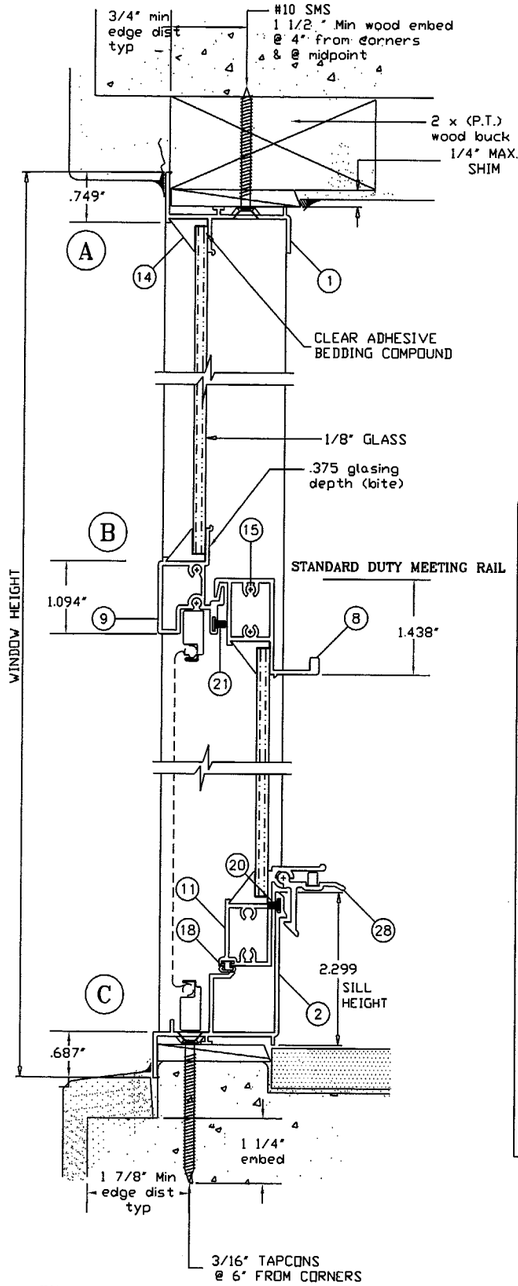

Header and Sill Section

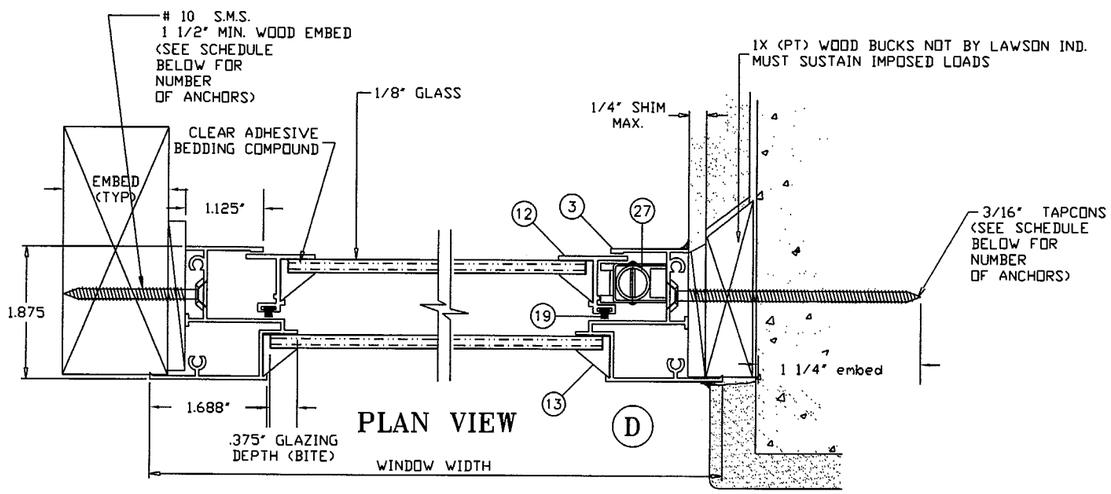

PLAN VIEW

FLANGE FRAME WINDOW COMPARATIVE ANALYSIS CHART							
STANDARD DUTY MEETING RAIL		DSB-3mm ANNEALED GLASS			DSB-3mm TEMPERED GLASS		
			DESIGN LOAD CAPACITY - (PSF)			DESIGN LOAD CAPACITY - (PSF)	
WIDTH (INCHES)	HEIGHT (INCHES)	QTY OF ANCHORS *	POSITIVE	NEGATIVE	QTY OF ANCHORS *	POSITIVE	NEGATIVE
19 1/8	26	[3]	63.3	210.0	[3]	63.3	219.1
26 1/2	26	[3]	63.3	158.0	[3]	63.3	158.1
37	26	[3]	63.3	122.7	[3]	63.3	113.2
53 1/8	26	[3]	63.3	80.3	[3]	63.3	78.9
19 1/8	38 3/8	[3]	63.3	134.0	[3]	63.3	212.4
26 1/2	38 3/8	[3]	63.3	90.1	[3]	63.3	144.3
37	38 3/8	[3]	59.7	59.7	[3]	63.3	92.5
53 1/8	38 3/8	[3]	44.6	44.6	[3]	58.3	58.3
19 1/8	50 5/8	[4]	63.3	95.9	[4]	63.3	157.8
26 1/2	50 5/8	[4]	63.3	75.2	[4]	63.3	107
37	50 5/8	[4]	51.1	51.1	[4]	63.3	73.5
53 1/8	50 5/8	[4]	30.8	30.8	[4]	47.5	47.5
19 1/8	56	[4]	63.3	84.1	[4]	63.3	141.8
26 1/2	56	[4]	63.3	67.8	[4]	63.3	96.2
37	56	[4]	49.3	49.3	[4]	63.3	66
53 1/8	56	[4]	30.6	30.6	[4]	44.4	44.4
19 1/8	63	[5]	63.3	74.4	[5]	63.3	125.3
26 1/2	63	[5]	60.0	60.0	[5]	63.3	84.9
37	63	[5]	46.1	46.1	[5]	58.3	58.3
53 1/8	63	[5]	30.4	30.4	[5]	39.4	39.4
No. in parenthesis indicates No. of anchors per jamb							Page 5

Notes: * Anchors to be either:
3/16" Tapcons with 1 1/4" min. embedment in masonry OR #10 SMS with 1 1/2" min. embedment in wood.

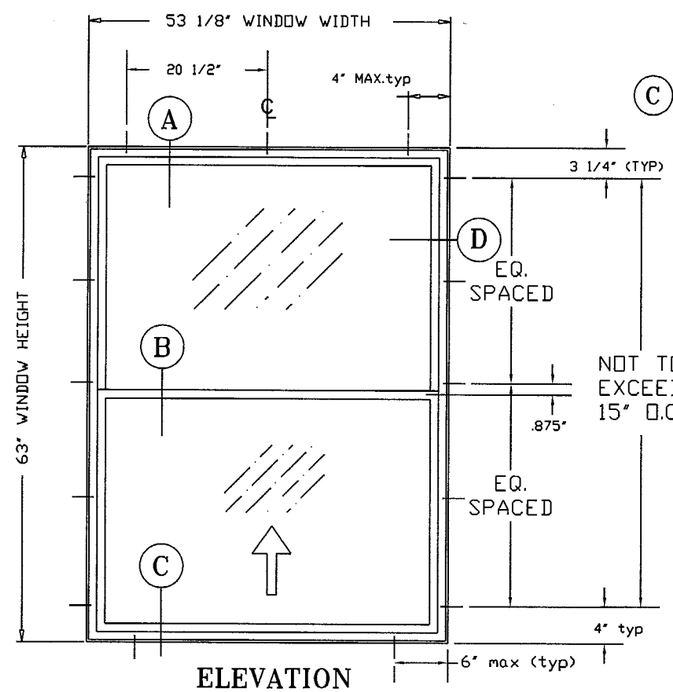

ELEVATION
FLANGE FRAME S.H. WINDOW

Commercial tolerances apply unless noted otherwise.

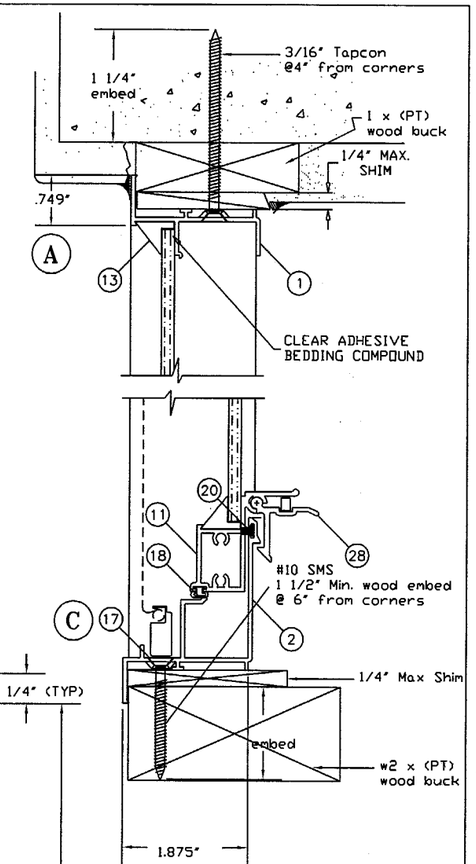

Alt. Header & Sill Section

Approved as complying with the Florida Buiding Code
Date MARCH 6, 2003
NOA# 02-1203.02
Miami Dade Product Control Division
By Manuel Perez

NOTES:
1. This window system is designed and tested to comply with the requirements of the 2001 Florida Building code and ASTM 1300-94.
2. 1 x or 2 x wood bucks shall be installed (not by Lawson Ind) and anchored so that the building resists the superimposed loads in accordance with requirements of 2001 F.B.C.
3. Anchor described in this layout are as per test unit. other conditions to be engineered separately
4. Anchor conditions not described in this drawing are to be engineered on a site specific basis.

DSB -3mm-ANNEALED GLASS
FLANGE FRAME
1X OR 2X WOOD BUCK
STANDARD RAIL
TEST UNIT
PREFORMANCE SUMMARY

REFERENCE	FTL-1893 12-11-97
TEST SIZE	53-1/8" X 63"
TEST LOADS	+62.0 -62.0 PSF
DESIGN LOADS	+41.33. -41.33 PSF
WATER INFILTRATION TEST	9.5 PSF
TESTED GLASS	DSB-3mm ANNEALED
MAX JAMB SCREW SPACING	15" & 13"
NON-IMPACT RESISTANT	

THOMAS J. SOTOS
PROFESSIONAL ENGINEER
FL LIC. # 55225

DATE FEB 12 2003

Revision Notes:
1) Revised tables as per ASTM E1300...11/21/2002
2) Revised tables to include 3/16" tempered glass
3) Revised tables (anchors)

Checked By:	Nelson Erazo	Date Checked:	02/12/2003
Drawn By:	Larry Magee	Date Drawn:	11/21/2002
		Scale:	AS NOTED

LAWSON INDUSTRIES, INC.
8501 NW 90th St.
MEDLEY, FLORIDA 33166
(305) 696-8660
MANUFACTURER OF QUALITY ALUMINUM WINDOWS AND GLASS DOORS

Draw Class:	Part Class:	Prod Category:	Series/Model:	Item:	Sheet:
LAYOUT		S.H.	7500	TEST	5 of 7

SERIES-7500 SINGLE HUNG - FLANGE FRAME WINDOW - TEST UNIT ASSEMBLY LAYOUT & DETAILS, BILL OF MATERIALS, ELEVATION, INSTALLATION DETAILS, GENERAL NOTES & TEST UNIT PERFORMANCE

Part Number:	Drawing Number:	Revision Level:
	LTU-7500	D-2002

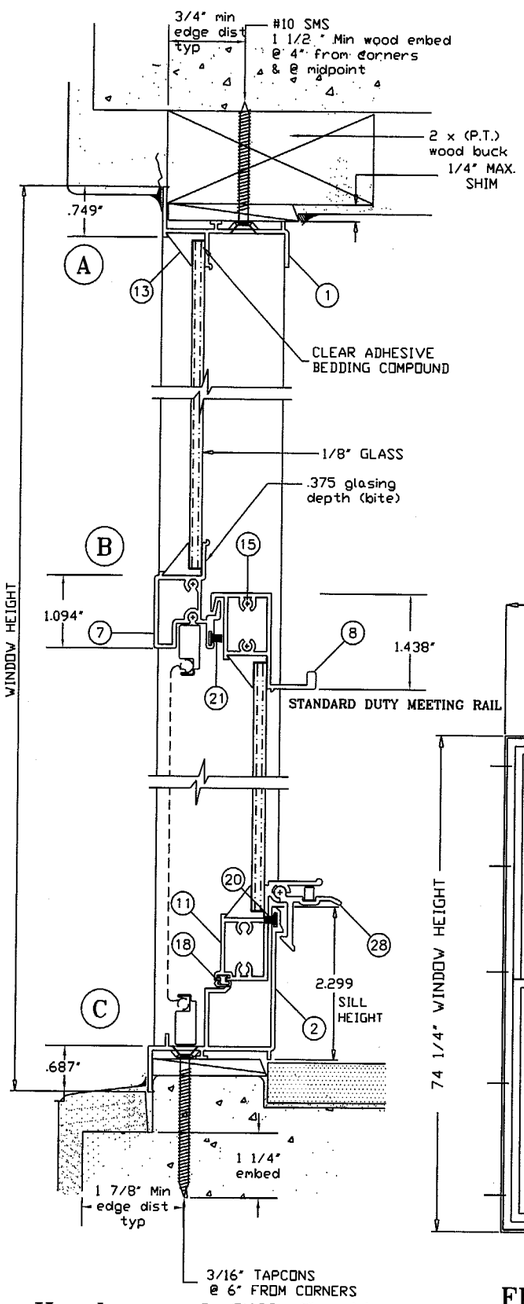

Header and Sill Section

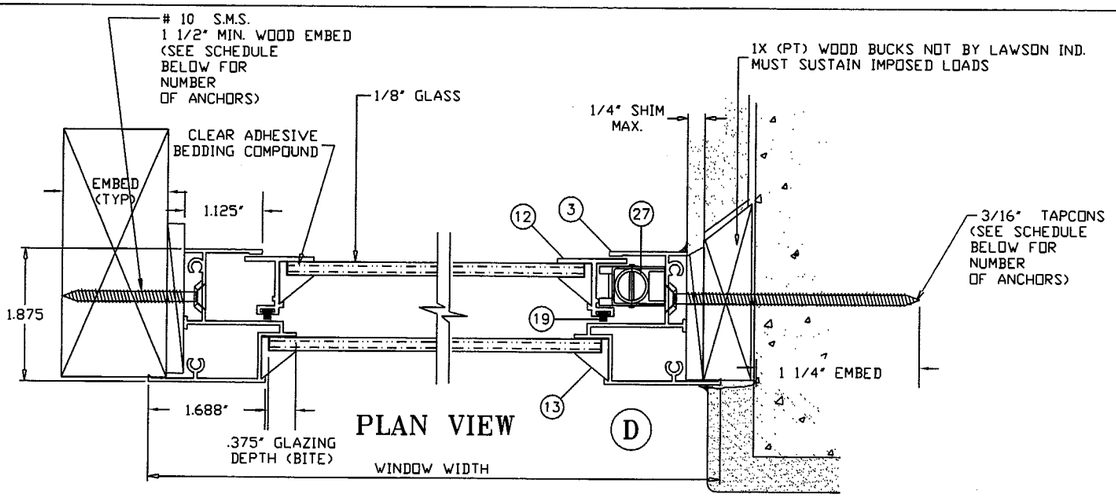

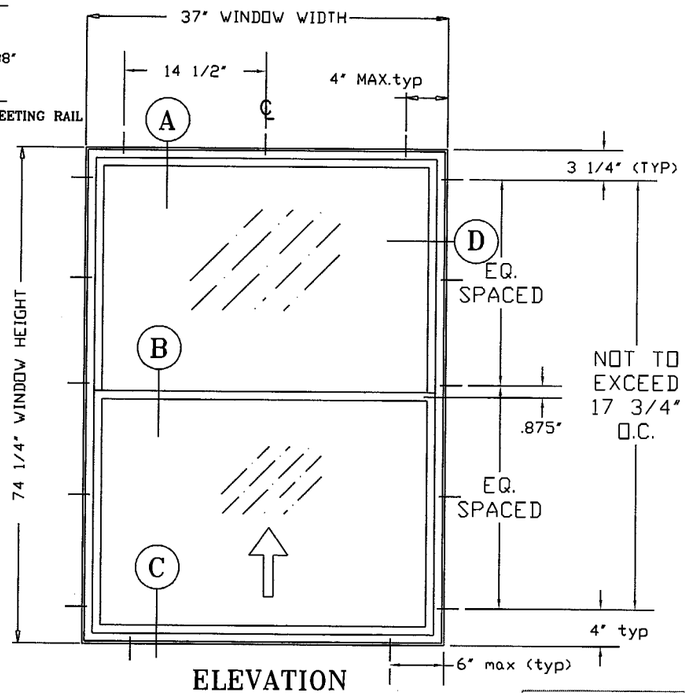

ELEVATION FLANGE FRAME S.H. WINDOW

FLANGE FRAME WINDOW COMPARATIVE ANALYSIS CHART							
STANDARD DUTY MEETING RAIL		DSB-3mm ANNEALED GLASS			DSB-3mm TEMPERED GLASS		
			DESIGN LOAD CAPACITY - (PSF)			DESIGN LOAD CAPACITY - (PSF)	
WIDTH (INCHES)	HEIGHT (INCHES)	QTY OF ANCHORS *	POSITIVE	NEGATIVE	QTY OF ANCHORS *	POSITIVE	NEGATIVE
19 1/8	26	[3]	63.3	210.0	[3]	63.3	214.1
26 1/2	26	[3]	63.3	135.1	[3]	63.3	135.1
37	26	[3]	63.3	88.6	[3]	63.3	88.6
53 1/8	26	[3]	32.4	32.4	-	-	-
19 1/8	38 3/8	[3]	63.3	134.0	[3]	63.3	192.1
26 1/2	38 3/8	[3]	63.3	90.1	[3]	63.3	108.3
37	38 3/8	[3]	59.7	59.7	[3]	63.3	66.8
53 1/8	38 3/8	[3]	22.6	22.6	-	-	-
19 1/8	50 5/8	[4]	63.3	95.9	[4]	63.3	187.5
26 1/2	50 5/8	[4]	63.3	75.2	[4]	63.3	100.3
37	50 5/8	[4]	51.1	51.1	[4]	57	57
53 1/8	50 5/8	[4]	17.8	17.8	-	-	-
19 1/8	56	[4]	63.3	84.1	[4]	63.3	203.4
26 1/2	56	[4]	63.3	67.8	[4]	63.3	100.4
37	56	[4]	49.3	49.3	[4]	54.6	54.6
53 1/8	56	[4]	16.5	16.5	-	-	-
19 1/8	63	[5]	63.3	74.4	[5]	63.3	211
26 1/2	63	[5]	60.0	60.0	[5]	63.3	103.8
37	63	[5]	46.1	46.1	[5]	52.5	52.5
53 1/8	63	[5]	15.1	15.1	-	-	-
19 1/8	74 1/4	[5]	62.1	62.1	[5]	63.3	179
26 1/2	74 1/4	[5]	49.5	49.5	[5]	58.3	119.2
37	74 1/4	[5]	40.5	40.5	[5]	51.3	51.3
53 1/8	74 1/4	[5]	13.6	13.6	-	-	-
No. in parenthesis indicates No. of anchors per jamb							Page 6

Notes: * Anchors to be either:
3/16" Tapcons with 1 1/4" min. embedment in masonry or #10 SMS with 1 1/2" min. embedment in wood.

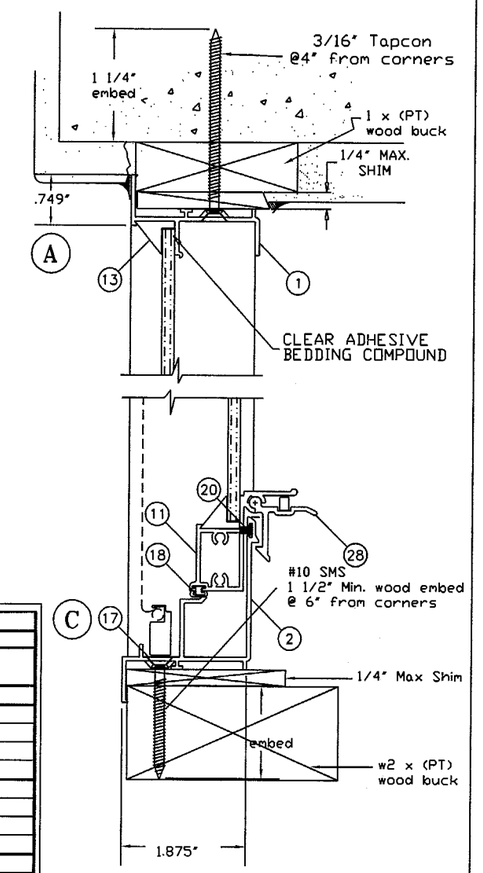

Alt. Header & Sill Section

DSB -3mm-ANNEALED GLASS
FLANGE FRAME
1X OR 2X WOOD BUCK
STANDARD RAIL
TEST UNIT
PREFORMANCE SUMMARY

REFERENCE	FTL-1895 12-11-97
TEST SIZE	37" X 74 1/4"
TEST LOADS	+77.0 -77.0 PSF
DESIGN LOADS	+51.3 -51.3 PSF
WATER INFILTRATION TEST	9.5 PSF
TESTED GLASS	DSB-3mm ANNEALED
MAX JAMB SCREW SPACING	17 3/4" & 15 3/4"

NON-IMPACT RESISTANT

NOTES:
1. This window system is designed and tested to comply with the requirements of the 2001 Florida Building code and ASTM 1300-94..
2. 1 x or 2 x wood bucks shall be installed (not by Lawson Ind) and anchored so that the building resists the superinposed loads in accordance with requirements of 2001 F.B.C.
3. Anchor described in this layout are as per test unit. other conditions to be engineered separately
4. Anchor conditions not described in this drawing are to be engineered on a site specific basis.

Approved as complying with the Florida Buiding Code
Date MARCH 6, 2003
NOA# 02-1203.02
Miami Dade Product Control Division
By Manuel Perez

THOMAS J. SOTOS
PROFESSIONAL ENGINEER
FL LIC. # 55225

DATE FEB 12 2003

Revision Notes:
1) Revised tables as per ASTM E1300...11/21/2002
2) Revised tables to include 3/16" tempered glass
3) Revised tables (anchors)

LAWSON INDUSTRIES, INC.
8501 NW 90th St.
MEDLEY, FLORIDA 33166
(305) 696-8660
MANUFACTURER OF QUALITY ALUMINUM WINDOWS AND GLASS DOORS

Draw Class:	Part Class:	Prod Category:	Series/Model:	Item:	Sheet:
LAYOUT		S.H.	7500	TEST	6 of 7

Checked By: Nelson Erazo	Date Checked: 02/12/2003	SERIES-7500 SINGLE HUNG - FLANGE FRAME WINDOW - TEST UNIT ASSEMBLY LAYOUT & DETAILS, BILL OF MATERIALS, ELEVATION, INSTALLATION DETAILS, GENERAL NOTES & TEST UNIT PERFORMANCE	
Drawn By: Larry Magee	Date Drawn: 11/21/2002		
	Scale: AS NOTED	Part Number:	Drawing Number: LTU-7500 / Revision Level: D-2002

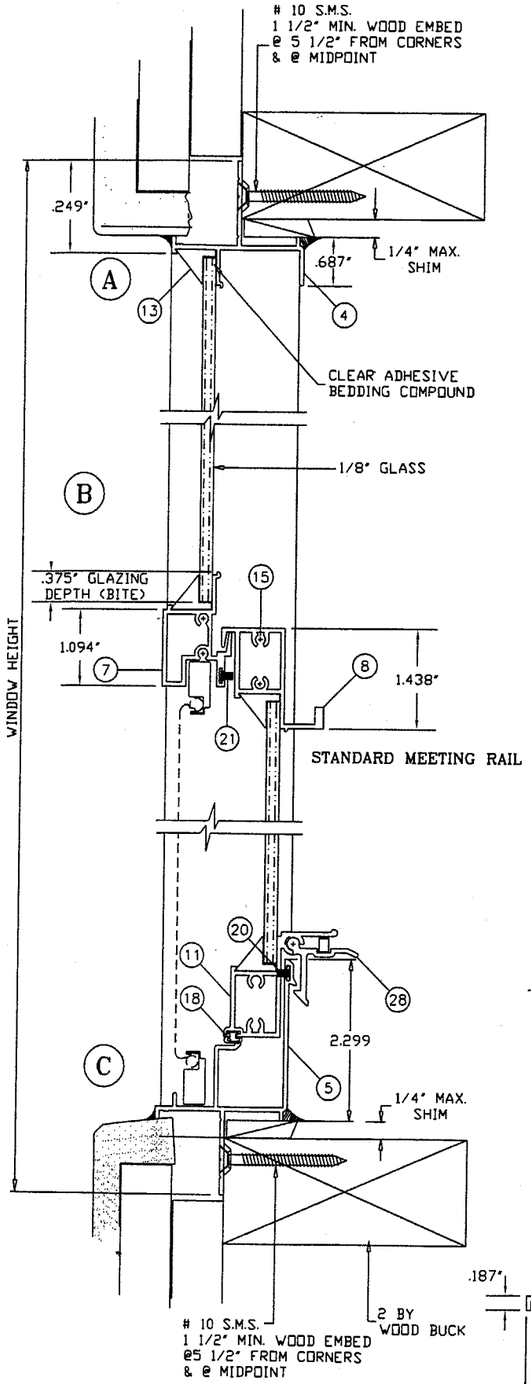

Header and Sill Section

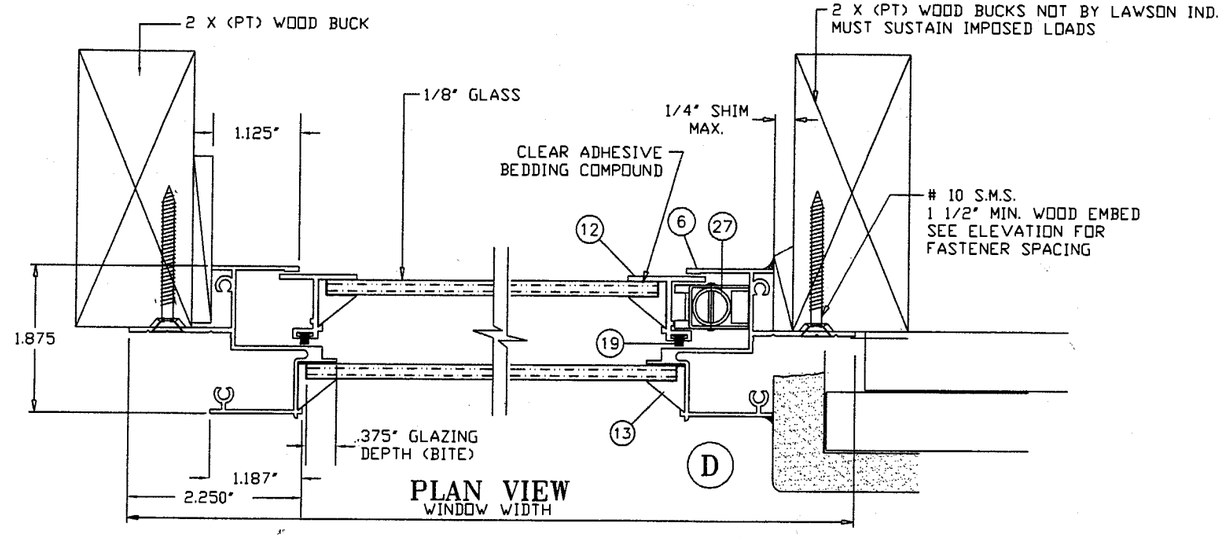

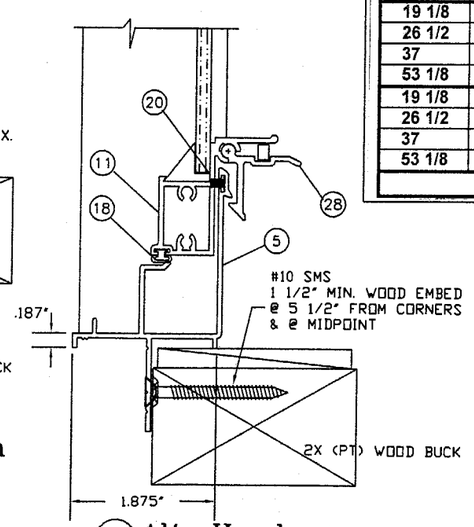

C Alt. Header

FIN FRAME WINDOW COMPARATIVE ANALYSIS CHART							
STANDARD DUTY MEETING RAIL		DSB-3mm ANNEALED GLASS-STD RAIL			DSB-3mm TEMPERED GLASS-STD RAIL		
			DESIGN LOAD CAPACITY - (PSF)			DESIGN LOAD CAPACITY - (PSF)	
WIDTH (INCHES)	HEIGHT (INCHES)	QTY OF ANCHORS *	POSITIVE	NEGATIVE	QTY OF ANCHORS *	POSITIVE	NEGATIVE
19 1/8	26	[3]	63.3	210.0	[5]	63.3	308.3
26 1/2	26	[3]	63.3	164.0	[3]	63.3	194.6
37	26	[3]	63.3	127.6	[3]	63.3	127.6
53 1/8	26	[3]	63.3	83.5	[3]	63.3	83.5
19 1/8	38 3/8	[3]	63.3	141.0	[5]	63.3	231.3
26 1/2	38 3/8	[3]	63.3	95.1	[5]	63.3	153.4
37	38 3/8	[3]	61.5	61.5	[3]	63.3	96.2
53 1/8	38 3/8	[3]	45.1	45.1	[3]	60.6	60.6
19 1/8	50 5/8	[4]	63.3	101.0	[4]	63.3	171.4
26 1/2	50 5/8	[4]	63.3	77.4	[4]	63.3	113.5
37	50 5/8	[4]	52.9	52.9	[4]	63.3	76.7
53 1/8	50 5/8	[4]	31.9	31.9	[4]	49.4	49.4
19 1/8	56	[4]	63.3	90.2	[4]	63.3	153.9
26 1/2	56	[4]	63.3	70.1	[4]	63.3	101.9
37	56	[4]	50.9	50.9	[4]	63.3	68.9
53 1/8	56	[4]	31.4	31.4	[4]	46.0	46.0
19 1/8	63	[5]	63.3	80.1	[5]	63.3	135.9
26 1/2	63	[5]	60.8	60.8	[5]	63.3	89.9
37	63	[5]	47.9	47.9	[5]	60.8	60.8
53 1/8	63	[5]	31.1	31.1	[5]	40.6	40.6
No. in parenthesis indicates No. of anchors per jamb							Page 7

Approved as complying with the Florida Buiding Code
Date MARCH 6, 2003
NOA# 02-1203.02
Miami Dade Product Control Division
By Manuel Perez

DSB -3mm-ANNEALED GLASS	
FIN FRAME	
2X WOOD BUCK	
STANDARD RAIL	
TEST UNIT	
PREFORMANCE SUMMARY	
REFERENCE	FTL-1894 12-11-97
TEST SIZE	54 1/4" X 64"
TEST LOADS	+62.0 -62.0 PSF
DESIGN LOADS	+41.3 -41.3 PSF
WATER INFILTRATION TEST	9.5 PSF
TESTED GLASS	DSB-3mm ANNEALED
MAX JAMB SCREW SPACING	13" & 14 7/8"
NON-IMPACT RESISTANT	

NOTES:
1. This window system is designed and tested to comply with the requirements of the 2001 Florida Building code and ASTM 1300-94.
2. 1 x or 2 x wood bucks shall be installed (not by Lawson Ind) and anchored so that the building resists the superimposed loads in accordance with requirements of 2001 F.B.C.
3. Anchor described in this layout are as per test unit. other conditions to be engineered separately
4. Anchor conditions not described in this drawing are to be engineered on a site specific basis.

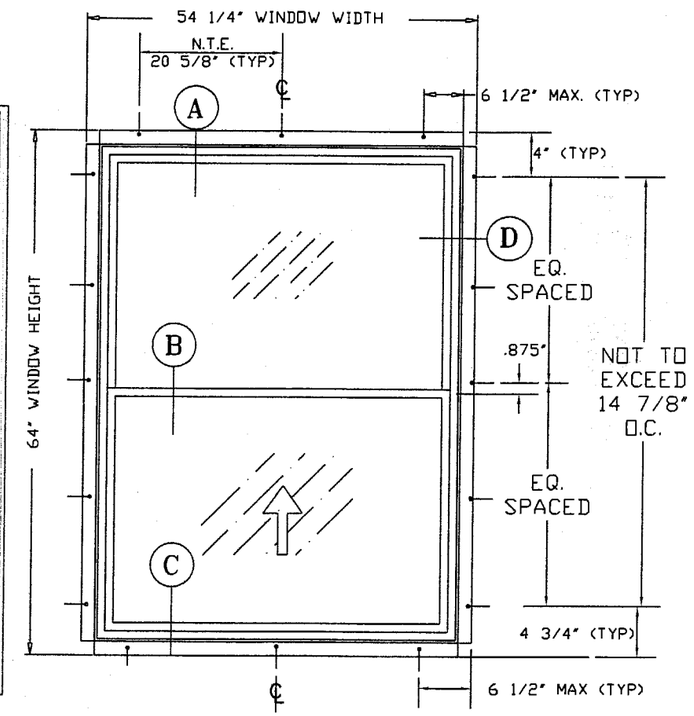

ELEVATION
FIN FRAME S.H. WINDOW

THOMAS J. SOTOS
PROFESSIONAL ENGINEER
FL LIC. # 55225

FEB 12 2003

DATE_____

Commercial tolerances apply unless noted otherwise.

Revision Notes:
1) Revised tables as per ASTM E1300...11/21/2002
2) Revised tables to include 3/16" tempered glass
3) Revised tables (anchors)

Checked By:	Nelson Erazo	Date Checked:	02/12/2003
Drawn By:	Larry Magee	Date Drawn:	11/21/2002
		Scale:	AS NOTED

LAWSON INDUSTRIES, INC.
8501 NW 90th St.
MEDLEY, FLORIDA 33166
(305) 696-8660
MANUFACTURER OF QUALITY ALUMINUM WINDOWS AND GLASS DOORS

Draw Class:	Part Class:	Prod Category:	Series/Model:	Item:	Sheet:
LAYOUT		S.H.	7500	TEST	7 of 7

SERIES-7500 SINGLE HUNG - FIN FRAME WINDOW - TEST UNIT
ASSEMBLY LAYOUT & DETAILS, BILL OF MATERIALS, ELEVATION, INSTALLATION DETAILS, GENERAL NOTES & TEST UNIT PERFORMANCE

Part Number:	Drawing Number:	Revision Level:
	LTU-7500	D-2002