MIAMI-DADE

BUILDING CODE COMPLIANCE OFFICE (BCCO)
PRODUCT CONTROL DIVISION

MIAMI-DADE COUNTY, FLORIDA
METRO-DADE FLAGLER BUILDING
140 WEST FLAGLER STREET, SUITE 1603
MIAMI, FLORIDA 33130-1563
(305) 375-2901 FAX (305) 375-2908

NOTICE OF ACCEPTANCE (NOA)

Rollac Shutters of Texas, Inc.
5331 Orange Street
Pearland, TX 77581

SCOPE:
This NOA is being issued under the applicable rules and regulations governing the use of construction materials. The documentation submitted has been reviewed by Miami-Dade County Product Control Division and accepted by the Board of Rules and Appeals (BORA) to be used in Miami Dade County and other areas where allowed by the Authority Having Jurisdiction (AHJ).

This NOA shall not be valid after the expiration date stated below. The Miami-Dade County Product Control Division (In Miami Dade County) and/or the AHJ (in areas other than Miami Dade County) reserve the right to have this product or material tested for quality assurance purposes. If this product or material fails to perform in the accepted manner, the manufacturer will incur the expense of such testing and the AHJ may immediately revoke, modify, or suspend the use of such product or material within their jurisdiction. BORA reserves the right to revoke this acceptance, if it is determined by Miami-Dade County Product Control Division that this product or material fails to meet the requirements of the applicable building code.
This product is approved as described herein, and has been designed to comply with the High Velocity Hurricane Zone of the Florida Building Code.

DESCRIPTION: Extruded Aluminum Roll-Up Shutter

APPROVAL DOCUMENT: Drawing No. 02-519, titled "Roll-Up Shutter", prepared by Tilteco, Inc. dated 11/12/02, with last revision on 11/12/02, sheets 1 through 13 of 13, bearing the Miami-Dade County Product Control Revision stamp with the Notice of Acceptance number and expiration date by the Miami-Dade County Product Control Division.

MISSILE IMPACT RATING: Large and Small Missile Impact

LABELING: Each unit shall bear a permanent label with the manufacturer's name or logo, city, state and the following statement: "Miami-Dade County Product Control Approved", unless otherwise noted herein.

RENEWAL of this NOA shall be considered after a renewal application has been filed and there has been no change in the applicable building code negatively affecting the performance of this product.

TERMINATION of this NOA will occur after the expiration date or if there has been a revision or change in the materials, use, and/or manufacture of the product or process. Misuse of this NOA as an endorsement of any product, for sales, advertising or any other purposes shall automatically terminate this NOA. Failure to comply with any section of this NOA shall be cause for termination and removal of NOA.

ADVERTISEMENT: The NOA number preceded by the words Miami-Dade County, Florida, and followed by the expiration date may be displayed in advertising literature. If any portion of the NOA is displayed, then it shall be done in its entirety.

INSPECTION: A copy of this entire NOA shall be provided to the user by the manufacturer or its distributors and shall be available for inspection at the job site at the request of the Building Official.
This NOA **revises NOA # 99-0930.06** and consists of this page 1 as well as approval document mentioned above.
The submitted documentation was reviewed by **Candido F. Font, P.E.**

7/03/03

PRODUCT CONTROL ACCEPTED

Rollac Shutter of Texas, Inc.

NOTICE OF ACCEPTANCE: EVIDENCE SUBMITTED

(For File ONLY. Not part of NOA)

A. DRAWINGS

1. Drawing prepared by Tilteco, Inc. titled "Roll-Up Shutter" Drawing No. **02-519**, dated 11/12/02, with last revision on 11/12/02, Sheets 1 through 13 of 13, signed and sealed by W. A. Tillit Jr., P.E on 05/21/03.

B. TESTS

1. Test reports on Large Missile Impact Test per PA 201 and Cyclic Wind Loading Test per PA 203 of Rollac RLL-4 Roll-Up Shutter, by Hurricane Test Laboratory, Inc., report No.0187-0408-99, specimens #6, 7 & 15, dated 04/14 -19/99, signed and sealed by V. J. Abraham, PE.
2. Test reports on Uniform Static Air Pressure Test per PA 202 of Rollac RLL-4 Roll Shutter, by Hurricane Test Laboratory, Inc., report No. 0187-0408-99, specimens # 4, 5, 12, 13 & 14, dated 04/09-13/99 signed and sealed by V. J. Abraham, PE.
3. Test reports on Large Missile Impact Test per PA 201 of Rollac RLL-4 Roll-Up Shutter by Hurricane Test Laboratory, Inc., report No. 0187-0408 & 0414-99, specimens 1-3, 4, 16-17, 5, 18-19, dated 04/11-17/99, signed and sealed by V. J. Abraham, PE.
4. Test reports on Large Missile Impact Test per PA 201 of Mullions, by Hurricane Test Laboratory, Inc., report No. 0187-0423-99, specimens 1-3, 4-6, 7-9 & 10-12dated 04/26-28/99 & 06/16/99, signed and sealed by V. J. Abraham, PE.
5. Test reports on Large Missile Impact Test per PA 201 of Storm Bars, by Hurricane Test Laboratory, Inc., report No. 0187-0413-99, specimens 10-12, 13, 14 & 15-17, dated 04/14/99, 05/19/99, 06/16 & 28/99, signed and sealed by V. J. Abraham, PE.

C. CALCULATIONS

1. Calculations for Roll Shutter prepared Tilteco, Inc., sheets 1 through 92 of 92, signed and sealed by W. A. Tillit Jr, PE. on 07/21/99.

D. MATERIAL CERTIFICATIONS

1. Tensile test report of slats No. 9HM-1836, prepared by Q. C. Metallurgical, Inc. on 09/15/99, signed and sealed by F. Grate, PE.

E. STATEMENTS

1. Code compliance letter issued by Tilteco, Inc., dated 07/22/99, signed and sealed by W. A. Tillit Jr, PE.
2. No financial interest letter issued by Tilteco, Inc., dated 07/22/99, signed and sealed by W. A. Tillit, Jr, PE.
3. Test compliance letter issued by Hurricane Test Laboratory, Inc., dated 07/07/99, signed and sealed by V. J. Abraham, PE.
4. Test Compliance letter issued by Hurricane Test Laboratory, Inc., dated 08/17/99, signed and sealed by V. J. Abraham, PE.

Candido F. Font, P. E.
Senior Product Control Examiner
NOA No 03-0106.02
Expiration Date: May 26, 2008
Approval Date: July 03, 2003

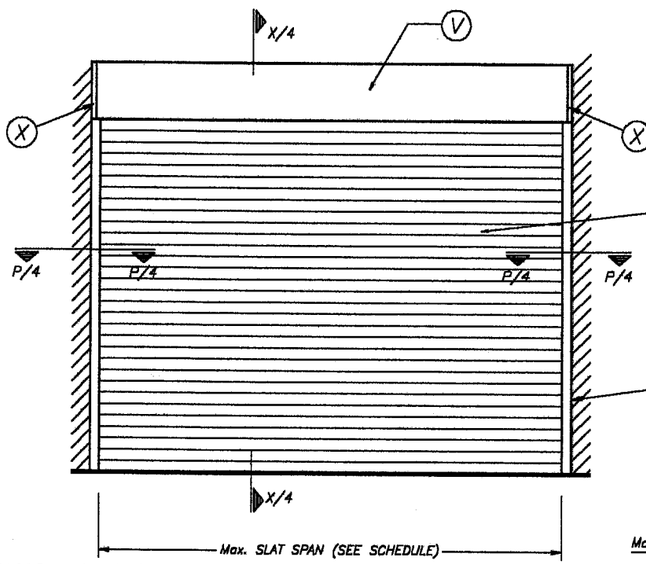

TYPICAL SINGLE UNIT ELEVATION (NO STORM BARS REQUIRED)

NOTE: SEE SHEET 2 & 3 OF 13 FOR COMPONENTS NOMENCLATURE.

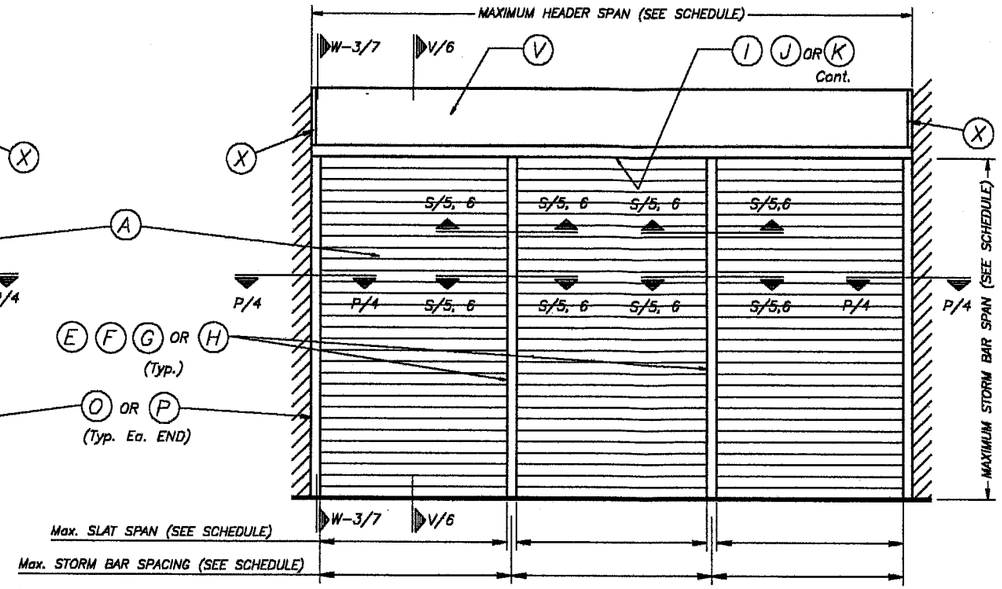

TYPICAL MULTIPLE UNIT ELEVATION (STORM BARS REQUIRED)

NOTE: SEE SHEET 2 & 3 OF 13 FOR COMPONENTS NOMENCLATURE.

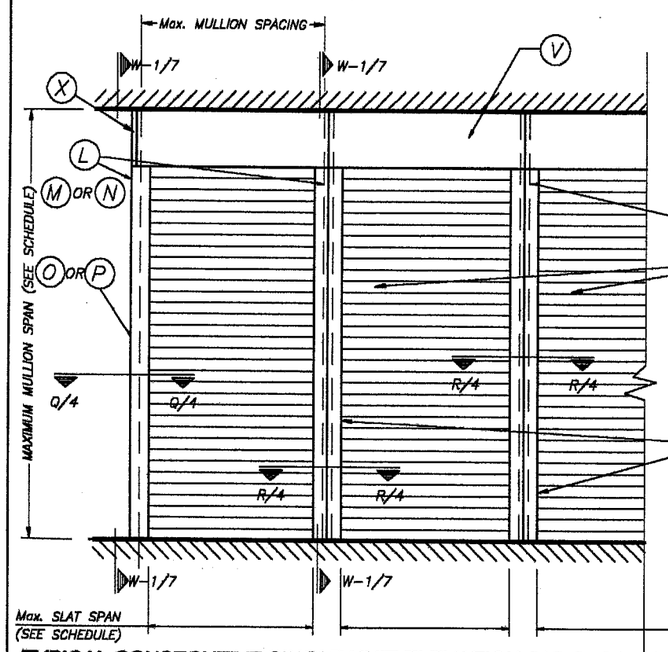

TYPICAL CONSECUTIVE SINGLE UNIT ELEVATION (NO STORM BARS REQUIRED)

NOTE: SEE SHEET 2 & 3 OF 13 FOR COMPONENTS NOMENCLATURE.

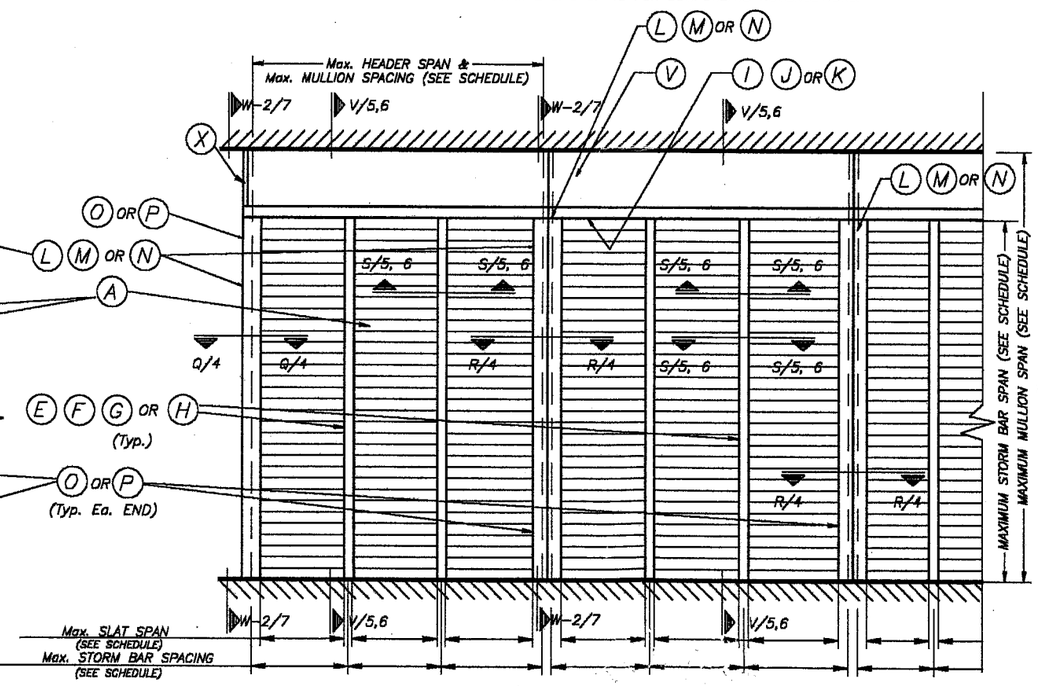

TYPICAL CONSECUTIVE MULTIPLE UNIT ELEVATION (STORM BARS REQUIRED)

NOTE: SEE SHEET 2 & 3 OF 13 FOR COMPONENTS NOMENCLATURE.

GENERAL NOTES:

1. ROLL-UP SHUTTER SHOWN ON THIS PRODUCT APPROVAL DOCUMENT HAS BEEN DESIGNED IN ACCORDANCE WITH THE 2001 EDITION OF THE FLORIDA BUILDING CODE.
   DESIGN WIND LOADS SHALL BE DETERMINED AS PER SECTION 1619 OF THE ABOVE MENTIONED CODE, FOR A BASIC WIND SPEED OF 146 m.p.h., AND IN ACCORDANCE W/ ASCE 7-98 STANDARD.
   ROLL-UP SHUTTER'S ADEQUACY FOR IMPACT AND FATIGUE RESISTANCE HAS BEEN VERIFIED IN ACCORDANCE WITH SECTION 1606.1.4 OF THE ABOVE MENTIONED CODE AS PER HURRICANE TESTING LAB. REPORTS # 0187-0408-99, 0187-0423-99, 0187-0413-99, 0187-0414-99 AS PER PA-201, PA-202 & PA-203.
2. ALL ALUMINUM EXTRUSIONS SHALL BE 6063-T5 ALLOY (UNLESS OTHERWISE NOTED).
3. ALL SCREWS TO BE STAINLESS STEEL 304 OR 316 SERIES W/50 ksi YIELD POINT AND 90 ksi TENSILE STRENGTH OR CORROSION RESISTANT COATED CARBON STEEL AS PER DIN 50018.
4. BOLTS TO BE 2024-T4 ALUMINUM ALLOY, GALVANIZED OR STAINLESS STEEL WITH 36 ksi MINIMUM YIELD POINT.
5. STORM BARS AT FLOOR OR CEILING MOUNTING INSTALLATIONS MAY BE REMOVABLE AT NON HURRICANE CONDITIONS. HOWEVER, EACH STORM BAR SHALL BEAR A PERMANENT LABEL IN A VISIBLE PLACE WITH A WARNING NOTE INSTRUCTING THE TENANT OR OWNER THAT STORM BARS MUST BE INSTALLED WITH CORRESPONDING HARDWARE DURING PERIODS OF HURRICANE WARNING AND THAT ROLL UP SHUTTERS WILL NOT OFFER HURRICANE PROTECTION UNLESS ALL STORM BARS ARE INSTALLED AS DIRECTED.
6. ANCHORS TO WALL FOR SIDE RAILS & BOX CONNECTION SHALL BE AS FOLLOWS: (UNLESS OTHERWISE NOTED)
   (A) TO EXISTING POURED CONCRETE : MIN. 3000 p.s.i. COMPRESSIVE STRENGTH.
   -1/4" ø TAPCON ANCHORS AS MANUFACTURED BY I.T.W./BUILDEX OR ELCO TEXTRON
   NOTES:
   A.1) MINIMUM EMBEDMENT OF TAPCON ANCHORS INTO POURED CONCRETE SHALL BE 1 3/4". NO EMBEDMENT INTO STUCCO SHALL BE CONSIDERED AS PART OF THE REQUIRED EMBEDMENT.
   A.2) IN CASE THAT PRECAST STONE, PRECAST CONCRETE PANELS, OR PAVERS BE FOUND ON THE EXISTING WALL OR FLOOR, ANCHORS SHALL BE LONG ENOUGH TO REACH THE MAIN STRUCTURE BEHIND SUCH PANELS.
   (B) TO EXISTING CONCRETE BLOCK WALL:
   -1/4" ø TAPCON ANCHORS, AS MANUFACTURED BY I.T.W./BUILDEX OR ELCO TEXTRON
   NOTES:
   B.1) MINIMUM EMBEDMENT OF TAPCON ANCHORS, INTO THE CONCRETE BLOCK UNIT SHALL BE 1 1/4".
   B.2) IN CASE THAT PRECAST STONE OR PRECAST CONCRETE PANELS BE FOUND ON THE EXISTING WALL, ANCHORS SHALL BE LONG ENOUGH TO REACH THE MAIN STRUCTURE BEHIND SUCH PANELS.
   (C) ANCHORS SHALL BE INSTALLED FOLLOWING ALL OF THE RECOMENDATIONS AND SPECIFICATIONS OF THE ANCHOR'S MANUFACTURER.
   (D) ANCHORS REQUIRED FOR STORM BARS, HEADERS & MULLION COONECTIONS SHALL BE AS SPECIFIED ON APPLICABLE SECTIONS SHOWN ON SHEETS 5 & 6 OF 13 RESPECTIVELY.
   POWER BOLTS & CALK-IN ANCHORS TO BE AS MANUFACTURED BY POWERS FASTENING, INC.
   MINIMUM EDGE DISTANCE AND SPACING FOR ABOVE MENTIONED ANCHORS SHALL BE AS INDICATED BELOW OR AS SHOWN ON CORRESPONDING DETAILS FOR EACH SHUTTER COMPONENT INSTALLATION IN THIS DRAWING, WHICHEVER IS LARGER (MORE CRITICAL).

ANCHOR	SPACING	EDGE DISTANCE
3/8"ø POWER BOLT	3 3/4"	4 1/2"
1/4"ø CALK-IN	2 1/2"	3"
1/4"ø TAPCON	3"	2 1/2"

7. IT SHALL BE THE RESPONSIBILITY OF THE CONTRACTOR TO VERIFY THE SOUNDNESS OF THE STRUCTURE WHERE SHUTTER IS TO BE ATTACHED TO INSURE PROPER ANCHORAGE.
8. SHUTTER MANUFACTURER'S STAMP SHALL BE PLACED ON THE EXPOSED SURFACE OF THE SIDE RAIL APPROXIMATELY 4" ABOVE THE BOTTOM OF SUCH RAIL.
   STAMP SHALL READ AS FOLLOWS:
   ROLLAC SHUTTERS OF TEXAS, INC.
   PEARLAND, TX.
   MIAMI-DADE COUNTY PRODUCT CONTROL APPROVED.
9. ROLL-UP MECHANISM NOT PART OF THIS APPROVAL, BUT SHALL BE CERTIFIED BY AN INDEPENDENT TESTING AGENCY.
10. (A) THIS PRODUCT APPROVAL DOCUMENT (P.A.D.) PREPARED BY THIS ENGINEER IS GENERIC AND DOES NOT PROVIDE INFORMATION FOR A SITE SPECIFIC PROJECT; i.e. WHERE THE SITE CONDITIONS DEVIATE FROM THE P.A.D.
    (B) CONTRACTOR TO BE RESPONSIBLE FOR THE SELECTION, PURCHASE AND INSTALLATION OF THIS PRODUCT BASED ON THIS PRODUCT APPROVAL PROVIDED HE/SHE DOES NOT DEVIATE FROM THE CONDITIONS DETAILED ON THIS DOCUMENT. CONSTRUCTION SAFETY AT SITE IS THE CONTRACTOR'S RESPONSIBILITY.
    (C) THIS PRODUCT APPROVAL DOCUMENT WILL BE CONSIDERED INVALID IF MODIFIED.
    (D) SITE SPECIFIC PROJECTS SHALL BE PREPARED BY A FLORIDA REGISTERED ENGINEER OR ARCHITECT WHICH WILL BECOME THE PROFESSIONAL OF RECORD (P.O.R) FOR THE PROJECT AND WHO WILL BE RESPONSIBLE FOR THE PROPER USE OF THE P.A.D.
    (E) THIS P.A.D. SHALL COMPLY WITH SECTION 2: 61G15 OF THE FLORIDA ADMINISTRATIVE CODE.

PRODUCT REVISED
as complying with the Florida
Building Code
Acceptance No. 03-0106.02
Expiration Date 05/26/08
By:
Miami Dade Product Control
Division

F.B.C. (H.V.H.Z.) / MIAMI-DADE COUNTY

MAY 21 2003

TILTECO INC.
TILLIT TESTING & ENGINEERING COMPANY
8695 N.W. 36th. St., Ste. 217, VIRGINIA GARDENS, FL 33166
Phone : (305)871-1530 . Fax : (305)871-1531
EB-0006719
WALTER A. TILLIT Jr. P. E.
FLORIDA Lic. # 44167

ROLL-UP SHUTTER

Rollac Shutters of Texas, Inc.
5331 ORANGE STREET
PEARLAND, TX 77581

REV. No	DESCRIPTION	DATE	REV. No	DESCRIPTION	DATE
1	OLD 99-134	11/12/02	3		
2	-	-	4		

AS SHOWN
SCALE

11/12/02
DATE

02-519
DRAWING No

SHEET 1 OF 13

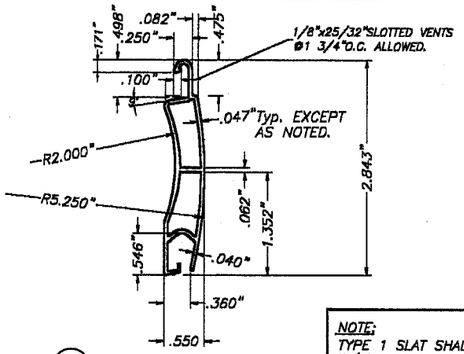

NOTE:
TYPE 1 SLAT SHALL BE INSTALLED W/SIDE LOCKS AT EVERY OTHER SLAT.

(A) TYPE 1 SLAT:

RLL–4 SLAT
EXTRUDED ALUMINUM
6063–T5 ALUMINUM ALLOY
SCALE: 1/2" = 1"

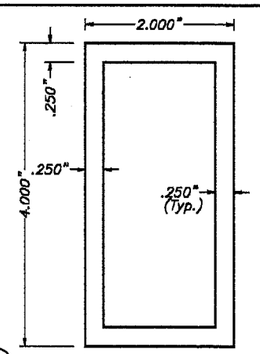

(E) TYPE 1 STORM BAR:

4" HEAVY EXTRUDED STORM BAR
6063–T6 ALUMINUM ALLOY
SCALE: 1/2" = 1"

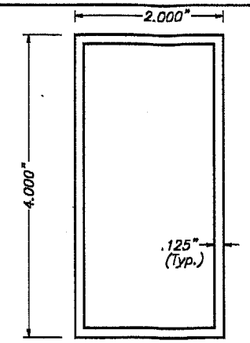

(F) TYPE 2 STORM BAR:

4" EXTRUDED STORM BARS
6063–T6 ALUMINUM ALLOY
SCALE: 1/2" = 1"

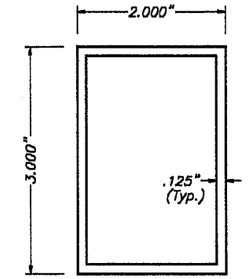

(G) TYPE 3 STORM BAR:

3" EXTRUDED STORM BARS
6063–T6 ALUMINUM ALLOY
SCALE: 1/2" = 1"

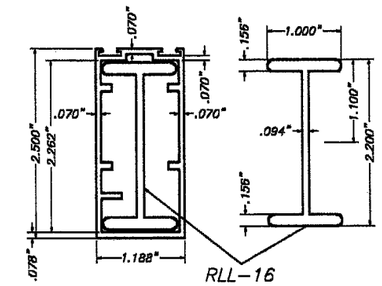

(H) TYPE 4 STORM BAR:

RLL–15 + RLL–16 EXTRUDED STORM BAR
6063–T5 ALUMINUM ALLOY
SCALE: 1/2" = 1"

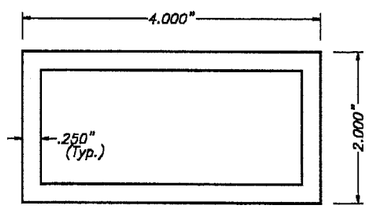

(I) TYPE 1 HEADER:

4" HEAVY EXTRUDED HEADER
6063–T6 ALUMINUM ALLOY
SCALE: 1/2" = 1"

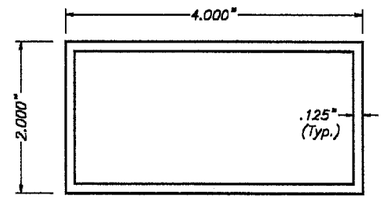

(J) TYPE 2 HEADER:

4" EXTRUDED HEADER
6063–T6 ALUMINUM ALLOY
SCALE: 1/2" = 1"

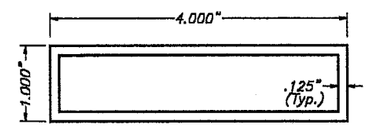

(K) TYPE 3 HEADER:

1"x4" EXTRUDED HEADER
6063–T5 ALUMINUM ALLOY
SCALE: 1/2" = 1"

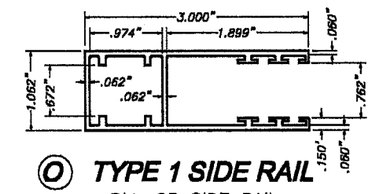

(O) TYPE 1 SIDE RAIL

RLL–25 SIDE RAIL
6063–T5 Alum. ALLOY
SCALE: 1/2" = 1"

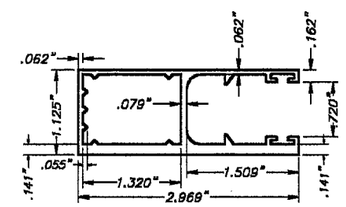

(P) TYPE 2 SIDE RAIL

RLL–40 SIDE RAIL
6063–T5 Alum. ALLOY
SCALE: 1/2" = 1"

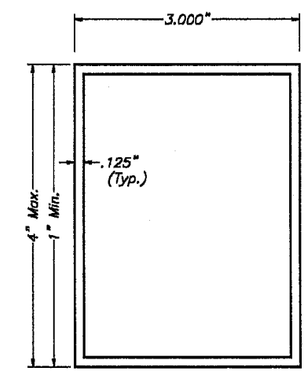

(Y) BUILD-OUT TUBES

3"x4" EXTRUDED TUBE
6063–T5 ALUMINUM ALLOY
SCALE: 1/2" = 1"

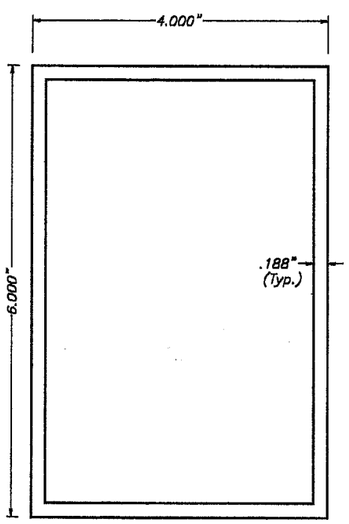

(L) TYPE 1 MULLION:

6" EXTRUDED MULLION
6063–T5 ALUMINUM ALLOY
SCALE: 1/2" = 1"

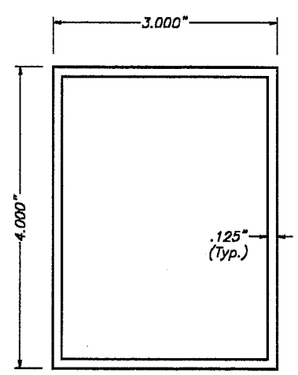

(M) TYPE 2 MULLION:

4" EXTRUDED MULLION
6063–T5 ALUMINUM ALLOY
SCALE: 1/2" = 1"

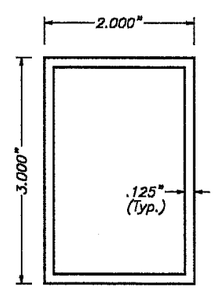

(N) TYPE 3 MULLION:

3" EXTRUDED MULLION
6063–T6 ALUMINUM ALLOY
SCALE: 1/2" = 1"

PRODUCT REVISED
as complying with the Florida Building Code
Acceptance No 03-0106.02
Expiration Date 03/26/08
By
Miami Dade Product Control Division

F.B.C. (H.V.H.Z.) / MIAMI–DADE COUNTY

MAY 21 2003

TILTECO INC.
TILLIT TESTING & ENGINEERING COMPANY
6580 N.W. 36th. St., Ste. 217, VIRGINIA GARDENS, Fl. 33166
Phone : (305)871–1530 , Fax : (305)871–1531
EB–0006719
WALTER A. TILLIT Jr. P. E.
FLORIDA Lic. # 44167

ROLL–UP SHUTTER

Rollac Shutters of Texas, Inc.
5331 ORANGE STREET
PEARLAND, TX 77581

REV. No	DESCRIPTION	DATE	REV. No	DESCRIPTION	DATE
1	OLD 99–134	11/12/02	3		
2	–	–	4		

AS SHOWN
SCALE

11/12/02
DATE

02–519
DRAWING No

SHEET 2 OF 13

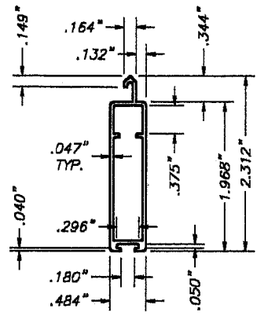

RLL-6
EXTRUDED ALUMINUM
6063-T5 ALUMINUM ALLOY

(14) DETAIL

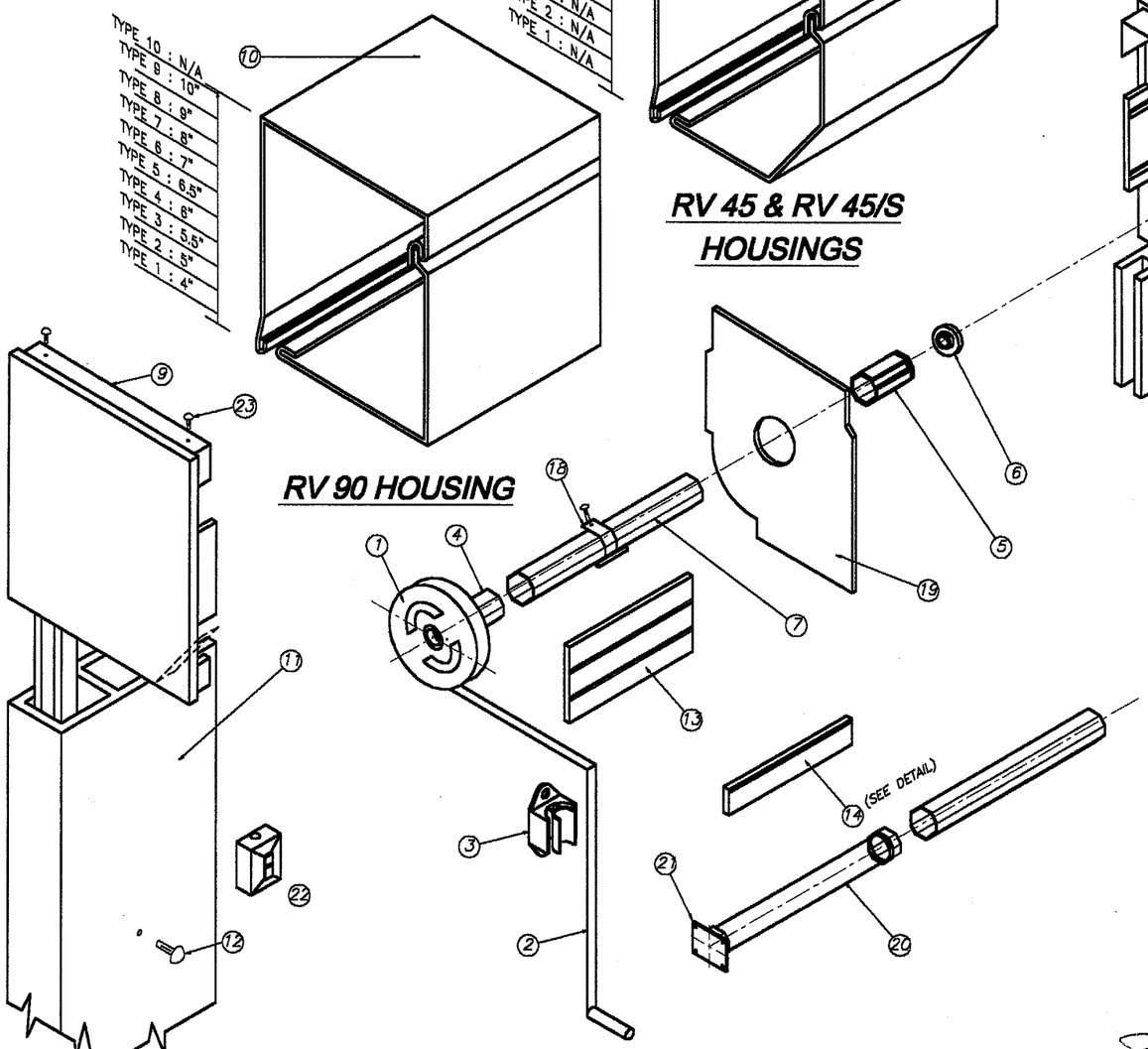

RV 45 & RV 45/S HOUSINGS

RV 90 HOUSING

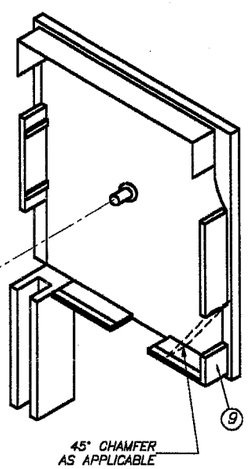

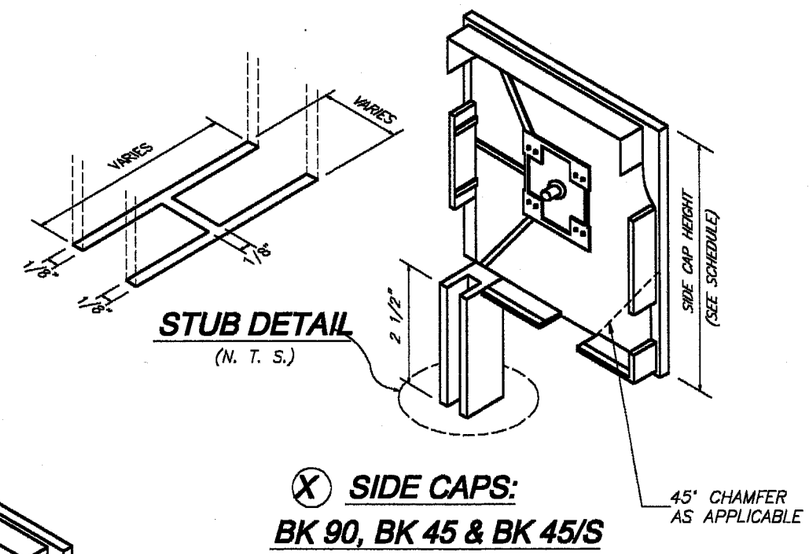

STUB DETAIL
(N. T. S.)

(X) SIDE CAPS: BK 90, BK 45 & BK 45/S

COMPONENTS FOR GEAR OPERATED SYSTEM

(1) – GEAR
(2) – UNIVERSAL & CRANK
(3) – CRANK HOLDER(OPTIONAL)
(4) – GEAR INSERT(GEAR TO AXLE CONNECTOR)
(5) – IDLER INSERT
(6) – BALL BEARING
(7) – OCTAGONAL AXLE
(9) – SIDE/END CAP
(10) – HOUSING(FRONT & BOTTOM), 0.040" THICK
(11) – SIDE RAIL
(12) – PLUG-BUTTOMS
(13) – ALUMINUM SLATS
(14) – BASE SLAT
(15) – PLASTIC STOPS(OPTIONAL)
(16) – SIDE LOCKS(OPTIONAL)
(17) – STAPLES(OPTIONAL)
(18) – SPRINGLOCK HANGER
(19) – SAFETY PLATES

ADDITIONAL COMPONENTS FOR MOTORIZED OPERATED SYSTEM

(20) – TUBULAR MOTOR
(21) – MOTOR BRACKET
(22) – SWITCH

FASTENERS

(23) – 3/16" ALUMINUM POP RIVETS(6 REQ'D EA. SIDE CAP) : 2 @ TOP, 2 @ REAR, 2@ BOTTOM

SIDE CAP HEIGHT SCHEDULE		
TYPE	90°	45°
1	4.0"	N/A
2	5.0"	N/A
3	5.5"	N/A
4	6.0"	6.0"
5	6.5"	6.5"
6	7.0"	7.0"
7	8.0"	8.0"
8	9.0"	9.0"
9	10.0"	10.0"
10	N/A	12.0"

N/A = NOT APPLICABLE

PRODUCT REVISED
as complying with the Florida Building Code
Acceptance No. 03-0106.02
Expiration Date 05/26/08
By
Miami Dade Product Control Division

(V) BOX COMPONENTS AND ASSEMBLY DETAIL

MAY 21 2003

F.B.C. (H.V.H.Z.) / MIAMI-DADE COUNTY

TILTECO INC.
TILLIT TESTING & ENGINEERING COMPANY
6595 N.W. 36th. St., Ste. 217, VIRGINIA GARDENS, Fl. 33166
Phone : (305)871-1530 , Fax : (305)871-1531
EB-0006719
WALTER A. TILLIT, Jr. P. E.
FLORIDA Lic. # 44167

ROLL-UP SHUTTER

Rollac Shutters of Texas, Inc.
5331 ORANGE STREET
PEARLAND, TX 77581

REV. No	DESCRIPTION	DATE	REV. No	DESCRIPTION	DATE
1	OLD 99-134	11/12/02	3		
2	–	–	4		

AS SHOWN
SCALE
11/12/02
DATE
02-519
DRAWING No
SHEET 3 OF 13

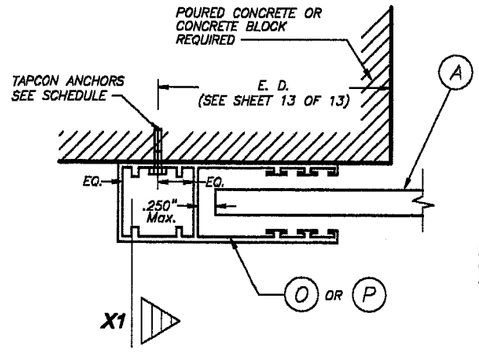

SECTION P - P (1) : WALL MOUNT

SCALE: FULL

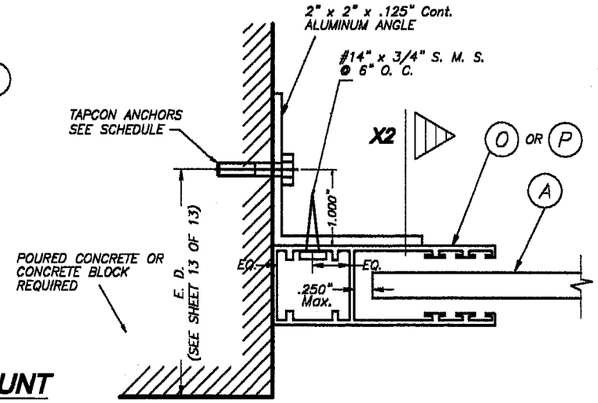

SECTION P - P (2) : SIDE WALL MOUNT

SCALE: 1/2" = 1"

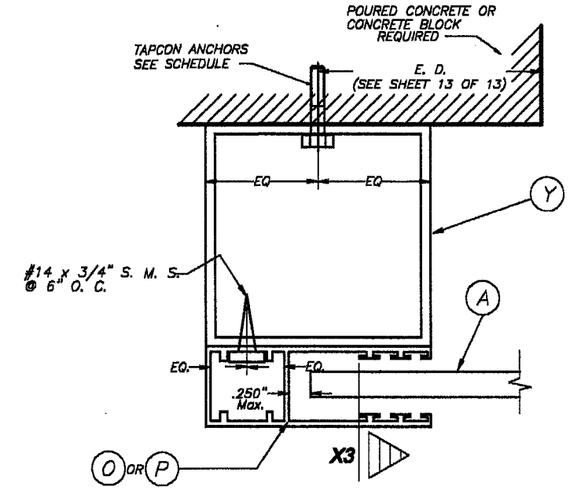

SECTION P - P (3) : BUILD-OUT

SCALE: 1/2" = 1"

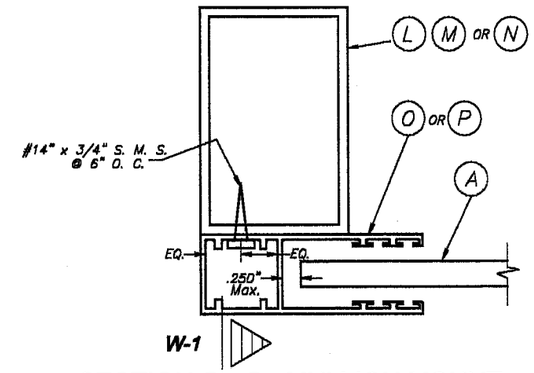

SECTION Q - Q : MULLION MOUNT

SCALE: 1/2" = 1"

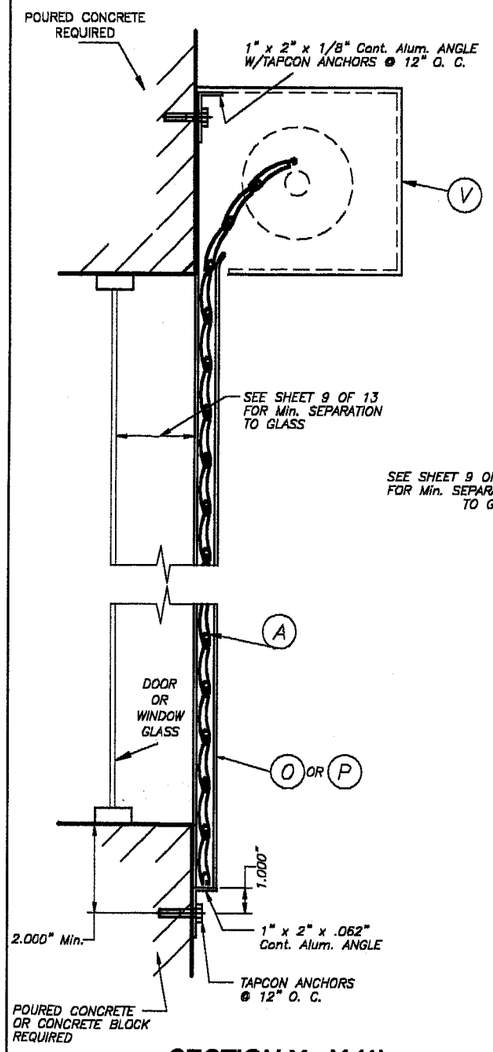

SECTION X - X (1)

N. T. S.

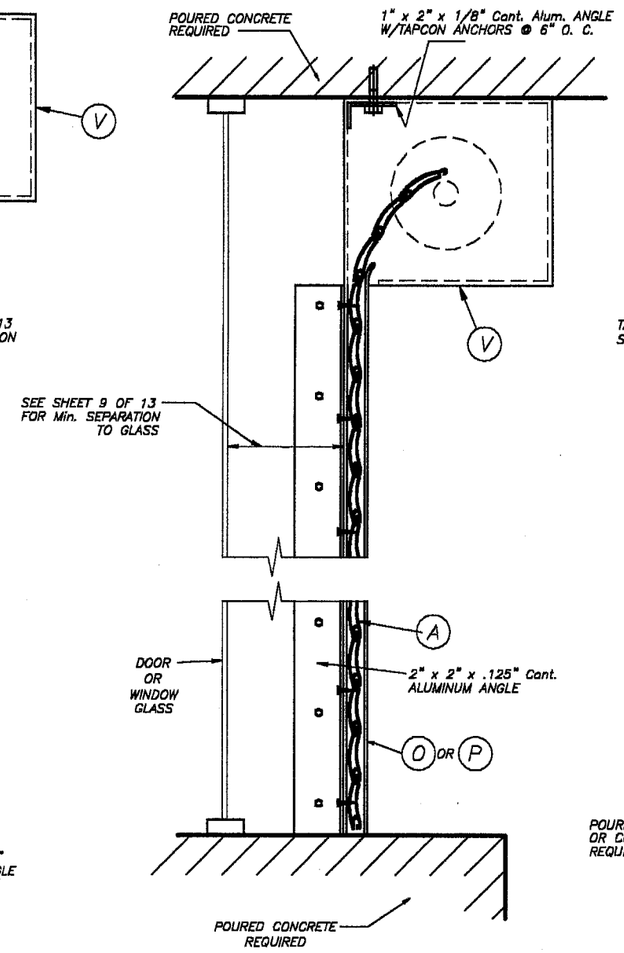

SECTION X - X (2)

N. T. S.

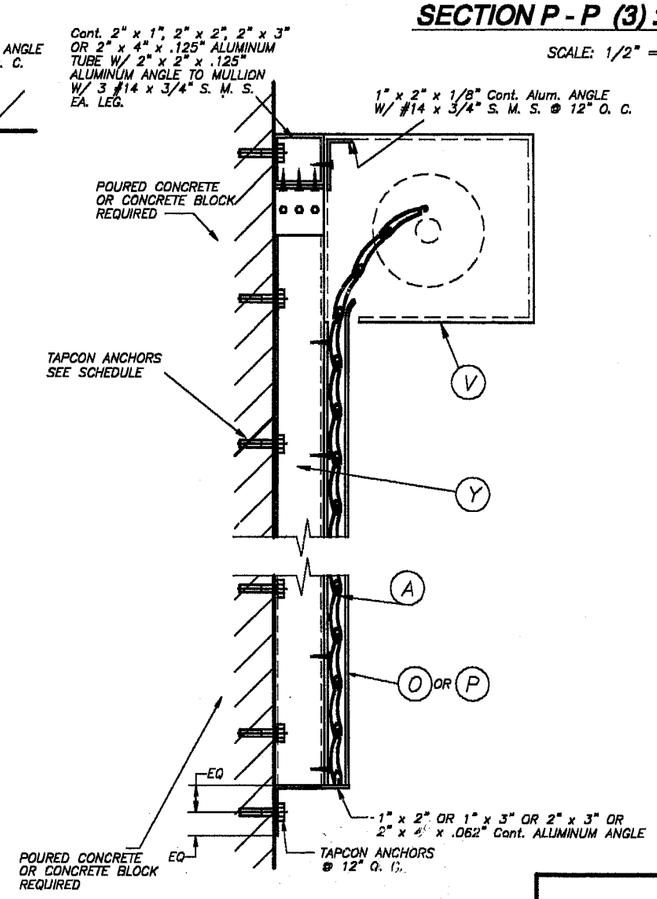

SECTION X - X (3)

N. T. S.

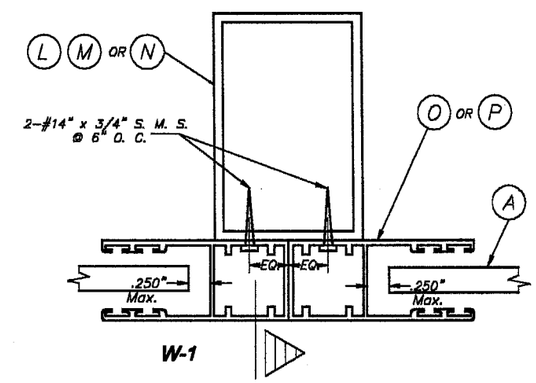

SECTION R - R : MULLION MOUNT

SCALE: 1/2" = 1"

PRODUCT REVISED
as complying with the Florida Building Code
Acceptance No 03-0106.02
Expiration Date 05/26/08
By
Miami Dade Product Control Division

F.B.C. (H.V.H.Z.) / MIAMI-DADE COUNTY

MAY 21 2003

TILTECO INC.
TILLIT TESTING & ENGINEERING COMPANY
6595 N.W. 36th. St., Ste. 217, VIRGINIA GARDENS, Fl. 33166
Phone : (305)871-1530 , Fax : (305)871-1531
EB-0006719
WALTER A. TILLIT Jr. P. E.
FLORIDA Lic. # 44167

ROLL-UP SHUTTER

Rollac Shutters of Texas, Inc.
5331 ORANGE STREET
PEARLAND, TX 77581

REV. No	DESCRIPTION	DATE	REV. No	DESCRIPTION	DATE
1	OLD 99-134	11/12/02	3		
2	–	–	4		

AS SHOWN SCALE
11/12/02 DATE
02-519 DRAWING No
SHEET 4 OF 13

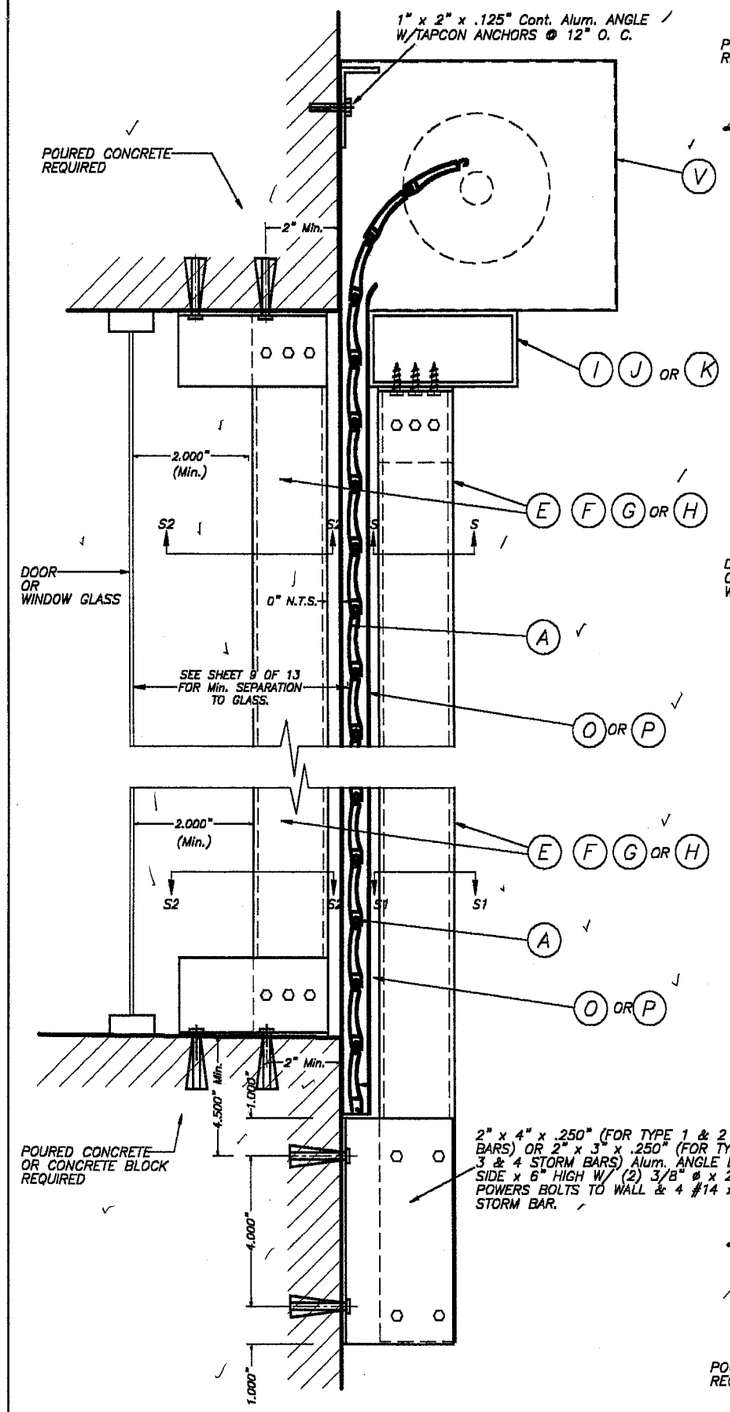

WALL MOUNTING : SECTION V - V (1)

SCALE : 1/4" = 1"

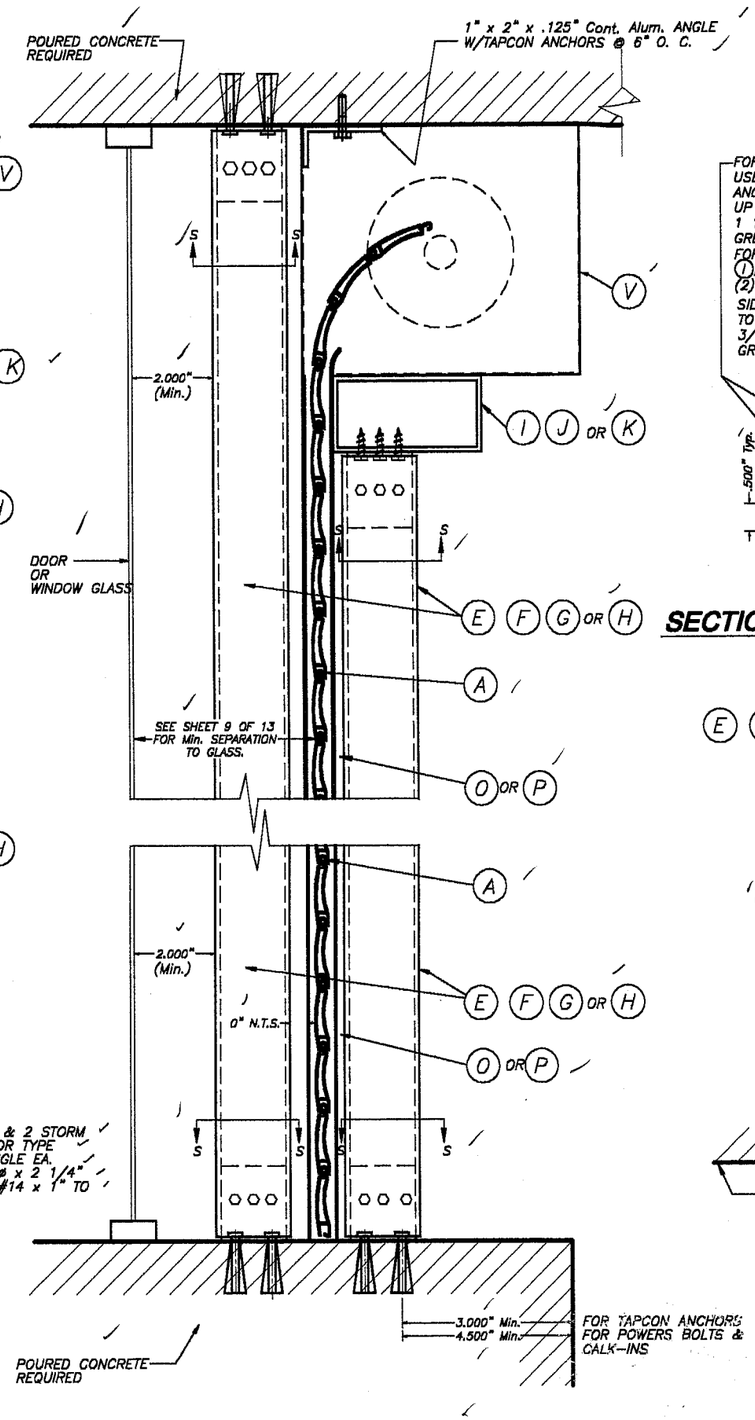

CEILING & FLOOR MOUNTING : SECTION V - V (2)

SCALE : 1/4" = 1"

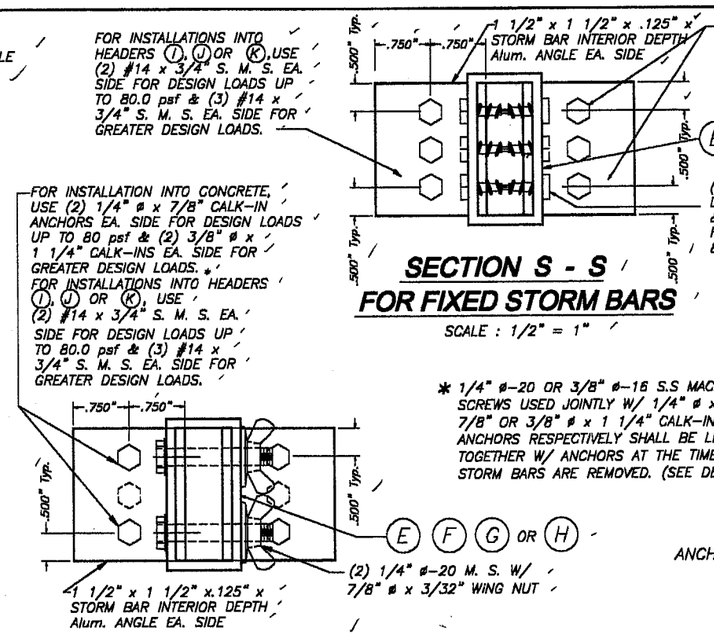

SECTION S - S FOR FIXED STORM BARS

SCALE : 1/2" = 1"

SECTION S - S (FOR REMOVABLE STORM BARS)

SCALE : 1/2" = 1"

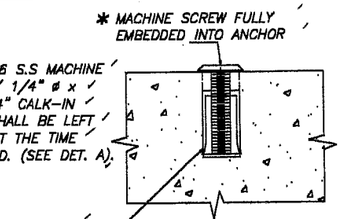

DETAIL A

SCALE : 1/2" = 1"

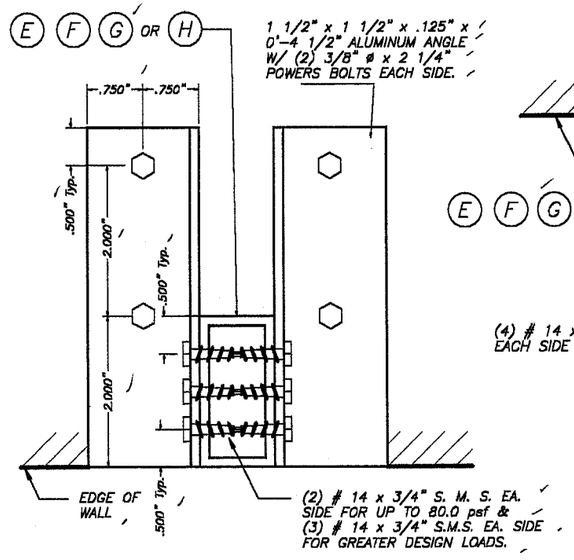

SECTION S2 - S2

SCALE : 1/2" = 1"

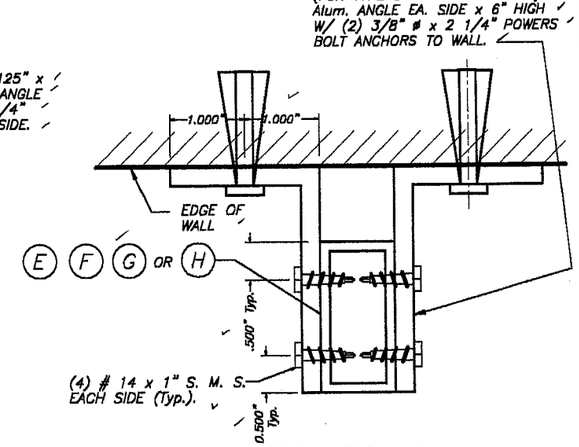

SECTION S1 - S1

SCALE : 1/2" = 1"

PRODUCT REVISED
as complying with the Florida Building Code
Acceptance No 03-0106.02
Expiration Date 03/26/08
By
Miami Dade Product Control Division

F.B.C. (H.V.H.Z.) / MIAMI-DADE COUNTY

MAY 21 2003

TILTECO INC.
TILLIT TESTING & ENGINEERING COMPANY
6585 N.W. 36th. St., Ste. 217, VIRGINIA GARDENS, FL 33166
Phone : (305)871-1530 , Fax : (305)871-1531
EB-0006719
WALTER A. TILLIT Jr. P. E.
FLORIDA Lic. # 44167

ROLL-UP SHUTTER

Rollac Shutters of Texas, Inc.
5331 ORANGE STREET
PEARLAND, TX 77581

REV. No	DESCRIPTION	DATE	REV. No	DESCRIPTION	DATE
1	OLD 99-134	11/12/02	3		
2	–	–	4		

AS SHOWN SCALE
11/12/02 DATE
02-519 DRAWING No
SHEET 5 OF 13

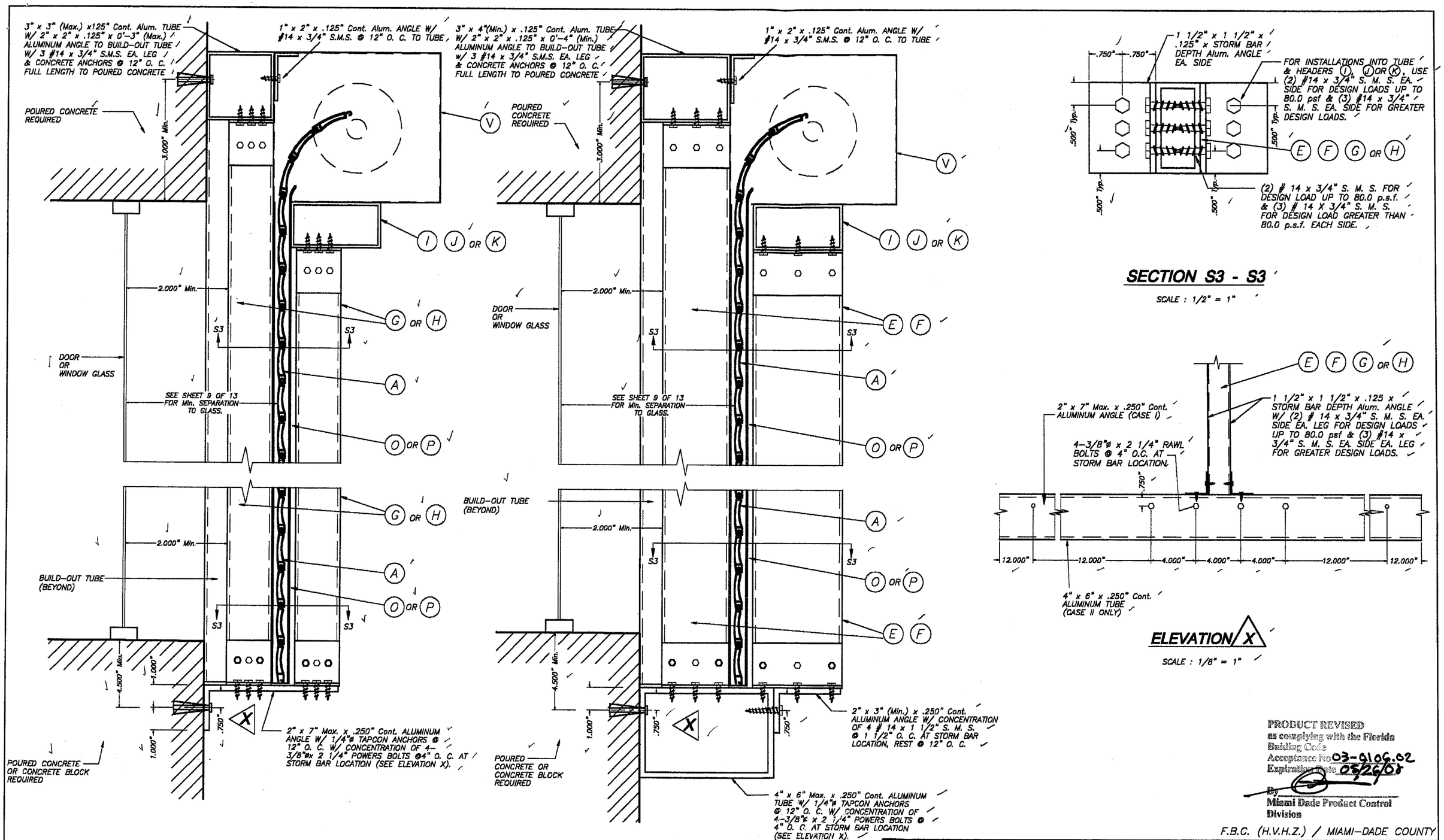

STORM BAR CONNECTION AT BUILD-OUT INSTALLATION : SECTIONS V - V (3)

SCALE : 1/4" = 1"

PRODUCT REVISED
as complying with the Florida Building Code
Acceptance No 03-0106.02
Expiration Date 05/26/08
By
Miami Dade Product Control Division

F.B.C. (H.V.H.Z.) / MIAMI-DADE COUNTY

MAY 21 2003

TILTECO INC.
TILLIT TESTING & ENGINEERING COMPANY
6695 N.W. 36th. St., Ste. 217, VIRGINIA GARDENS, Fl. 33166
Phone : (305)871-1530 . Fax : (305)871-1531
EB-0006719
WALTER A. TILLIT Jr. P. E.
FLORIDA Lic. # 44167

ROLL-UP SHUTTER

Rollac Shutters of Texas, Inc.
5331 ORANGE STREET
PEARLAND, TX 77581

AS SHOWN SCALE
11/12/02 DATE
02-519 DRAWING No

REV. No	DESCRIPTION	DATE	REV. No	DESCRIPTION	DATE
1	OLD 99-134	11/12/02	3		
2	--	--	4		

SHEET 6 OF 13

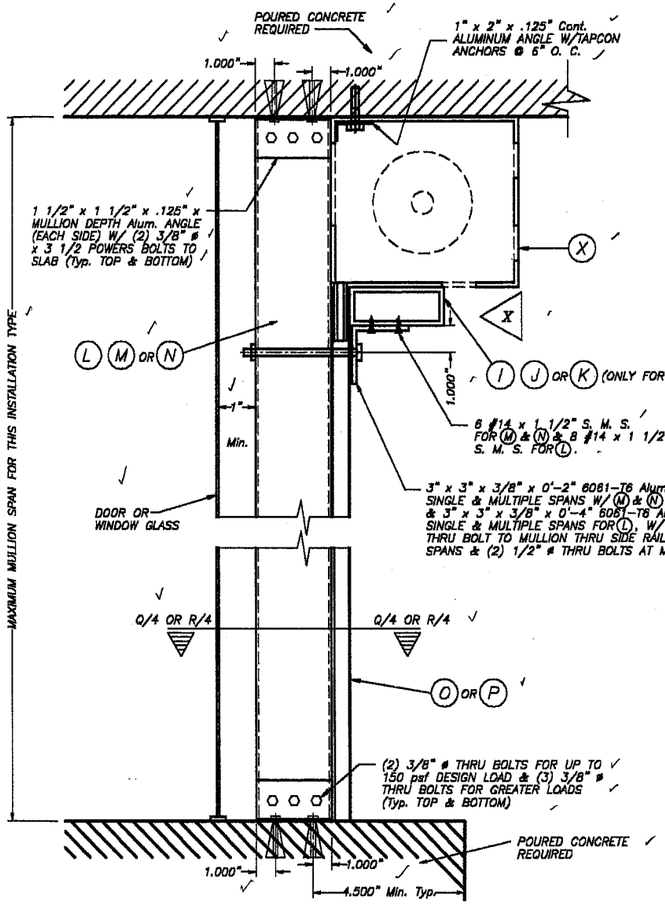

FLOOR/CEILING MOUNTING : SECTION W-W (1), W/O HEADER SECTION W-W (2), W/HEADER

SCALE : 1/8" = 1"

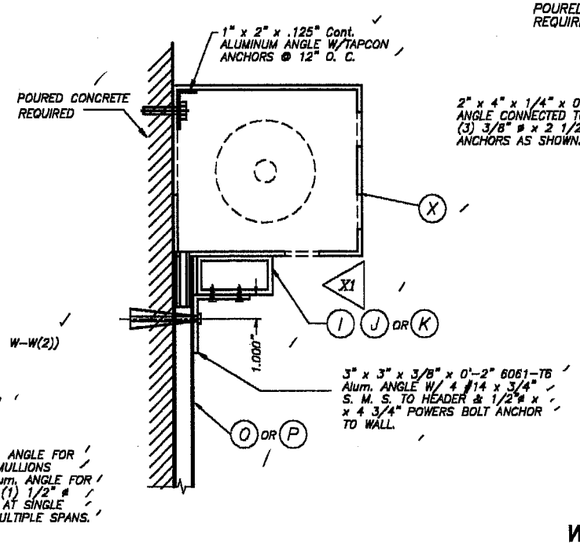

WALL MOUNTING : SECTION W-W (3)

SCALE : 1/8" = 1"

NOTE :
THIS INSTALLATION IS ONLY VALID FOR STORM BARS WITH Max. SPAN = 8'-0", HEADERS WITH 12'-0" Max. SINGLE SPAN & 80 psf MAXIMUM DESIGN LOAD.

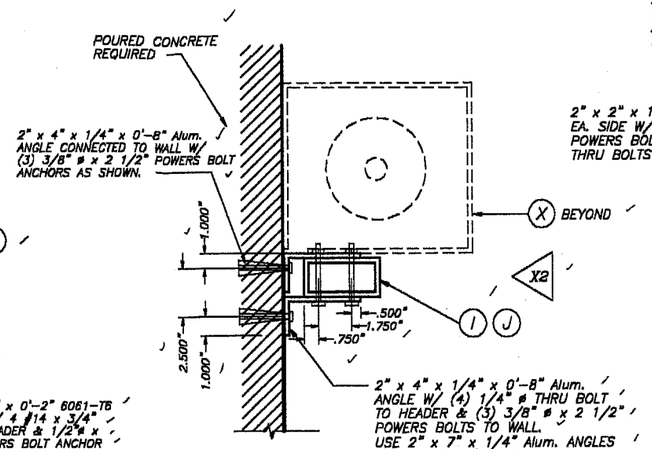

WALL MOUNTING : SECTION W-W(3)

SCALE : 1/8" = 1"

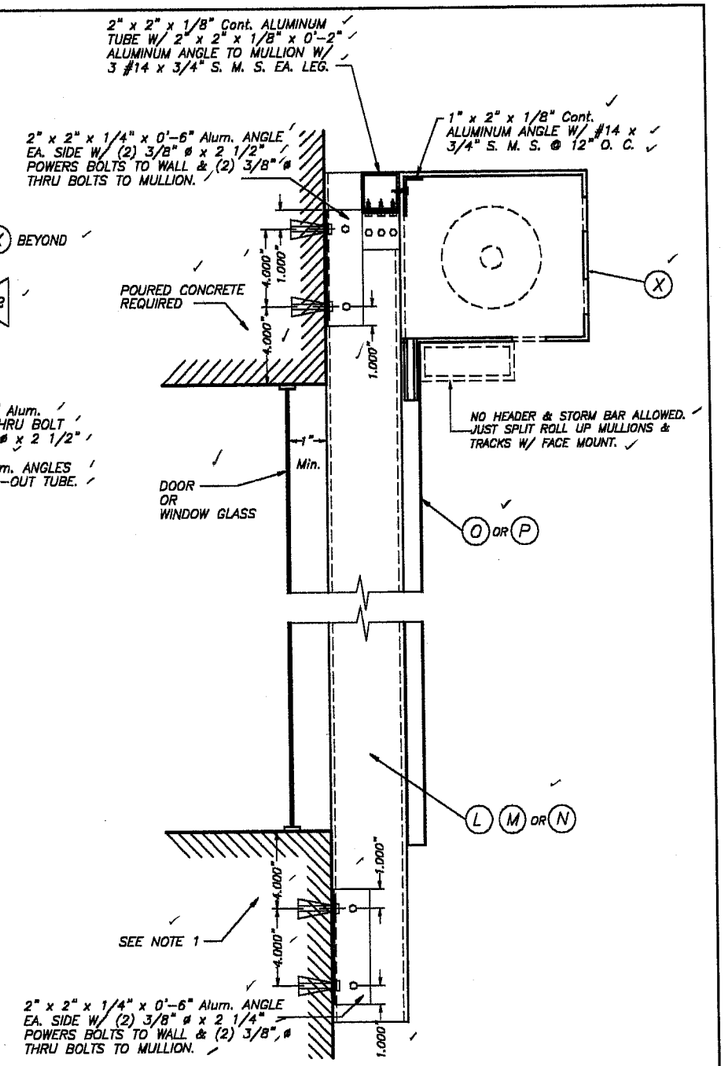

WALL MOUNTING : MULLION CONNECTION AT TOP & BOTTOM : SECTION W-W (1)

SCALE : 1/8" = 1"

NOTE 1 :
EXISTING WALL MAY BE POURED CONCRETE OR CONCRETE BLOCK FOR DESIGN LOADS UP TO 80.0 psf AND SHALL BE POURED CONCRETE OR CONCRETE FILLED BLOCKS FOR GREATER LOADS.

PRODUCT REVISED
as complying with the Florida Building Code
Acceptance No 03-0106.02
Expiration Date 05/26/08
By
Miami Dade Product Control Division

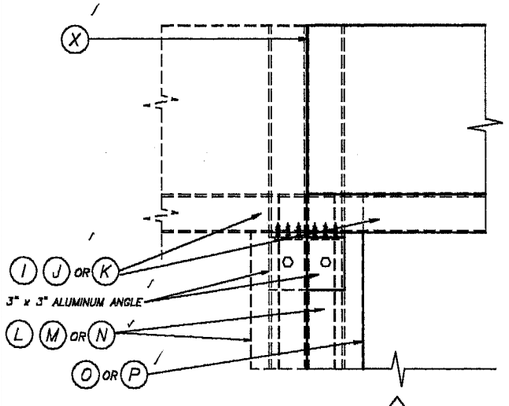

ELEVATION X

SCALE : 1/8" = 1"

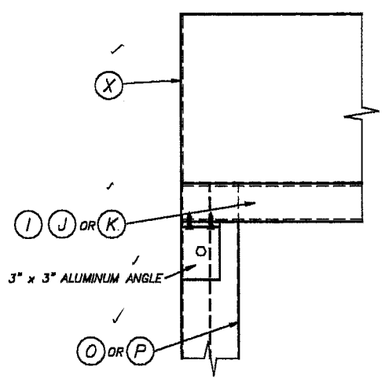

ELEVATION X1

SCALE : 1/8" = 1"

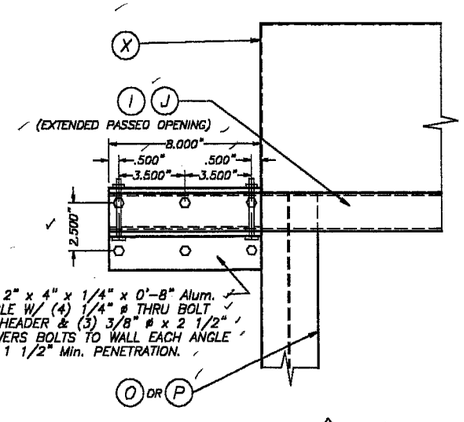

ELEVATION X2

SCALE : 1/8" = 1"

TYPICAL HEADER CONNECTION AT ENDS: SECTIONS W-W

MAY 21 2003

F.B.C. (H.V.H.Z.) / MIAMI-DADE COUNTY

TILTECO INC.
TILLIT TESTING & ENGINEERING COMPANY
6595 N.W. 36th. St., Ste. 217, VIRGINIA GARDENS, FL 33166
Phone : (305)871-1530 , Fax : (305)871-1531
EB-0006719
WALTER A. TILLIT Jr. P. E.
FLORIDA Lic. # 44167

ROLL-UP SHUTTER

Rollac Shutters of Texas, Inc.
5331 ORANGE STREET
PEARLAND, TX 77581

REV. No	DESCRIPTION	DATE	REV. No	DESCRIPTION	DATE
1	OLD 99-134	11/12/02	3		
2	–	–	4		

AS SHOWN SCALE
11/12/02 DATE
02-519 DRAWING No
SHEET 7 OF 13

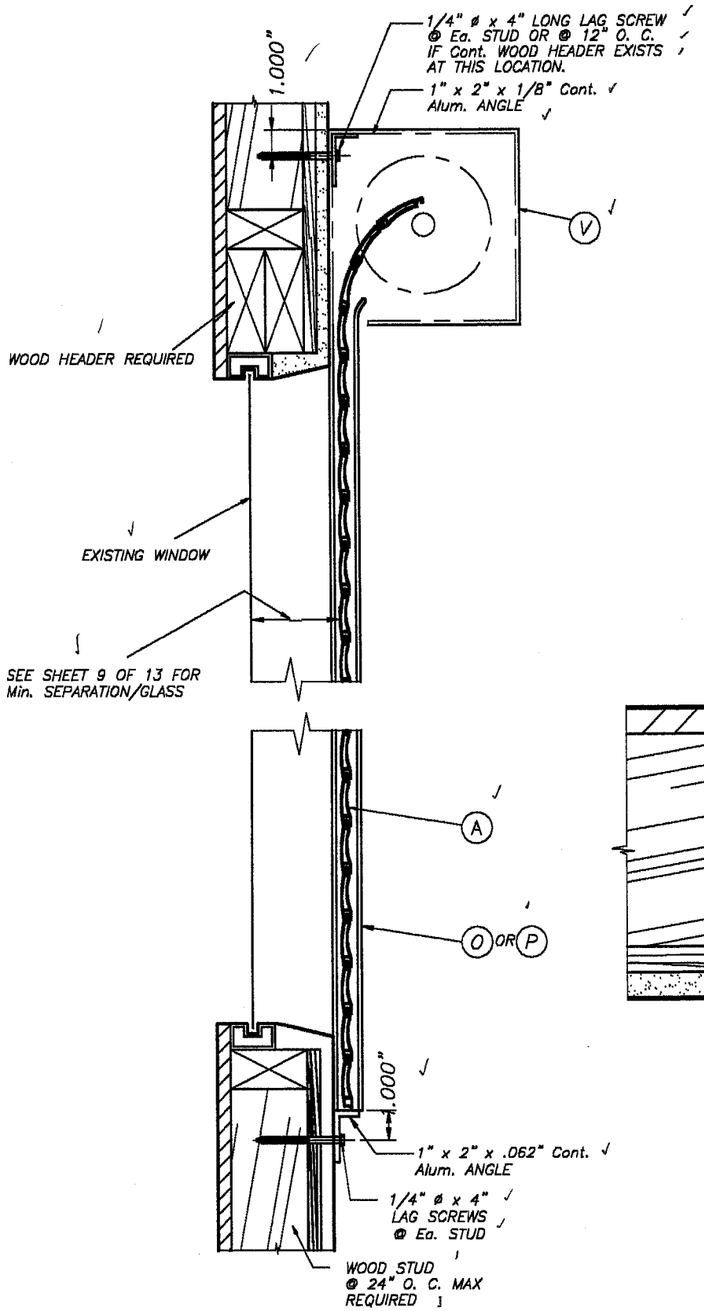

WALL MOUNTING INSTALLATION

SINGLE SPAN CONDITION

N. T. S.

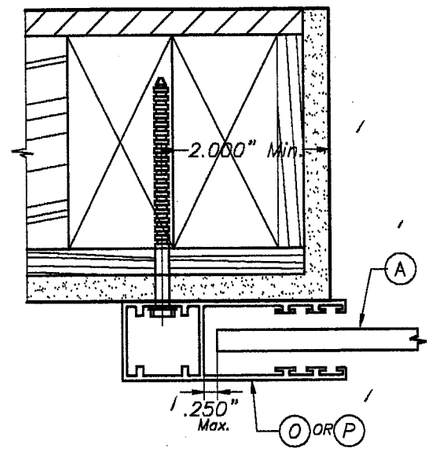

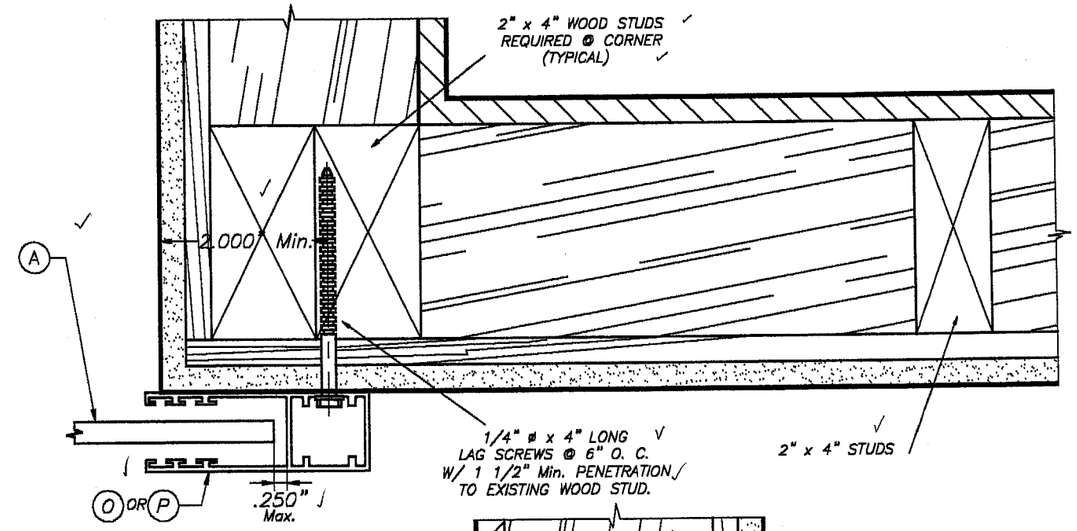

PLAN A (SECTION)

WALL MOUNT

SCALE : 3/8" = 1"

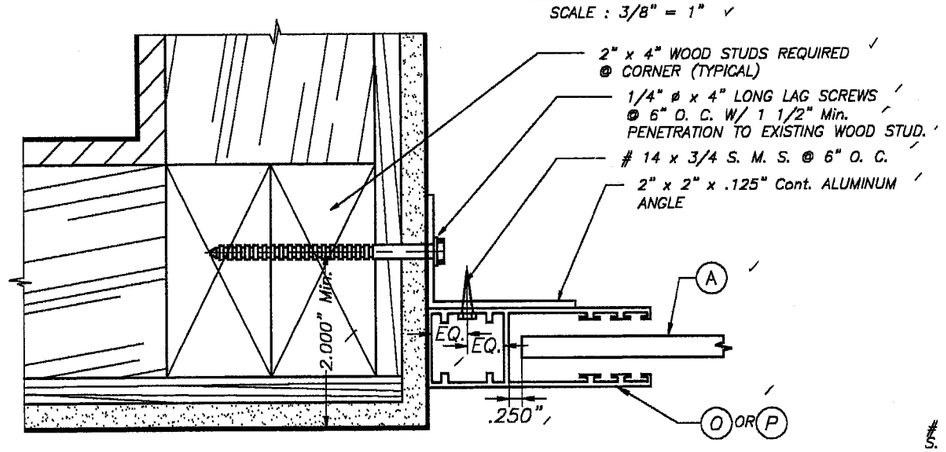

PLAN B (SECTION)

INSIDE MOUNT

SCALE : 3/8" = 1"

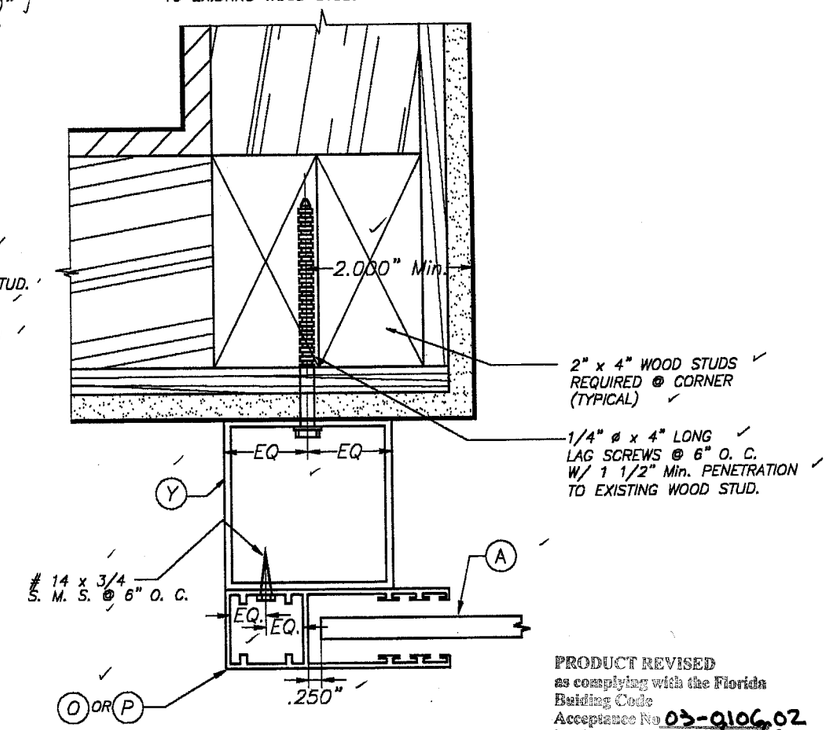

PLAN C (SECTION)

BUILD-OUT

SCALE : 3/8" = 1"

NOTES:

1. INSTALLATIONS ARE ONLY VALID FOR BUILDINGS WITH DESIGN LOAD UP TO 80 p.s.f.
2. FOR NEW FRAME CONSTRUCTION: WOOD MEMBER TO BE SOUTHERN PINE No. 2 - W/ SPECIFIC DENSITY OF 0.55 OR EQUAL.
3. MINIMUM PENETRATION OF LAG SCREWS INTO WOOD MEMBER TO BE 1 1/2".

PRODUCT REVISED
as complying with the Florida Building Code
Acceptance No. 03-0106.02
Expiration Date 03/26/08
By
Miami Dade Product Control Division

F.B.C. (H.V.H.Z.) / MIAMI-DADE COUNTY

MAY 21 2003

TILTECO INC.
TILLIT TESTING & ENGINEERING COMPANY
8595 N.W. 38th. St., Ste. 217, VIRGINIA GARDENS, Fl. 33166
Phone : (305)871-1530 . Fax : (305)871-1531
EB-0006719
WALTER A. TILLIT Jr. P. E.
FLORIDA Lic. # 44167

ROLL-UP SHUTTER

Rollac Shutters of Texas, Inc.
5331 ORANGE STREET
PEARLAND, TX 77581

REV. No	DESCRIPTION	DATE	REV. No	DESCRIPTION	DATE
1	OLD 99-134	11/12/02	3		
2	–	–	4		

AS SHOWN
SCALE

11/12/02
DATE

02-519
DRAWING No

SHEET 8 OF 13

SLAT PERFORMANCE CHART
MAXIMUM NEGATIVE DESIGN PRESSURE RATING "W" (p. s. f.) AND CORRESPONDING MAXIMUM SLAT SPAN "L" FOR TYPE 1 SLAT

(USE NEGATIVE PRESSURE VALUES AS PER ASCE 7-98)

DESIGN LOAD "W" (p.s.f.)	TYPE 1 SLAT RLL-4		
	MAXIMUM SLAT SPAN	MINIMUM SEPARATION TO GLASS	
	SINGLE & MULTIPLE UNIT	SINGLE & MULTIPLE UNIT	
		*	**
40.0	6'-0"	3 3/16"	3"
45.0	5'-11"	3 3/16"	3"
50.0	5'-8"	3 3/16"	3"
55.0	5'-6"	3 3/16"	3"
60.0	5'-4"	3 3/16"	3"
65.0	5'-2"	3 3/16"	3"
70.0.	5'-1"	3 3/16"	3"
75.0	4'-11"	3"	3"
80.0	4'-10"	3"	3"
85.0	4'-9"	3"	3"
90.0	4'-8"	3"	3"
95.0	4'-7"	3"	3"
100.0	4'-6"	3"	3"
105.0	4'-5"	3"	3"
110.0	4'-4"	3"	3"
115.0	4'-4"	3"	3"
120.0	4'-3"	3"	3"
125.0	4'-2"	3"	3"
130.0	4'-2"	3"	3"

DESIGN LOAD "W" (p.s.f.)	TYPE 1 SLAT RLL-4		
	MAXIMUM SLAT SPAN	MINIMUM SEPARATION TO GLASS	
	SINGLE & MULTIPLE UNIT	SINGLE & MULTIPLE UNIT	
		*	**
135.0	4'-1"	3"	3"
140.0	4'-0"	3"	3"
145.0	4'-0"	3"	3"
150.0	3'-11"	3"	3"
155.0	3'-11"	3"	3"
160.0	3'-10"	3"	3"
165.0.	3'-10"	3"	3"
170.0	3'-9"	3"	3"
175.0	3'-9"	3"	3"
180.0	3'-8"	3"	3"
185.0	3'-8"	3"	3"
190.0	3'-8"	3"	3"
195.0	3'-7"	3"	3"
200.0	3'-7"	3"	3"

TABLE 1: SEE NOTE BELOW.

SLAT SPAN (ft.)	MINIMUM SEPARATION TO GLASS
60" OR LESS	3"
> 60" TO 72"	3 3/16"

NOTE: MINIMUM SEPARATION TO GLASS FOR SINGLE AND MULTIPLE UNITS SHALL BE MEASURED FROM BACK OF SLAT TO GLASS.

– : NOT APPLICABLE

* MINIMUM SEPARATION TO GLASS FOR SHUTTERS INSTALLED WITHIN THE FIRST 30' ELEVATION OF BUILDING MEASURED AT BOTTOM OF SHUTTER AND MAXIMUM SPAN.
SEE TABLE 1 FOR MINIMUM SEPARATION TO GLASS FOR SPANS SHORTER THAN MAXIMUM ALLOWED.

** MINIMUM SEPARATION TO GLASS FOR SHUTTERS INSTALLED ABOVE 30' ELEVATION OF BUILDING MEASURED AT BOTTOM OF SHUTTER.

SIDE RAIL CONDITIONS FOR TYPE 1 SLAT

NOTE:

TYPE 1 SLAT SHALL ONLY BE USED IN CONJUNTION WITH TYPE 1 SIDE RAILS FOR MAXIMUM SLAT SPAN OF 60", AND A MAXIMUM DESIGN PRESSURE RATING OF 120 p.s.f.
USE TYPE 2 SIDE RAIL FOR ANY SLAT SPAN OR PRESSURE RATING INDICATED ON SCHEDULES.

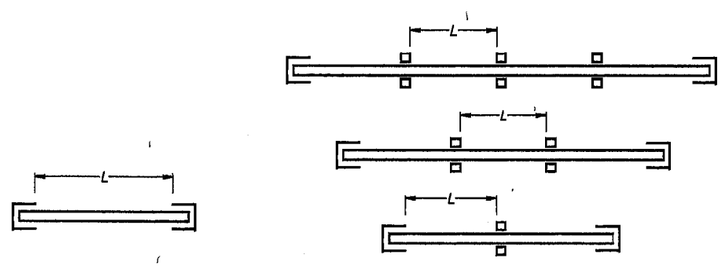

SINGLE SPAN

MULTIPLE SPAN

SPAN LAYOUT

PRODUCT REVISED
as complying with the Florida
Building Code
Acceptance No. 03-0106.02
Expiration Date 05/26/08
By
Miami Dade Product Control
Division

F.B.C. (H.V.H.Z.) / MIAMI-DADE COUNTY

MAY 21 2003

TILTECO INC.
TILLIT TESTING & ENGINEERING COMPANY
6585 N.W. 36th. St., Ste. 217, VIRGINIA GARDENS, Fl. 33166
Phone : (305)871-1530 . Fax : (305)871-1531
EB-0006719
WALTER A. TILLIT Jr. P. E.
FLORIDA Lic. # 44167

ROLL-UP SHUTTER

Rollac Shutters of Texas, Inc.
5331 ORANGE STREET
PEARLAND, TX 77581

REV. No	DESCRIPTION	DATE	REV. No	DESCRIPTION	DATE
1	OLD 99-134	11/12/02	3		
2	–	–	4		

AS SHOWN
SCALE

11/12/02
DATE

02-519
DRAWING No

SHEET 9 OF 13

STORM BAR LOADING CHART

MAXIMUM DESIGN PRESSURE RATING "W" (p. s. f.) AND CORRESPONDING MAXIMUM SPAN "L" FOR A GIVEN TYPE OF STORM BAR AND STORM BAR SPACING.

(USE NEGATIVE PRESSURE VALUES AS PER ASCE 7-98)

MAXIMUM DESIGN LOAD "W" (p.s.f.)	TYPE 1 STORM BAR 2" x 4" x .250"				TYPE 2 STORM BAR 2" x 4" x .125"				TYPE 3 STORM BAR 2" x 3" x .125"				TYPE 4 STORM BAR RLL-15 + RLL-16			
	STORM BAR SPACING *				STORM BAR SPACING *				STORM BAR SPACING *				STORM BAR SPACING *			
	≤ 3'-0"	3' TO 4'	4' TO 5'	5' TO 6'	≤ 3'-0"	3' TO 4'	4' TO 5'	5' TO 6'	≤ 3'-0"	3' TO 4'	4' TO 5'	5' TO 6'	≤ 3'-0"	3' TO 4'	4' TO 5'	5' TO 6'
30.0	10'-0"	10'-0"	10'-0"	10'-0"	9'-0"	9'-0"	9'-0"	9'-0"	8'-0"	8'-0"	8'-0"	7'-9"	5'-6"	5'-6"	5'-6"	5'-6"
35.0	10'-0"	10'-0"	10'-0"	10'-0"	9'-0"	9'-0"	9'-0"	8'-11"	8'-0"	8'-0"	7'-10"	7'-6"	5'-6"	5'-6"	5'-6"	5'-1"
40.0	10'-0"	10'-0"	10'-0"	9'-11"	9'-0"	9'-0"	9'-0"	8'-7"	8'-0"	8'-0"	7'-7"	7'-3"	5'-6"	5'-6"	5'-2"	4'-9"
45.0	10'-0"	10'-0"	10'-0"	9'-8"	9'-0"	9'-0"	8'-9"	8'-4"	8'-0"	7'-9"	7'-4"	7'-0"	5'-6"	5'-6"	4'-11"	4'-6"
50.0	10'-0"	10'-0"	9'-10"	9'-5"	9'-0"	9'-0"	8'-6"	8'-2"	8'-0"	7'-7"	7'-2"	6'-10"	5'-6"	5'-2"	4'-8"	4'-3"
55.0	10'-0"	10'-0"	9'-7"	9'-2"	9'-0"	8'-10"	8'-4"	7'-9"	7'-11"	7'-5"	7'-0"	6'-8"	5'-6"	5'-0"	4'-5"	4'-1"
60.0	10'-0"	9'-11"	9'-5"	9'-0"	9'-0"	8'-7"	8'-2"	7'-5"	7'-9"	7'-3"	6'-10"	6'-6"	5'-6"	4'-9"	4'-3"	3'-11"
65.0	10'-0"	9'-9"	9'-3"	8'-10"	9'-0"	8'-5"	7'-10"	7'-2"	7'-7"	7'-1"	6'-8"	6'-5"	5'-3"	4'-7"	4'-1"	3'-9"
70.0	10'-0"	9'-7"	9'-1"	8'-8"	8'-11"	8'-3"	7'-6"	6'-10"	7'-6"	6'-11"	6'-7"	6'-3"	5'-1"	4'-5"	3'-11"	3'-7"
75.0	10'-0"	9'-5"	8'-11"	8'-6"	8'-9"	8'-2"	7'-3"	6'-8"	7'-4"	6'-10"	6'-5"	6'-2"	4'-11"	4'-3"	3'-10"	3'-6"
80.0	9'-11"	9'-3"	8'-9"	8'-4"	8'-7"	7'-10"	7'-1"	6'-5"	7'-3"	6'-9"	6'-4"	6'-1"	4'-9"	4'-1"	3'-8"	3'-4"
85.0	9'-10"	9'-1"	8'-8"	8'-3"	8'-6"	7'-8"	6'-10"	6'-3"	7'-1"	6'-7"	6'-3"	6'-0"	4'-7"	4'-0"	3'-7"	3'-3"
90.0	9'-8"	9'-0"	8'-6"	8'-0"	8'-4"	7'-5"	6'-8"	6'-1"	7'-0"	6'-6"	6'-2"	5'-11"	4'-6"	3'-11"	3'-6"	3'-2"
95.0	9'-6"	8'-10"	8'-5"	7'-10"	8'-3"	7'-3"	6'-6"	5'-11"	6'-11"	6'-5"	6'-1"	5'-10"	4'-4"	3'-9"	3'-5"	3'-1"
100.0	9'-5"	8'-9"	8'-3"	7'-7"	8'-2"	7'-1"	6'-4"	5'-9"	6'-10"	6'-4"	6'-0"	5'-9"	4'-3"	3'-8"	3'-3"	3'-0"
105.0	9'-4"	8'-8"	8'-2"	7'-5"	7'-11"	6'-10"	6'-2"	5'-7"	6'-9"	6'-3"	5'-11"	5'-7"	4'-2"	3'-7"	3'-3"	2'-11"
110.0	9'-2"	8'-7"	7'-11"	7'-3"	7'-9"	6'-9"	6'-0"	5'-6"	6'-8"	6'-2"	5'-10"	5'-5"	4'-1"	3'-6"	3'-2"	2'-10"
115.0	9'-1"	8'-6"	7'-9"	7'-1"	7'-7"	6'-7"	5'-10"	5'-4"	6'-7"	6'-2"	5'-10"	5'-4"	4'-0"	3'-5"	3'-1"	2'-10"

* STORM BAR SPACING SHALL BE SUCH THAT MAXIMUM SLAT SPAN SHALL NOT BE EXCEEDED.

PRODUCT REVISED
as complying with the Florida
Building Code
Acceptance No. 03-0106.02
Expiration Date 05/26/08
By
Miami Dade Product Control
Division

F.B.C. (H.V.H.Z.) / MIAMI-DADE COUNTY

MAY 21 2003

TILTECO INC.
TILLIT TESTING & ENGINEERING COMPANY
8595 N.W. 36th. St., Ste. 217, VIRGINIA GARDENS, FL. 33166
Phone : (305)871-1530 , Fax : (305)871-1531
EB-0006719
WALTER A. TILLIT Jr. P. E.
FLORIDA Lic. # 44167

ROLL-UP SHUTTER

Rollac Shutters of Texas, Inc.
5331 ORANGE STREET
PEARLAND, TX 77581

REV. No	DESCRIPTION	DATE	REV. No	DESCRIPTION	DATE
1	OLD 99-134	11/12/02	3		
2	–	–	4		

AS SHOWN
SCALE

11/12/02
DATE

02-519
DRAWING No

SHEET 10 OF 13

STORM BAR LOADING CHART

MAXIMUM DESIGN PRESSURE RATING "W" (p. s. f.) AND CORRESPONDING MAXIMUM SPAN "L" FOR A GIVEN TYPE OF STORM BAR AND STORM BAR SPACING.

(USE NEGATIVE PRESSURE VALUES AS PER ASCE 7-98)

MAXIMUM DESIGN LOAD "W" (p.s.f.)	TYPE 1 STORM BAR 2" x 4" x .250"				TYPE 2 STORM BAR 2" x 4" x .125"				TYPE 3 STORM BAR 2" x 3" x .125"				TYPE 4 STORM BAR RLL-15 + RLL-16			
	STORM BAR SPACING *				STORM BAR SPACING *				STORM BAR SPACING *				STORM BAR SPACING *			
	⩽ 3'-0"	3' TO 4'	4' TO 5'	5' TO 6'	⩽ 3'-0"	3' TO 4'	4' TO 5'	5' TO 6'	⩽ 3'-0"	3' TO 4'	4' TO 5'	5' TO 6'	⩽ 3'-0"	3' TO 4'	4' TO 5'	5' TO 6'
120.0	9'-0"	8'-4"	7'-7"	6'-11"	7'-5"	6'-5"	5'-9"	5'-3"	6'-6"	6'-1"	5'-9"	5'-3"	3'-11"	3'-4"	3'-0"	2'-9"
125.0	8'-11"	8'-3"	7'-6"	6'-10"	7'-3"	6'-4"	5'-8"	5'-2"	6'-5"	6'-0"	5'-7"	5'-1"	3'-10"	3'-3"	2'-11"	2'-8"
130.0	8'-10"	8'-2"	7'-4"	6'-8"	7'-2"	6'-2"	5'-6"	5'-1"	6'-5"	5'-11"	5'-6"	5'-0"	3'-9"	3'-3"	2'-11"	2'-8"
135.0	8'-9"	8'-0"	7'-2"	6'-7"	7'-0"	6'-1"	5'-5"	4'-11"	6'-4"	5'-11"	5'-5"	4'-11"	3'-8"	3'-2"	2'-10"	2'-7"
140.0	8'-8"	7'-11"	7'-1"	6'-5"	6'-10"	5'-11"	5'-4"	4'-10"	6'-3"	5'-10"	5'-3"	4'-10"	3'-7"	3'-1"	2'-9"	2'-6"
145.0	8'-7"	7'-9"	6'-11"	6'-4"	6'-9"	5'-10"	5'-3"	4'-9"	6'-3"	5'-9"	5'-2"	4'-9"	3'-6"	3'-1"	2'-9"	2'-6"
150.0	8'-6"	7'-7"	6'-10"	6'-3"	6'-8"	5'-9"	5'-2"	4'-8"	6'-2"	5'-9"	5'-1"	4'-8"	3'-6"	3'-0"	2'-8"	2'-5"
155.0	8'-5"	7'-6"	6'-8"	6'-1"	6'-6"	5'-8"	5'-1"	4'-7"	6'-1"	5'-7"	5'-0"	4'-7"	3'-5"	2'-11"	2'-8"	2'-5"
160.0	8'-4"	7'-4"	6'-7"	6'-0"	6'-5"	5'-7"	5'-0"	4'-7"	6'-1"	5'-6"	4'-11"	4'-6"	3'-4"	2'-11"	2'-7"	2'-4"
165.0	8'-4"	7'-3"	6'-6"	5'-11"	6'-4"	5'-6"	4'-11"	4'-6"	6'-0"	5'-5"	4'-10"	4'-5"	3'-4"	2'-10"	2'-7"	2'-4"
170.0	8'-3"	7'-2"	6'-5"	5'-10"	6'-3"	5'-5"	4'-10"	4'-5"	6'-0"	5'-4"	4'-10"	4'-5"	3'-3"	2'-10"	2'-6"	2'-4"
175.0	8'-2"	7'-1"	6'-4"	5'-9"	6'-2"	5'-4"	4'-9"	4'-4"	5'-11"	5'-3"	4'-9"	4'-4"	3'-3"	2'-9"	2'-6"	2'-3"
180.0	8'-0"	6'-11"	6'-3"	5'-8"	6'-1"	5'-3"	4'-8"	4'-3"	5'-11"	5'-3"	4'-8"	4'-3"	3'-2"	2'-9"	2'-5"	2'-3"
185.0	7'-11"	6'-10"	6'-2"	5'-7"	6'-0"	5'-2"	4'-8"	4'-3"	5'-10"	5'-2"	4'-7"	4'-2"	3'-1"	2'-8"	2'-5"	2'-3"
190.0	7'-10"	6'-9"	6'-1"	5'-6"	5'-11"	5'-1"	4'-7"	4'-2"	5'-10"	5'-0"	4'-6"	4'-2"	3'-1"	2'-8"	2'-5"	2'-2"
195.0	7'-9"	6'-8"	6'-0"	5'-5"	5'-10"	5'-0"	4'-6"	4'-1"	5'-9"	5'-0"	4'-6"	4'-1"	3'-1"	2'-8"	2'-4"	2'-2"
200.0	7'-7"	6'-7"	5'-11"	5'-5"	5'-9"	5'-0"	4'-5"	4'-0"	5'-9"	4'-11"	4'-5"	4'-0"	3'-0"	2'-7"	2'-4"	2'-1"

* STORM BAR SPACING SHALL BE SUCH THAT MAXIMUM SLAT SPAN SHALL NOT BE EXCEEDED.

PRODUCT REVISED
as complying with the Florida
Building Code
Acceptance No. 03-0106.02
Expiration Date 05/26/03
By
Miami Dade Product Control
Division

F.B.C. (H.V.H.Z.) / MIAMI-DADE COUNTY

MAY 21 2003

TILTECO INC.
TILLIT TESTING & ENGINEERING COMPANY
6595 N.W. 36th. St., Ste. 217, VIRGINIA GARDENS, FL 33166
Phone : (305)871-1530 , Fax : (305)871-1531
EB-0006719
WALTER A. TILLIT Jr. P. E.
FLORIDA Lic. # 44167

ROLL-UP SHUTTER

Rollac Shutters of Texas, Inc.
5331 ORANGE STREET
PEARLAND, TX 77581

REV. No	DESCRIPTION	DATE	REV. No	DESCRIPTION	DATE
1	OLD 99-134	11/12/02	3		
2	–	–	4		

AS SHOWN
SCALE

11/12/02
DATE

02-519
DRAWING No

SHEET 11 OF 13

HEADER LOADING CHART

MAXIMUM DESIGN PRESSURE RATING "W" (p. s. f.) AND CORRESPONDING MAXIMUM SPAN "L" (Ft.) FOR A GIVEN TYPE OF HEADER AND STORM BAR HEIGHT (Ft.).

(USE NEGATIVE PRESSURE VALUES AS PER ASCE 7-98)

MAXIMUM DESIGN LOAD "W" (p.s.f.)	TYPE 1 HEADER 2" x 4" X .250"			TYPE 2 HEADER 2" x 4" X .125"		TYPE 3 HEADER 1" x 4" X .125"	
	STORM BAR HEIGHT			STORM BAR HEIGHT		STORM BAR HEIGHT	
	⩽ 7'-0"	7' TO 9'	9' TO 10'	⩽ 5'-0"	5' TO 8'	⩽ 5'-0"	5' TO 7'
30.0	15'-1"	14'-2"	13'-2"	12'-0"	12'-0"	7'-1"	6'-6"
35.0	14'-6"	13'-7"	12'-5"	12'-0"	11'-11"	6'-10"	6'-3"
40.0	14'-0"	13'-2"	11'-8"	12'-0"	11'-2"	6'-7"	6'-1"
45.0	13'-7"	12'-8"	11'-0"	12'-0"	10'-6"	6'-5"	5'-11"
50.0	13'-3"	12'-0"	10'-5"	12'-0"	9'-11"	6'-3"	5'-9"
55.0	12'-11"	11'-5"	9'-11"	12'-0"	9'-6"	6'-1"	5'-7"
60.0	12'-5"	11'-0"	9'-6"	11'-6"	9'-1"	5'-11"	5'-6"
65.0	11'-11"	10'-6"	9'-1"	11'-1"	8'-9"	5'-10"	5'-4"
70.0	11'-6"	10'-2"	8'-9"	10'-8"	8'-5"	5'-9"	5'-3"
75.0	11'-1"	9'-10"	8'-6"	10'-3"	8'-2"	5'-8"	5'-2"
80.0	10'-9"	9'-6"	8'-3"	9'-11"	7'-10"	5'-6"	5'-1"
85.0	10'-5"	9'-3"	8'-0"	9'-8"	7'-8"	5'-5"	5'-0"
90.0	10'-2"	8'-11"	7'-9"	9'-5"	7'-5"	5'-5"	4'-11"
95.0	9'-11"	8'-9"	7'-7"	9'-2"	7'-3"	5'-4"	4'-11"
100.0	9'-8"	8'-6"	7'-4"	8'-11"	7'-0"	5'-3"	4'-10"
105.0	9'-5"	8'-3"	7'-2"	8'-8"	6'-10"	5'-2"	4'-9"
110.0	9'-2"	8'-1"	7'-0"	8'-6"	6'-9"	5'-1"	4'-8"
115.0	9'-0"	7'-11"	6'-10"	8'-4"	6'-7"	5'-1"	4'-7"

MAXIMUM DESIGN LOAD "W" (p.s.f.)	TYPE 1 HEADER 2" x 4" X .250"			TYPE 2 HEADER 2" x 4" X .125"		TYPE 3 HEADER 1" x 4" X .125"	
	STORM BAR HEIGHT			STORM BAR HEIGHT		STORM BAR HEIGHT	
	⩽ 7'-0"	7' TO 9'	9' TO 10'	⩽ 5'-0"	5' TO 8'	⩽ 5'-0"	5' TO 7'
120.0	8'-9"	7'-9"	6'-9"	8'-2"	6'-5"	5'-0"	4'-6"
125.0	8'-7"	7'-7"	6'-7"	8'-0"	6'-4"	4'-11"	4'-5"
130.0	8'-5"	7'-5"	6'-5"	7'-10"	6'-2"	4'-11"	4'-4"
135.0	8'-3"	7'-4"	6'-4"	7'-8"	6'-1"	4'-10"	4'-3"
140.0	8'-2"	7'-2"	6'-3"	7'-6"	5'-11"	4'-10"	4'-2"
145.0	8'-0"	7'-1"	6'-1"	7'-5"	5'-10"	4'-9"	4'-1"
150.0	7'-10"	6'-11"	6'-0"	7'-3"	5'-9"	4'-9"	4'-1"
155.0	7'-9"	6'-10"	5'-11"	7'-2"	5'-8"	4'-8"	4'-0"
160.0	7'-7"	6'-9"	5'-10"	7'-0"	5'-7"	4'-8"	3'-11"
165.0	7'-6"	6'-7"	5'-9"	6'-11"	5'-6"	4'-7"	3'-10"
170.0	7'-5"	6'-6"	5'-8"	6'-10"	5'-5"	4'-6"	3'-10"
175.0	7'-3"	6'-5"	5'-7"	6'-9"	5'-4"	4'-5"	3'-9"
180.0	7'-2"	6'-4"	5'-6"	6'-8"	5'-3"	4'-4"	3'-8"
185.0	7'-1"	6'-3"	5'-5"	6'-7"	5'-2"	4'-4"	3'-8"
190.0	7'-0"	6'-2"	5'-4"	6'-6"	5'-1"	4'-3"	3'-7"
195.0	6'-11"	6'-1"	5'-3"	6'-5"	5'-1"	4'-2"	3'-7"
200.0	6'-10"	6'-0"	5'-2"	6'-4"	5'-0"	4'-2"	3'-6"

PRODUCT REVISED
as complying with the Florida
Building Code
Acceptance No. 03-0106.02
Expiration Date 05/26/07
By
Miami Dade Product Control
Division

F.B.C. (H.V.H.Z.) / MIAMI-DADE COUNTY

MAY 21 2003

TILTECO INC.
TILLIT TESTING & ENGINEERING COMPANY
8395 N.W. 36th. St., Ste. 217, VIRGINIA GARDENS, FL 33166
Phone : (305)871-1530 , Fax : (305)871-1531
EB-0006719
WALTER A. TILLIT Jr. P. E.
FLORIDA Lic. # 44167

ROLL-UP SHUTTER

Rollac Shutters of Texas, Inc.
5331 ORANGE STREET
PEARLAND, TX 77581

REV. No	DESCRIPTION	DATE	REV. No	DESCRIPTION	DATE
1	OLD 98-134	11/12/02	3		
2	–	–	4		

AS SHOWN
SCALE

11/12/02
DATE

02-519
DRAWING No

SHEET 12 OF 13

MULLION LOADING CHART

MAXIMUM DESIGN PRESSURE RATING "W" (p. s. f.) AND CORRESPONDING MAXIMUM SPAN "L"(Ft) FOR A GIVEN TYPE OF MULLION AND MULLION SPACING (Ft.).

(USE NEGATIVE PRESSURE VALUES AS PER ASCE 7-98)

MAXIMUM DESIGN LOAD "W" (p.s.f.)	TYPE 1 MULLION 4" x 6" x .188"			TYPE 2 MULLION 3" x 4" x .125"			TYPE 3 MULLION 2" x 3" x .125"		
	MULLION SPACING			MULLION SPACING			MULLION SPACING		
	≤ 4'-0"	4' TO 5'	5' TO 8'	≤ 4'-0"	4' TO 5'	5' TO 8'	≤ 3'-0"	3' TO 4'	4' TO 5'
30.0	12'-0"	12'-0"	12'-0"	9'-0"	9'-0"	9'-0"	7'-10"	7'-2"	6'-7"
35.0	12'-0"	12'-0"	12'-0"	9'-0"	9'-0"	9'-0"	7'-5"	6'-9"	6'-3"
40.0	12'-0"	12'-0"	12'-0"	9'-0"	9'-0"	8'-10"	7'-2"	6'-6"	6'-0"
45.0	12'-0"	12'-0"	12'-0"	8'-8"	9'-0"	8'-4"	6'-10"	6'-3"	5'-9"
50.0	12'-0"	12'-0"	12'-0"	8'-4"	8'-11"	7'-11"	6'-7"	6'-0"	5'-7"
55.0	12'-0"	12'-0"	12'-0"	8'-1"	8'-7"	7'-6"	6'-5"	5'-10"	5'-5"
60.0	12'-0"	12'-0"	11'-11"	7'-10"	8'-4"	7'-3"	6'-3"	5'-8"	5'-3"
65.0	12'-0"	12'-0"	11'-8"	7'-8"	8'-2"	6'-11"	6'-0"	5'-6"	5'-1"
70.0	12'-0"	12'-0"	11'-4"	7'-5"	7'-11"	6'-8"	5'-11"	5'-4"	5'-0"
75.0	12'-0"	12'-0"	11'-1"	7'-3"	7'-9"	6'-5"	5'-9"	5'-3"	4'-11"
80.0	11'-10"	12'-0"	10'-10"	7'-2"	7'-7"	6'-3"	5'-8"	5'-2"	4'-9"
85.0	11'-8"	12'-0"	10'-8"	7'-0"	7'-5"	6'-1"	5'-7"	5'-0"	4'-8"
90.0	11'-5"	12'-0"	10'-5"	6'-9"	7'-4"	5'-11"	5'-5"	4'-11"	4'-7"
95.0	11'-3"	12'-0"	10'-1"	6'-7"	7'-2"	5'-9"	5'-4"	4'-10"	4'-6"
100.0	11'-1"	11'-9"	9'-10"	6'-5"	7'-1"	5'-7"	5'-3"	4'-9"	4'-5"
105.0	10'-11"	11'-7"	9'-7"	6'-3"	6'-11"	5'-5"	5'-2"	4'-8"	4'-4"
110.0	10'-9"	11'-5"	9'-5"	6'-2"	6'-9"	5'-4"	5'-1"	4'-7"	4'-4"
115.0	10'-7"	11'-3"	9'-2"	6'-0"	6'-7"	5'-3"	5'-0"	4'-7"	4'-3"
120.0	10'-4"	11'-1"	9'-0"	5'-10"	6'-5"	5'-1"	4'-11"	4'-6"	4'-2"
125.0	10'-2"	10'-11"	8'-10"	5'-9"	6'-4"	5'-0"	4'-11"	4'-5"	4'-1"
130.0	9'-11"	10'-10"	8'-8"	5'-8"	6'-2"	4'-11"	4'-10"	4'-4"	4'-1"
135.0	9'-9"	10'-8"	8'-6"	5'-7"	6'-1"	4'-10"	4'-9"	4'-4"	4'-0"
140.0	9'-7"	10'-6"	8'-4"	5'-6"	6'-0"	4'-9"	4'-8"	4'-3"	4'-0"
145.0	9'-5"	10'-4"	8'-2"	5'-5"	5'-10"	4'-8"	4'-8"	4'-3"	3'-11"
150.0	9'-3"	10'-2"	8'-1"	5'-4"	5'-9"	4'-7"	4'-7"	4'-2"	3'-10"
155.0	9'-1"	10'-0"	7'-11"	5'-3"	5'-8"	4'-6"	4'-6"	4'-1"	3'-10"
160.0	8'-11"	9'-10"	7'-9"	5'-2"	5'-7"	4'-5"	4'-6"	4'-1"	3'-9"
165.0	8'-10"	9'-8"	7'-8"	5'-1"	5'-6"	4'-4"	4'-5"	4'-0"	3'-9"
170.0	8'-8"	9'-7"	7'-7"	5'-0"	5'-5"	4'-3"	4'-5"	4'-0"	3'-9"
175.0	8'-7"	9'-5"	7'-5"	4'-11"	5'-4"	4'-3"	4'-4"	4'-0"	3'-8"
180.0	8'-5"	9'-3"	7'-4"	4'-10"	5'-3"	4'-2"	4'-4"	3'-11"	3'-8"
185.0	8'-4"	9'-2"	7'-3"	4'-9"	5'-2"	4'-1"	4'-3"	3'-11"	3'-7"
190.0	8'-3"	9'-0"	7'-2"	4'-8"	5'-2"	4'-1"	4'-3"	3'-10"	3'-7"
195.0	8'-1"	8'-11"	7'-1"	4'-7"	5'-1"	4'-0"	4'-2"	3'-10"	3'-7"
200.0	8'-0"	8'-10"	7'-0"	4'-7"	5'-0"	3'-11"	4'-2"	3'-9"	3'-6"

SIDE RAIL ANCHOR SCHEDULE

MAXIMUM DESIGN PRESSURE RATING "W" (p.s.f.) AND CORRESPONDING MAXIMUM ANCHOR (In) SCHEDULE FOR SIDE RAILS (O) & (P) CONNECTION TO C.B.S. OR CONCRETE

MAXIMUM DESIGN LOAD "W" (p.s.f.)	(O)*			(P)		
	WALL MOUNT	SIDE WALL MOUNT	& BUILD-OUT MOUNT	WALL MOUNT	SIDE WALL MOUNT	& BUILD-OUT MOUNT
80.0 OR LESS	4 1/2"	5"	6"	5 1/2"	4 1/2"	6"
	6"	6"	6"	6"	6"	6"
>80.0 TO 150.0*	3"	3 1/2"	6"	3"	3"	5 1/2"
	6"	6"	6"	6"	6"	6"
>150.0 TO 200.0	–	–	–	2 1/2"	2 1/2"	4 1/2"
	–	–	–	6"	6"	6"

* TYPE 1 SIDE RAIL (O) SHALL ONLY BE USED UP TO 120 p.s.f. DESIGN LOADS

MASONRY
POURED CONCRETE

SUBSTRATE LEGEND

MAXIMUM ANCHOR SPACING (In.) AT SIDE RAILS VERSUS EDGE DISTANCE = E. D.

MAXIMUM SIDE RAILS ANCHORS SPACINGS SHOWN ON SHEET 4 OF 13 ARE VALID FOR 3 1/2" EDGE DISTANCE. FOR E. D. LESS THAN 3 1/2", REDUCE ANCHOR SPACING BY MULTIPLYING SPACINGS SHOWN ON THAT SHEET BY THE FOLLOWING FACTORS.

ACTUAL E. D.= EDGE DISTANCE	FACTOR
3 1/2"	1.0
3"	.86
2 1/2"	.71
2"	.50

THIS SPACING REDUCTION SHALL ONLY BE PERFORMED FOR SPACINGS ON SCHEDULE EQUAL OR GREATER THAN 4" O.C.

NOTES : REFER TO ELEVATIONS ON SHEET 1 OF 13

1-. FOR MULLIONS INSTALLED W/O STORM BARS

A) MULLION SPACING SHALL BE SUCH THAT MAXIMUM SLAT SPAN SHALL NOT BE EXCEEDED

2-. FOR MULLIONS INSTALLED W/ STORM BARS & HEADERS

A) MULLION SPACING SHALL BE SUCH THAT MAXIMUM HEADER SPAN SHALL NOT BE EXCEEDED

B) STORM BAR SPACING SHALL BE SUCH THAT MAXIMUM SLAT SPAN SHALL NOT BE EXCEEDED

PRODUCT REVISED
as complying with the Florida Building Code
Acceptance No 03-0106.02
Expiration Date 05/26/08
By
Miami Dade Product Control Division

MAY 21 2003

F.B.C. (H.V.H.Z.) / MIAMI-DADE COUNTY

TILTECO INC.
TILLIT TESTING & ENGINEERING COMPANY
6595 N.W. 36th. St., Ste. 217, VIRGINIA GARDENS, Fl. 33166
Phone : (305)871-1630 . Fax : (305)871-1531
EB-0006719
WALTER A. TILLIT Jr. P. E.
FLORIDA Lic. # 44167

ROLL-UP SHUTTER

Rollac Shutters of Texas, Inc.
5331 ORANGE STREET
PEARLAND, TX 77581

REV. No	DESCRIPTION	DATE	REV. No	DESCRIPTION	DATE
1	OLD 99-134	11/12/02	3		
2	–	–	4		

AS SHOWN SCALE

11/12/02 DATE

02-519 DRAWING No

SHEET 13 OF 13