MIAMI-DADE

**BUILDING CODE COMPLIANCE OFFICE (BCCO)**
**PRODUCT CONTROL DIVISION**

**MIAMI-DADE** COUNTY, FLORIDA
METRO-DADE FLAGLER BUILDING
**140 WEST FLAGLER STREET, SUITE 1603**
MIAMI, FLORIDA 33130-1563
(305) 375-2901 FAX (305) 375-2908

# NOTICE OF ACCEPTANCE (NOA)

**Homeshield Industries, Inc.**
**3585 E. 10th Court.**
**Hialeah, FL 33013**

## SCOPE:

This NOA is being issued under the applicable rules and regulations governing the use of construction materials. The documentation submitted has been reviewed by Miami-Dade County Product Control Division and accepted by the Board of Rules and Appeals (BORA) to be used in Miami Dade County and other areas where allowed by the Authority Having Jurisdiction (AHJ).

This NOA shall not be valid after the expiration date stated below. The Miami-Dade County Product Control Division (In Miami Dade County) and/or the AHJ (in areas other than Miami Dade County) reserve the right to have this product or material tested for quality assurance purposes. If this product or material fails to perform in the accepted manner, the manufacturer will incur the expense of such testing and the AHJ may immediately revoke, modify, or suspend the use of such product or material within their jurisdiction. BORA reserves the right to revoke this acceptance, if it is determined by Miami-Dade County Product Control Division that this product or material fails to meet the requirements of the applicable building code.
This product is approved as described herein, and has been designed to comply with the High Velocity Hurricane Zone of the Florida Building Code.

**DESCRIPTION: Extruded Aluminum 63mm Roll-Up Shutter**

**APPROVAL DOCUMENT:** Drawing No. 02-530, titled "63mm Extruded Roll-Up Shutters", prepared by Tilteco, Inc. dated 11/11/02, with last revision on 11/11/02, sheets 1 through 14 of 16 bearing the Miami-Dade County Product Control Revision stamp with the Notice of Acceptance number and expiration date by the Miami-Dade County Product Control Division.

**MISSILE IMPACT RATING: Large and Small Missile Impact**

**LABELING:** Each unit shall bear a permanent label with the manufacturer's name or logo, city, state and the following statement: "Miami-Dade County Product Control Approved", unless otherwise noted herein.

**RENEWAL** of this NOA shall be considered after a renewal application has been filed and there has been no change in the applicable building code negatively affecting the performance of this product.

**TERMINATION** of this NOA will occur after the expiration date or if there has been a revision or change in the materials, use, and/or manufacture of the product or process. Misuse of this NOA as an endorsement of any product, for sales, advertising or any other purposes shall automatically terminate this NOA. Failure to comply with any section of this NOA shall be cause for termination and removal of NOA.

**ADVERTISEMENT:** The NOA number preceded by the words Miami-Dade County, Florida, and followed by the expiration date may be displayed in advertising literature. If any portion of the NOA is displayed, then it shall be done in its entirety.

**INSPECTION:** A copy of this entire NOA shall be provided to the user by the manufacturer or its distributors and shall be available for inspection at the job site at the request of the Building Official.
This NOA **revises NOA # 00-1207.02** and consists of this page 1 as well as approval document mentioned above.
The submitted documentation was reviewed by **Candido F. Font, P.E.**

8/21/03

PRODUCT CONTROL ACCEPTED

**NOA No 03-0106.09**
**Expiration Date: April 30, 2006**
**Approval Date: August 21,2003**
**Page 1**

**Homeshield Industries, Inc.**

## NOTICE OF ACCEPTANCE: EVIDENCE SUBMITTED

(For File ONLY. Not part of NOA)

**A. DRAWING**

1. Drawing No. 02-530, "63 mm Extruded Roll-Up Shutters", Sheets 1 through 14 of 14, prepared by Tilteco, Inc., dated 11/11/02, with last revision on 11/11/02, signed and sealed by Walter Tillit Jr., PE.

**B. TEST**

1. Test report on Uniform Static Air Pressure Test per PA 202 of extruded aluminum roll-up shutters, prepared by Hurricane Engineering & Testing, Inc., Report No. HETI 97-664, dated 09/17/97 signed and sealed by A. Viquar, PE.
2. Test report on Large Missile Impact Test per PA 201, Cyclic Wind Pressure Test per PA 203 and Uniform Static Air Pressure Test per PA 202, of extruded aluminum roll-up shutter, prepared by Hurricane Engineering & Testing, Inc., Report No. HETI 97-656 & 658, dated 08/26/97 & 08/28/97, signed and sealed by H. M. Medina, PE.
3. Test report on Large Missile Impact Test per PA 201of extruded aluminum roll-up shutter, prepared by Hurricane Engineering & Testing, Inc., Report No. HETI 97-627(Revised) & 681, from 05/09/97 to 07/17/97, signed and sealed by H. M. Medina, PE.
4. Test report on Large Missile Impact Test per PA 201 and Cyclic Wind Pressure Test per PA 203 of extruded aluminum roll-up shutter, prepared by Hurricane Engineering & Testing, Inc., Report No. 97-667, 668, 676 & 679, dated from 09/26/97 to 10/20/97, signed and sealed by H. M. Medina, PE.

**C. CALCULATIONS**

1. Comparative analysis for slats; storm bars, headers and anchors using rational analysis dated 02/09/98, pages 1 through 79 of 79, prepared by Tilteco Inc., signed and sealed by W. A. Tillit Jr., PE.

**D. MATERIAL CERTIFICATION**

1. Die Drawings prepared by Werner Co. drawing No. 79746, 47, & 48, dated 05/17/97 & 09/09/96 and signed by B. Stamper
2. Die drawing prepared by Werner Co. drawing No. 79730 & 31, dated 05/17/97 to 10/11/96 and signed by B. Stamper.
3. Tensile Test Report No HETI 97-T57, per ASTM E8, prepared by Hurricane Engineering & Testing, Inc. dated 10/21/97, signed and sealed by H. M. Medina, PE.

**E. STATEMENTS**

1. Letter of No Change issued by Homeshield Industries, Inc., on 11/30/200, signed and sealed by J. D. Nickel.
2. Letter of identical drawing but Note on 1 of 14 issued by Tilteco, Inc on 07/25/03 signed and sealed by W. A. Tillit Jr. PE.

**Candido F. Font, P. E.**
**Senior Product Control Examiner**
**NOA No 03-0106.09**
**Expiration Date: April 30, 2006**
**Approval Date: August 21, 2003**

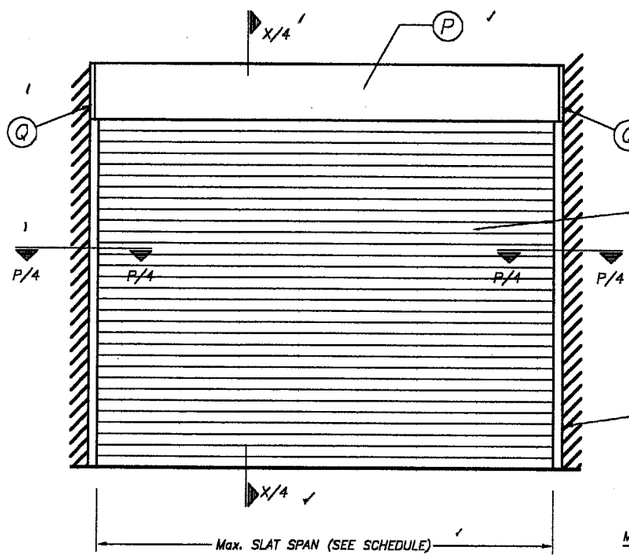


**TYPICAL SINGLE UNIT ELEVATION (NO STORM BARS REQUIRED)**

NOTE: SEE SHEET 2 & 3 OF 14 FOR COMPONENTS NOMENCLATURE.

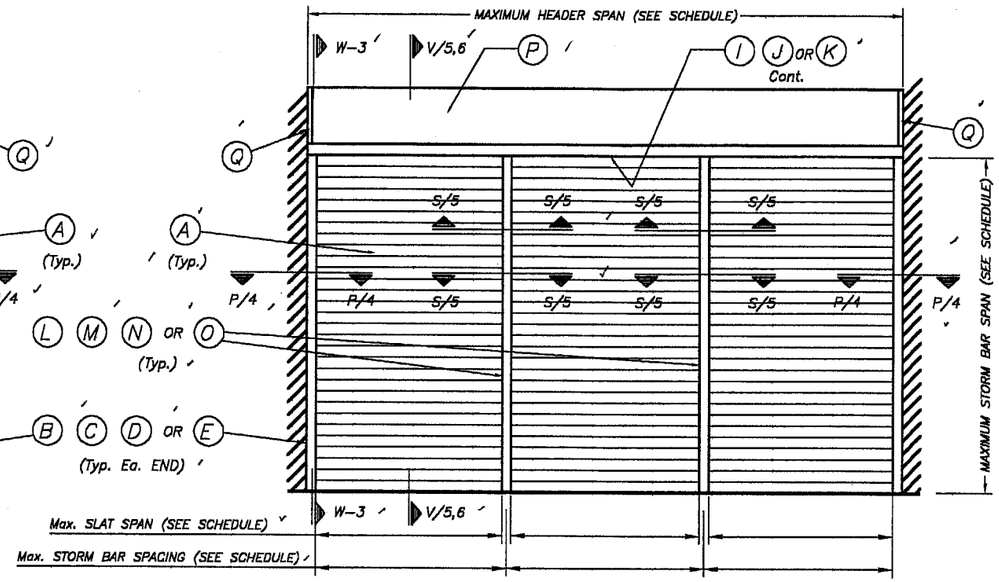


**TYPICAL MULTIPLE UNIT ELEVATION (STORM BARS REQUIRED)**

NOTE: SEE SHEET 2 & 3 OF 14 FOR COMPONENTS NOMENCLATURE.

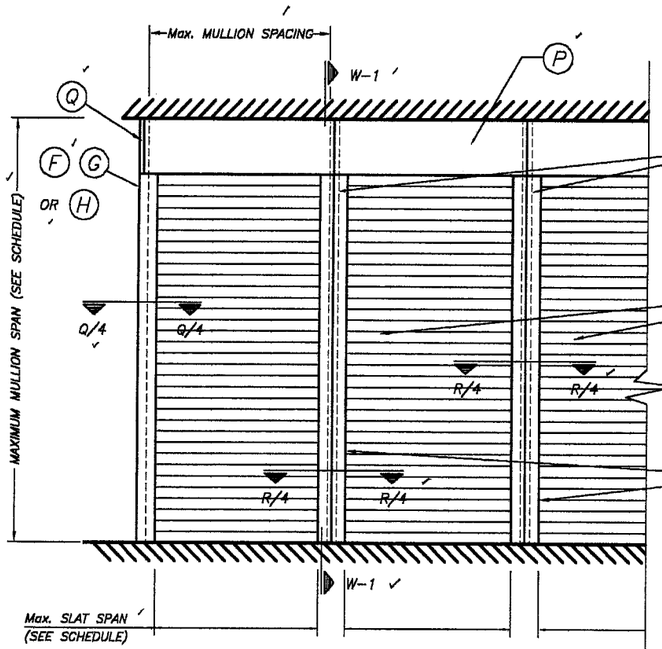


**TYPICAL CONSECUTIVE SINGLE UNIT ELEVATION (NO STORM BARS REQUIRED)**

NOTE: SEE SHEET 2 & 3 OF 14 FOR COMPONENTS NOMENCLATURE.

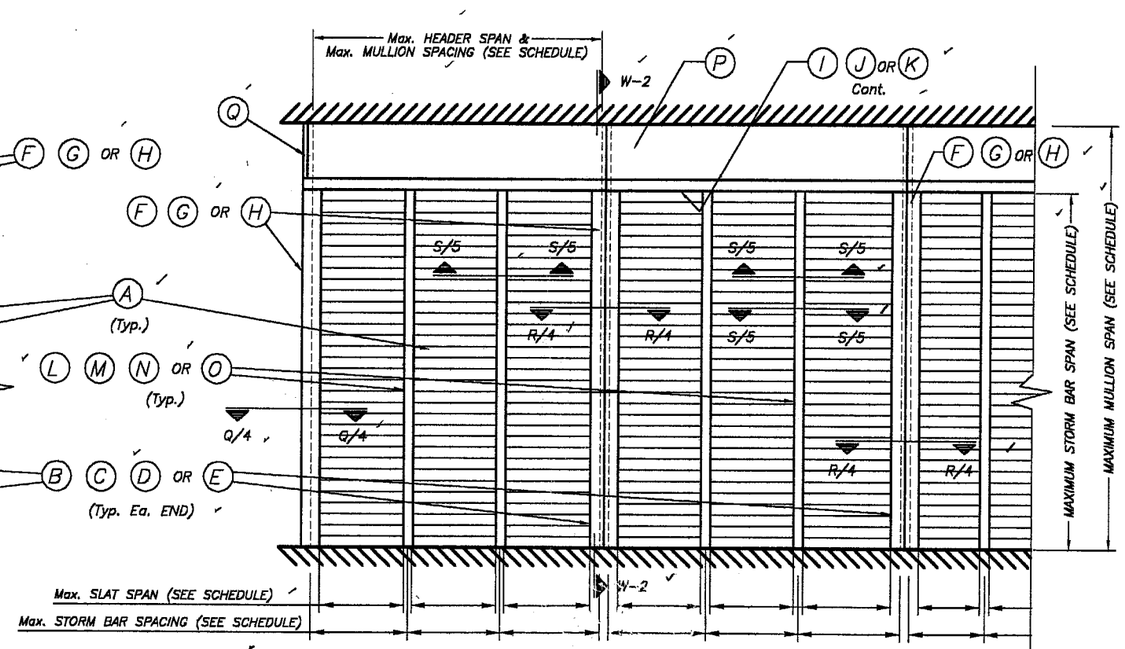


**TYPICAL CONSECUTIVE MULTIPLE UNIT ELEVATION (STORM BARS REQUIRED)**

NOTE: SEE SHEET 2 & 3 OF 14 FOR COMPONENTS NOMENCLATURE.

## GENERAL NOTES:

1. ROLL-UP SHUTTERS SHOWN ON THIS PRODUCT APPROVAL DOCUMENT HAS BEEN DESIGNED IN ACCORDANCE WITH THE 2001 EDITION OF THE FLORIDA BUILDING CODE. DESIGN WIND LOADS SHALL BE DETERMINED AS PER SECTION 1619 OF THE ABOVE MENTIONED CODE, FOR A BASIC WIND SPEED OF 146 m.p.h., AND IN ACCORDANCE W/ ASCE 7-98 STANDARD.
ROLL-UP SHUTTER'S ADEQUACY FOR IMPACT AND FATIGUE RESISTANCE HAS BEEN VERIFIED IN ACCORDANCE WITH SECTION 1606.1.4 OF THE ABOVE MENTIONED CODE AS PER HETI TESTING LAB. REPORTS # 97-757, 97-627, 97-656, 97-658, 97-664, 97-667, 97-668, 97-676, 97-679 & 97-681.

2. ALL ALUMINUM EXTRUSIONS SHALL BE 6063-T6 ALLOY (UNLESS OTHERWISE NOTED).

3. ALL SCREWS TO BE STAINLESS STEEL 304 OR 316 SERIES W/50 ksi YIELD POINT AND 90 ksi TENSILE STRENGTH.

4. BOLTS TO BE 2024-T4 ALUMINUM ALLOY, GALVANIZED OR STAINLESS STEEL WITH 36 ksi MINIMUM YIELD POINT.

5. STORM BARS SHALL REMAIN IN PLACE AT ALL TIMES.

6. ANCHORS TO WALL SHALL BE AS FOLLOWS: (UNLESS OTHERWISE NOTED)
(A) TO EXISTING POURED CONCRETE: (f'c = 3000 psi Min.)
- 1/4" ø TAPCON ANCHORS OR MAXI-SET TAPCON ANCHORS, AS MANUFACTURED BY I.T.W./RAMSET OR ELCO INDUSTRIES, INC.

NOTES:
A.1) MINIMUM EMBEDMENT OF CONCRETE ANCHORS INTO THE CONCRETE UNIT SHALL BE 1 3/4". NO EMBEDMENT INTO STUCCO SHALL BE CONSIDERED AS PART OF THE REQUIRED EMBEDMENT.

A.2) IN CASE THAT PRECAST STONE, PRECAST CONCRETE PANELS, OR PAVERS BE FOUND ON THE EXISTING WALL OR FLOOR, ANCHORS SHALL BE LONG ENOUGH TO REACH THE MAIN STRUCTURE BEHIND SUCH PANELS. MINIMUN PENETRATION SHALL BE 1 3/4".

(B) TO EXISTING CONCRETE BLOCK WALL:
- 1/4" ø TAPCON ANCHORS OR MAXI-SET TAPCON ANCHORS, AS MANUFACTURED BY I.T.W./RAMSET OR ELCO INDUSTRIES, INC.

NOTES:
B.1) MINIMUM EMBEDMENT OF TAPCON ANCHORS OR MAXI-SET TAPCON ANCHORS, INTO THE CONCRETE BLOCK UNIT SHALL BE 1 1/4".

B.2) IN CASE THAT PRECAST STONE OR PRECAST CONCRETE PANELS BE FOUND ON THE EXISTING WALL, ANCHORS SHALL BE LONG ENOUGH TO REACH THE MAIN STRUCTURE BEHIND SUCH PANELS. ANCHORAGE SHALL BE 1 1/4" MINIMUM.

(C) ANCHORS SHALL BE INSTALLED FOLLOWING ALL OF THE RECOMENDATIONS AND SPECIFICATIONS OF THE ANCHOR'S MANUFACTURER.

7. IT SHALL BE THE RESPONSIBILITY OF THE CONTRACTOR TO VERIFY THE SOUNDNESS OF THE STRUCTURE WHERE SHUTTER IS TO BE ATTACHED TO INSURE PROPER ANCHORAGE.

8. SHUTTER MANUFACTURER'S STAMP SHALL BE PLACED ON THE EXPOSED SURFACE OF THE SIDE RAIL APROXIMATELY 4" ABOVE THE BOTTOM OF SUCH RAIL.
STAMP SHALL READ AS FOLLOWS:
ROLL-UP SHUTTER
HOMESHIELD INDUSTRIES, INC.
HIALEAH, FLORIDA
MIAMI-DADE COUNTY PRODUCT CONTROL APPROVED.

9. ROLL-UP MECHANISM NOT PART OF THIS APPROVAL. ~~BUT SHALL BE~~ CERTIFIED BY AN INDEPENDENT TESTING AGENCY

10. (A) THIS PRODUCT APPROVAL DOCUMENT (P.A.D.) PREPARED BY THIS ENGINEER IS GENERIC AND DOES NOT PROVIDE INFORMATION FOR A SITE SPECIFIC PROJECT; i.e. WHERE THE SITE CONDITIONS DEVIATE FROM THE P.A.D.

(B) CONTRACTOR TO BE RESPONSIBLE FOR THE SELECTION, PURCHASE AND INSTALLATION INCLUDING LIFE SAFETY OF THIS PRODUCT BASED ON THIS PRODUCT APPROVAL PROVIDED HE/SHE DOES NOT DEVIATE FROM THE CONDITIONS DETAILED ON THIS DOCUMENT. CONSTRUCTION SAFETY AT SITE IS THE CONTRACTOR'S RESPONSIBILITY.

(C) THIS PRODUCT APPROVAL DOCUMENT WILL BE CONSIDERED INVALID IF MODIFIED.

(D) SITE SPECIFIC PROJECTS SHALL BE PREPARED BY A FLORIDA REGISTERED ENGINEER OR ARCHITECT WHICH WILL BECOME THE PROFESSIONAL OF RECORD (P.O.R) FOR THE PROJECT AND WHO WILL BE RESPONSIBLE FOR THE PROPER USE OF THE P.A.D.

(E) THIS P.A.D. SHALL COMPLY WITH SECTION 2: 61G15 OF THE FLORIDA ADMINISTRATIVE CODE.

PRODUCT REVISED
as complying with the Florida
Building Code
Acceptance No. 03-0106.09
Expiration Date 04/30/06
By
Miami Dade Product Control
Division

F.B.C.(H.V.H.Z.)/MIAMI-DADE COUNTY

JUL 29 2003

TILTECO INC.
TILLIT TESTING & ENGINEERING COMPANY
6595 N.W. 36th. St., Ste. 217, VIRGINIA GARDENS, FL 33166
Phone : (305)871-1530 . Fax : (305)871-1531
EB-0006719
WALTER A. TILLIT Jr., P. E.
FLORIDA Lic. # 44167

63 mm EXTRUDED ROLL-UP SHUTTER

**HOMESHIELD INDUSTRIES, INC.**
3585 E. 10th. COURT
HIALEAH, FLORIDA 33013

| REV. No | DESCRIPTION | DATE | REV. No | DESCRIPTION | DATE |
|---|---|---|---|---|---|
| 1 | OLD 97-245 | 11/11/02 | 3 | | |
| 2 | - | - | 4 | | |

SCALE: -
DATE: 11/11/02
DRAWING No: 02-530
SHEET 1 OF 14

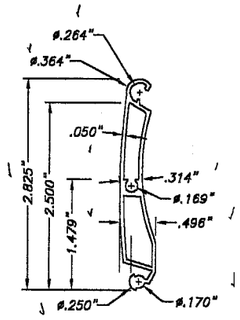


Ⓐ TYPE 1 SLAT
EXTRUDED ALUMINUM SLAT
6063–T6 Alum. ALLOY
SCALE: 1/2" = 1"

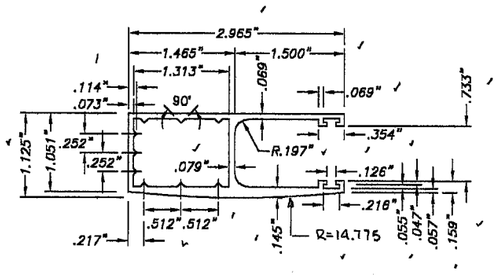


Ⓑ TYPE 1
SIDE RAILS:
6063–T6 Alum. ALLOY
SCALE: 1/2" = 1"

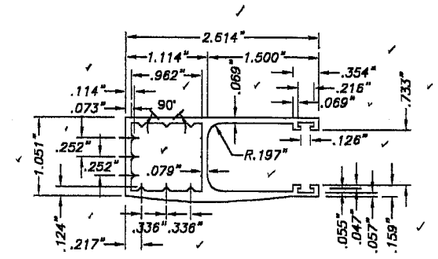


Ⓒ TYPE 2
SIDE RAILS:
6063–T6 Alum. ALLOY
SCALE: 1/2" = 1"

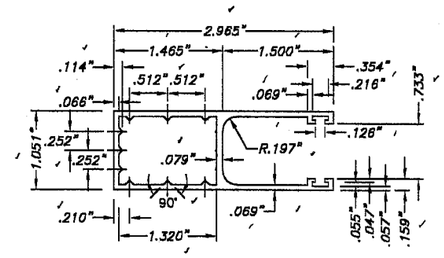


Ⓓ TYPE 3
SIDE RAILS:
6063–T6 Alum. ALLOY
SCALE: 1/2" = 1"

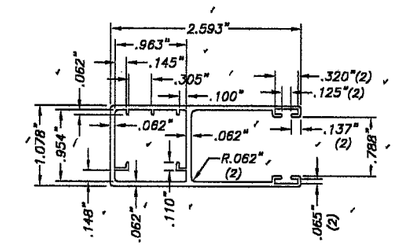


Ⓔ TYPE 4
SIDE RAILS:
6063–T6 Alum. ALLOY
SCALE: 1/2" = 1"

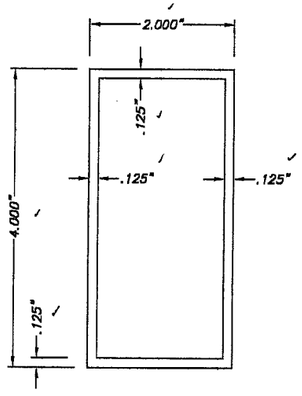


Ⓕ TYPE 1 MULLION:
4" EXTRUDED ALUMINUM
6063–T6 ALUMINUM ALLOY
SCALE: 1/2" = 1"

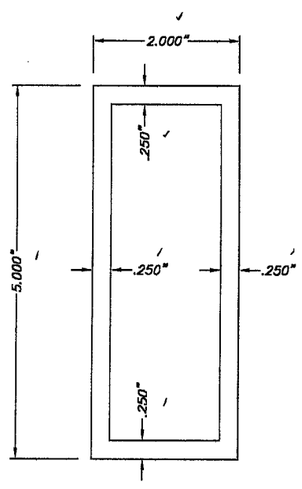


Ⓖ TYPE 2 MULLION:
5" EXTRUDED ALUMINUM
6063–T6 ALUMINUM ALLOY
SCALE: 1/2" = 1"

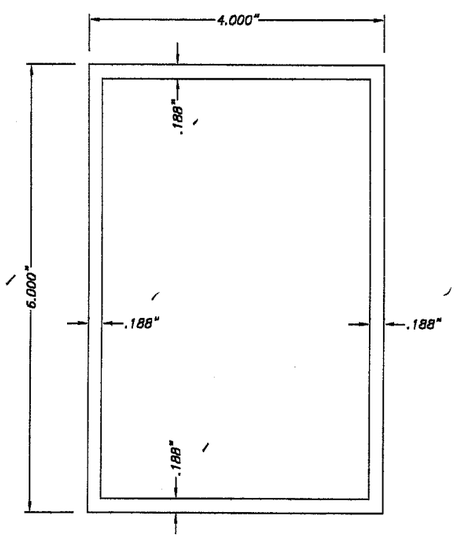


Ⓗ TYPE 3 MULLION:
6" EXTRUDED ALUMINUM
6063–T6 ALUMINUM ALLOY
SCALE: 1/2" = 1"

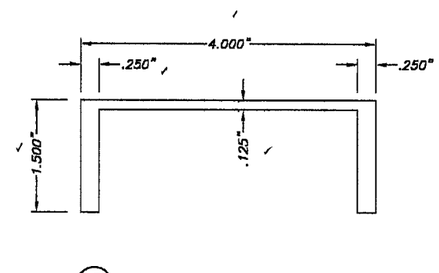


Ⓘ TYPE 1 HEADER:
6063–T6 ALUMINUM ALLOY
SCALE: 1/2" = 1"

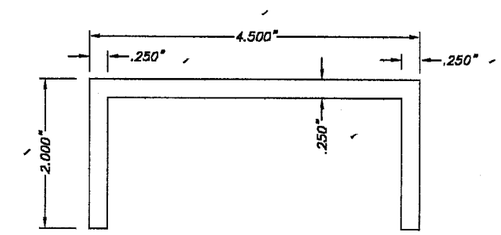


Ⓙ TYPE 2 HEADER:
6063–T6 ALUMINUM ALLOY
SCALE: 1/2" = 1"

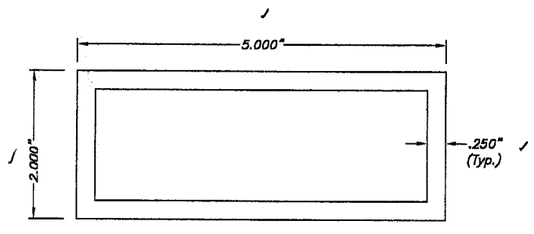


Ⓚ TYPE 3 HEADER:
6063–T6 ALUMINUM ALLOY
SCALE: 1/2" = 1"

PRODUCT REVISED
as complying with the Florida
Building Code
Acceptance No 03-0106.09
Expiration Date 04/30/06
By
Miami Dade Product Control
Division

F.B.C.(H.V.H.Z.)/MIAMI–DADE COUNTY

JUL 29 2003

TILTECO INC.
TILLIT TESTING & ENGINEERING COMPANY
8595 N.W. 36th. St., Ste. 217, VIRGINIA GARDENS, FL 33166
Phone : (305)871–1530 . Fax : (305)871–1531
EB–0006719
WALTER A. TILLIT Jr., P. E.
FLORIDA Lic. # 44167

63 mm EXTRUDED ROLL–UP SHUTTER

**HOMESHIELD INDUSTRIES, INC.**
3585 E. 10th. COURT
HIALEAH, FLORIDA 33013

| REV. No | DESCRIPTION | DATE | REV. No | DESCRIPTION | DATE |
|---|---|---|---|---|---|
| 1 | OLD 97–245 | 11/11/02 | 3 | | |
| 2 | – | – | 4 | | |

| | |
|---|---|
| – SCALE | |
| 11/11/02 DATE | |
| 02–530 DRAWING No | |
| SHEET 2 OF 14 | |

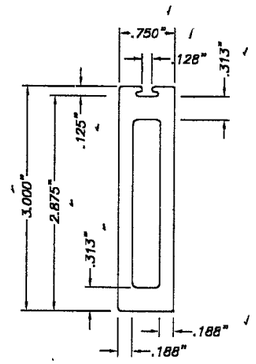


(L) TYPE 1 STORM BAR

EXTRUDED STORM BAR
6063–T6 ALUMINUM ALLOY
SCALE: 1/2" = 1"

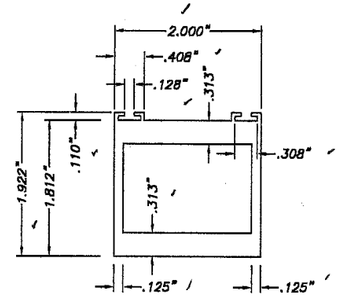


(M) TYPE 2 STORM BAR

EXTRUDED STORM BAR
6063–T6 ALUMINUM ALLOY
SCALE: 1/2" = 1"

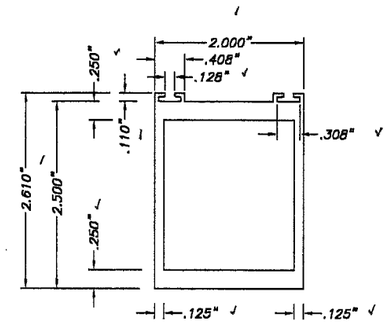


(N) TYPE 3 STORM BAR

2" x 2 1/2" EXTRUDED STORM BAR
6063–T6 ALUMINUM ALLOY
SCALE: 1/2" = 1"

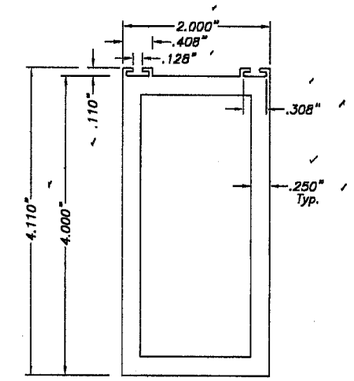


(O) TYPE 4 STORM BAR

2" x 4" EXTRUDED STORM BAR
6063–T6 ALUMINUM ALLOY
SCALE: 1/2" = 1"

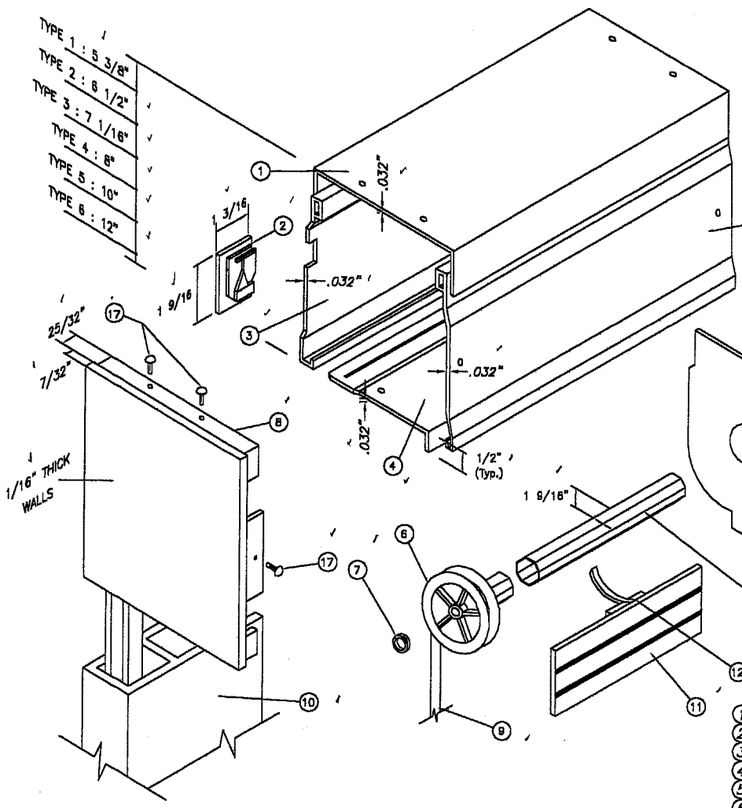


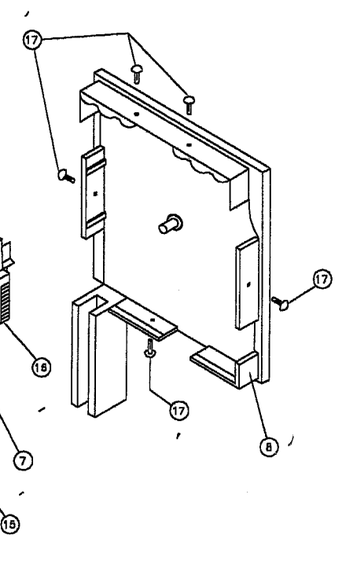


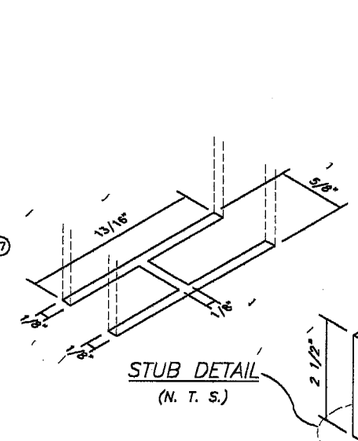


STUB DETAIL
(N. T. S.)

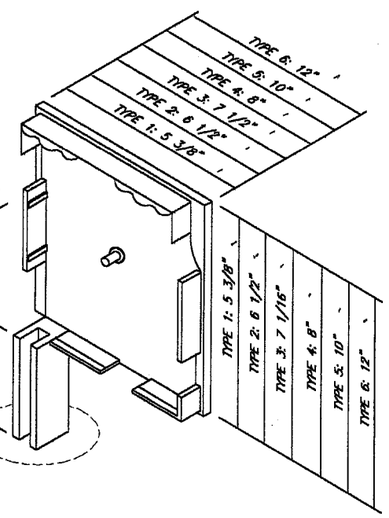


(Q) END CAP

(P) BOX COMPONENTS AND ASSEMBLY DETAIL

1. TOP PROFILE 3005–H28 ALLOY.
2. BOTTOM LEADER W/PLUSH.
3. REAR PROFILE 3005–H28 ALLOY.
4. BOTTOM PROFILE 3005–H28 ALLOY.
5. COVER PROFILE 3005–H28 ALLOY.
6. NYLON DISK: 4 1/4" O. D.
7. ROLLING CUSHION W/BALLS.
8. END CAP: CAST ALUMINUM.
9. RIBBON: 17/32" WIDE.
10. SIDE RAIL.
11. SLAT.
12. EXTRUDED ALUMINUM DRAWING HOOP.
13. GALVANIZED STEEL DRUM: 1 9/16" O. D. x 0.032" Thk.
14. RETAINING METAL PLATE: 26 Ga. Galv. Stl. AT EACH END.
15. NYLON FERRULE: 1 17/32" O. D. x 0.045" Thk. x 3 5/16" Long.
16. NYLON FUNNEL.
17. SCREWS: # 4 x 1/2" S. S.

JUL 29 2003

PRODUCT REVISED
as complying with the Florida Building Code
Acceptance No. 03-0106.09
Expiration Date 04/30/06
By
Miami Dade Product Control Division

F.B.C.(H.V.H.Z.)/MIAMI–DADE COUNTY


TILTECO INC.
TILLIT TESTING & ENGINEERING COMPANY
6595 N.W. 36th. St., Ste. 217, VIRGINIA GARDENS, FL 33166
Phone : (305)871-1530 . Fax : (305)871-1531
EB-0006719
WALTER A. TILLIT Jr., P. E.
FLORIDA Lic. # 44167


63 mm EXTRUDED ROLL–UP SHUTTER

**HOMESHIELD INDUSTRIES, INC.**
3585 E. 10th. COURT
HIALEAH, FLORIDA 33013

| REV. No | DESCRIPTION | DATE | REV. No | DESCRIPTION | DATE |
|---|---|---|---|---|---|
| 1 | OLD 97-245 | 11/11/02 | 3 | | |
| 2 | – | – | 4 | | |

SCALE: –
DATE: 11/11/02
DRAWING No: 02–530
SHEET 3 OF 14

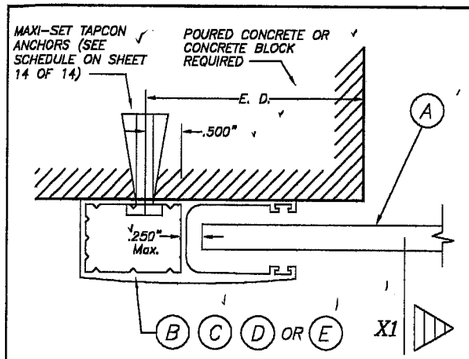


SECTION P – P (1) : WALL MOUNT

SCALE: 1/2" = 1"

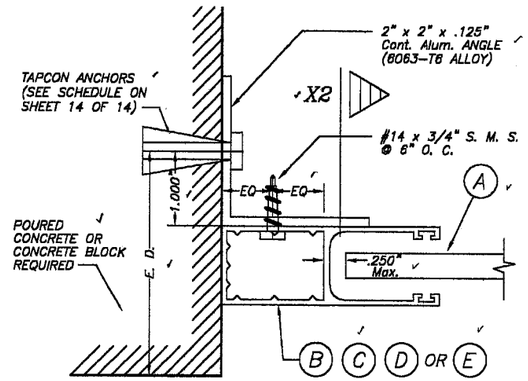


SECTION P – P (2) : SIDE WALL MOUNT

SCALE: 1/2" = 1"

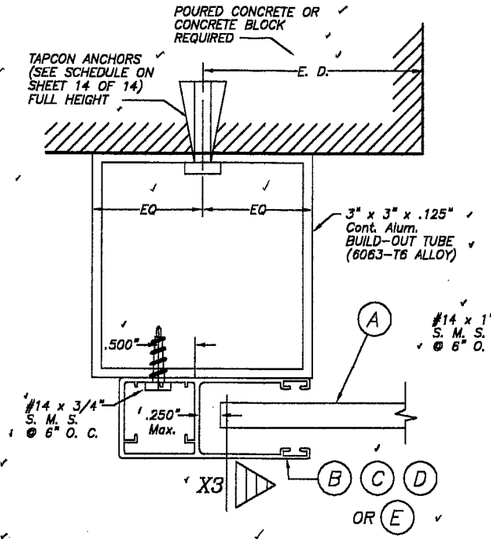


SECTION P – P (3) : BUILD-OUT

SCALE: 1/2" = 1"

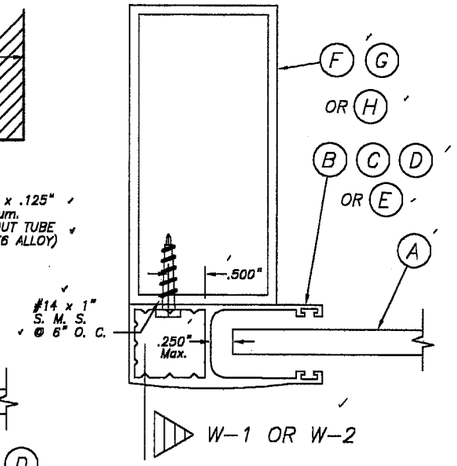


SECTION Q – Q :

MULLION MOUNT (END)

SCALE: 1/2" = 1"

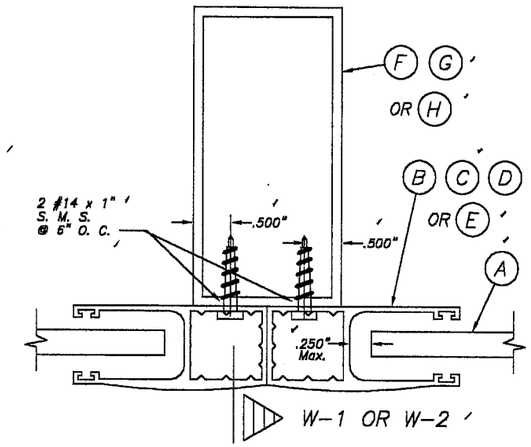


SECTION R – R :

MULLION MOUNT (MULTIPLE)

SCALE: 1/2" = 1"

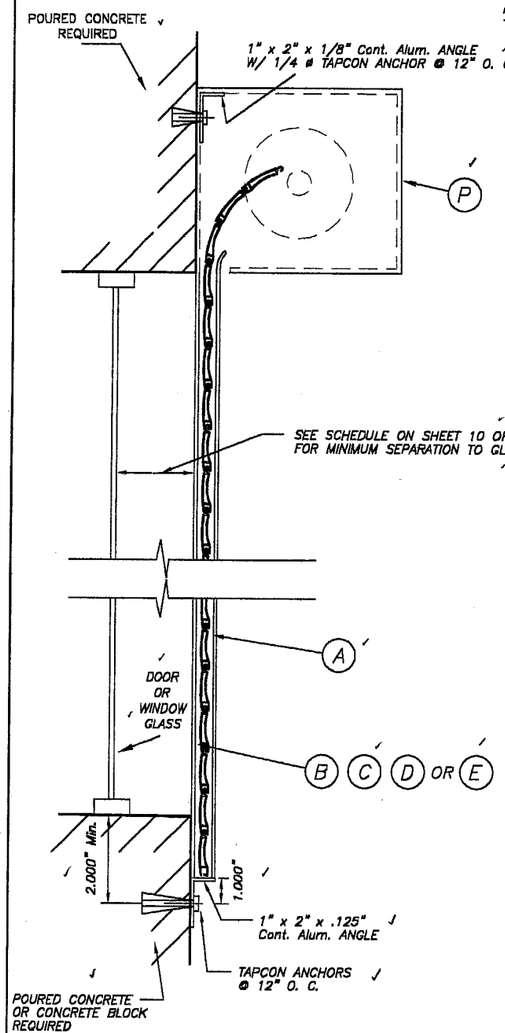


SECTION X – X (1)

N. T. S.

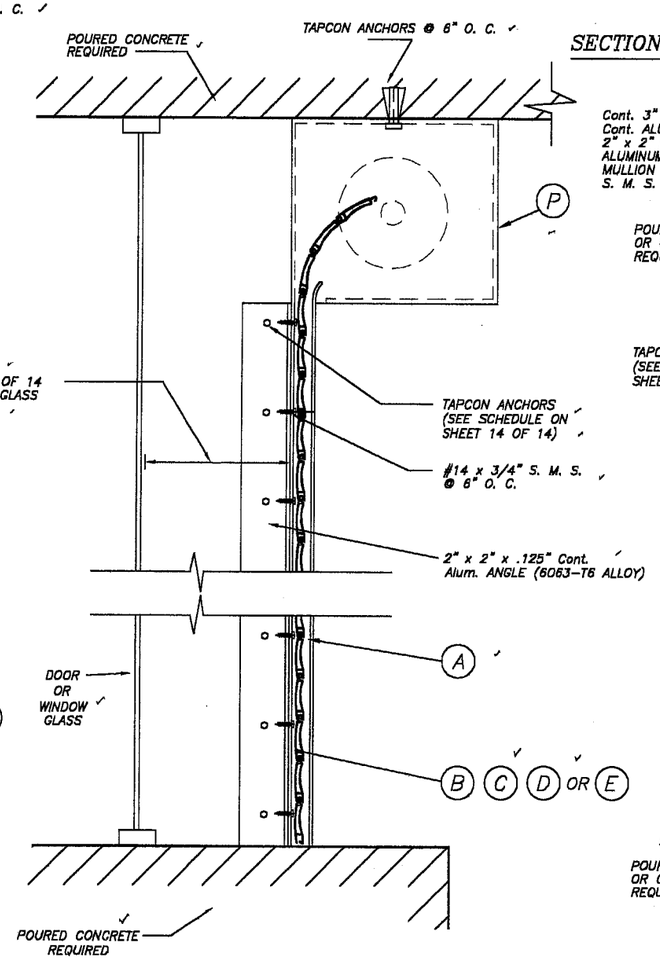


SECTION X – X (2)

N. T. S.

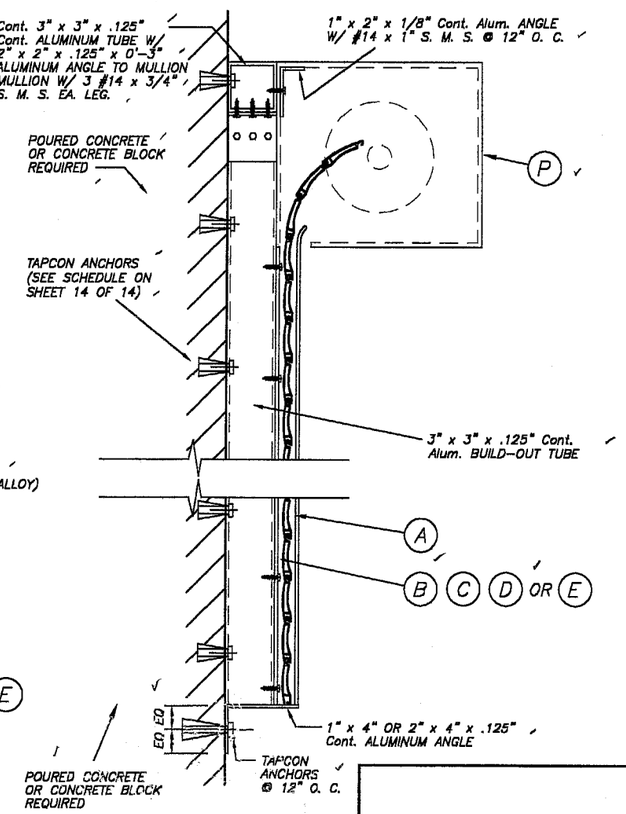


SECTION X – X (3)

N. T. S.

JUL 29 2003

PRODUCT REVISED
as complying with the Florida Building Code
Acceptance No. 03-0106.09
Expiration Date 04/30/06
By
Miami Dade Product Control Division

F.B.C.(H.V.H.Z.)/MIAMI-DADE COUNTY

TILTECO INC.
TILLIT TESTING & ENGINEERING COMPANY
6595 N.W. 36th. St., Ste. 217, VIRGINIA GARDENS, FL. 33166
Phone : (305)871-1530 . Fax : (305)871-1531
EB-0006719
WALTER A. TILLIT Jr., P. E.
FLORIDA Lic. # 44167

63 mm EXTRUDED ROLL-UP SHUTTER

**HOMESHIELD INDUSTRIES, INC.**
3585 E. 10th. COURT
HIALEAH, FLORIDA 33013

| REV. No | DESCRIPTION | DATE | REV. No | DESCRIPTION | DATE |
|---|---|---|---|---|---|
| 1 | OLD 97-245 | 11/11/02 | 3 | | |
| 2 | – | – | 4 | | |

| | |
|---|---|
| SCALE | – |
| DATE | 11/11/02 |
| DRAWING No | 02-530 |
| | SHEET 4 OF 14 |

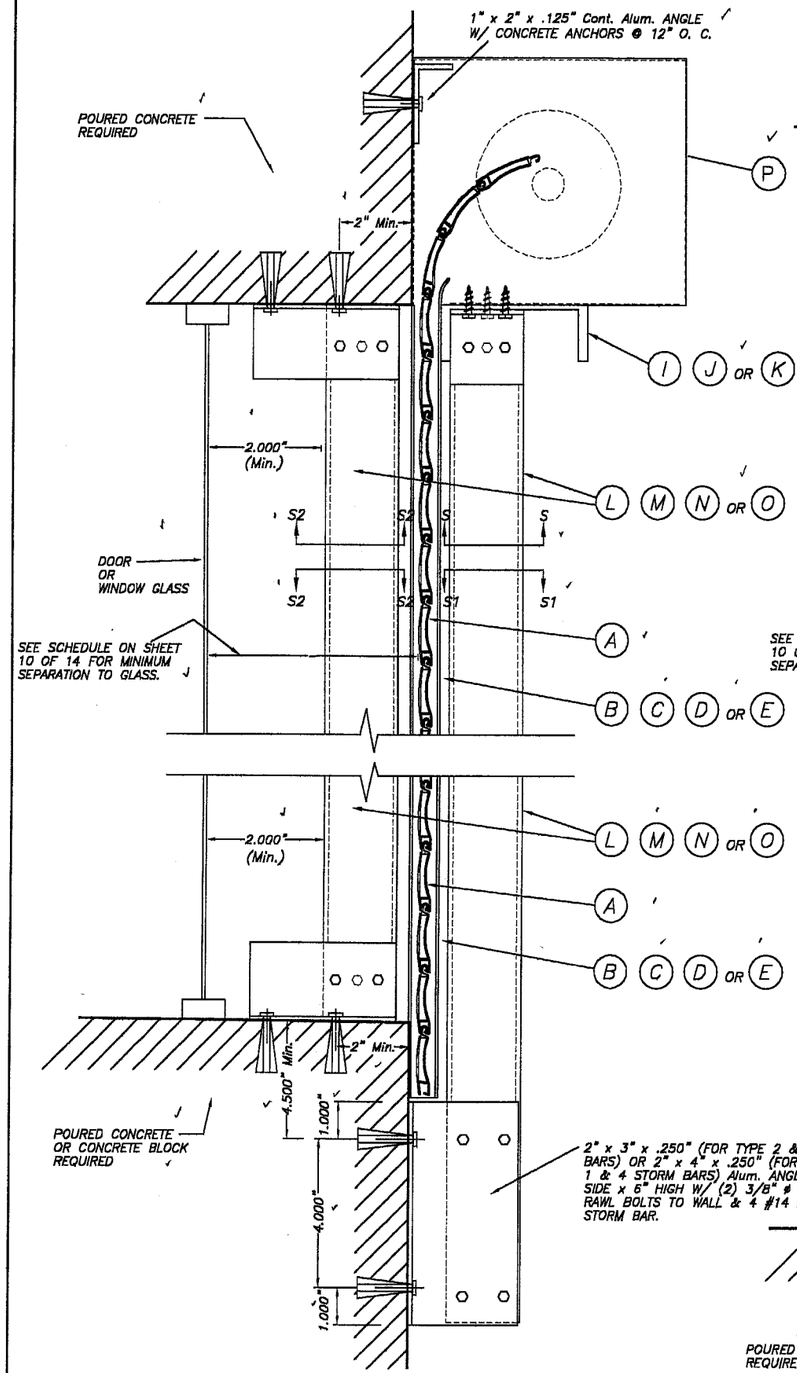


## WALL MOUNTING : SECTION V – V (1)

SCALE : 1/4" = 1"

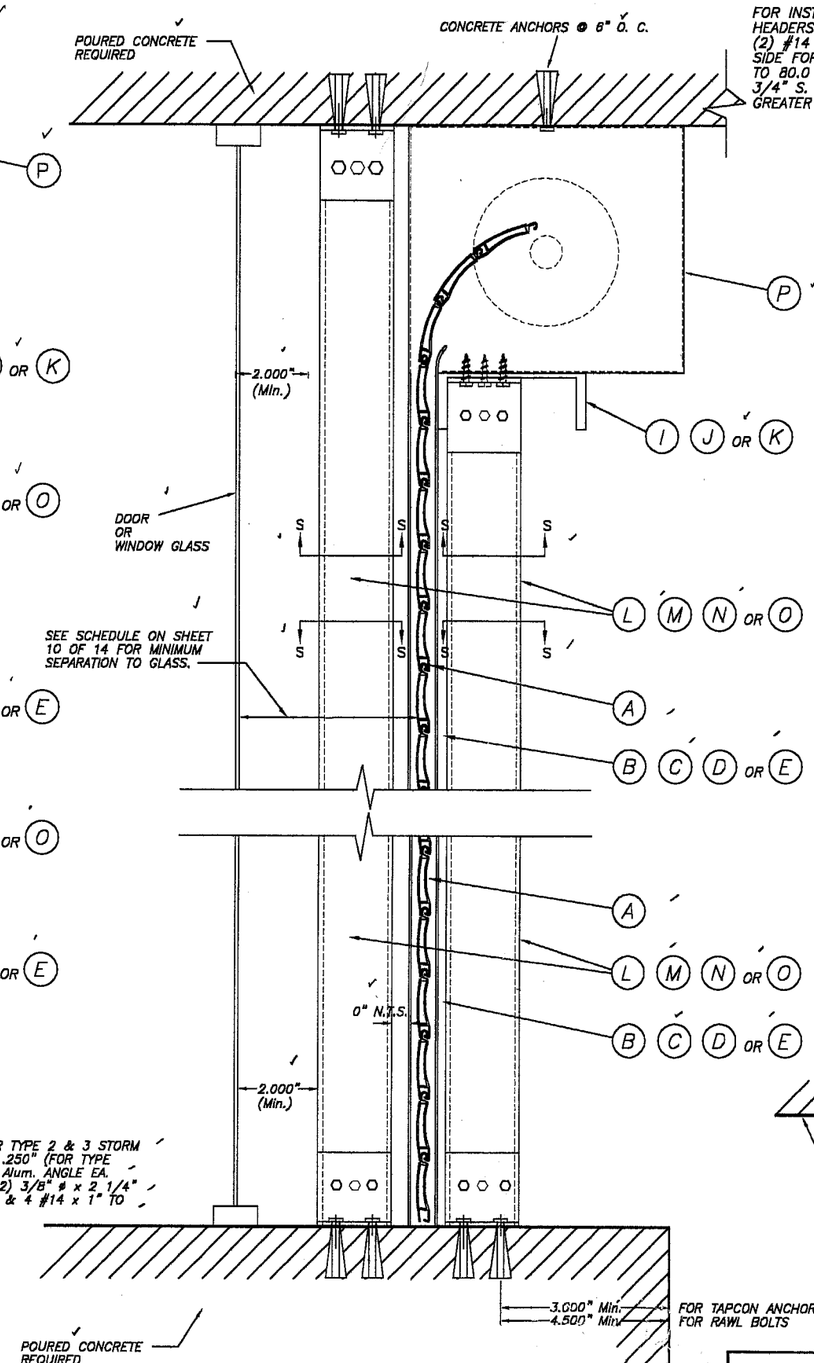


## CEILING & FLOOR MOUNTING : SECTION V – V (2)

SCALE : 1/4" = 1"

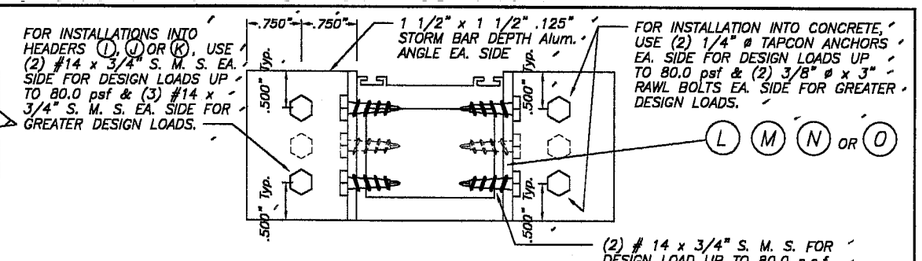


## SECTION S – S

SCALE : 1/2" = 1"

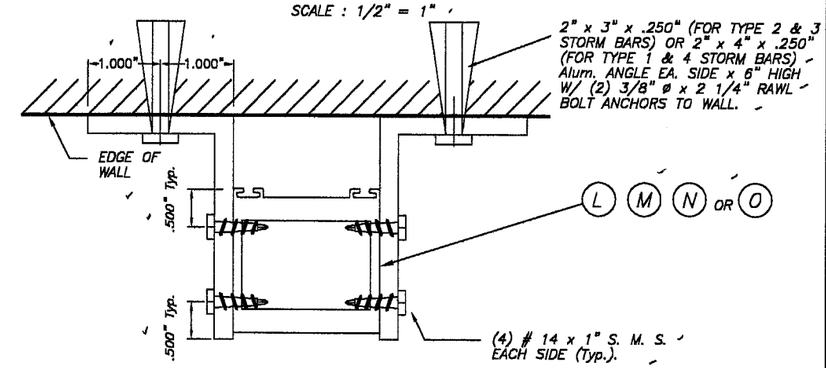


## SECTION S1 – S1

SCALE : 1/2" = 1"

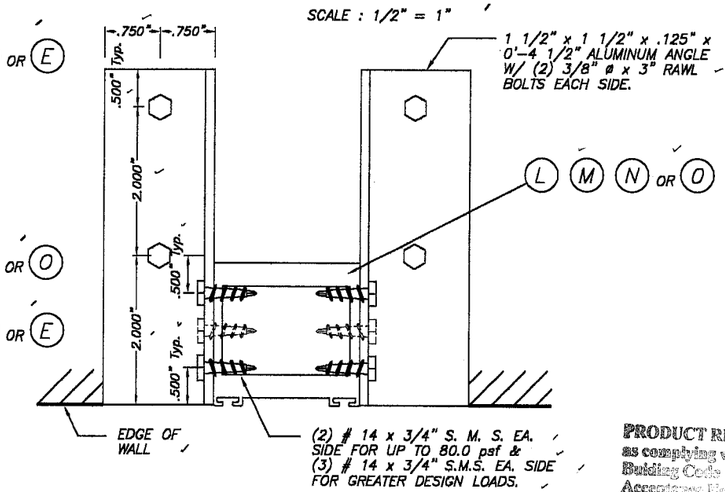


## SECTION S2 – S2

SCALE : 1/2" = 1"

PRODUCT REVISED
as complying with the Florida Building Code
Acceptance No 03-0106.09
Expiration Date 04/30/06
By
Miami Dade Product Control Division

F.B.C.(H.V.H.Z.)/MIAMI–DADE COUNTY

JUL 29 2003

TILTECO INC.
TILLIT TESTING & ENGINEERING COMPANY
6865 N.W. 36th. St., Ste. 217, VIRGINIA GARDENS, Fl. 33166
Phone : (305)871–1530 . Fax : (305)871–1531
EB–0006719
WALTER A. TILLIT Jr., P. E.
FLORIDA Lic. # 44167

63 mm EXTRUDED ROLL–UP SHUTTER

**HOMESHIELD INDUSTRIES, INC.**
3585 E. 10th. COURT
HIALEAH, FLORIDA 33013

| REV. No | DESCRIPTION | DATE | REV. No | DESCRIPTION | DATE |
|---|---|---|---|---|---|
| 1 | OLD 97–245 | 11/11/02 | 3 | | |
| 2 | – | – | 4 | | |

SCALE: –
DATE: 11/11/02
DRAWING No: 02–530
SHEET 5 OF 14

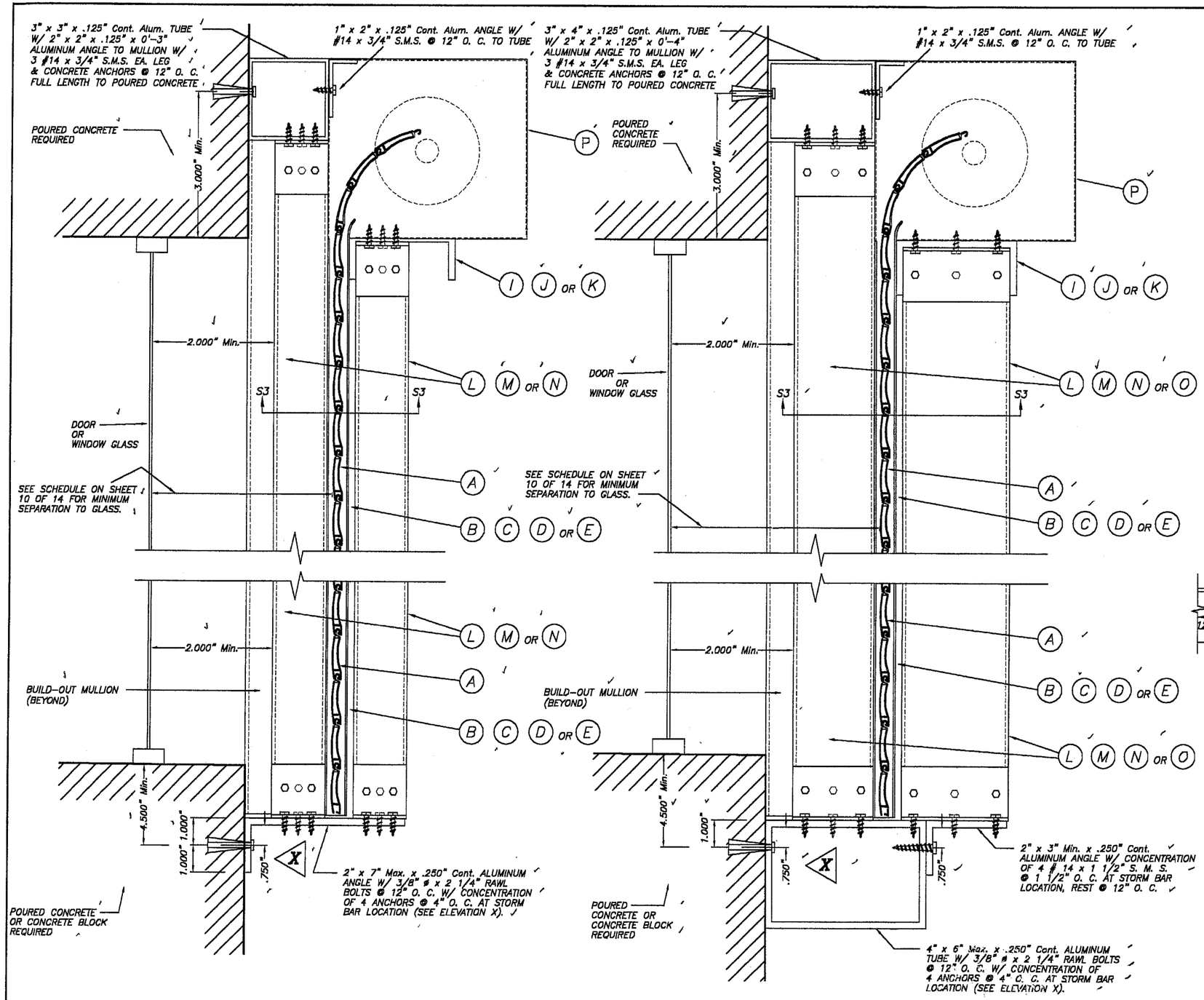


## CASE I

## CASE II

## STORM BAR CONNECTION AT BUILD-OUT INSTALLATION : SECTIONS V – V (3)

SCALE : 1/4" = 1"

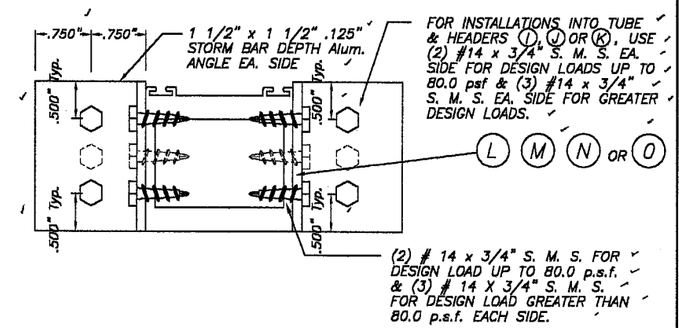


## SECTION S3 – S3

SCALE : 1/2" = 1"

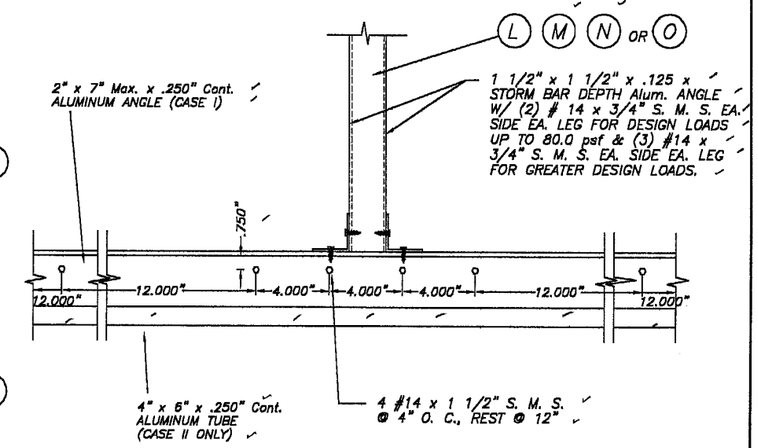


## ELEVATION X

SCALE : 1/8" = 1"

PRODUCT REVISED
as complying with the Florida Building Code
Acceptance No. 03-0106.09
Expiration Date 04/30/05
By:
Miami Dade Product Control Division

F.B.C.(H.V.H.Z.)/MIAMI-DADE COUNTY

JUL 29 2003

TILTECO INC.
TILLIT TESTING & ENGINEERING COMPANY
6595 N.W. 36th. St., Ste. 217, VIRGINIA GARDENS, FL. 33166
Phone : (305)871-1530 . Fax : (305)871-1531
EB-0006719
WALTER A. TILLIT Jr., P. E.
FLORIDA Lic. # 44167

63 mm EXTRUDED ROLL-UP SHUTTER

**HOMESHIELD INDUSTRIES, INC.**
3585 E. 10th. COURT
HIALEAH, FLORIDA 33013

| REV. No | DESCRIPTION | DATE | REV. No | DESCRIPTION | DATE |
|---|---|---|---|---|---|
| 1 | OLD 97-245 | 11/11/02 | 3 | | |
| 2 | – | – | 4 | | |

SCALE –
DATE 11/11/02
DRAWING No 02-530
SHEET 6 OF 14

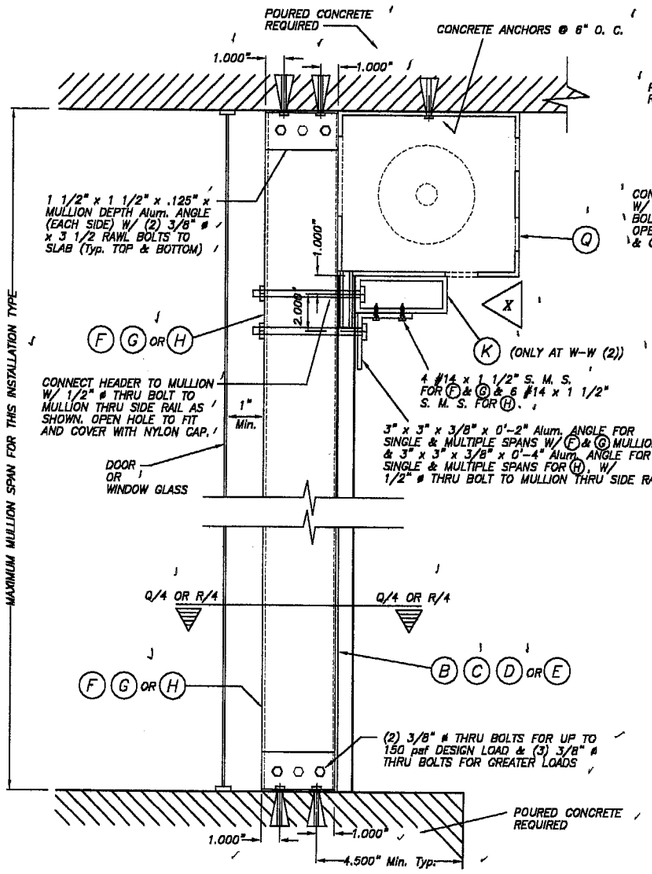


CASE I

## FLOOR/CEILING MOUNTING : SECTION W-W (1) & W-W (2)

SCALE : 1/8" = 1"

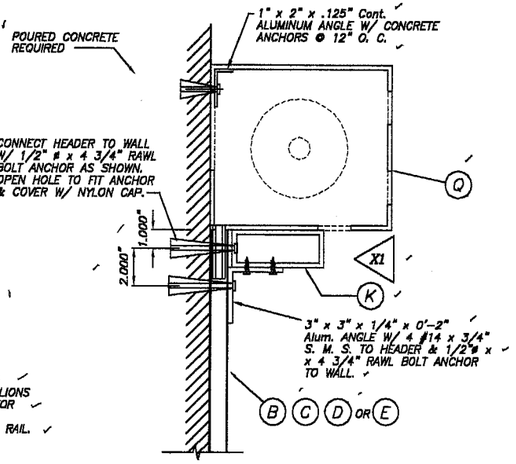


## WALL MOUNTING : SECTION W-W (3)

SCALE : 1/8" = 1"

NOTE :
THIS INSTALLATION IS ONLY VALID FOR STORM BARS WITH Max. SPAN = 8'-0", HEADERS WITH 12'-0" Max. SINGLE SPAN & 80 psf MAXIMUM DESIGN LOAD.

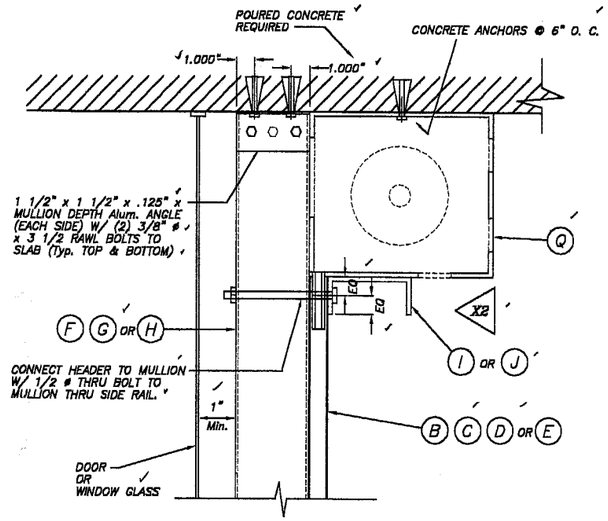


## CEILING MOUNTING : SECTION W-W (2)

SCALE : 1/8" = 1"

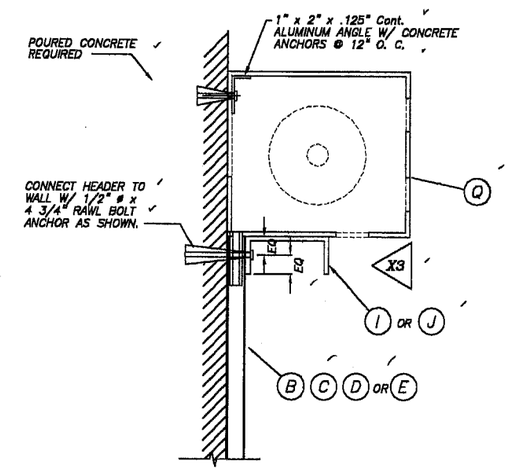


## WALL MOUNTING : SECTION W-W (3)

SCALE : 1/8" = 1"

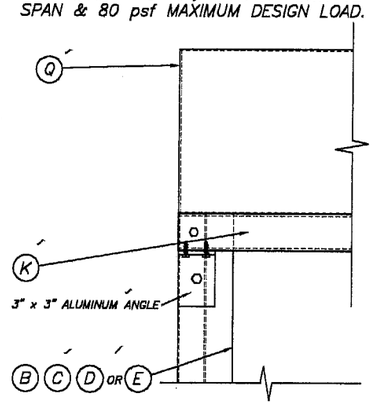


## ELEVATION X1

SCALE : 1/8" = 1"

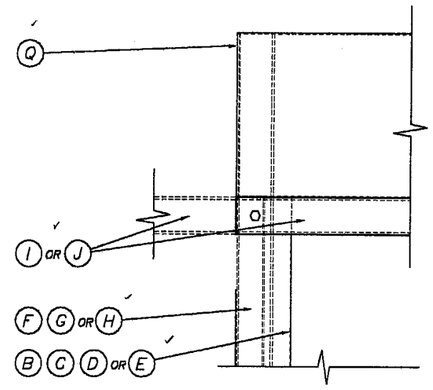


## ELEVATION X2

SCALE : 1/8" = 1"

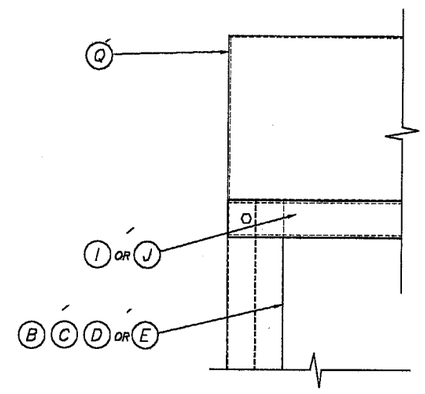


## ELEVATION X3

SCALE : 1/8" = 1"

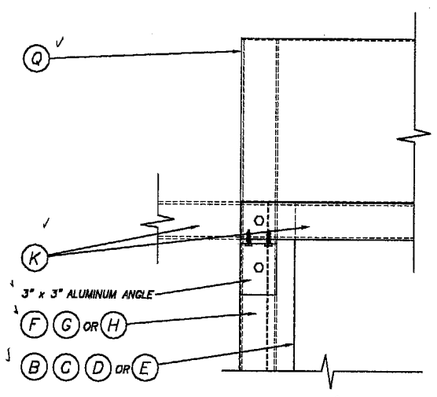


## ELEVATION X

SCALE : 1/8" = 1"

## TYPICAL HEADER CONNECTION AT ENDS: SECTIONS W-W

PRODUCT REVISED
as complying with the Florida Building Code
Acceptance No. 03-0106.09
Expiration Date 04/30/05
By
Miami Dade Product Control Division

F.B.C.(H.V.H.Z.)/MIAMI-DADE COUNTY

JUL 29 2003

TILTECO INC.
TILLIT TESTING & ENGINEERING COMPANY
6695 N.W. 36th. St., Ste. 217, VIRGINIA GARDENS, FL 33166
Phone : (305)871-1530 . Fax : (305)871-1531
EB-0006719
WALTER A. TILLIT Jr., P. E.
FLORIDA Lic. # 44167

63 mm EXTRUDED ROLL-UP SHUTTER

**HOMESHIELD INDUSTRIES, INC.**
3585 E. 10th. COURT
HIALEAH, FLORIDA 33013

| REV. No | DESCRIPTION | DATE | REV. No | DESCRIPTION | DATE |
|---|---|---|---|---|---|
| 1 | OLD 97-245 | 11/11/02 | 3 | | |
| 2 | - | - | 4 | | |

SCALE: -
DATE: 11/11/02
DRAWING No: 02-530
SHEET 7 OF 14

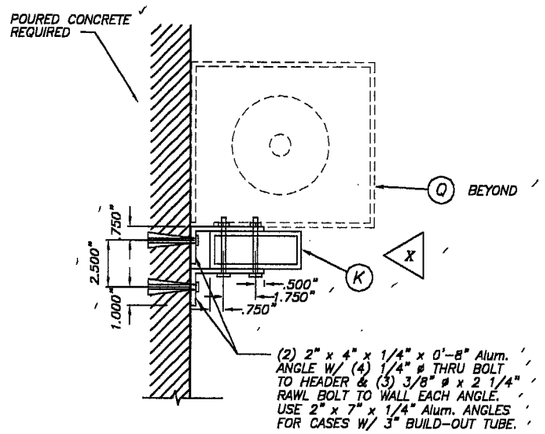


CASE I

## WALL MOUNTING : SECTION W-W(3)

SCALE : 1/8" = 1"

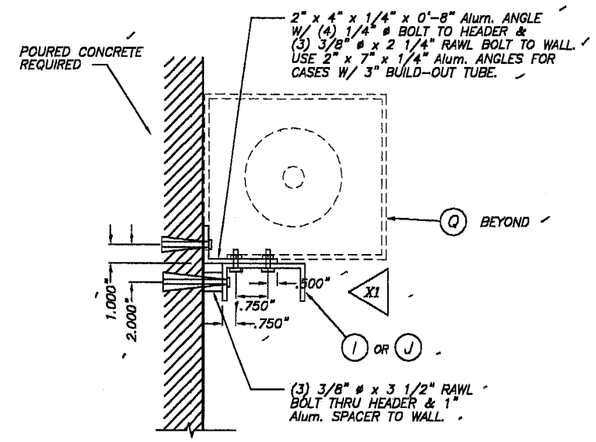


CASE II

## WALL MOUNTING : SECTION W-W(3)

SCALE : 1/8" = 1"

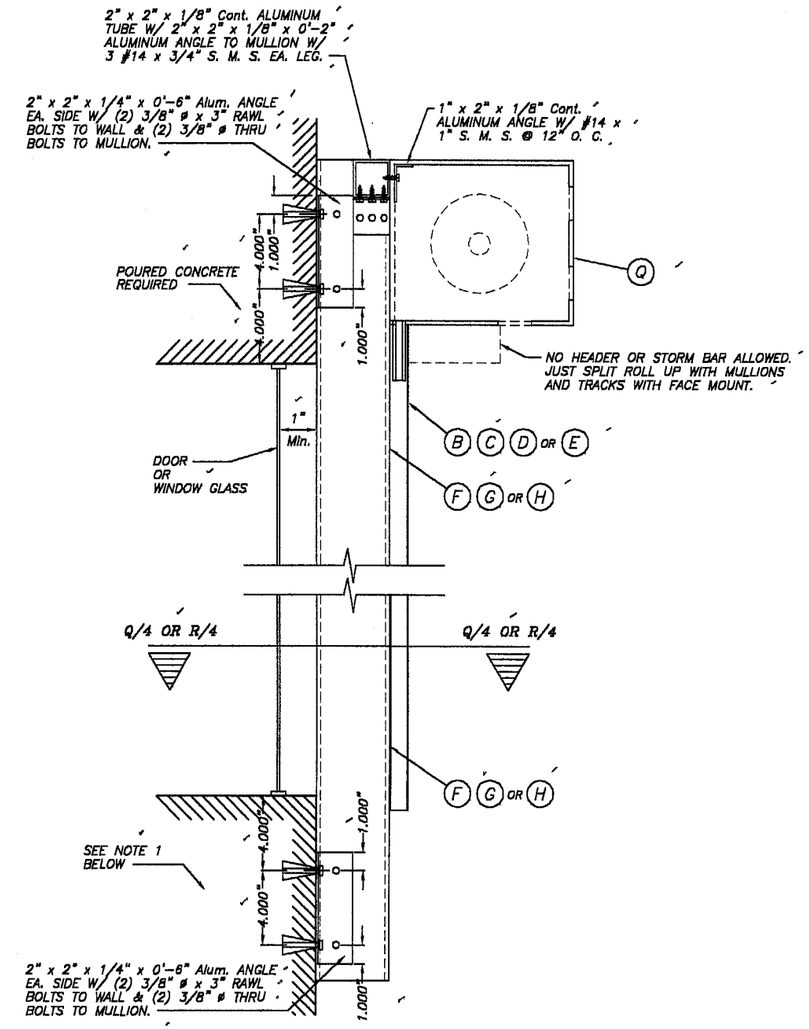


## WALL MOUNTING : MULLION CONNECTION AT TOP & BOTTOM : SECTION W-W (1)

SCALE : 1/8" = 1"

NOTE 1 :
EXISTING WALL MAY BE POURED CONCRETE OR CONCRETE BLOCK FOR DESIGN LOADS UP TO 80.0 psf AND SHALL BE POURED CONCRETE OR CONCRETE FILLED BLOCKS FOR GREATER LOADS.

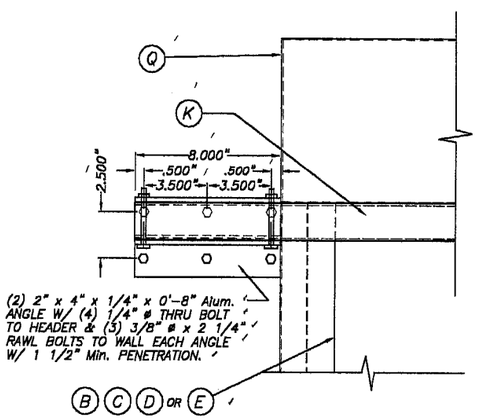


## ELEVATION X

SCALE : 1/8" = 1"

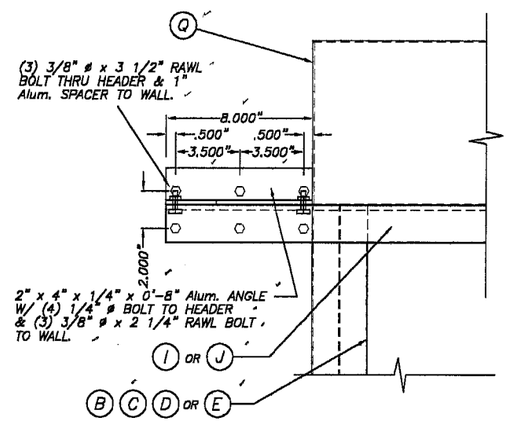


## ELEVATION X1

SCALE : 1/8" = 1"

## TYPICAL HEADER CONNECTION AT ENDS : SECTIONS W-W (CONTINUED)

PRODUCT REVISED
as complying with the Florida Building Code
Acceptance No 03-0106.09
Expiration Date 04/30/06
By
Miami Dade Product Control Division

F.B.C.(H.V.H.Z.)/MIAMI-DADE COUNTY

JUL 29 2003

TILTECO INC.
TILLIT TESTING & ENGINEERING COMPANY
6595 N.W. 36th. St., Ste. 217, VIRGINIA GARDENS, FL 33166
Phone : (305)871-1530 . Fax : (305)871-1531
EB-0006719
WALTER A. TILLIT Jr., P. E.
FLORIDA Lic. # 44167

63 mm EXTRUDED ROLL-UP SHUTTER

**HOMESHIELD INDUSTRIES, INC.**
3585 E. 10th. COURT
HIALEAH, FLORIDA 33013

| REV. No | DESCRIPTION | DATE | REV. No | DESCRIPTION | DATE |
|---|---|---|---|---|---|
| 1 | OLD 97-245 | 11/11/02 | 3 | | |
| 2 | – | – | 4 | | |

| | |
|---|---|
| – SCALE | |
| 11/11/02 DATE | |
| 02-530 DRAWING No | |
| SHEET 8 OF 14 | |

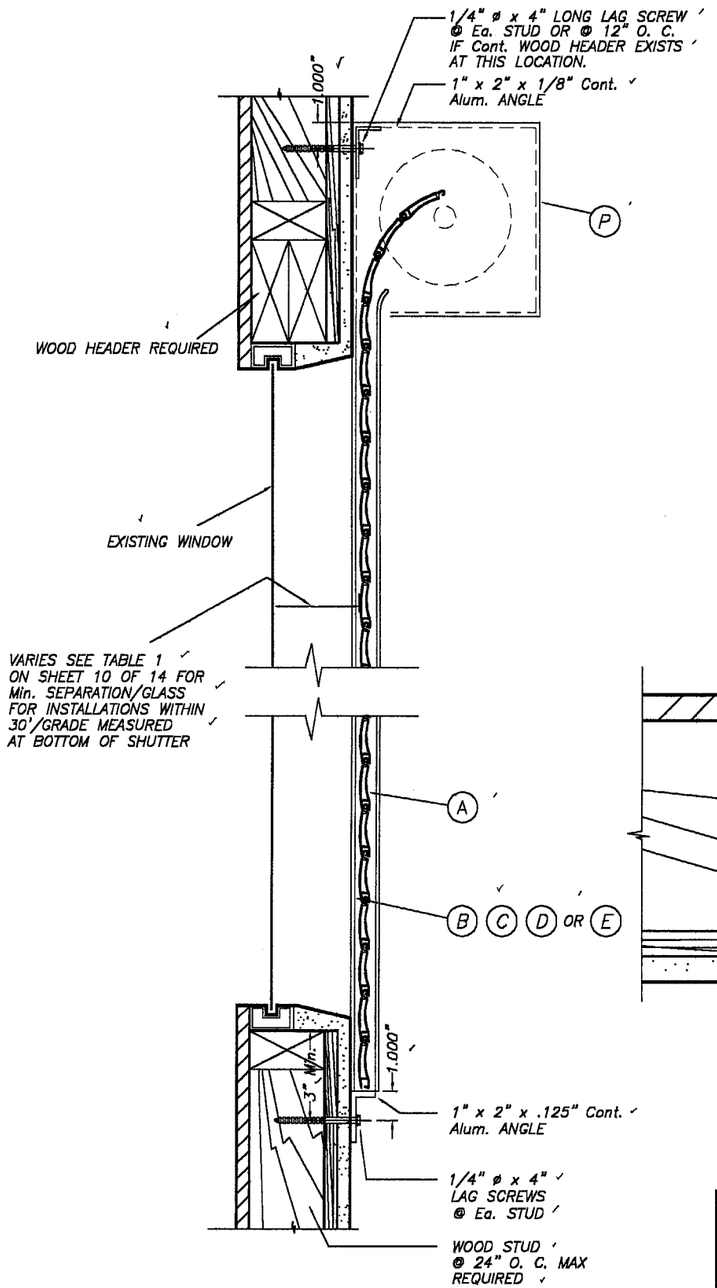


## WALL MOUNTING INSTALLATION

### SINGLE SPAN CONDITION

N. T. S.

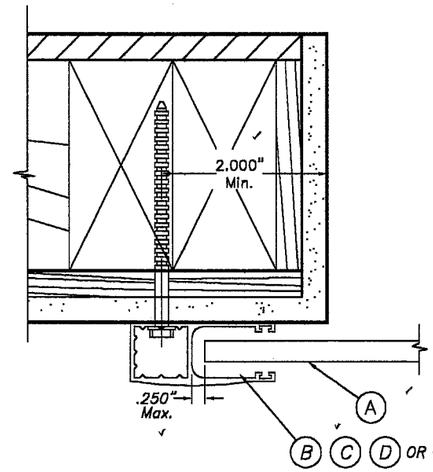


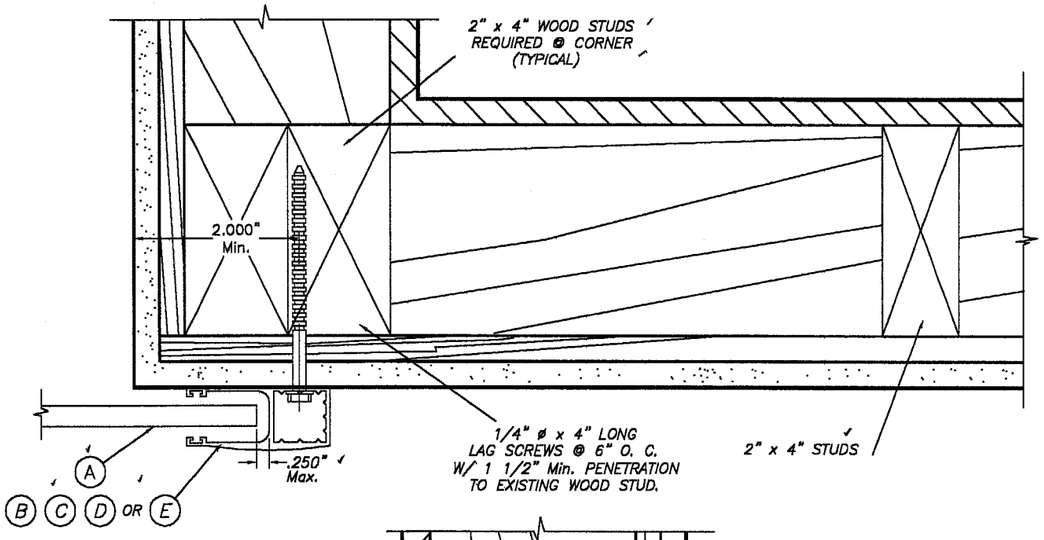


## PLAN A (SECTION)

### WALL MOUNT

SCALE : 3/8" = 1"

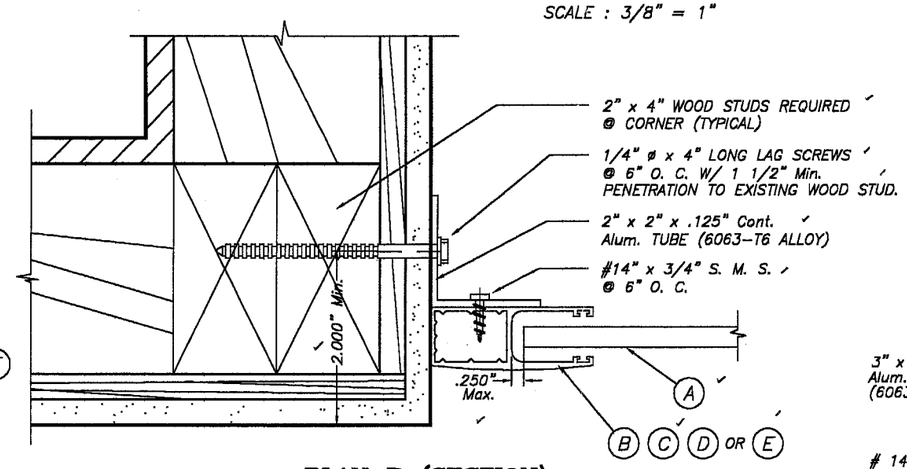


## PLAN B (SECTION)

### INSIDE MOUNT

SCALE : 3/8" = 1"

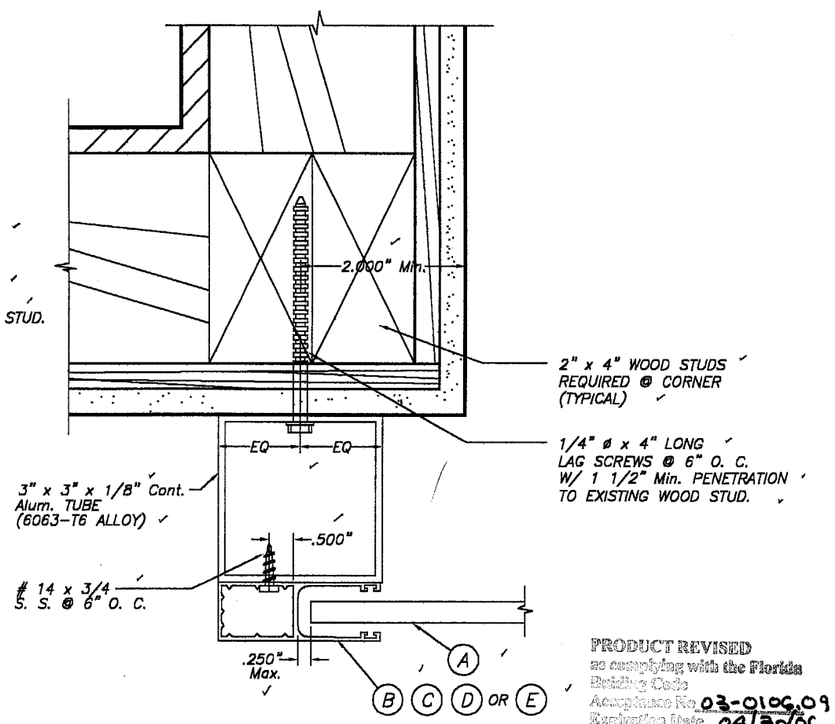


## PLAN C (SECTION)

### BUILD-OUT

SCALE : 3/8" = 1"

NOTES:

1. INSTALLATIONS ARE ONLY VALID FOR BUILDINGS WITH DESIGN LOADS UP TO 80.0 psf.
2. FOR NEW FRAME CONSTRUCTION: WOOD MEMBER TO BE SOUTHERN PINE No. 2 W/ SPECIFIC DENSITY OF 0.55 OR EQUAL.
3. MINIMUM PENETRATION OF LAG SCREWS INTO WOOD MEMBER TO BE 1 1/2".

PRODUCT REVISED
as complying with the Florida Building Code
Acceptance No. 03-0106.09
Expiration Date 04/29/06
By
Miami Dade Product Control Division

F.B.C.(H.V.H.Z.)/MIAMI-DADE COUNTY

JUL 29 2003

TILTECO INC.
TILLIT TESTING & ENGINEERING COMPANY
6595 N.W. 36th. St., Ste. 217, VIRGINIA GARDENS, FL 33166
Phone : (305)871-1530 . Fax : (305)871-1531
EB-0006719
WALTER A. TILLIT Jr., P. E.
FLORIDA Lic. # 44167

63 mm EXTRUDED ROLL-UP SHUTTER

**HOMESHIELD INDUSTRIES, INC.**
3585 E. 10th. COURT
HIALEAH, FLORIDA 33013

| REV. No | DESCRIPTION | DATE | REV. No | DESCRIPTION | DATE |
|---|---|---|---|---|---|
| 1 | OLD 97-245 | 11/11/02 | 3 | | |
| 2 | - | - | 4 | | |

| | |
|---|---|
| SCALE | - |
| DATE | 11/11/02 |
| DRAWING No | 02-530 |
| | SHEET 9 OF 14 |

# SLAT PERFORMANCE CHART

## MAXIMUM DESIGN PRESSURE RATING "W" (p. s. f.) AND CORRESPONDING MAXIMUM SLAT SPAN "L" FOR TYPE 1 SLAT (USE NEGATIVE PRESSURE VALUES AS PER ASCE 7-98)

| DESIGN LOAD "W" (p.s.f.) | SLAT TYPE 1 | | | | | |
|---|---|---|---|---|---|---|
| | MAXIMUM SLAT SPAN * | | MINIMUM SEPARATION TO GLASS | | | |
| | SINGLE UNIT * | MULTIPLE UNIT * | SINGLE UNIT ** | MULTIPLE UNIT ** | SINGLE UNIT *** | MULTIPLE UNIT *** |
| 40.0 | 5'-6" | 5'-6" | 3" | 3" | 3" | 3" |
| 45.0 | 5'-6" | 5'-6" | 3" | 3" | 3" | 3" |
| 50.0 | 5'-4" | 5'-4" | 3" | 3" | 3" | 3" |
| 55.0 | 5'-2" | 5'-2" | 3" | 3" | 3" | 3" |
| 60.0 | 5'-0" | 5'-0" | 3" | 3" | 3" | 3" |
| 65.0 | 4'-10" | 4'-10" | 3" | 3" | 3" | 3" |
| 70.0 | 4'-9" | 4'-9" | 3" | 3" | 3" | 3" |
| 75.0 | 4'-7" | 4'-7" | 2 7/8" | 2 7/8" | 2 5/8" | 2 5/8" |
| 80.0 | 4'-6" | 4'-6" | 2 7/8" | 2 7/8" | 2 5/8" | 2 5/8" |
| 85.0 | 4'-5" | 4'-5" | 2 7/8" | 2 7/8" | 2 5/8" | 2 5/8" |
| 90.0 | 4'-4" | 4'-4" | 2 7/8" | 2 7/8" | 2 5/8" | 2 5/8" |
| 95.0 | 4'-3" | 4'-3" | 2 7/8" | 2 7/8" | 2 5/8" | 2 5/8" |
| 100.0 | 4'-2" | 4'-2" | 2 7/8" | 2 7/8" | 2 5/8" | 2 5/8" |
| 105.0 | 4'-2" | 4'-2" | 2 7/8" | 2 7/8" | 2 5/8" | 2 5/8" |
| 110.0 | 4'-1" | 4'-1" | 2 7/8" | 2 7/8" | 2 5/8" | 2 5/8" |
| 115.0 | 4'-0" | 4'-0" | 2 7/8" | 2 7/8" | 2 5/8" | 2 5/8" |
| 120.0 | 3'-11" | 3'-11" | 2 7/8" | 2 7/8" | 2 1/2" | 2 1/2" |
| 125.0 | 3'-11" | 3'-11" | 2 7/8" | 2 7/8" | 2 1/2" | 2 1/2" |
| 130.0 | 3'-10" | 3'-10" | 2 7/8" | 2 7/8" | 2 1/2" | 2 1/2" |

| DESIGN LOAD "W" (p.s.f.) | SLAT TYPE 1 | | | | | |
|---|---|---|---|---|---|---|
| | MAXIMUM SLAT SPAN * | | MINIMUM SEPARATION TO GLASS | | | |
| | SINGLE UNIT * | MULTIPLE UNIT * | SINGLE UNIT ** | MULTIPLE UNIT ** | SINGLE UNIT *** | MULTIPLE UNIT *** |
| 135.0 | 3'-10" | 3'-10" | 2 7/8" | 2 7/8" | 2 1/2" | 2 1/2" |
| 140.0 | 3'-9" | 3'-9" | 2 7/8" | 2 7/8" | 2 1/2" | 2 1/2" |
| 145.0 | 3'-9" | 3'-9" | 2 7/8" | 2 7/8" | 2 1/2" | 2 1/2" |
| 150.0 | 3'-8" | 3'-8" | 2 7/8" | 2 7/8" | 2 3/8" | 2 3/8" |
| 155.0 | 3'-8" | 3'-8" | 2 7/8" | 2 7/8" | 2 3/8" | 2 3/8" |
| 160.0 | 3'-7" | 3'-7" | 2 7/8" | 2 7/8" | 2 3/8" | 2 3/8" |
| 165.0 | 3'-7" | 3'-7" | 2 7/8" | 2 7/8" | 2 3/8" | 2 3/8" |
| 170.0 | 3'-6" | 3'-6" | 2 7/8" | 2 7/8" | 2 3/8" | 2 3/8" |
| 175.0 | 3'-6" | 3'-6" | 2 7/8" | 2 7/8" | 2 3/8" | 2 3/8" |
| 180.0 | 3'-5" | 3'-5" | 2 7/8" | 2 7/8" | 2 3/8" | 2 3/8" |
| 185.0 | 3'-5" | 3'-5" | 2 7/8" | 2 7/8" | 2 3/8" | 2 3/8" |
| 190.0 | 3'-5" | 3'-5" | 2 7/8" | 2 7/8" | 2 3/8" | 2 3/8" |
| 195.0 | 3'-4" | 3'-4" | 2 7/8" | 2 7/8" | 2 3/8" | 2 3/8" |
| 200.0 | 3'-4" | 3'-4" | 2 7/8" | 2 7/8" | 2 3/8" | 2 3/8" |
| 205.0 | 3'-4" | 3'-4" | 2 7/8" | 2 7/8" | 2 3/8" | 2 3/8" |
| 210.0 | 3'-3" | 3'-3" | 2 7/8" | 2 7/8" | 2 3/8" | 2 3/8" |
| 215.0 | 3'-3" | 3'-3" | 2 7/8" | 2 7/8" | 2 3/8" | 2 3/8" |
| 220.0 | 3'-3" | 3'-3" | 2 7/8" | 2 7/8" | 2 3/8" | 2 3/8" |
| 226.3 | 3'-2" | 3'-2" | 2 7/8" | 2 7/8" | 2 3/8" | 2 3/8" |

* SPANS VALID FOR ALL APPLICABLE ELEVATIONS OF BUILDING.

** MINIMUM SEPARARTION TO GLASS FOR SHUTTERS INSTALLED WITHIN THE FIRST 30'-0" ELEVATION OF BUILDING MEASURED AT BOTTOM OF SHUTTER AND MAXIMUM SLAT SPAN. SEE TABLE 1 FOR MINIMUM SEPARATION TO GLASS FOR SPANS LESS THAN Max. ALLOWED.

*** MINIMUM SEPARATION TO GLASS FOR SHUTTERS INSTALLED ABOVE 30'-0" ELEVATION OF BUILDING, MEASURED AT BOTTOM OF SHUTTER.

NOTE: MINIMUM SEPARATION TO GLASS FOR SINGLE AND MULTIPLE UNITS SHALL BE MEASURED FROM BACK OF SLAT TO GLASS.

TABLE 1 :

| SLAT SPAN (ft) | | Min. SEPARATION TO GLASS | |
|---|---|---|---|
| SINGLE UNIT | MULTIPLE UNIT | SINGLE UNIT | MULTIPLE UNIT |
| 4'-8" OR LESS | 4'-8" OR LESS | 2 7/8" | 2 7/8" |
| >4'-8" TO 5'-6" | >4'-8" TO 5'-6" | 3" | 3" |

## SIDE RAIL CONDITION FOR TYPE 1 SLAT

NOTE :

TYPE 1 SLAT SHALL ONLY BE USED JOINTLY WITH TYPE 3 & 4 SIDE RAILS FOR A MAXIMUM SLAT SPAN OF 56" AND A MAXIMUM PRESSURE RAITING OF 80 p.s.f. WHICHEVER IS WORSE.
USE TYPE 1 & 2 SIDE RAILS FOR ANY SLAT SPAN OR PRESSURE RATING INDICATED ON SCHEDULES.

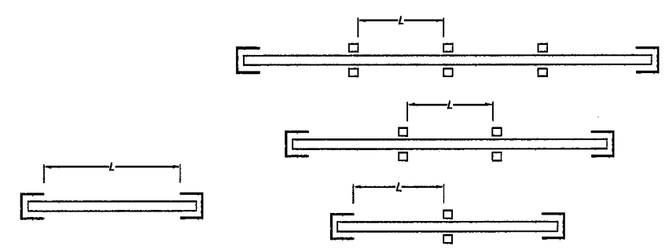


SINGLE SPAN

MULTIPLE SPAN

SPAN LAYOUT

PRODUCT REVISED
as complying with the Florida Building Code
Acceptance No. 03-0106.09
Expiration Date 04/30/06
By
Miami Dade Product Control Division

F.B.C.(H.V.H.Z.)/MIAMI-DADE COUNTY

JUL 29 2003

TILTECO INC.
TILLIT TESTING & ENGINEERING COMPANY
8695 N.W. 36th. St., Ste. 217, VIRGINIA GARDENS, FL 33166
Phone : (305)871-1530 . Fax : (305)871-1531
EB-0006719
WALTER A. TILLIT Jr., P. E.
FLORIDA Lic. # 44167

63 mm EXTRUDED ROLL-UP SHUTTER

**HOMESHIELD INDUSTRIES, INC.**
3585 E. 10th. COURT
HIALEAH, FLORIDA 33013

| REV. No | DESCRIPTION | DATE | REV. No | DESCRIPTION | DATE |
|---|---|---|---|---|---|
| 1 | OLD 97-245 | 11/11/02 | 3 | | |
| 2 | - | - | 4 | | |

SCALE: -
DATE: 11/11/02
DRAWING No: 02-530
SHEET 10 OF 14

# MULLION LOADING CHART

## MAXIMUM DESIGN PRESSURE RATING "W" (p. s. f.) AND CORRESPONDING MAXIMUM SPAN "L" (Ft.) FOR A GIVEN TYPE OF MULLION AND MULLION SPACING.

(USE NEGATIVE PRESSURE VALUES AS PER ASCE 7-98)

| MAXIMUM DESIGN LOAD "W" (p.s.f.) | TYPE 1 MULLION 2" x 4" x .125" | | TYPE 2 MULLION 2" x 5" x .250" | | | TYPE 3 MULLION 4" x 6" x .188" | | |
|---|---|---|---|---|---|---|---|---|
| | MULLION SPACING | | MULLION SPACING | | | MULLION SPACING | | |
| | 3'-6" OR LESS | > 3'-6" TO 5' | 3'-6" OR LESS | > 3'-6" TO 5' | > 5' TO 8' | 3'-6" OR LESS | > 3'-6" TO 5' | > 5' TO 8' |
| 40.0 | 8'-9" | 8'-11" | 12'-10" | 13'-1" | 11'-2" | 15'-11" | 16'-3" | 13'-11" |
| 45.0 | 8'-5" | 8'-7" | 12'-4" | 12'-7" | 10'-9" | 15'-4" | 15'-8" | 13'-5" |
| 50.0 | 8'-1" | 8'-3" | 11'-11" | 12'-2" | 10'-5" | 14'-10" | 15'-1" | 12'-11" |
| 55.0 | 7'-10" | 8'-0" | 11'-6" | 11'-9" | 10'-1" | 14'-4" | 14'-8" | 12'-7" |
| 60.0 | 7'-7" | 7'-9" | 11'-2" | 11'-5" | 9'-9" | 13'-11" | 14'-3" | 12'-2" |
| 65.0 | 7'-5" | 7'-7" | 10'-11" | 11'-2" | 9'-6" | 13'-7" | 13'-10" | 11'-10" |
| 70.0 | 7'-3" | 7'-5" | 10'-6" | 10'-10" | 9'-4" | 13'-3" | 13'-6" | 11'-7" |
| 75.0 | 7'-1" | 7'-3" | 10'-2" | 10'-7" | 9'-1" | 12'-11" | 13'-3" | 11'-4" |
| 80.0 | 6'-11" | 7'-1" | 9'-10" | 10'-5" | 8'-11" | 12'-8" | 12'-11" | 11'-1" |
| 85.0 | 6'-10" | 6'-11" | 9'-7" | 10'-2" | 8'-9" | 12'-5" | 12'-8" | 10'-10" |
| 90.0 | 6'-8" | 6'-10" | 9'-3" | 10'-0" | 8'-7" | 12'-2" | 12'-5" | 10'-8" |
| 95.0 | 6'-7" | 6'-8" | 9'-0" | 9'-10" | 8'-5" | 12'-0" | 12'-3" | 10'-6" |
| 100.0 | 6'-5" | 6'-7" | 8'-10" | 9'-8" | 8'-3" | 11'-9" | 12'-0" | 10'-4" |
| 105.0 | 6'-4" | 6'-6" | 8'-7" | 9'-6" | 8'-2" | 11'-7" | 11'-10" | 10'-2" |
| 110.0 | 6'-3" | 6'-4" | 8'-5" | 9'-4" | 8'-0" | 11'-5" | 11'-8" | 10'-0" |
| 115.0 | 6'-2" | 6'-3" | 8'-3" | 9'-3" | 7'-11" | 11'-3" | 11'-6" | 9'-10" |
| 120.0 | 6'-1" | 6'-2" | 8'-0" | 9'-1" | 7'-9" | 11'-1" | 11'-4" | 9'-8" |
| 125.0 | 6'-0" | 6'-1" | 7'-11" | 9'-0" | 7'-8" | 10'-11" | 11'-2" | 9'-7" |
| 130.0 | 5'-11" | 6'-0" | 7'-9" | 8'-10" | 7'-7" | 10'-10" | 11'-0" | 9'-5" |

| MAXIMUM DESIGN LOAD "W" (p.s.f.) | TYPE 1 MULLION 2" x 4" x .125" | | TYPE 2 MULLION 2" x 5" x .250" | | | TYPE 3 MULLION 4" x 6" x .188" | | |
|---|---|---|---|---|---|---|---|---|
| | MULLION SPACING | | MULLION SPACING | | | MULLION SPACING | | |
| | 3'-6" OR LESS | > 3'-6" TO 5' | 3'-6" OR LESS | > 3'-6" TO 5' | > 5' TO 8' | 3'-6" OR LESS | > 3'-6" TO 5' | > 5' TO 8' |
| 135.0 | 5'-10" | 6'-11" | 7'-7" | 8'-9" | 7'-6" | 10'-8" | 10'-11" | 9'-4" |
| 140.0 | 5'-9" | 5'-11" | 7'-5" | 8'-8" | 7'-5" | 10'-7" | 10'-9" | 9'-3" |
| 145.0 | 5'-8" | 5'-10" | 7'-4" | 8'-7" | 7'-4" | 10'-5" | 10'-8" | 9'-1" |
| 150.0 | 5'-8" | 5'-9" | 7'-2" | 8'-5" | 7'-3" | 10'-4" | 10'-6" | 9'-0" |
| 155.0 | 5'-7" | 5'-8" | 7'-1" | 8'-4" | 7'-2" | 10'-2" | 10'-5" | 8'-11" |
| 160.0 | 5'-6" | 5'-8" | 7'-0" | 8'-3" | 7'-1" | 10'-1" | 10'-4" | 8'-10" |
| 165.0 | 5'-5" | 5'-7" | 6'-10" | 8'-2" | 7'-0" | 10'-0" | 10'-2" | 8'-9" |
| 170.0 | 5'-5" | 5'-6" | 6'-9" | 8'-1" | 6'-11" | 9'-11" | 10'-1" | 8'-8" |
| 175.0 | 5'-4" | 5'-6" | 6'-8" | 8'-0" | 6'-11" | 9'-10" | 10'-0" | 8'-7" |
| 180.0 | 5'-4" | 5'-5" | 6'-7" | 7'-11" | 6'-10" | 9'-8" | 9'-11" | 8'-6" |
| 185.0 | 5'-3" | 5'-4" | 6'-6" | 7'-11" | 6'-9" | 9'-7" | 9'-10" | 8'-5" |
| 190.0 | 5'-3" | 5'-4" | 6'-5" | 7'-10" | 6'-8" | 9'-6" | 9'-9" | 8'-4" |
| 195.0 | 5'-2" | 5'-3" | 6'-4" | 7'-9" | 6'-8" | 9'-5" | 9'-8" | 8'-3" |
| 200.0 | 5'-1" | 5'-3" | 6'-3" | 7'-8" | 6'-7" | 9'-4" | 9'-7" | 8'-2" |
| 205.0 | 5'-1" | 5'-2" | 6'-2" | 7'-7" | 6'-6" | 9'-4" | 9'-6" | 8'-2" |
| 210.0 | 5'-0" | 5'-2" | 6'-1" | 7'-7" | 6'-6" | 9'-3" | 9'-5" | 8'-1" |
| 215.0 | 5'-0" | 5'-1" | 6'-0" | 7'-6" | 6'-5" | 9'-2" | 9'-4" | 8'-0" |
| 220.0 | 5'-0" | 5'-1" | 5'-11" | 7'-5" | 6'-5" | 9'-1" | 9'-3" | 7'-11" |
| 226.3 | 4'-11" | 5'-0" | 5'-10" | 7'-5" | 6'-4" | 9'-0" | 9'-2" | 7'-10" |

PRODUCT REVISED
as complying with the Florida
Building Code
Acceptance No. 03-0106.09
Expiration Date 04/30/05
By
Miami Dade Product Control
Division

F.B.C.(H.V.H.Z.)/MIAMI-DADE COUNTY

JUL 29 2003


TILTECO INC.
TILLIT TESTING & ENGINEERING COMPANY
6695 N.W. 36th. St., Ste. 217, VIRGINIA GARDENS, FL 33166
Phone : (305)871-1530 . Fax : (305)871-1531
EB-0006719
WALTER A. TILLIT Jr., P. E.
FLORIDA Lic. # 44167


63 mm EXTRUDED ROLL-UP SHUTTER

**HOMESHIELD INDUSTRIES, INC.**
3585 E. 10th. COURT
HIALEAH, FLORIDA 33013

| REV. No | DESCRIPTION | DATE | REV. No | DESCRIPTION | DATE |
|---|---|---|---|---|---|
| 1 | OLD 97-245 | 11/11/02 | 3 | | |
| 2 | - | - | 4 | | |

SCALE: -
DATE: 11/11/02
DRAWING No: 02-530
SHEET 11 OF 14

# HEADER LOADING CHART

## MAXIMUM DESIGN PRESSURE RATING "W" (p. s. f.) AND CORRESPONDING MAXIMUM SPAN "L" (Ft.) FOR A GIVEN TYPE OF HEADER AND STORM BAR HEIGHT (Ft.)

(USE NEGATIVE PRESSURE VALUES AS PER ASCE 7-98)

| MAXIMUM DESIGN LOAD "W" (p.s.f.) | TYPE 1 HEADER 1 1/2" x 4" CHANNEL | | TYPE 2 HEADER 2" x 4 1/2" CHANNEL | | TYPE 3 HEADER 2" x 5" TUBE | | |
|---|---|---|---|---|---|---|---|
| | STORM BAR HEIGHT | | STORM BAR HEIGHT | | STORM BAR HEIGHT | | |
| | 5' OR LESS | > 5' TO 8' | 5' OR LESS | > 5' TO 8' | 5' OR LESS | > 5' TO 8' | > 8' TO 10' |
| 40.0 | 13'-6" | 10'-8" | 16'-0" | 13'-5" | 18'-0" | 16'-0" | 15'-2" |
| 45.0 | 12'-9" | 10'-1" | 15'-6" | 12'-8" | 17'-6" | 15'-6" | 14'-8" |
| 50.0 | 12'-1" | 9'-7" | 15'-1" | 12'-0" | 17'-0" | 15'-2" | 14'-2" |
| 55.0 | 11'-6" | 9'-1" | 14'-6" | 11'-5" | 16'-7" | 14'-9" | 13'-6" |
| 60.0 | 11'-1" | 8'-9" | 13'-10" | 10'-11" | 16'-3" | 14'-6" | 12'-11" |
| 65.0 | 10'-7" | 8'-5" | 13'-4" | 10'-6" | 15'-11" | 13'-11" | 12'-5" |
| 70.0 | 10'-3" | 8'-1" | 12'-10" | 10'-2" | 15'-8" | 13'-5" | 12'-0" |
| 75.0 | 9'-11" | 7'-10" | 12'-5" | 9'-10" | 15'-5" | 12'-11" | 11'-7" |
| 80.0 | 9'-7" | 7'-7" | 12'-0" | 9'-6" | 15'-2" | 12'-7" | 11'-3" |
| 85.0 | 9'-3" | 7'-4" | 11'-8" | 9'-2" | 14'-11" | 12'-2" | 10'-11" |
| 90.0 | 9'-0" | 7'-2" | 11'-4" | 8'-11" | 14'-8" | 11'-10" | 10'-7" |
| 95.0 | 8'-9" | 6'-11" | 11'-0" | 8'-8" | 14'-6" | 11'-6" | 10'-4" |
| 100.0 | 8'-7" | 6'-9" | 10'-9" | 8'-6" | 14'-2" | 11'-3" | 10'-0" |
| 105.0 | 8'-4" | 6'-7" | 10'-6" | 8'-3" | 13'-10" | 10'-11" | 9'-10" |
| 110.0 | 8'-2" | 6'-5" | 10'-3" | 8'-1" | 13'-6" | 10'-8" | 9'-7" |
| 115.0 | 8'-0" | 6'-4" | 10'-0" | 7'-11" | 13'-3" | 10'-6" | 9'-4" |
| 120.0 | 7'-10" | 6'-2" | 9'-10" | 7'-9" | 12'-11" | 10'-3" | 9'-2" |
| 125.0 | 7'-8" | 6'-1" | 9'-7" | 7'-7" | 12'-8" | 10'-0" | 9'-0" |
| 130.0 | 7'-6" | 5'-11" | 9'-5" | 7'-5" | 12'-5" | 9'-10" | 8'-10" |

| MAXIMUM DESIGN LOAD "W" (p.s.f.) | TYPE 1 HEADER 1 1/2" x 4" CHANNEL | | TYPE 2 HEADER 2" x 4 1/2" CHANNEL | | TYPE 3 HEADER 2" x 5" TUBE | | |
|---|---|---|---|---|---|---|---|
| | STORM BAR HEIGHT | | STORM BAR HEIGHT | | STORM BAR HEIGHT | | |
| | 5' OR LESS | > 5' TO 8' | 5' OR LESS | > 5' TO 8' | 5' OR LESS | > 5' TO 8' | > 8' TO 10' |
| 135.0 | 7'-4" | 5'-10" | 9'-3" | 7'-4" | 12'-3" | 9'-8" | 8'-8" |
| 140.0 | 7'-3" | 5'-9" | 9'-1" | 7'-2" | 12'-0" | 9'-6" | 8'-6" |
| 145.0 | 7'-1" | 5'-7" | 8'-11" | 7'-1" | 11'-9" | 9'-4" | 8'-4" |
| 150.0 | 7'-0" | 5'-6" | 8'-9" | 6'-11" | 11'-7" | 9'-2" | 8'-2" |
| 155.0 | 6'-10" | 5'-5" | 8'-7" | 6'-10" | 11'-5" | 9'-0" | 8'-1" |
| 160.0 | 6'-9" | 5'-4" | 8'-6" | 6'-9" | 11'-3" | 8'-11" | 8'-0" |
| 165.0 | 6'-8" | 5'-3" | 8'-4" | 6'-7" | 11'-1" | 8'-9" | 7'-10" |
| 170.0 | 6'-7" | 5'-2" | 8'-3" | 6'-6" | 10'-11" | 8'-7" | 7'-8" |
| 175.0 | 6'-6" | 5'-1" | 8'-1" | 6'-5" | 10'-9" | 8'-6" | 7'-7" |
| 180.0 | 6'-5" | 5'-0" | 8'-0" | 6'-4" | 10'-7" | 8'-4" | 7'-6" |
| 185.0 | 6'-3" | 5'-0" | 7'-11" | 6'-3" | 10'-5" | 8'-3" | 7'-5" |
| 190.0 | 6'-2" | 4'-11" | 7'-9" | 6'-2" | 10'-4" | 8'-2" | 7'-3" |
| 195.0 | 6'-2" | 4'-10" | 7'-8" | 6'-1" | 10'-2" | 8'-0" | 7'-2" |
| 200.0 | 6'-1" | 4'-9" | 7'-7" | 6'-0" | 10'-0" | 7'-11" | 7'-1" |
| 205.0 | 6'-0" | 4'-9" | 7'-6" | 5'-11" | 9'-11" | 7'-10" | 7'-0" |
| 210.0 | 5'-11" | 4'-8" | 7'-5" | 5'-10" | 9'-10" | 7'-9" | 6'-11" |
| 215.0 | 5'-10" | 4'-7" | 7'-4" | 5'-9" | 9'-8" | 7'-8" | 6'-10" |
| 220.0 | 5'-9" | 4'-7" | 7'-3" | 5'-9" | 9'-7" | 7'-7" | 6'-9" |
| 226.3 | 5'-8" | 4'-6" | 7'-2" | 5'-8" | 9'-5" | 7'-5" | 6'-8" |

PRODUCT REVISED
as complying with the Florida
Building Code
Acceptance No. 03-0106.09
Expiration Date 04/30/06
By
Miami Dade Product Control
Division

F.B.C.(H.V.H.Z.)/MIAMI-DADE COUNTY

JUL 29 2003


TILTECO INC.
TILLIT TESTING & ENGINEERING COMPANY
6595 N.W. 36th. St., Ste. 217, VIRGINIA GARDENS, Fl. 33166
Phone : (305)871-1530 . Fax : (305)871-1531
EB-0006719
WALTER A. TILLIT Jr., P. E.
FLORIDA Lic. # 44167


63 mm EXTRUDED ROLL-UP SHUTTER

**HOMESHIELD INDUSTRIES, INC.**
3585 E. 10th. COURT
HIALEAH, FLORIDA 33013

| REV. No | DESCRIPTION | DATE | REV. No | DESCRIPTION | DATE |
|---|---|---|---|---|---|
| 1 | OLD 97-245 | 11/11/02 | 3 | | |
| 2 | - | - | 4 | | |

SCALE: -
DATE: 11/11/02
DRAWING No: 02-530
SHEET 12 OF 14

# STORM BAR LOADING CHART

## MAXIMUM DESIGN PRESSURE RATING "W" (p. s. f.) AND CORRESPONDING MAXIMUM SPAN "L" FOR A GIVEN TYPE OF STORM BAR AND STORM BAR SPACING. (USE NEGATIVE PRESSURE VALUES AS PER ASCE 7-98)

| MAXIMUM DESIGN LOAD "W" (p.s.f.) | TYPE 1 STORM BAR .750" x 2.875" EXTRUDED | | | TYPE 2 STORM BAR 2" x 1.812" EXTRUDED | | | TYPE 3 STORM BAR 2" x 2 1/2" EXTRUDED | | | TYPE 4 STORM BAR 2" x 4" x .250" EXTRUDED | | |
|---|---|---|---|---|---|---|---|---|---|---|---|---|
| | STORM BAR SPACING * | | | STORM BAR SPACING * | | | STORM BAR SPACING * | | | STORM BAR SPACING * | | |
| | 3' OR LESS | > 3' TO 4' | > 4' TO 5' | 3' OR LESS | > 3' TO 4' | > 4' TO 5' | 3' OR LESS | > 3' TO 4' | > 4' TO 5' | 3' OR LESS | > 3' TO 4' | > 4' TO 5' |
| 40.0 | 7'-3" | 7'-3" | 6'-8" | 5'-9" | 5'-9" | 5'-9" | 7'-8" | 7'-8" | 7'-6" | 9'-7" | 9'-7" | 9'-7" |
| 45.0 | 7'-3" | 7'-0" | 6'-3" | 5'-9" | 5'-9" | 5'-9" | 7'-8" | 7'-8" | 7'-4" | 9'-7" | 9'-7" | 9'-7" |
| 50.0 | 7'-3" | 6'-8" | 5'-11" | 5'-9" | 5'-9" | 5'-9" | 7'-8" | 7'-6" | 7'-1" | 9'-7" | 9'-7" | 9'-7" |
| 55.0 | 7'-3" | 6'-4" | 5'-8" | 5'-9" | 5'-9" | 5'-9" | 7'-8" | 7'-4" | 6'-11" | 9'-7" | 9'-7" | 9'-7" |
| 60.0 | 7'-0" | 6'-1" | 5'-5" | 5'-9" | 5'-9" | 5'-9" | 7'-8" | 7'-2" | 6'-10" | 9'-7" | 9'-7" | 9'-5" |
| 65.0 | 6'-9" | 5'-10" | 5'-3" | 5'-9" | 5'-9" | 5'-8" | 7'-7" | 7'-1" | 6'-8" | 9'-7" | 9'-7" | 9'-3" |
| 70.0 | 6'-6" | 5'-7" | 5'-0" | 5'-9" | 5'-9" | 5'-7" | 7'-5" | 7'-0" | 6'-6" | 9'-7" | 9'-7" | 9'-1" |
| 75.0 | 6'-3" | 5'-5" | 4'-10" | 5'-9" | 5'-9" | 5'-5" | 7'-4" | 6'-11" | 6'-5" | 9'-7" | 9'-5" | 8'-11" |
| 80.0 | 6'-1" | 5'-3" | 4'-8" | 5'-9" | 5'-8" | 5'-3" | 7'-2" | 6'-10" | 6'-2" | 9'-7" | 9'-3" | 8'-9" |
| 85.0 | 5'-11" | 5'-1" | 4'-7" | 5'-9" | 5'-7" | 5'-1" | 7'-1" | 6'-8" | 6'-0" | 9'-7" | 9'-1" | 8'-8" |
| 90.0 | 5'-9" | 4'-11" | 4'-5" | 5'-9" | 5'-6" | 4'-11" | 7'-0" | 6'-7" | 5'-10" | 9'-7" | 9'-0" | 8'-6" |
| 95.0 | 5'-7" | 4'-10" | 4'-4" | 5'-9" | 5'-5" | 4'-10" | 6'-11" | 6'-6" | 5'-8" | 9'-6" | 8'-10" | 8'-5" |
| 100.0 | 5'-5" | 4'-8" | 4'-2" | 5'-9" | 5'-3" | 4'-8" | 6'-10" | 6'-4" | 5'-6" | 9'-5" | 8'-9" | 8'-3" |
| 105.0 | 5'-4" | 4'-7" | 4'-1" | 5'-8" | 5'-1" | 4'-7" | 6'-9" | 6'-2" | 5'-5" | 9'-4" | 8'-8" | 8'-2" |
| 110.0 | 5'-2" | 4'-6" | 4'-0" | 5'-8" | 5'-0" | 4'-6" | 6'-8" | 6'-0" | 5'-3" | 9'-2" | 8'-7" | 7'-11" |
| 115.0 | 5'-1" | 4'-5" | 3'-11" | 5'-7" | 4'-11" | 4'-5" | 6'-7" | 5'-11" | 5'-2" | 9'-1" | 8'-6" | 7'-9" |
| 120.0 | 4'-11" | 4'-4" | 3'-10" | 5'-6" | 4'-9" | 4'-3" | 6'-6" | 5'-9" | 5'-1" | 9'-0" | 8'-4" | 7'-7" |
| 125.0 | 4'-10" | 4'-2" | 3'-9" | 5'-5" | 4'-8" | 4'-2" | 6'-5" | 5'-8" | 4'-11" | 8'-11" | 8'-3" | 7'-6" |
| 130.0 | 4'-9" | 4'-1" | 3'-8" | 5'-4" | 4'-7" | 4'-1" | 6'-3" | 5'-6" | 4'-10" | 8'-10" | 8'-2" | 7'-4" |
| 135.0 | 4'-8" | 4'-1" | 3'-7" | 5'-3" | 4'-6" | 4'-0" | 6'-2" | 5'-4" | 4'-9" | 8'-9" | 8'-0" | 7'-2" |
| 140.0 | 4'-7" | 4'-0" | 3'-7" | 5'-1" | 4'-5" | 4'-0" | 6'-0" | 5'-3" | 4'-8" | 8'-8" | 7'-11" | 7'-1" |
| 145.0 | 4'-6" | 3'-11" | 3'-6" | 5'-0" | 4'-4" | 3'-11" | 5'-11" | 5'-2" | 4'-7" | 8'-7" | 7'-9" | 6'-11" |
| 150.0 | 4'-5" | 3'-10" | 3'-5" | 4'-11" | 4'-3" | 3'-10" | 5'-10" | 5'-1" | 4'-6" | 8'-6" | 7'-7" | 6'-10" |
| 155.0 | 4'-4" | 3'-9" | 3'-5" | 4'-10" | 4'-3" | 3'-9" | 5'-9" | 5'-0" | 4'-5" | 8'-5" | 7'-6" | 6'-8" |
| 160.0 | 4'-4" | 3'-9" | 3'-4" | 4'-9" | 4'-2" | 3'-9" | 5'-8" | 4'-11" | 4'-5" | 8'-4" | 7'-4" | 6'-7" |
| 165.0 | 4'-3" | 3'-8" | 3'-3" | 4'-9" | 4'-1" | 3'-8" | 5'-7" | 4'-10" | 4'-4" | 8'-4" | 7'-3" | 6'-6" |
| 170.0 | 4'-2" | 3'-7" | 3'-3" | 4'-8" | 4'-0" | 3'-7" | 5'-6" | 4'-9" | 4'-3" | 8'-3" | 7'-2" | 6'-5" |
| 175.0 | 4'-1" | 3'-7" | 3'-2" | 4'-7" | 4'-0" | 3'-7" | 5'-5" | 4'-8" | 4'-2" | 8'-2" | 7'-1" | 6'-4" |
| 180.0 | 4'-1" | 3'-6" | 3'-2" | 4'-6" | 3'-11" | 3'-6" | 5'-4" | 4'-7" | 4'-2" | 8'-0" | 6'-11" | 6'-3" |
| 185.0 | 4'-0" | 3'-5" | 3'-1" | 4'-5" | 3'-10" | 3'-5" | 5'-3" | 4'-7" | 4'-1" | 7'-11" | 6'-10" | 6'-2" |
| 190.0 | 3'-11" | 3'-5" | 3'-1" | 4'-5" | 3'-10" | 3'-5" | 5'-2" | 4'-6" | 4'-0" | 7'-10" | 6'-9" | 6'-1" |
| 195.0 | 3'-11" | 3'-4" | 3'-0" | 4'-4" | 3'-9" | 3'-4" | 5'-1" | 4'-5" | 4'-0" | 7'-9" | 6'-8" | 6'-0" |
| 200.0 | 3'-10" | 3'-4" | 3'-0" | 4'-3" | 3'-9" | 3'-4" | 5'-1" | 4'-5" | 3'-11" | 7'-7" | 6'-7" | 5'-11" |
| 205.0 | 3'-10" | 3'-4" | 2'-11" | 4'-3" | 3'-8" | 3'-3" | 5'-0" | 4'-4" | 3'-10" | 7'-6" | 6'-6" | 5'-10" |
| 210.0 | 3'-9" | 3'-3" | 2'-11" | 4'-2" | 3'-7" | 3'-3" | 4'-11" | 4'-3" | 3'-10" | 7'-5" | 6'-5" | 5'-9" |
| 215.0 | 3'-8" | 3'-2" | 2'-10" | 4'-2" | 3'-7" | 3'-2" | 4'-11" | 4'-3" | 3'-9" | 7'-4" | 6'-4" | 5'-8" |
| 220.0 | 3'-8" | 3'-2" | 2'-10" | 4'-1" | 3'-6" | 3'-2" | 4'-10" | 4'-2" | 3'-9" | 7'-3" | 6'-3" | 5'-8" |
| 226.3 | 3'-7" | 3'-2" | 2'-10" | 4'-0" | 3'-6" | 3'-1" | 4'-9" | 4'-1" | 3'-8" | 7'-2" | 6'-2" | 5'-7" |

* STORM BAR SPACING SHALL BE SUCH THAT MAXIMUM SLAT SPAN SHALL NOT BE EXCEEDED.

PRODUCT REVISED
as complying with the Florida Building Code
Acceptance No. 03-0106.09
Expiration Date 04/30/06
By
Miami Dade Product Control Division

F.B.C.(H.V.H.Z.)/MIAMI-DADE COUNTY

JUL 29 2003


TILTECO INC.
TILLIT TESTING & ENGINEERING COMPANY
6595 N.W. 36th. St., Ste. 217, VIRGINIA GARDENS, Fl. 33166
Phone : (305)871-1530 . Fax : (305)871-1531
EB-0006719
WALTER A. TILLIT Jr., P. E.
FLORIDA Lic. # 44167


63 mm EXTRUDED ROLL-UP SHUTTER

**HOMESHIELD INDUSTRIES, INC.**
3585 E. 10th. COURT
HIALEAH, FLORIDA 33013

| REV. No | DESCRIPTION | DATE | REV. No | DESCRIPTION | DATE |
|---|---|---|---|---|---|
| 1 | OLD 97-245 | 11/11/02 | 3 | | |
| 2 | - | - | 4 | | |

SCALE: -
DATE: 11/11/02
DRAWING No: 02-530
SHEET 13 OF 14

## SIDE RAIL ANCHOR SCHEDULE

MAXIMUM DESIGN PRESSURE RATING "W" (p. s. f.) AND CORRESPONDING MAXIMUM ANCHOR SPACING (in) SCHEDULE FOR SIDE RAILS Ⓑ , Ⓒ , Ⓓ & Ⓔ CONNECTION TO C. B. S.

(USE NEGATIVE PRESSURE VALUES AS PER ASCE 7-98)

| MASONRY |
|---|
| POURED CONCRETE |

SUBSTRATE LEGEND

| MAXIMUM DESIGN LOAD "W" (p.s.f.) | Ⓑ | | | Ⓒ | | | Ⓓ & Ⓔ | | |
|---|---|---|---|---|---|---|---|---|---|
| | WALL MOUNT | SIDE WALL MOUNT | BUILD-OUT | WALL MOUNT | SIDE WALL MOUNT | BUILD-OUT | WALL MOUNT | SIDE WALL MOUNT | BUILD-OUT |
| 80.0 OR LESS | 6" | 6" | 6" | 6" | 6" | 6" | 6" | 6" | 6" |
| | 6" | 6" | 6" | 6" | 6" | 6" | 6" | 6" | 6" |
| >80.0 TO 150.0 | 5 1/2" | 5 1/2" | 6" | 4" | 6" | 6" | – | – | – |
| | 6" | 6" | 6" | 6" | 6" | 6" | – | – | – |
| >150.0 TO 226.3 | 3 1/2" | 4" | 4 1/2" | 2 1/2" | 4 1/2" | 4 1/2" | – | – | – |
| | 6" | 6" | 6" | 6" | 6" | 6" | – | – | – |

## MAXIMUM ANCHOR SPACING (in.) AT SIDE RAILS VERSUS EDGE DISTANCE = E. D.

MAXIMUM SIDE RAILS SPACINGS SHOWN ON THIS SHEET ARE VALID FOR 3 1/2" EDGE DISTANCE. FOR E. D. LESS THAN 3 1/2", REDUCE ANCHOR SPACING BY MULTIPLYING SPACINGS SHOWN ON THAT SHEET BY THE FOLLOWING FACTORS.

| ACTUAL E. D.= EDGE DISTANCE | FACTOR |
|---|---|
| 3" | .86 |
| 2 1/2" | .71 |
| 2" | .50 |

PRODUCT REVISED
as complying with the Florida Building Code
Acceptance No. 03-0106.09
Expiration Date 09/30/06
By
Miami Dade Product Control Division

F.B.C.(H.V.H.Z.)/MIAMI-DADE COUNTY

JUL 29 2003

TILTECO INC.
TILLIT TESTING & ENGINEERING COMPANY
6595 N.W. 36th. St., Ste. 217, VIRGINIA GARDENS, Fl. 33166
Phone : (305)871-1530 . Fax : (305)871-1531
EB-0006719
WALTER A. TILLIT Jr., P. E.
FLORIDA Lic. # 44167

63 mm EXTRUDED ROLL-UP SHUTTER

HOMESHIELD INDUSTRIES, INC.
3585 E. 10th. COURT
HIALEAH, FLORIDA 33013

| REV. No | DESCRIPTION | DATE | REV. No | DESCRIPTION | DATE |
|---|---|---|---|---|---|
| 1 | OLD 97-245 | 11/11/02 | 3 | | |
| 2 | – | – | 4 | | |

SCALE –
DATE 11/11/02
DRAWING No 02-530
SHEET 14 OF 14