MIAMI-DADE

BUILDING CODE COMPLIANCE OFFICE (BCCO)
PRODUCT CONTROL DIVISION

MIAMI-DADE COUNTY, FLORIDA
METRO-DADE FLAGLER BUILDING
140 WEST FLAGLER STREET, SUITE 1603
MIAMI, FLORIDA 33130-1563
(305) 375-2901 FAX (305) 375-2908

NOTICE OF ACCEPTANCE (NOA)

Alluroll Shutter Systems, Inc.
4747 SW 75th Ave.
Miami, FL 33155

SCOPE:

This NOA is being issued under the applicable rules and regulations governing the use of construction materials. The documentation submitted has been reviewed by Miami-Dade County Product Control Division and accepted by the Board of Rules and Appeals (BORA) to be used in Miami Dade County and other areas where allowed by the Authority Having Jurisdiction (AHJ).

This NOA shall not be valid after the expiration date stated below. The Miami-Dade County Product Control Division (In Miami Dade County) and/or the AHJ (in areas other than Miami Dade County) reserve the right to have this product or material tested for quality assurance purposes. If this product or material fails to perform in the accepted manner, the manufacturer will incur the expense of such testing and the AHJ may immediately revoke, modify, or suspend the use of such product or material within their jurisdiction. BORA reserves the right to revoke this acceptance, if it is determined by Miami-Dade County Product Control Division that this product or material fails to meet the requirements of the applicable building code.
This product is approved as described herein, and has been designed to comply with the High Velocity Hurricane Zone of the Florida Building Code.

DESCRIPTION: Extruded Aluminum Roll-Up Shutter

APPROVAL DOCUMENT: Drawing No. 02-513, titled "Roll-Up Shutters", prepared by Tilteco, Inc. dated 11/08/02, with last revision on 11/08/02, sheets 1 through 10 of 10, bearing the Miami-Dade County Product Control Revision stamp with the Notice of Acceptance number and expiration date by the Miami-Dade County Product Control Division.

MISSILE IMPACT RATING: Large and Small Missile Impact

LABELING: Each unit shall bear a permanent label with the manufacturer's name or logo, city, state and the following statement: "Miami-Dade County Product Control Approved", unless otherwise noted herein.

RENEWAL of this NOA shall be considered after a renewal application has been filed and there has been no change in the applicable building code negatively affecting the performance of this product.

TERMINATION of this NOA will occur after the expiration date or if there has been a revision or change in the materials, use, and/or manufacture of the product or process. Misuse of this NOA as an endorsement of any product, for sales, advertising or any other purposes shall automatically terminate this NOA. Failure to comply with any section of this NOA shall be cause for termination and removal of NOA.

ADVERTISEMENT: The NOA number preceded by the words Miami-Dade County, Florida, and followed by the expiration date may be displayed in advertising literature. If any portion of the NOA is displayed, then it shall be done in its entirety.

INSPECTION: A copy of this entire NOA shall be provided to the user by the manufacturer or its distributors and shall be available for inspection at the job site at the request of the Building Official.
This NOA **revises NOA # 00-0417.08** and consists of this page 1 as well as approval document mentioned above.
The submitted documentation was reviewed by **Candido F. Font, P.E.**

07/10/03

PRODUCT CONTROL ACCEPTED

Aluroll Shutter Systems, Inc.

NOTICE OF ACCEPTANCE: EVIDENCE SUBMITTED

(For File ONLY. Not part of NOA)

A. DRAWING

1. Drawing No. 02-513, "Roll-Up Shutters", Sheets 1 through 10 of 10, prepared by Tilteco, Inc., dated 11/08/02, revised on 11/08/02, signed and sealed by Walter A. Tillit Jr., PE.

B. TEST

1. Test report on Uniform Static Air Pressure Test per PA 202, Large Missile Impact Test per PA 201 and Cyclic Loading Wind Pressure Test per PA 203 of Aluminum Roll-Up Shutters prepared by Miami Testing Laboratory, Inc. Report No. MTL-16803, dated 10/16/96, signed and sealed by D. G. Ober, PE.

C. CALCULATIONS

1. Comparative analysis for slats; storm bars, headers and anchors using rational analysis, pages 1 through 33 of 33, prepared by Tilteco Inc., signed and sealed by W. A. Tillit Jr., PE.

D. MATERIAL CERTIFICATION

1. Certification of Compliance prepared by Eastern Metal Supply, for Extruded Slat 6063-T6, without dated, signed by J. J. Nachtsheim.
2. Tensile Test Report No MTS 257723 for Sheet Aluminum Samples, prepared by Center For Applied Engineering, Inc. dated 07/16/96, signed and sealed by J. M. Bridenstine, PE.

E. STATEMENTS

1. Engineering active letter issued by Tilteco Inc. on 06/06/2000, signed and sealed by W. A. Tillit Jr. PE.
2. No financial interest letter issued by Tilteco, Inc. on 01/03/97, signed and sealed by W. A. Tillit Jr, PE.
3. Letter of Common Application issued by Aluroll Shutter Systems, Inc. on 12/20/96, signed by K. Ruemmele.
4. No change letter issued by Aluroll Shutter Systems, Inc. on 03/22/2000, signed by K. Ruemmele.

Candido F. Font, P. E.
Senior Product Control Examiner
NOA No 03-0106.11
Expiration Date: July 03, 2008
Approval Date: July 10, 2003

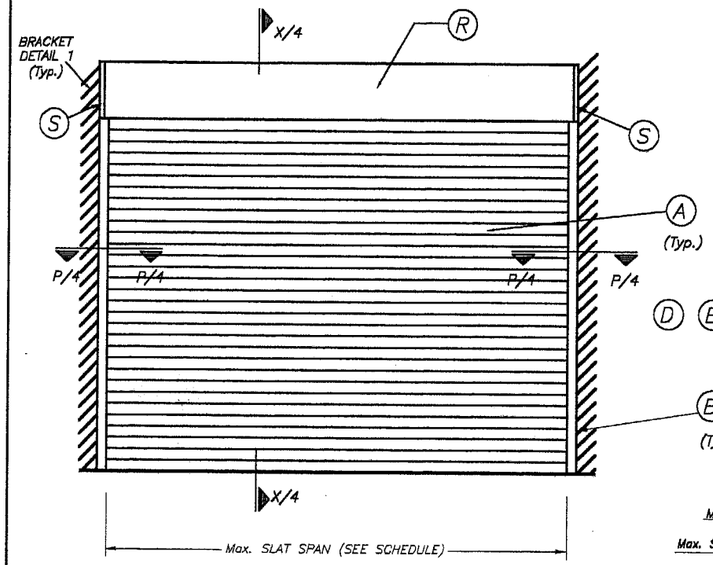

TYPICAL SINGLE UNIT ELEVATION (NO STORM BARS REQUIRED)

NOTE: SEE SHEET 2 & 3 OF 10 FOR COMPONENTS NOMENCLATURE.

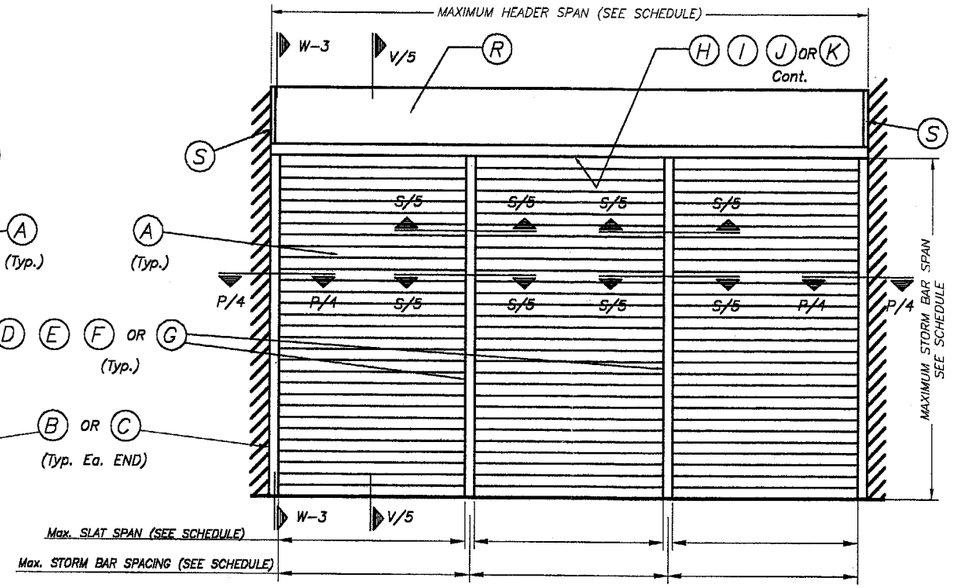

TYPICAL MULTIPLE UNIT ELEVATION (STORM BARS REQUIRED)

NOTE: SEE SHEET 2 & 3 OF 10 FOR COMPONENTS NOMENCLATURE.

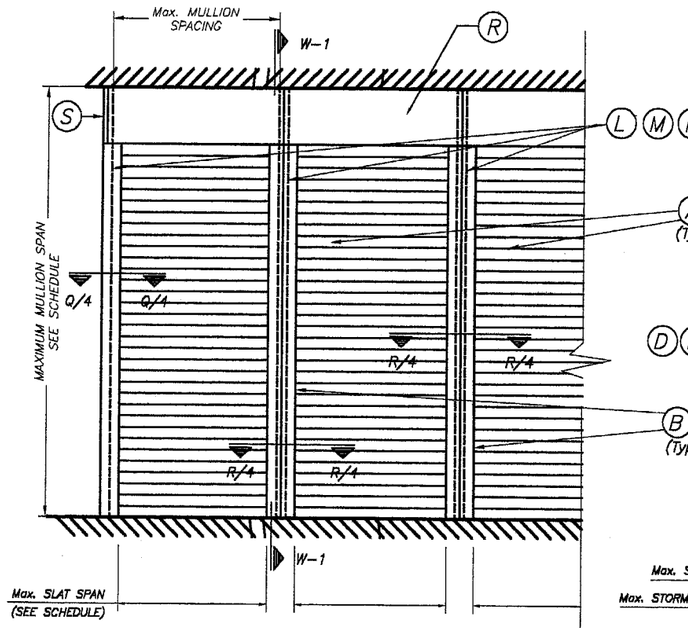

TYPICAL CONSECUTIVE SINGLE UNIT ELEVATION (NO STORM BARS REQUIRED)

NOTE: SEE SHEET 2 & 3 OF 10 FOR COMPONENTS NOMENCLATURE.

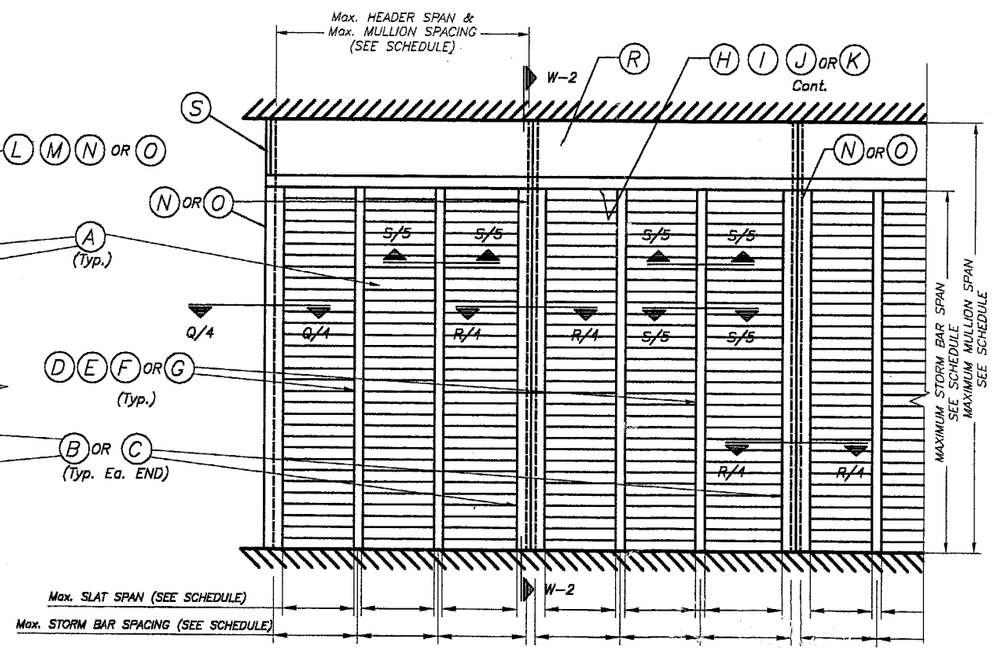

TYPICAL CONSECUTIVE MULTIPLE UNIT ELEVATION (STORM BARS REQUIRED)

NOTE: SEE SHEET 2 & 3 OF 10 FOR COMPONENTS NOMENCLATURE.

GENERAL NOTES:

1. ROLL-UP SHUTTERS SHOWN ON THIS PRODUCT APPROVAL DOCUMENT (P.A.D.) HAS BEEN VERIFIED FOR COMPLIANCE IN ACCORDANCE WITH THE 2001 EDITION OF THE FLORIDA BUILDING CODE.
DESIGN WIND LOADS SHALL BE DETERMINED AS PER SECTION 1619 OF THE ABOVE MENTIONED CODE, FOR A BASIC WIND SPEED OF 146 m.p.h., AND IN ACCORDANCE W/ ASCE 7-98 STANDARD.
ROLL-UP SHUTTER'S ADEQUACY FOR IMPACT AND FATIGUE RESISTANCE HAS BEEN VERIFIED IN ACCORDANCE WITH SECTION 1606.1.4 OF THE ABOVE MENTIONED CODE AS PER MIAMI TESTING LAB. TEST REPORT #16803 & CENTER FOR APPLIED ENGINNERING, INC. TEST REPORT #257723 AS PER PA-201, PA-202 & PA-203.

2. ALL ALUMINUM EXTRUSIONS SHALL BE 6063-T6 ALLOY (UNLESS OTHERWISE NOTED).

3. ALL SCREWS TO BE STAINLESS STEEL 304 OR 316 SERIES W/ 50 ksi YIELD POINT AND 90 ksi TENSILE STRENGTH.

4. BOLTS TO BE 2024-T4 ALUMINUM ALLOY, GALVANIZED OR STAINLESS STEEL WITH 36 ksi MINIMUM YIELD POINT.

5. STORM BARS SHALL REMAIN IN PLACE AT ALL TIMES.

6. ANCHORS TO WALL SHALL BE AS FOLLOWS: (UNLESS OTHERWISE NOTED)
(A) TO EXISTING POURED CONCRETE: f'c = 3 ksi Min.
-1/4" ø TAPCON ANCHORS AS MANUFACTURED BY I.T.W./BUILDEX OR ELCO TEXTRON.
NOTES:
A.1) MINIMUM EMBEDMENT OF CONCRETE ANCHORS INTO CONCRETE UNIT SHALL BE 1 3/4". NO EMBEDMENT INTO STUCCO SHALL BE CONSIDERED AS PART OF THE REQUIRED EMBEDMENT.
A.2) IN CASE THAT PRECAST STONE, PRECAST CONCRETE PANELS, OR PAVERS BE FOUND ON THE EXISTING WALL OR FLOOR, ANCHORS SHALL BE LONG ENOUGH TO REACH THE MAIN STRUCTURE BEHIND SUCH PANELS. MINIMUM PENETRATION SHALL BE 1 3/4".

(B) TO EXISTING CONCRETE BLOCK WALL:
-1/4" ø TAPCON ANCHORS, AS MANUFACTURED BY I.T.W./BUILDEX OR ELCO TEXTRON.
NOTES:
B.1) MINIMUM EMBEDMENT OF TAPCON ANCHORS, INTO CONCRETE BLOCK UNIT SHALL BE 1 1/4".
B.2) IN CASE THAT PRECAST STONE OR PRECAST CONCRETE PANELS BE FOUND ON THE EXISTING WALL, ANCHORS SHALL BE LONG ENOUGH TO REACH THE MAIN STRUCTURE BEHIND SUCH PANELS. ANCHORAGE SHALL BE 1 1/4" MINIMUM.

(C) ANCHORS REQUIRED FOR STORM BARS, HEADERS & MULLION CONNECTIONS SHALL BE AS SPECIFIED ON APPLICABLE SECTIONS SHOWN ON SHEETS 4, 5 & 6 OF 10 RESPECTIVELY.
POWER BOLTS AS MANUFACTURED BY POWERS FASTENING, INC.
TAPCON ANCHORS & RED HEAD SLEEVE ANCHORS AS MANUFACTURED BY I.T.W./BUILDEX OR ELCO TEXTRON.

(D) ANCHORS SHALL BE INSTALLED FOLLOWING ALL OF THE RECOMMENDATIONS AND SPECIFICATIONS OF THE ANCHOR'S MANUFACTURER.

7. IT SHALL BE THE RESPONSIBILITY OF THE CONTRACTOR TO VERIFY THE SOUNDNESS OF THE STRUCTURE WHERE SHUTTER IS TO BE ATTACHED TO INSURE PROPER ANCHORAGE.

8. SHUTTER MANUFACTURER'S STAMP SHALL BE PLACED ON THE EXPOSED SURFACE OF THE SIDE RAIL APROXIMATELY 4" ABOVE THE BOTTOM OF SUCH RAIL.
STAMP SHALL READ AS FOLLOWS:
ROLL-UP SHUTTER
ALUROLL SHUTTER SYSTEMS, INC.
MIAMI, FLORIDA
MIAMI-DADE COUNTY PRODUCT CONTROL APPROVED.

9. ROLL-UP MECHANISM NOT PART OF THIS APPROVAL.

10. (A) THIS PRODUCT APPROVAL DOCUMENT (P.A.D.) PREPARED BY THIS ENGINEER IS GENERIC AND DOES NOT PROVIDE INFORMATION FOR A SITE SPECIFIC PROJECT; i.e. WHERE THE SITE CONDITIONS DEVIATE FROM THE P.A.D.

(B) CONTRACTOR TO BE RESPONSIBLE FOR THE SELECTION, PURCHASE AND INSTALLATION INCLUIDING LIFE SAFETY OF THIS PRODUCT BASED ON THIS P.A.D. PROVIDED HE/SHE DOES NOT DEVIATE FROM THE CONDITIONS DETAILED ON THIS DOCUMENT. CONSTRUCTION SAFETY AT SITE IS THE CONTRACTOR'S RESPONSIBILITY.

(C) THIS PRODUCT APPROVAL DOCUMENT WILL BE CONSIDERED INVALID IF MODIFIED.

(D) SITE SPECIFIC PROJECTS SHALL BE PREPARED BY A FLORIDA REGISTERED ENGINEER OR ARCHITECT WHICH WILL BECOME THE PROFESSIONAL OF RECORD (P.O.R) FOR THE PROJECT AND WHO WILL BE RESPONSIBLE FOR THE PROPER USE OF THE P.A.D.

(E) THIS P.A.D. SHALL COMPLY WITH SECTION 2: 61G15 OF THE FLORIDA ADMINISTRATIVE CODE.

11. ONCE ALL COMPONENTS HAVE BEEN CHOSEN, CHECK FOR COMPLIANCE WITH SECTION 1612.1.9 OF THE FLORIDA BUILDING CODE 2001.

PRODUCT REVISED
as complying with the Florida Building Code
Acceptance No 03-0606.11
Expiration Date 07/03/08
By:
Miami Dade Product Control Division

F.B.C. (H.V.H.Z.) / MIAMI-DADE COUNTY

JUN 02 2003

TILTECO INC.
TILLIT TESTING & ENGINEERING COMPANY
6595 N.W. 36th. St., Ste. 217, VIRGINIA GARDENS, Fl. 33166
Phone : (305)871-1530 . Fax : (305)871-1531
EB-0006719
WALTER A. TILLIT Jr. P. E.
FLORIDA Lic. # 44167

ROLL-UP SHUTTER

ALUROLL SHUTTER SYSTEMS, INC.
4747 S.W. 75 AVE.
MIAMI, FLORIDA 33155

REV. No	DESCRIPTION	DATE	REV. No	DESCRIPTION	DATE
1	OLD 96-387	11/08/02	3		
2	-	-	4		

AS SHOWN SCALE

11/08/02 DATE

02-513 DRAWING No

SHEET 1 OF 10

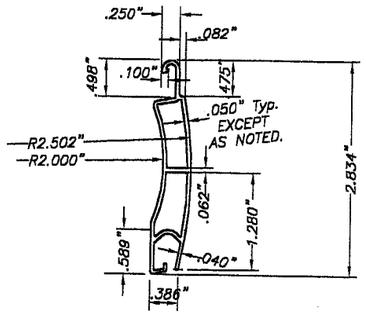

(A) TYPE 1 SLAT:

EXTRUDED ALUMINUM SLAT (DIE DRAWING N° 44189)
6063-T6 ALUMINUM ALLOY
SCALE: 1/2" = 1"

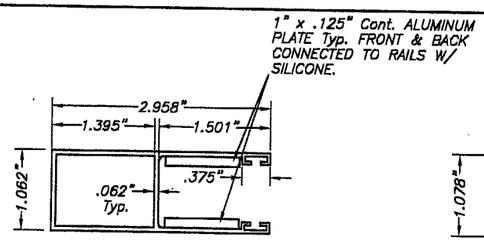

(B) TYPE 1 SIDE RAIL:

6063-T6 Alum. ALLOY
SCALE: 1/2" = 1"

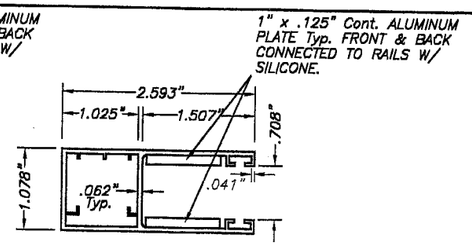

(C) TYPE 2 SIDE RAIL:

6063-T6 Alum. ALLOY
SCALE: 1/2" = 1"

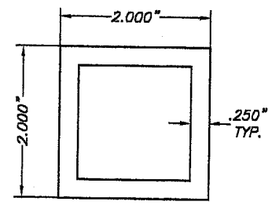

(D) TYPE 1 STORM BAR:

2" EXTRUDED STORM BAR
6063-T6 ALUMINUM ALLOY
SCALE: 1/2" = 1"

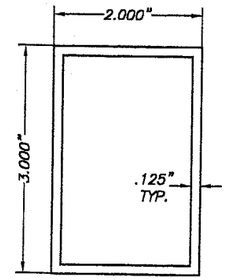

(E) TYPE 2 STORM BAR:

3" EXTRUDED STORM BAR
6063-T6 ALUMINUM ALLOY
SCALE: 1/2" = 1"

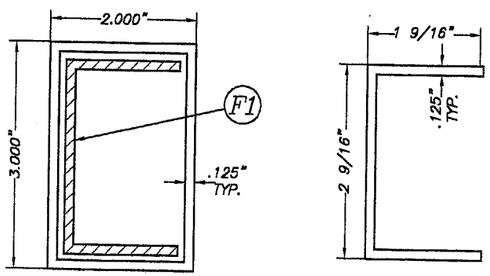

(F1) 1 9/16" x 2 9/16" x .125"
ZINC PLATED STEEL INSERT
ASTM A-36 DESIGNATION
SCALE: 1/2" = 1"

(F) TYPE 3 STORM BAR:

3" EXTRUDED STORM BAR W/ (F1)
6063-T6 ALUMINUM ALLOY
SCALE: 1/2" = 1"

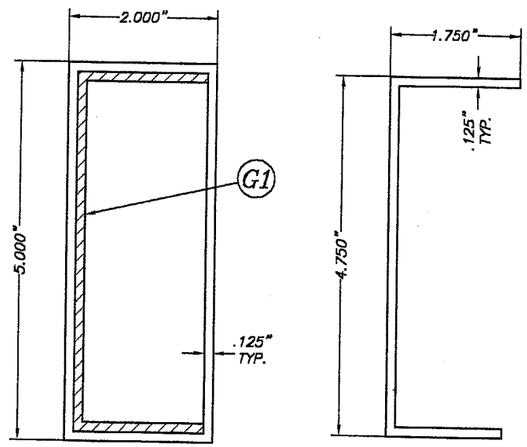

(G1) 1 3/4" x 4 3/4" x .125"
ZINC PLATED STEEL INSERT
ASTM A-36 DESIGNATION
SCALE: 1/2" = 1"

(G) TYPE 4 STORM BAR:

5" EXTRUDED STORM BAR W/ (G1)
6063-T6 ALUMINUM ALLOY
SCALE: 1/2" = 1"

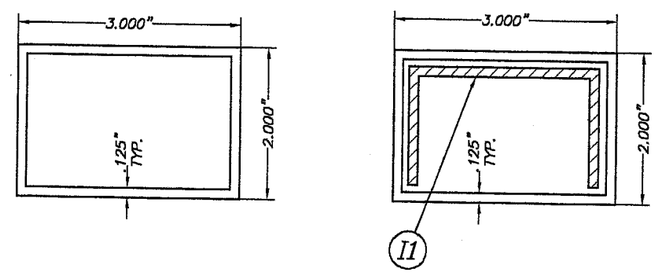

(H) TYPE 1 HEADER:

6063-T6 ALUMINUM ALLOY
SCALE: 1/2" = 1"

(I1) 1 9/16" x 2 9/16" x .125"
ZINC PLATED STEEL INSERT
ASTM A-36 DESIGNATION
SCALE: 1/2" = 1"

(I) TYPE 2 HEADER:

3" EXTRUDED HEADER W/ (I1)
6063-T6 ALUMINUM ALLOY
SCALE: 1/2" = 1"

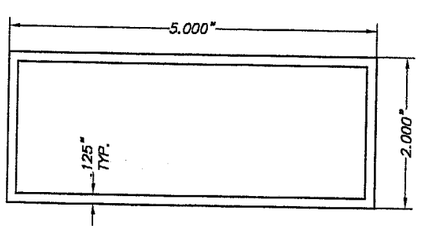

(J) TYPE 3 HEADER:

5" EXTRUDED HEADER
6063-T6 ALUMINUM ALLOY
SCALE: 1/2" = 1"

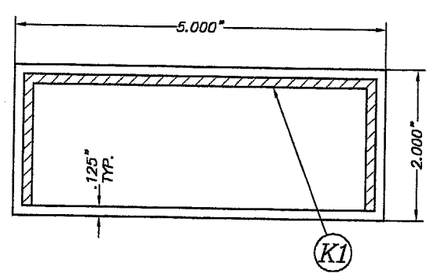

(K) TYPE 4 HEADER:

5" EXTRUDED HEADER W/ (K1)
6063-T6 ALUMINUM ALLOY
SCALE: 1/2" = 1"

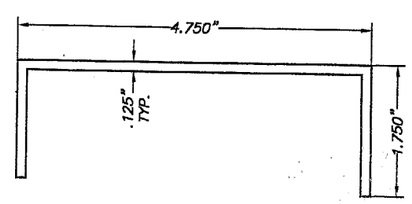

(K1) 1 3/4" x 4 3/4" x .125"
ZINC PLATED STEEL INSERT
ASTM A-36 DESIGNATION
SCALE: 1/2" = 1"

PRODUCT REVISED
as complying with the Florida Building Code
Acceptance No. 03-0106.11
Expiration Date 07/03/08
By
Miami Dade Product Control Division

JUN 02 2003

F.B.C. (H.V.H.Z.) / MIAMI-DADE COUNTY

TILTECO INC.
TILLIT TESTING & ENGINEERING COMPANY
6695 N.W. 36th. St., Ste. 217, VIRGINIA GARDENS, FL 33166
Phone : (305)871-1530 . Fax : (305)871-1531
EB-0006719
WALTER A. TILLIT Jr. P. E.
FLORIDA Lic. # 44167

ROLL-UP SHUTTER

ALUROLL SHUTTER SYSTEMS, INC.
4747 S.W. 75 AVE.
MIAMI, FLORIDA 33155

REV. No	DESCRIPTION	DATE	REV. No	DESCRIPTION	DATE
1	OLD 96-387	11/08/02	3		
2	–	–	4		

AS SHOWN SCALE
11/08/02 DATE
02-513 DRAWING No
SHEET 2 OF 10

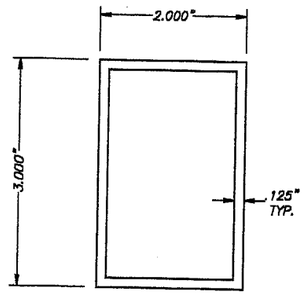

(L) TYPE 1 MULLION:
3" EXTRUDED MULLION
6063-T6 ALUMINUM ALLOY
SCALE: 1/2" = 1"

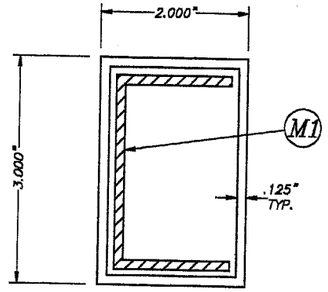

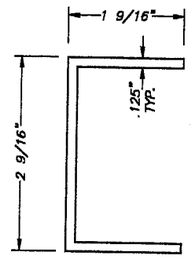

(M1) 1 9/16" x 2 9/16" x .125"
ZINC PLATED STEEL INSERT
ASTM A-36 DESIGNATION
SCALE: 1/2" = 1"

(M) TYPE 2 MULLION:
3" EXTRUDED MULLION
W/ (M1)
6063-T6 ALUMINUM ALLOY
SCALE: 1/2" = 1"

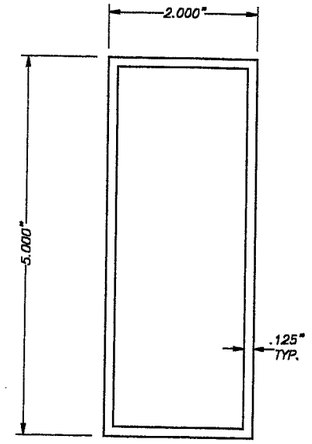

(N) TYPE 3 MULLION:
5" EXTRUDED MULLION
6063-T6 ALUMINUM ALLOY
SCALE: 1/2" = 1"

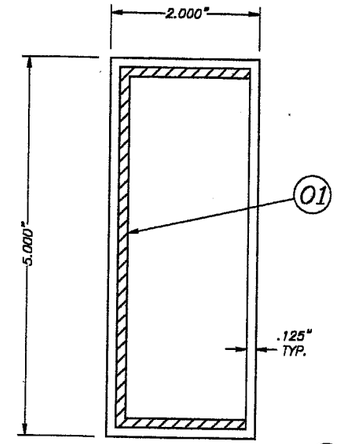

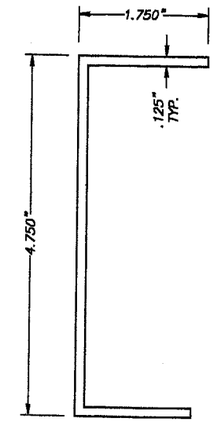

(O1) 1 3/4" x 4 3/4" x .125"
ZINC PLATED STEEL INSERT
ASTM A-36 DESIGNATION
SCALE: 1/2" = 1"

(O) TYPE 4 MULLION
5" EXTRUDED MULLION
W/ (O1)
6063-T6 ALUMINUM ALLOY
SCALE: 1/2" = 1"

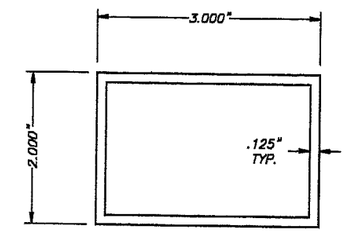

(P) TYPE 1 BUILD-OUT TUBE:
3" x 2" EXTRUDED TUBE
6063-T6 ALUMINUM ALLOY
SCALE: 1/2" = 1"

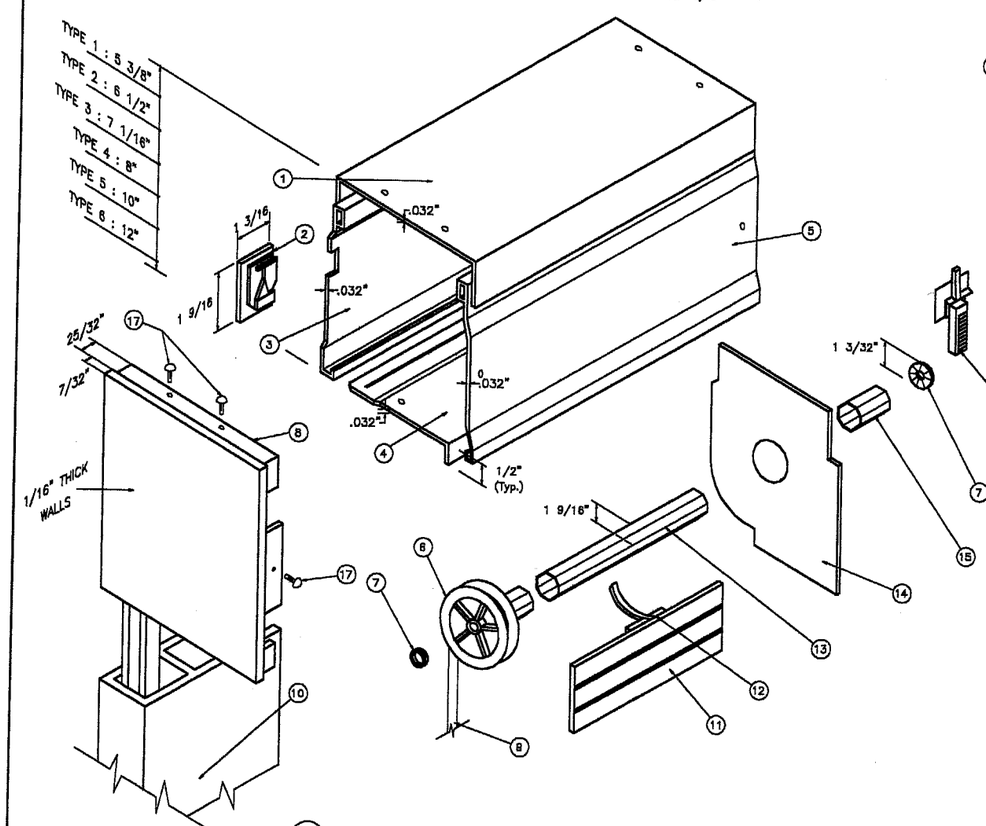

(R) BOX COMPONENTS AND ASSEMBLY DETAIL

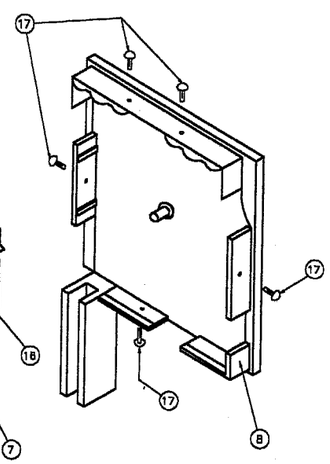

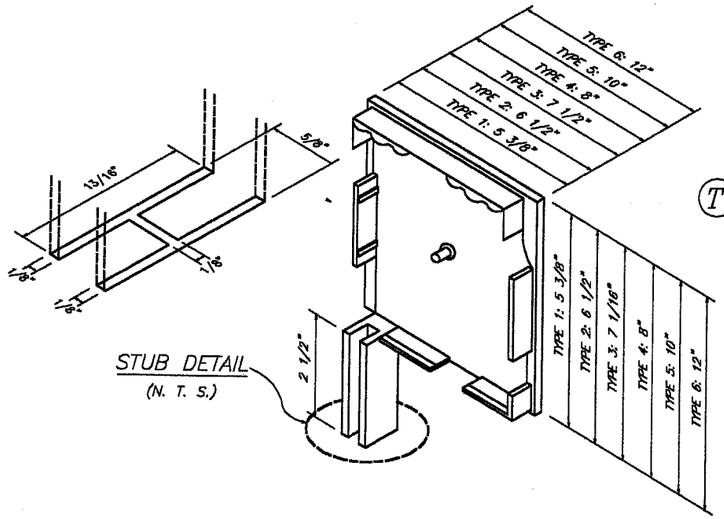

(S) BOX SIDE BRACKET TYPES

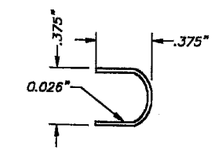

(T) ZINC PLATED STEEL INSERT FOR SLATS.
ASTM A-36 DESIGNATION
W/ G-90 GALVANIZED
SCALE: 1" = 1"

1. TOP PROFILE 3005-H28 ALLOY.
2. BOTTOM LEADER W/PLUSH.
3. REAR PROFILE 3005-H28 ALLOY.
4. BOTTOM PROFILE 3005-H28 ALLOY.
5. COVER PROFILE 3005-H28 ALLOY.
6. NYLON DISK: 4 1/4" O. D.
7. ROLLING CUSHION W/BALLS.
8. BOX SIDE BRACKET: CAST ALUMINUM.
9. RIBBON: 17/32" WIDE.
10. SIDE RAIL.
11. SLAT.
12. EXTRUDED ALUMINUM DRAWING HOOP.
13. GALVANIZED STEEL DRUM: 1 9/16" O. D. x 0.032" Thk.
14. RETAINING METAL PLATE: 26 Ga. Galv. Stl. AT EACH END.
15. NYLON FERRULE: 1 17/32" O. D. x 0.045" Thk. x 3 5/16" Long.
16. NYLON FUNNEL.
17. SCREWS: # 4 x 1/2" S. S.

PRODUCT REVISED
as complying with the Florida Building Code
Acceptance No. 03-0106.11
Expiration Date 07/03/08
By
Miami Dade Product Control Division

F.B.C. (H.V.H.Z.) / MIAMI-DADE COUNTY

TILTECO INC.
TILLIT TESTING & ENGINEERING COMPANY
6595 N.W. 36th. St., Ste. 217, VIRGINIA GARDENS, FL 33166
Phone : (305)871-1530 . Fax : (305)871-1531
EB-0006719
WALTER A. TILLIT Jr. P. E.
FLORIDA Lic. # 44167

ROLL-UP SHUTTER

ALUROLL SHUTTER SYSTEMS, INC.
4747 S.W. 75 AVE.
MIAMI, FLORIDA 33155

REV. No	DESCRIPTION	DATE	REV. No	DESCRIPTION	DATE
1	OLD 98-387	11/08/02	3		
2	–	–	4		

AS SHOWN SCALE
11/08/02 DATE
02-513 DRAWING No
SHEET 3 OF 10

JUN 02 2003

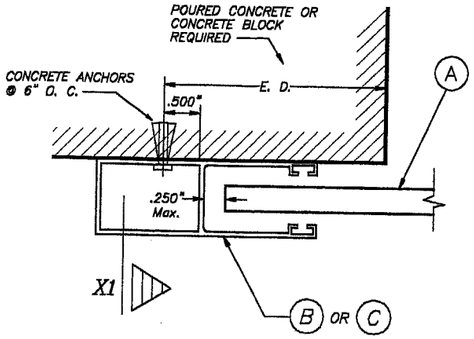

SECTION P – P (1) : WALL MOUNT

SCALE: FULL

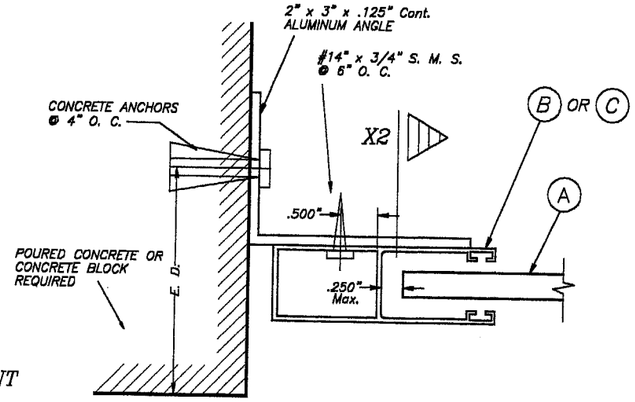

SECTION P – P (2) : SIDE WALL MOUNT

SCALE: 1/2" = 1"

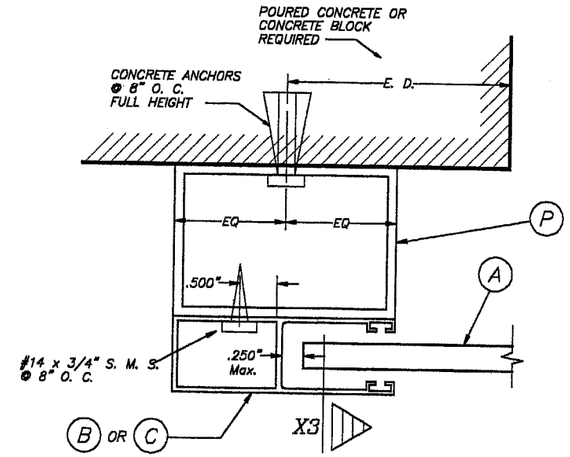

SECTION P – P (3) : BUILD-OUT

SCALE: 1/2" = 1"

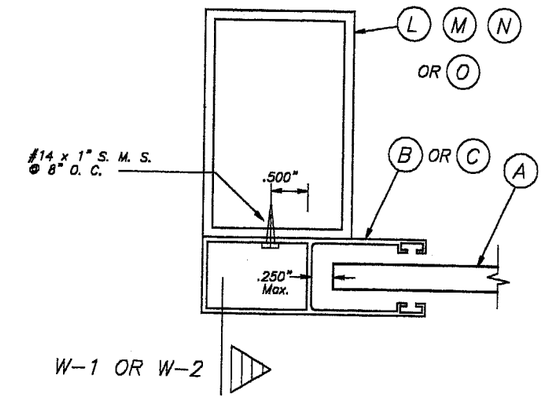

SECTION Q – Q : MULLION MOUNT

SCALE: 1/2" = 1"

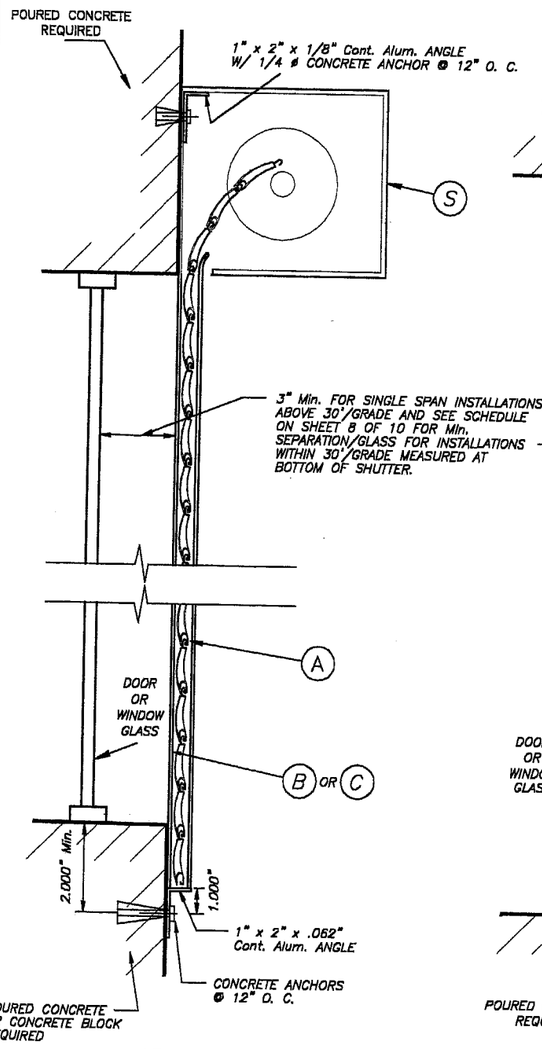

SECTION X – X (1)

N. T. S.

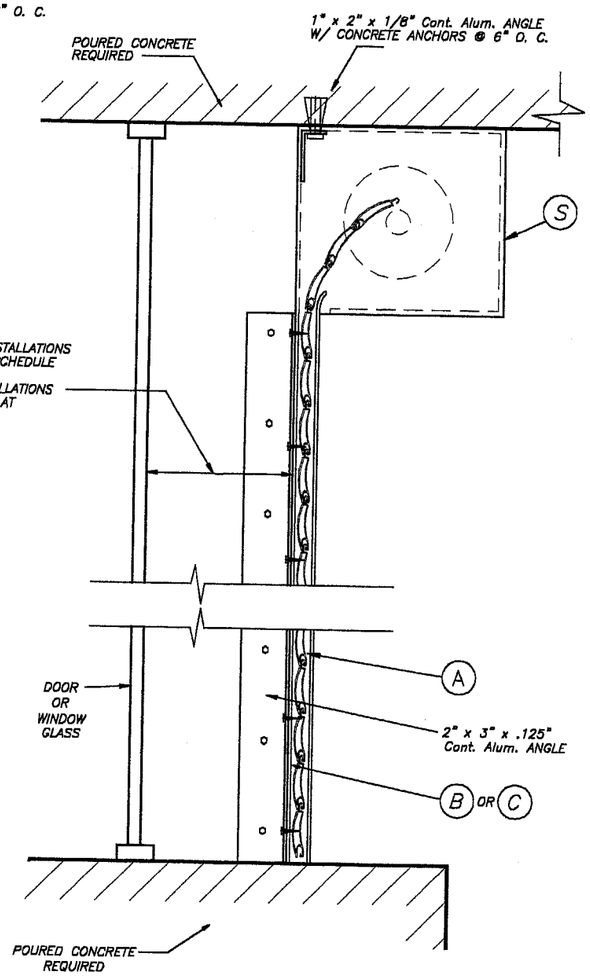

SECTION X –X (2)

N. T. S.

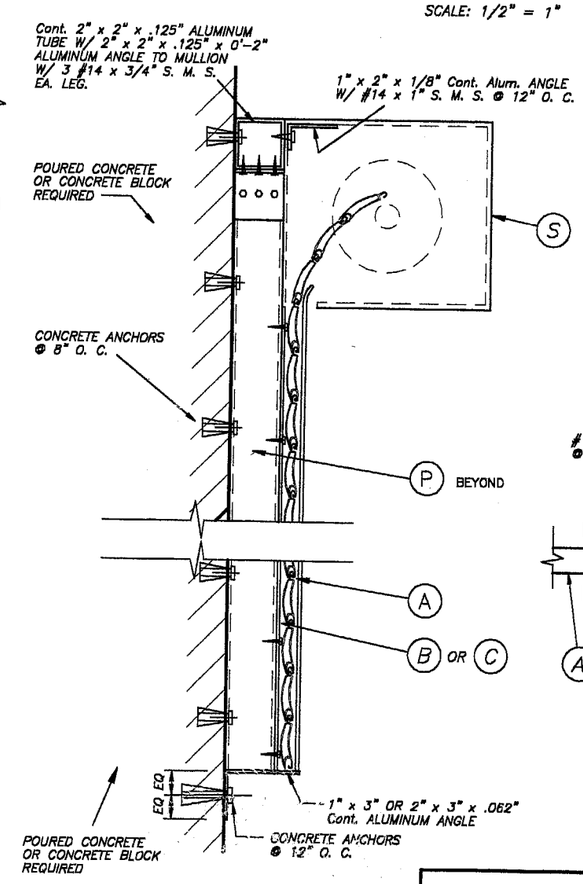

SECTION X – X (3)

N. T. S.

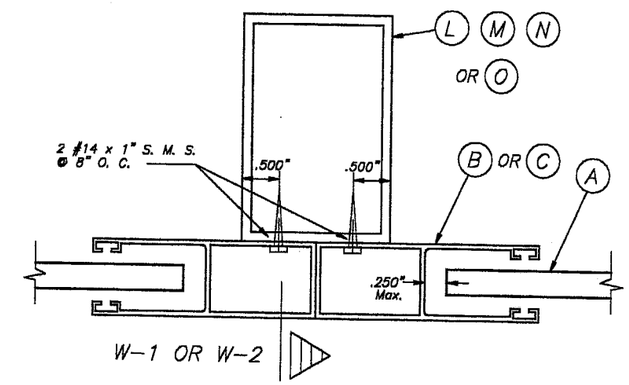

SECTION R – R : MULLION MOUNT (FRONT)

SCALE: 1/2" = 1"

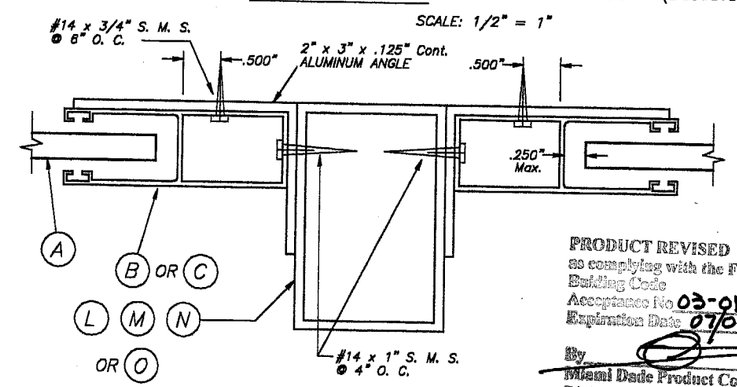

SECTION R – R : MULLION MOUNT (SIDE)

SCALE: 1/2" = 1"

PRODUCT REVISED
as complying with the Florida Building Code
Acceptance No 03-0106.11
Expiration Date 07/03/08
By
Miami Dade Product Control Division

F.B.C. (H.V.H.Z.) / MIAMI-DADE COUNTY

JUN 02 2003

TILTECO INC.
TILLIT TESTING & ENGINEERING COMPANY
6595 N.W. 36th. St., Ste. 217, VIRGINIA GARDENS, Fl. 33166
Phone : (305)871-1530 . Fax : (305)871-1531
EB-0006719
WALTER A. TILLIT Jr. P. E.
FLORIDA Lic. # 44167

ROLL-UP SHUTTER

ALUROLL SHUTTER SYSTEMS, INC.
4747 S.W. 75 AVE.
MIAMI, FLORIDA 33155

REV. No	DESCRIPTION	DATE	REV. No	DESCRIPTION	DATE
1	OLD 98-387	11/08/02	3		
2	–	–	4		

AS SHOWN SCALE

11/08/02 DATE

02-513 DRAWING No

SHEET 4 OF 10

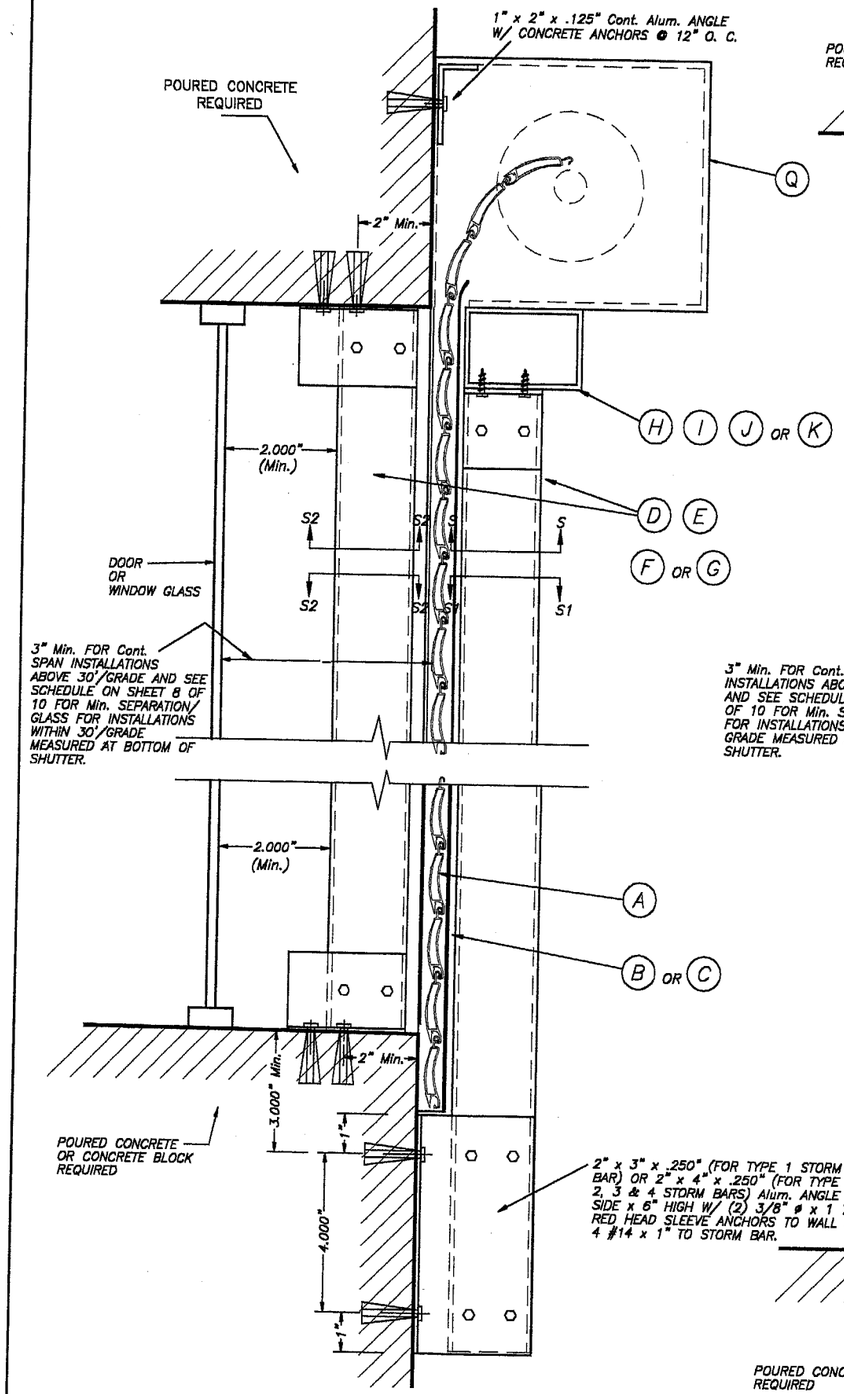

WALL MOUNTING : SECTION V – V (1)

N. T. S.

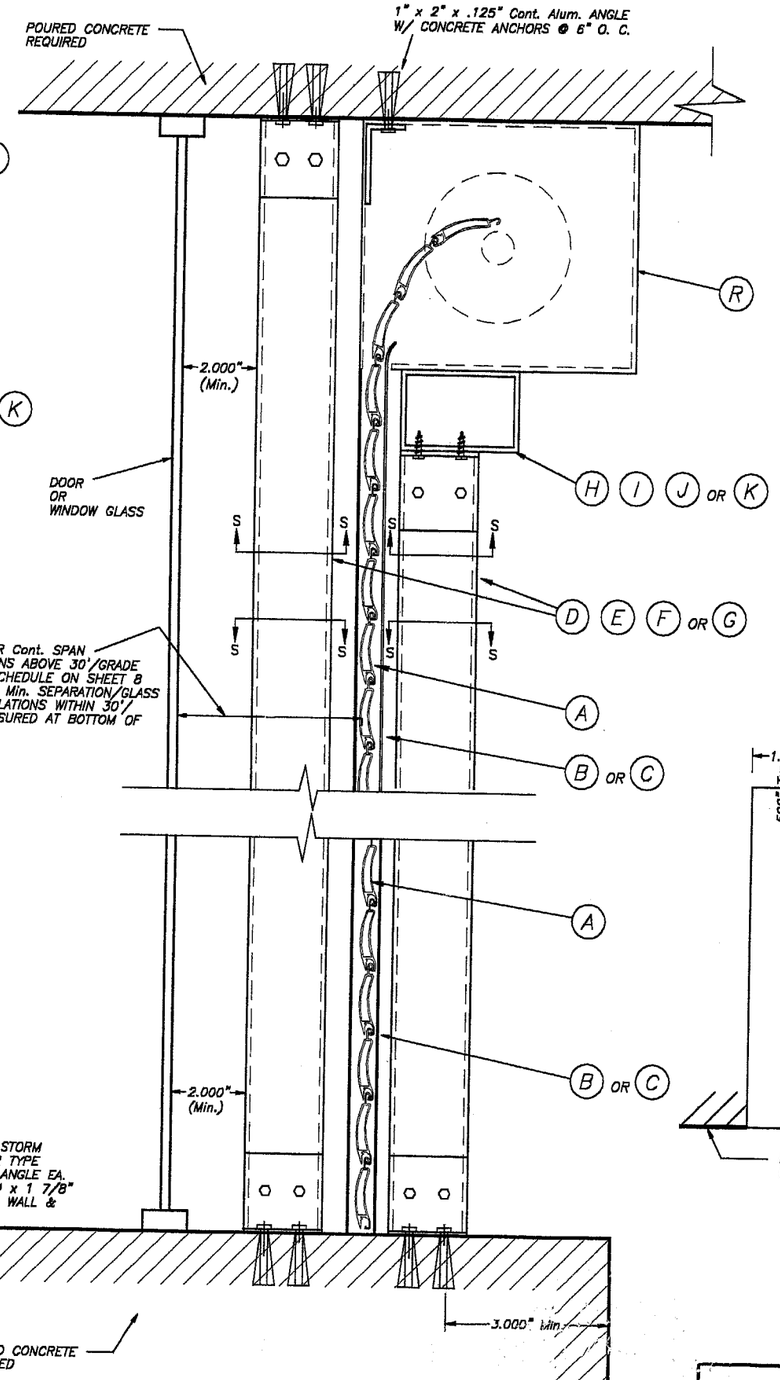

CEILING & FLOOR MOUNTING : SECTION V – V (2)

N. T. S.

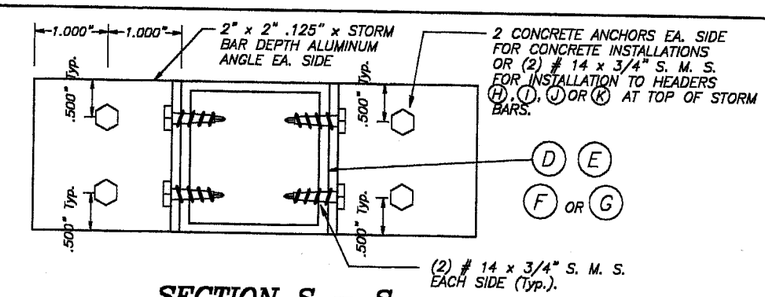

SECTION S – S

SCALE : 1/2" = 1"

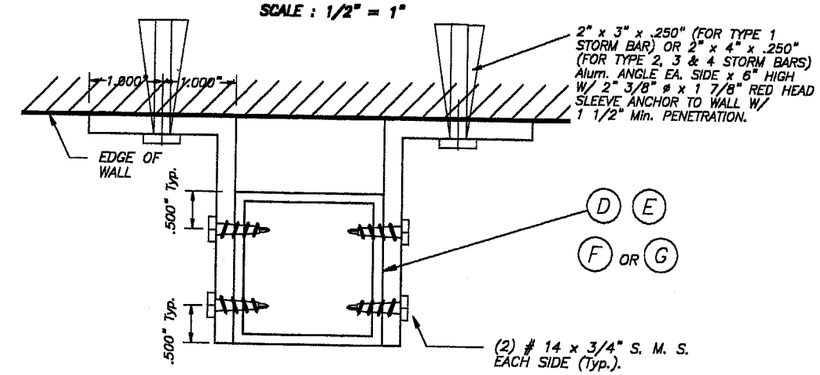

SECTION S1 – S1

SCALE : 1/2" = 1"

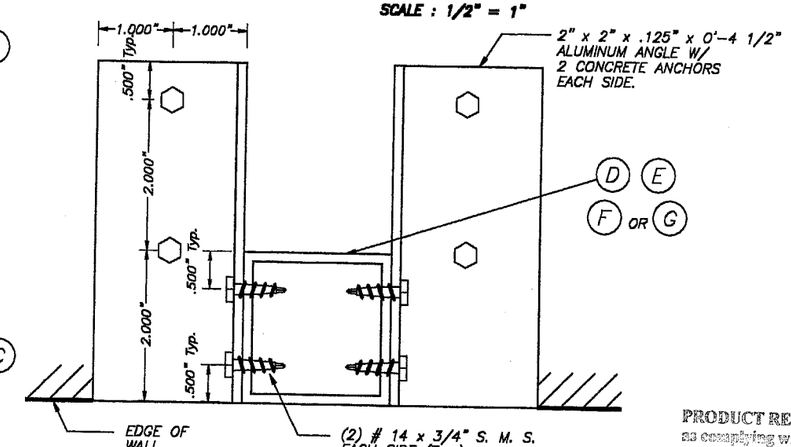

SECTION S2 – S2

SCALE : 1/2" = 1"

PRODUCT REVISED
as complying with the Florida Building Code
Acceptance No 03-0106.11
Expiration Date 01/03/08
By
Miami Dade Product Control Division

JUN 02 2003

F.B.C. (H.V.H.Z.) / MIAMI–DADE COUNTY

TILLECO INC.
TILLIT TESTING & ENGINEERING COMPANY
8595 N.W. 36th. St., Ste. 217, VIRGINIA GARDENS, Fl. 33166
Phone : (305)871–1530 . Fax : (305)871–1531
EB–0006719
WALTER A. TILLIT Jr. P. E.
FLORIDA Lic. # 44167

ROLL–UP SHUTTER

ALUROLL SHUTTER SYSTEMS, INC.
4747 S.W. 75 AVE.
MIAMI, FLORIDA 33155

REV. No	DESCRIPTION	DATE	REV. No	DESCRIPTION	DATE
1	OLD 98–387	11/08/02	3		
2	–	–	4		

AS SHOWN SCALE

11/08/02 DATE

02–513 DRAWING No

SHEET 5 OF 10

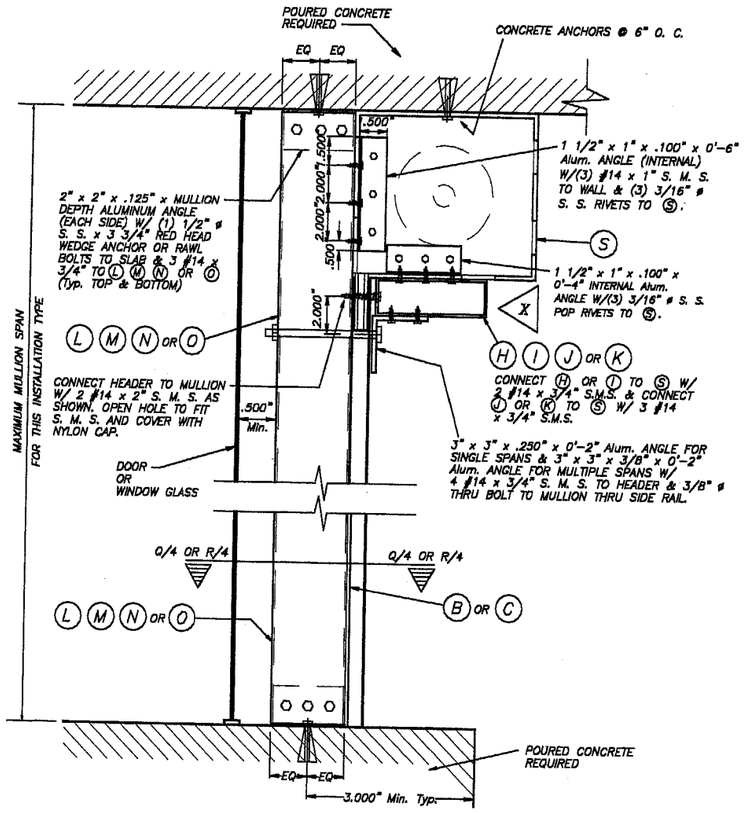

FLOOR/CEILING MOUNTING :

SECTION W – W (1) & W – W (2)

SCALE : 1/8" = 1"

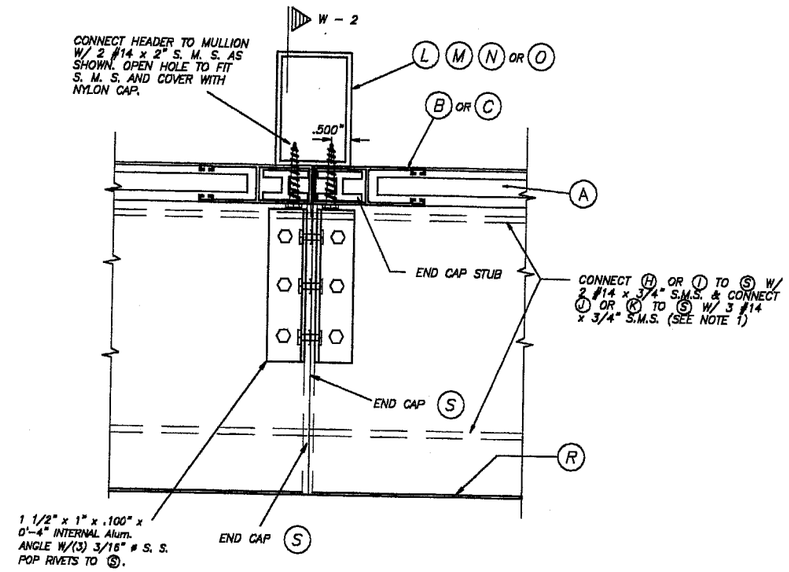

PLAN 1

SCALE : 1/4" = 1"

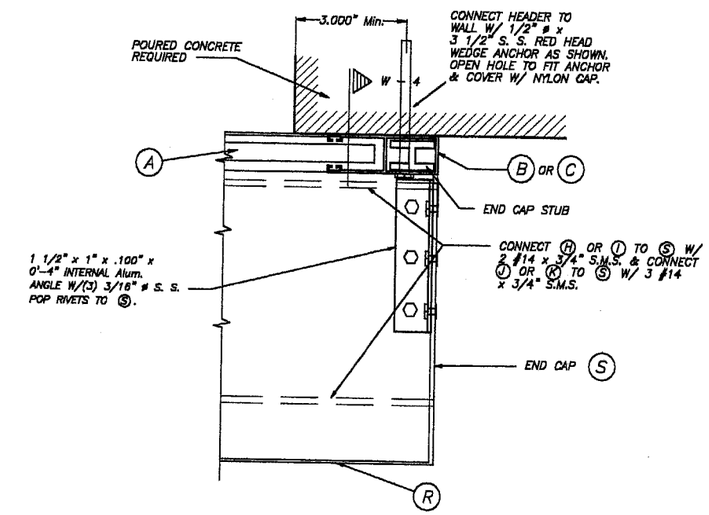

PLAN 2

SCALE : 1/4" = 1"

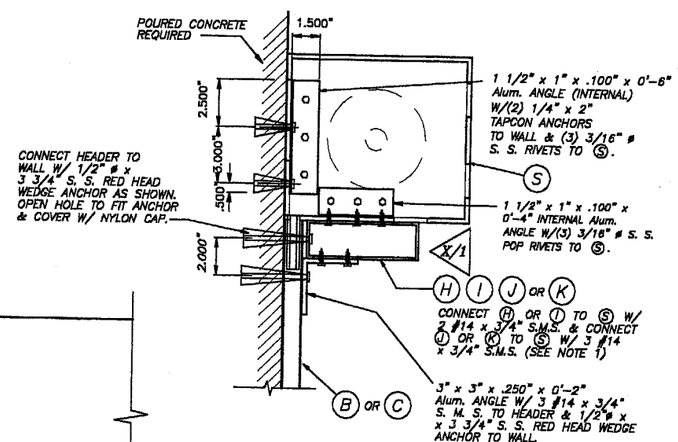

WALL MOUNTING :

SECTION W – W (3)

SCALE : 1/8" = 1"

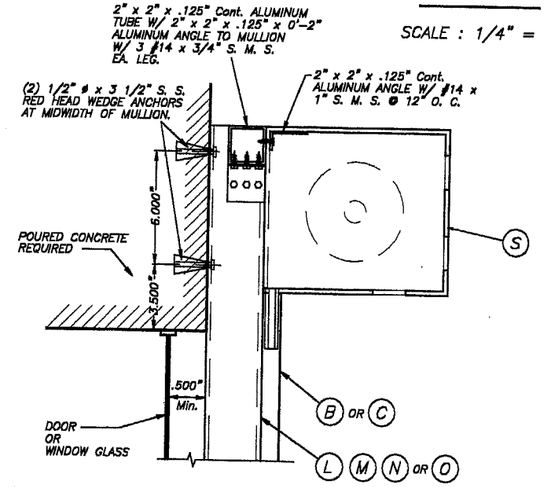

WALL MOUNTING AT TOP

SCALE : 1/8" = 1"

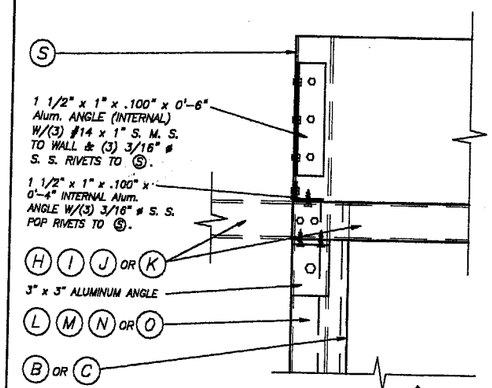

ELEVATION X

SCALE : 1/8" = 1"

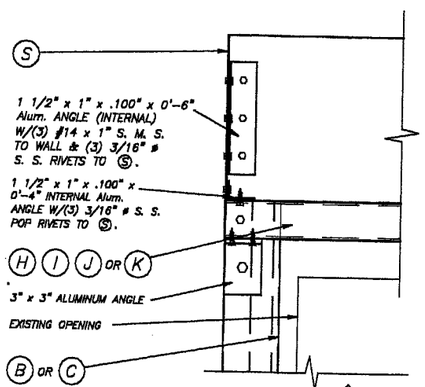

ELEVATION X1

SCALE : 1/8" = 1"

PRODUCT REVISED
as complying with the Florida Building Code
Acceptance No 03-0106.11
Expiration Date 07/03/08
By
Miami Dade Product Control Division

F.B.C. (H.V.H.Z.) / MIAMI–DADE COUNTY

JUN 02 2003

TILTECO INC.
TILLIT TESTING & ENGINEERING COMPANY
5595 N.W. 36th. St., Ste. 217, VIRGINIA GARDENS, FL 33166
Phone : (305)871-1530 . Fax : (305)871-1531
EB-0006719
WALTER A. TILLIT Jr. P. E.
FLORIDA Lic. # 44167

ROLL–UP SHUTTER

ALUROLL SHUTTER SYSTEMS, INC.
4747 S.W. 75 AVE.
MIAMI, FLORIDA 33155

REV. No	DESCRIPTION	DATE	REV. No	DESCRIPTION	DATE
1	OLD 98-387	11/08/02	3		
2	–	–	4		

AS SHOWN SCALE

11/08/02 DATE

02–513 DRAWING No

SHEET 6 OF 10

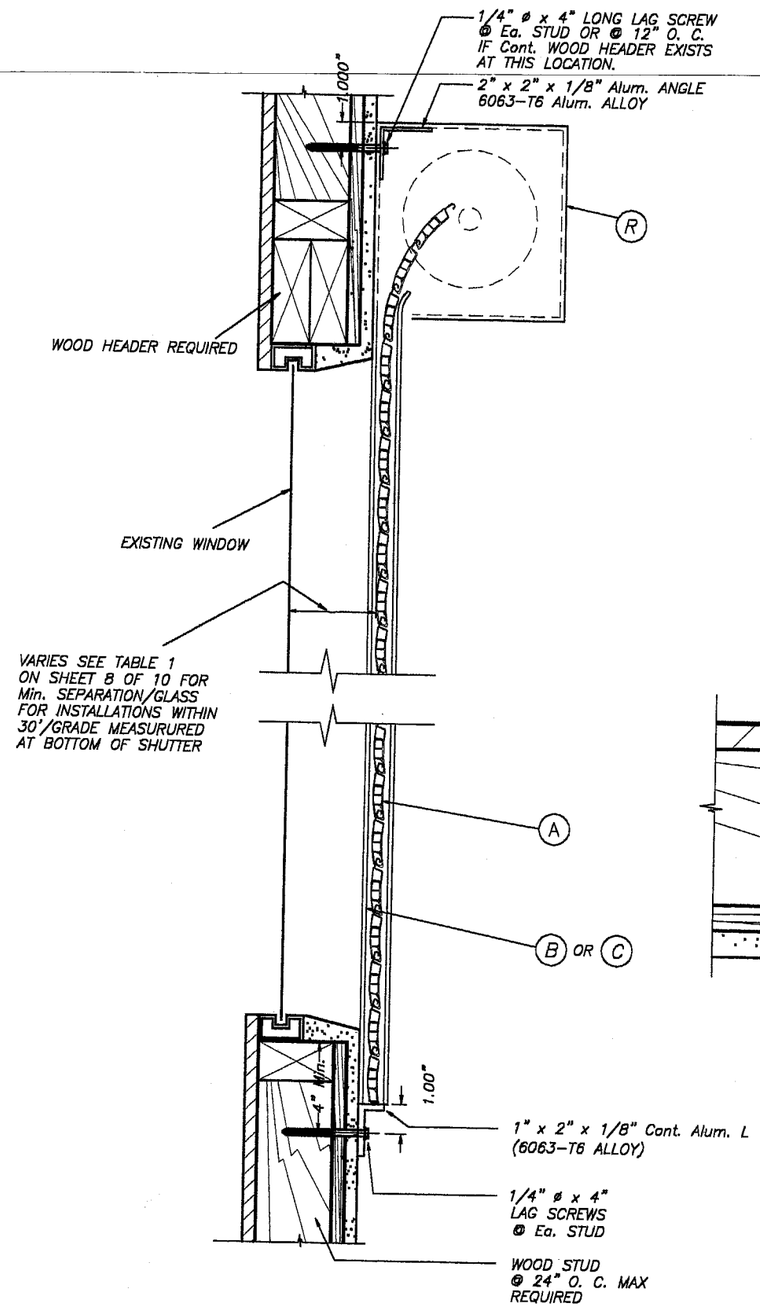

WALL MOUNTING INSTALLATION

SINGLE SPAN CONDITION

N. T. S.

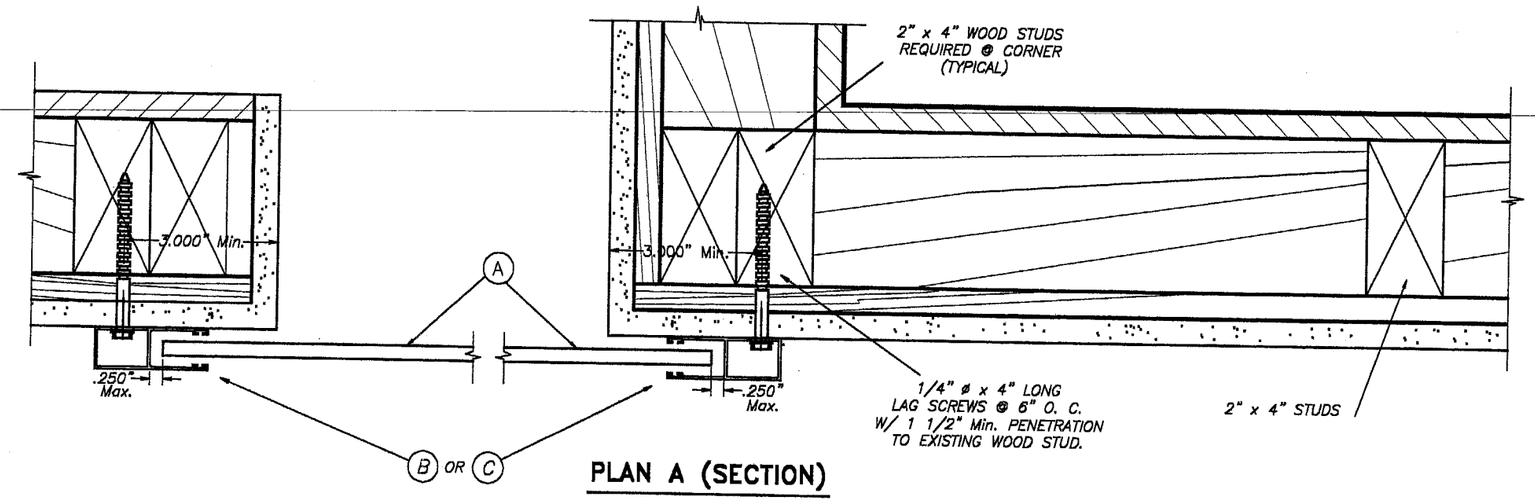

PLAN A (SECTION)

WALL MOUNT

N. T. S.

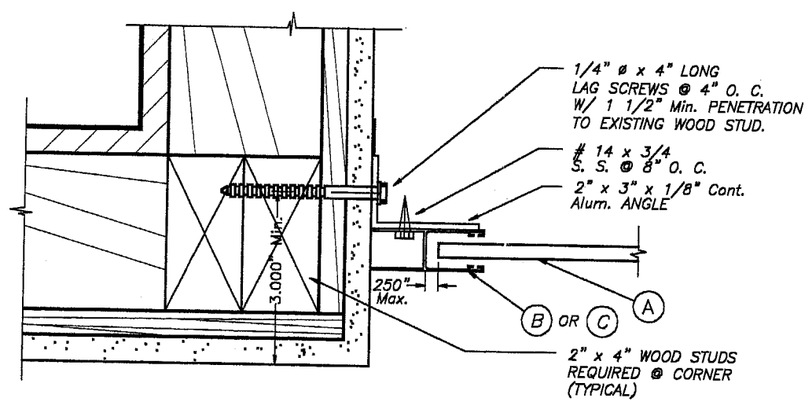

PLAN B (SECTION)

INSIDE MOUNT

N. T. S.

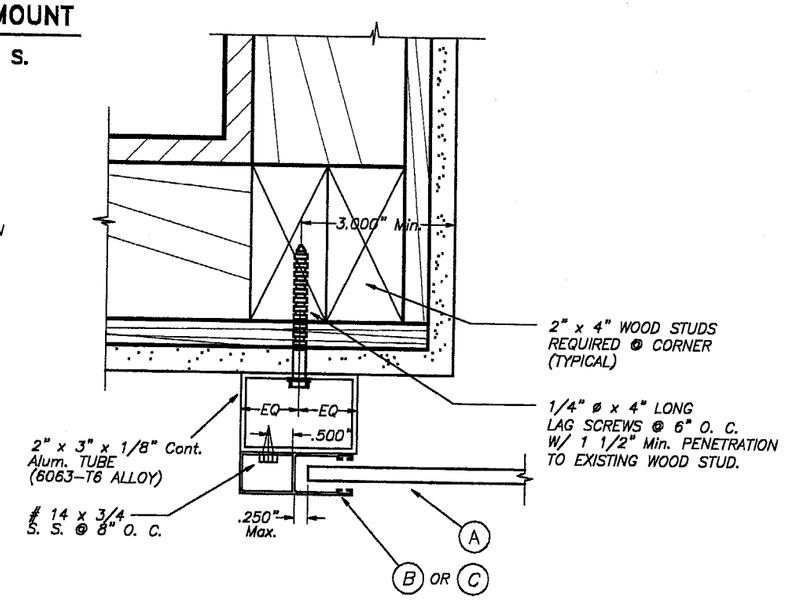

PLAN C

(BUILD-OUT)

N. T. S.

NOTES:

1. INSTALLATIONS ARE ONLY VALID FOR BUILDINGS WITH MEAN ROOF HEIGHT LESS OR EQUAL THAN 30 FEET.
2. FOR NEW FRAME CONSTRUCTION: WOOD MEMBER TO BE SOUTHERN PINE No. 2 W/ SPECIFIC DENSITY OF 0.55 OR EQUAL.
3. MINIMUM PENETRATION OF LAG SCREWS INTO WOOD MEMBER TO BE 1 1/2".

PRODUCT REVISED
as complying with the Florida Building Code
Acceptance No. 03-0106.11
Expiration Date 07/03/08
By
Miami Dade Product Control Division

JUN 0 2 2003

F.B.C. (H.V.H.Z.) / MIAMI-DADE COUNTY

TILTECO INC.
TILLIT TESTING & ENGINEERING COMPANY
6595 N.W. 36th. St., Ste. 217, VIRGINIA GARDENS, Fl. 33166
Phone : (305)871-1530 . Fax : (305)871-1531
EB-0006719
WALTER A. TILLIT Jr. P. E.
FLORIDA Lic. # 44167

ROLL-UP SHUTTER

ALUROLL SHUTTER SYSTEMS, INC.
4747 S.W. 75 AVE.
MIAMI, FLORIDA 33155

REV. No	DESCRIPTION	DATE	REV. No	DESCRIPTION	DATE
1	OLD 96-387	11/08/02	3		
2	–	–	4		

AS SHOWN SCALE
11/08/02 DATE
02-513 DRAWING No
SHEET 7 OF 10

SLAT PERFORMANCE CHART
MAXIMUM DESIGN PRESSURE RATING "W" (p. s. f.) AND CORRESPONDING MAXIMUM SLAT SPAN "L" FOR TYPE 1 SLAT

(USE PRESSURE VALUES AS PER ASCE 7-98)

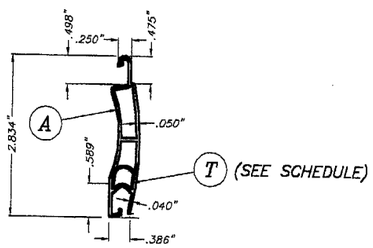

SLAT DETAIL

SCALE: 1/2" = 1"

DESIGN LOAD "W" (p.s.f.)	SLAT TYPE 1			
	MAXIMUM SLAT SPAN *		MINIMUM SEPARATION TO GLASS	
	W/O Ⓣ	W/ Ⓣ	SINGLE & MULTIPLE UNIT **	SINGLE & MULTIPLE UNIT ***
+64.0, −75.0	60"	N/A	3 3/16"	3"
+48.0, −61.0	69"	N/A	3 1/2"	3"
+48.0, −61.0	N/A	70"	3 3/4"	3"
+43.0, −55.0	N/A	72"	3 3/4"	3"

N/A = NOT APPLICABLE.

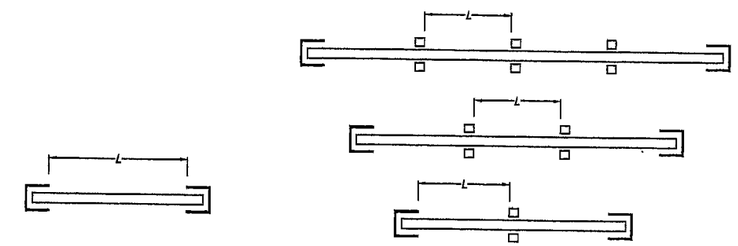

SINGLE SPAN

MULTIPLE SPAN

SPAN LAYOUT

* SPANS VALID FOR APPLICABLE ELEVATIONS OF BUILDING.

** MINIMUM SEPARARTION TO GLASS FOR SHUTTERS INSTALLED WITHIN THE FIRST 30'-0" ELEVATION OF BUILDING AND MAXIMUM SPAN. SEE TABLE 1 FOR Min. SEPARATION TO GLASS FOR SPANS LESS THAN Max. ALLOWED.

*** MINIMUM SEPARATION TO GLASS FOR SHUTTERS INSTALLED ABOVE 30'-0" ELEVATION OF BUILDING, MEASURED AT BOTTOM OF SHUTTER.

NOTE: MINIMUM SEPARATION TO GLASS FOR SINGLE AND MULTIPLE UNITS SHALL BE MEASURED FROM SLAT TO GLASS.

TABLE 1 :

SLAT SPAN (ft)	Min. SEPARATION TO GLASS
> 48" TO 60"	3 3/16"
> 36" TO 48"	2 5/8""
36" OR LESS	1 3/4"

PRODUCT REVISED
as complying with the Florida Building Code
Acceptance No 03-0106.11
Expiration Date 07/03/07
By
Miami Dade Product Control Division

JUN 02 2003

F.B.C. (H.V.H.Z.) / MIAMI-DADE COUNTY

TILTECO INC.
TILLIT TESTING & ENGINEERING COMPANY
6595 N.W. 36th. St., Ste. 217, VIRGINIA GARDENS, Fl. 33166
Phone : (305)871-1530 . Fax : (305)871-1531
EB-0006719
WALTER A. TILLIT Jr. P. E.
FLORIDA Lic. # 44167

ROLL-UP SHUTTER

ALUROLL SHUTTER SYSTEMS, INC.
4747 S.W. 75 AVE.
MIAMI, FLORIDA 33155

REV. No	DESCRIPTION	DATE	REV. No	DESCRIPTION	DATE
1	OLD 96-387	11/08/02	3		
2	–	–	4		

AS SHOWN
SCALE

11/08/02
DATE

02-513
DRAWING No

SHEET 8 OF 10

STORM BAR LOADING CHART

MAXIMUM DESIGN PRESSURE RATING "W" (p. s. f.) AND CORRESPONDING MAXIMUM SPAN "L" FOR A GIVEN TYPE OF STORM BAR AND STORM BAR SPACING. (USE NEGATIVE PRESSURE VALUES AS PER ASCE 7-98)

MAXIMUM DESIGN LOAD "W" (p.s.f.)	TYPE 1 STORM BAR 2" x 2" x .250"				TYPE 2 STORM BAR 2" x 3" x .125"				TYPE 3 STORM BAR 2" x 3" x .125" W/ INSERT				TYPE 4 STORM BAR 2" x 5" x .125" W/ INSERT			
	STORM BAR SPACING *				STORM BAR SPACING *				STORM BAR SPACING *				STORM BAR SPACING *			
	6'-0"	5'-0"	4'-0"	≤ 3'-0"	6'-0"	5'-0"	4'-0"	≤ 3'-0"	6'-0"	5'-0"	4'-0"	≤ 3'-0"	6'-0"	5'-0"	4'-0"	≤ 3'-0"
40.0	6'-5"	6'-8"	7'-0"	7'-7"	7'-3"	7'-6"	8'-0"	8'-7"	8'-8"	9'-0"	9'-0"	9'-0"	10'-0"	10'-0"	10'-0"	10'-0"
42.5	6'-4"	6'-7"	6'-11"	7'-6"	7'-1"	7'-5"	7'-11"	8'-6"	8'-5"	9'-0"	9'-0"	9'-0"	10'-0"	10'-0"	10'-0"	10'-0"
45.0	6'-3"	6'-6"	6'-10"	7'-5"	6'-11"	7'-4"	7'-9"	8'-4"	8'-2"	9'-0"	9'-0"	9'-0"	10'-0"	10'-0"	10'-0"	10'-0"
47.5	6'-2"	6'-5"	6'-9"	7'-4"	6'-9"	7'-3"	7'-8"	8'-3"	8'-0"	8'-9"	9'-0"	9'-0"	10'-0"	10'-0"	10'-0"	10'-0"
50.0	6'-0"	6'-4"	6'-8"	7'-2"	6'-8"	7'-2"	7'-7"	8'-2"	7'-9"	8'-7"	9'-0"	9'-0"	10'-0"	10'-0"	10'-0"	10'-0"
52.5	6'-0"	6'-3"	6'-7"	7'-1"	6'-5"	7'-0"	7'-6"	8'-0"	7'-7"	8'-4"	9'-0"	9'-0"	10'-0"	10'-0"	10'-0"	10'-0"
55.0	5'-11"	6'-2"	6'-6"	7'-0"	6'-3"	6'-11"	7'-5"	7'-11"	7'-5"	8'-1"	9'-0"	9'-0"	10'-0"	10'-0"	10'-0"	10'-0"
57.5	5'-10"	6'-1"	6'-5"	7'-0"	6'-2"	6'-9"	7'-4"	7'-10"	7'-3"	8'-0"	8'-11"	9'-0"	10'-0"	10'-0"	10'-0"	10'-0"
60.0	5'-9"	6'-0"	6'-4"	6'-11"	6'-0"	6'-7"	7'-3"	7'-9"	7'-1"	7'-9"	8'-8"	9'-0"	10'-0"	10'-0"	10'-0"	10'-0"
62.5	5'-8"	6'-0"	6'-4"	6'-10"	5'-11"	6'-6"	7'-2"	7'-7"	7'-0"	7'-8"	8'-6"	9'-0"	10'-0"	10'-0"	10'-0"	10'-0"
65.0	–	5'-11"	6'-3"	6'-9"	–	6'-4"	7'-1"	7'-7"	–	7'-6"	8'-4"	9'-0"	–	10'-0"	10'-0"	10'-0"
67.5	–	5'-11"	6'-2"	6'-8"	–	6'-3"	6'-11"	7'-6"	–	7'-4"	8'-2"	9'-0"	–	10'-0"	10'-0"	10'-0"
70.0	–	5'-10"	6'-1"	6'-7"	–	6'-1"	6'-10"	7'-5"	–	7'-2"	8'-0"	9'-0"	–	10'-0"	10'-0"	10'-0"
72.5	–	5'-9"	6'-0"	6'-7"	–	6'-0"	6'-8"	7'-5"	–	7'-1"	7'-11"	9'-0"	–	10'-0"	10'-0"	10'-0"
75.0	–	5'-8"	6'-0"	6'-6"	–	5'-11"	6'-7"	7'-4"	–	7'-0"	7'-10"	9'-0"	–	10'-0"	10'-0"	10'-0"

* STORM BAR SPACING SHALL BE SUCH THAT MAXIMUM SLAT SPAN SHALL NOT BE EXCEEDED.

HEADER LOADING CHART

MAXIMUM DESIGN PRESSURE RATING "W" (p. s. f.) AND CORRESPONDING MAXIMUM SPAN "L" (Ft.) FOR A GIVEN TYPE OF HEADER AND STORM BAR HEIGHT (Ft.) (USE NEGATIVE PRESSURE VALUES AS PER ASCE 7-98)

MAXIMUM DESIGN LOAD "W" (p.s.f)	TYPE 1 HEADER 2" x 3" x .125"		TYPE 2 HEADER 2" x 3" x .125" W/ INSERT		TYPE 3 HEADER 2" x 5" x .125"			TYPE 4 HEADER 2" x 5" x .125" W/ INSERT		
	STORM BAR HEIGHT		STORM BAR HEIGHT		STORM BAR HEIGHT			STORM BAR HEIGHT		
	≤ 5'-0"	> 5' TO 8'	≤ 5'-0"	> 5' TO 8'	≤ 5'-0"	> 5' TO 8'	> 8' TO 10	≤ 5'-0"	> 5' TO 8'	> 8' TO 10
40.0	11'-4	9'-0"	13'-6"	10'-8"	15'-6"	13'-2"	11'-9"	20'-1"	16'-0"	14'-4"
42.5	11'-0"	8'-9"	13'-0"	10'-4"	15'-3"	12'-9"	11'-5"	19'-8"	15'-6"	13'-10"
45.0	10'-9"	8'-6"	12'-8"	10'-0"	15'-1"	12'-5"	11'-1"	19'-1"	15'-1"	13'-6"
47.5	10'-6"	8'-4"	12'-4"	9'-9"	14'-10"	12'-1"	10'-9"	18'-7"	14'-8"	13'-1"
50.0	10'-3"	8'-0"	12'-0"	9'-6"	14'-8"	11'-9"	10'-6"	18'-1"	14'-4"	12'-10"
52.5	10'-0"	7'-10"	11'-9"	9'-4"	14'-6"	11'-6"	10'-3"	17'-8"	14'-0"	12'-6"
55.0	9'-9"	7'-8"	11'-6"	9'-0"	14'-2"	11'-3"	10'-0"	17'-3"	13'-8"	12'-2"
57.5	9'-6"	7'-6"	11'-3"	8'-10"	13'-10"	11'-0"	9'-10"	16'-10"	13'-4"	11'-11"
60.0	9'-4"	7'-4"	11'-0"	8'-8"	13'-7"	10'-9"	9'-7"	16'-6"	13'-1"	11'-8"
62.5	9'-2"	7'-3"	10'-9"	8'-6"	13'-4"	10'-6"	9'-5"	16'-2"	12'-10"	11'-5"
65.0	9'-0"	7'-1"	10'-6"	8'-4"	13'-0"	10'-4"	9'-3"	15'-10"	12'-7"	11'-3"
67.5	8'-10"	6'-11"	10'-4"	8'-2"	12'-10"	10'-1"	9'-1"	15'-7"	12'-4"	11'-0"
70.0	8'-7"	6'-10"	10'-2"	8'-0"	12'-7"	9'-11"	8'-11"	15'-4"	12'-1"	10'-10"
72.5	8'-6"	6'-8"	10'-0"	7'-11"	12'-4"	9'-9"	8'-9"	15'-0"	11'-11"	10'-7"
75.0	8'-4"	6'-7"	9'-10"	7'-10"	12'-2"	9'-7"	8'-7"	14'-9"	11'-8"	10'-6"

PRODUCT REVISED
as complying with the Florida
Building Code
Acceptance No 03-0106.11
Expiration Date 07/03/08
By
Miami Dade Product Control
Division

F.B.C. (H.V.H.Z.) / MIAMI-DADE COUNTY

JUN 02 2003

TILTECO INC.
TILLIT TESTING & ENGINEERING COMPANY
6595 N.W. 36th. St., Ste. 217, VIRGINIA GARDENS, FL. 33166
Phone : (305)871-1530 . Fax : (305)871-1531
EB-0006719
WALTER A. TILLIT Jr. P. E.
FLORIDA Lic. # 44167

ROLL-UP SHUTTER

ALUROLL SHUTTER SYSTEMS, INC.
4747 S.W. 75 AVE.
MIAMI, FLORIDA 33155

REV. No	DESCRIPTION	DATE	REV. No	DESCRIPTION	DATE
1	OLD 96-387	11/08/02	3		
2	–	–	4		

AS SHOWN SCALE

11/08/02 DATE

02-513 DRAWING No

SHEET 9 OF 10

MULLION LOADING CHART

MAXIMUM DESIGN PRESSURE RATING "W" (p. s. f.) AND CORRESPONDING MAXIMUM SPAN "L" (Ft.) FOR A GIVEN TYPE OF MULLION AND MULLION SPACING.

(USE NEGATIVE PRESSURE VALUES AS PER ASCE 7-98)

MAXIMUM DESIGN LOAD "W" (p.s.f.)	TYPE 1 MULLION 2" x 3" x .125"			TYPE 2 MULLION 2" x 3" x .125" W/ INSERT				TYPE 3 MULLION 2" x 5" x .125"				TYPE 4 MULLION 2" x 5" x .125" W/ INSERT			
	MULLION SPACING			MULLION SPACING				MULLION SPACING				MULLION SPACING			
	3' OR LESS	> 3' TO 4'	> 4' TO 5'	3' OR LESS	> 3' TO 4'	> 4' TO 5'	> 5' TO 8'	3' OR LESS	> 3' TO 4'	> 4' TO 5'	> 5' TO 8'	3' OR LESS	> 3' TO 4'	> 4' TO 5'	> 5' TO 8'
40.0	7'-3"	6'-7"	6'-1"	9'-7"	8'-8"	8'-0"	7'-10"	10'-11"	9'-11"	10'-7"	9'-0"	15'-4"	13'-11"	12'-11"	12'-8"
42.5	7'-1"	6'-5"	6'-0"	9'-4"	8'-6"	7'-10"	7'-9"	10'-8"	9'-8"	10'-4"	8'-10"	15'-0"	13'-8"	12'-8"	12'-5"
45.0	7'-0"	6'-4"	5'-11"	9'-2"	8'-4"	7'-9"	7'-7"	10'-6"	9'-6"	10'-2"	8'-8"	14'-9"	13'-4"	12'-5"	12'-2"
47.5	6'-10"	6'-3"	5'-9"	9'-0"	8'-2"	7'-7"	7'-6"	10'-3"	9'-4"	10'-0"	8'-6"	14'-6"	13'-2"	12'-2"	12'-0"
50.0	6'-9"	6'-1"	5'-8"	8'-10"	8'-0"	7'-6"	7'-4"	10'-1"	9'-2"	9'-9"	8'-4"	14'-2"	12'-11"	12'-0"	11'-10"
52.5	6'-7"	6'-0"	5'-7"	8'-9"	7'-11"	7'-4"	7'-2"	9'-11"	9'-0"	9'-8"	8'-3"	14'-0"	12'-9"	11'-10"	11'-7"
55.0	6'-6"	5'-11"	5'-6"	8'-7"	7'-10"	7'-3"	7'-1"	9'-10"	8'-11"	9'-6"	8'-1"	13'-9"	12'-6"	11'-8"	11'-5"
57.5	6'-5"	5'-10"	5'-5"	8'-5"	7'-8"	7'-1"	7'-0"	9'-8"	8'-9"	9'-4"	8'-0"	13'-7"	12'-4"	11'-5"	11'-3"
60.0	6'-4"	5'-9"	5'-4"	8'-4"	7'-7"	7'-0"	6'-10"	9'-6"	8'-8"	9'-3"	7'-11"	13'-4"	12'-2"	11'-4"	11'-1"
62.5	6'-3"	5'-8"	5'-3"	8'-2"	7'-6"	6'-11"	6'-10"	9'-5"	8'-6"	9'-1"	7'-9"	13'-2"	12'-0"	11'-1"	10'-11"
65.0	6'-2"	5'-7"	5'-3"	8'-1"	7'-4"	6'-10"	6'-8"	9'-3"	8'-5"	9'-0"	7'-8"	13'-0"	11'-10"	11'-0"	10'-8"
67.5	6'-1"	5'-7"	5'-2"	8'-0"	7'-3"	6'-9"	6'-7"	9'-2"	8'-4"	8'-10"	7'-7"	12'-10"	11'-8"	10'-10"	10'-8"
70.0	6'-0"	5'-6"	5'-1"	7'-11"	7'-2"	6'-8"	6'-6"	9'-0"	8'-3"	8'-9"	7'-6"	12'-8"	11'-6"	10'-9"	10'-6"
72.5	5'-11"	5'-5"	5'-0"	7'-10"	7'-1"	6'-7"	6'-6"	8'-11"	8'-1"	8'-8"	7'-5"	12'-6"	11'-5"	10'-7"	10'-4"
75.0	5'-11"	5'-4"	5'-0"	7'-9"	7'-0"	6'-6"	6'-5"	8'-10"	8'-0"	8'-7"	7'-4"	12'-5"	11'-3"	10'-6"	10'-2"

MAXIMUM ANCHOR SPACING (in.) AT SIDE RAILS VERSUS EDGE DISTANCE = E. D.

MAXIMUM SIDE RAILS SPACINGS SHOWN ON SHEET 4 OF 10 ARE VALID FOR 3 1/2" EDGE DISTANCE. FOR E. D. LESS THAN 3 1/2", REDUCE ANCHOR SPACING BY MULTIPLYING SPACINGS SHOWN ON THAT SHEET BY THE FOLLOWING FACTORS.

ACTUAL E. D.= EDGE DISTANCE	FACTOR
3 1/2"	1.0
3"	.86
2 1/2"	.71
2"	.50

PRODUCT REVISED
as complying with the Florida Building Code
Acceptance No 03-0106.11
Expiration Date 07/03/08
By
Miami Dade Product Control Division

F.B.C. (H.V.H.Z.) / MIAMI-DADE COUNTY

JUN 02 2003

TILTECO INC.
TILLIT TESTING & ENGINEERING COMPANY
6595 N.W. 36th. St., Ste. 217, VIRGINIA GARDENS, FL 33166
Phone : (305)871-1530 . Fax : (305)871-1531
EB-0006719
WALTER A. TILLIT Jr. P. E.
FLORIDA Lic. # 44167

ROLL-UP SHUTTER

ALUROLL SHUTTER SYSTEMS, INC.
4747 S.W. 75 AVE.
MIAMI, FLORIDA 33155

REV. No	DESCRIPTION	DATE	REV. No	DESCRIPTION	DATE
1	OLD 98-387	11/08/02	3		
2	–	–	4		

AS SHOWN SCALE

11/08/02 DATE

02-513 DRAWING No

SHEET 10 OF 10