MIAMI-DADE

BUILDING CODE COMPLIANCE OFFICE (BCCO)
PRODUCT CONTROL DIVISION

MIAMI-DADE COUNTY, FLORIDA
METRO-DADE FLAGLER BUILDING
140 WEST FLAGLER STREET, SUITE 1603
MIAMI, FLORIDA 33130-1563
(305) 375-2901 FAX (305) 375-2908

NOTICE OF ACCEPTANCE (NOA)

United Enertech, Inc.
3101 South Orchard Knob Ave.
Chattanooga, TN 37407

SCOPE: This NOA is being issued under the applicable rules and regulations governing the use of construction materials. The documentation submitted has been reviewed by Miami-Dade County Product Control Division and accepted by the Board of Rules and Appeals (BORA) to be used in Miami Dade County and other areas where allowed by the Authority Having Jurisdiction (AHJ).

This NOA shall not be valid after the expiration date stated below. The Miami Dade County Product Control Division (in Miami-Dade County) and/or the AHJ (in areas other than Miami Dade County) reserve the right to have this product or material tested for quality assurance purposes. If this product or material fails to perform in the accepted manner, the manufacturer will incur the expense of such testing and the AHJ may immediately revoke, modify, or suspend the use of such product or material within their jurisdiction. BORA reserves the right to revoke this acceptance, if it is determined by Miami-Dade county Product Control Division that this product or material fails to meet the requirements of the applicable building code.

This product is approved as described herein, and has been designed to comply with the High Velocity Hurricane Zone of the Florida Building Code.

DESCRIPTION: Aluminum Louver System Model FL-D-6.

APPROVAL DOCUMENT: Drawing No.**02-523**, titled "Aluminum Louver System Model FL-D-6" dated 11/07/02 with last revision on 11/07/02, prepared by Tilteco, Inc., signed and sealed by Walter A. Tillit, P.E., bearing the Miami-Dade County Product Control Revised stamp with the NOA number and expiration date by the Miami-Dade County Product Control Division.

MISSILE IMPACT RATING: Large and Small Missile Impact Resistant.

LABELING: Each unit shall bear a permanent label with the manufacturer's name or logo, city, state and following statement: "Miami-Dade County Product Control Approved", unless otherwise noted herein.

RENEWAL of this NOA shall be considered after a renewal application has been filed and there has been no change in the applicable building code negatively affecting the performance of this product.

TERMINATION of this NOA will occur after the expiration date or if there has been a revision or change in the materials, use, and/or manufacture of the product or process. Misuse of this NOA as an endorsement of any product, for sales, advertising or any other purposes shall automatically terminate this NOA. Failure to comply with any section of this NOA shall be cause for termination and removal of NOA.

ADVERTISEMENT: The NOA number preceded by the words Miami-Dade County, Florida, and followed by the expiration date may be displayed in advertising literature. If any portion of the NOA is displayed, then it shall be done in its entirety.

INSPECTION: A copy of this entire NOA shall be provided to the user by the manufacturer or its distributors and shall be available for inspection at the job site at the request of the Building Official.

This NOA revises NOA # 01-0904.03consists of this page 1 as well as approval document mentioned above.

The submitted documentation was reviewed by **Candido F. Font PE.**

4/11/3

PRODUCT CONTROL ACCEPTED

NOA No: 03-0106.20
Expiration Date: January 17, 2006
Approval Date: May 1, 2003

NOTICE OF ACCEPTANCE: EVIDENCE SUBMITTED

A. DRAWINGS.

1. Drawing prepared by Tilteco, Inc., titled "Aluminum Louver System Model FL-D-6," Drawing No. 01-131, dated 05/22/01, revised on 12/04/01, signed and sealed by W. A. Tillit Jr. PE.

B. TESTS.

1. Test report on Large Missile Impact Test per PA 201, Cyclic Wind Pressure Test per PA 203 and Uniform Static Air Pressure Test per PA 202 of "Aluminum Louver Panel System model FL-D-4", prepared by American Test Lab of South Florida, report #0604.01-01, dated 06/21/01, signed and sealed by W. R. Mehner PE & H. Hattem PE.
2. Test Report on Large Missile Impact Test per PA 201, Cyclic Wind Pressure Test per PA 203 of "Aluminum Louver Panel System FL-D-4", prepared by American Test Lab of South Florida, report # 1212.01-01, dated 12/13/01, signed and sealed by W. R. Mehner, PE.

C. CALCULATIONS.

1. Approval Aluminum Louver System Model FL-D-6 prepared by Tilteco, Inc. sheets 1 through 9 of 9, signed and sealed by W. A. Tillit, PE. on 06/29/01.

D. MATERIAL CERTIFICATIONS.

1. Test report on Tensile Test per ASTM E8 of 3 samples ATL 0604.01-01B, C, & D1, No. 1GM-1037, signed and sealed by F. Grate, PE.

E. STATEMENTS

1. No financial interest letter issued by Tilteco, Inc., dated 08/28/01, signed and sealed by W. A. Tillit Jr. PE.
2. Code compliance letter issued by Tilteco, Inc. on 08/28/01, signed and sealed by W. A. Tillit, PE.
3. Test compliance letter issued by American Test Lab of South Florida on 06/21/01, signed and sealed by W. H. Mehner, PE. & H. Hattem PE.
4. Changes to drawing only letter issued by Tilteco, Inc. on 12/04/02, signed and sealed by W. A. Tillit P.E.

Candido F. Font PE.
Sr. Product Control Examiner
NOA No 03-0106.20
Expiration Date: January 17, 2006
Approval: Date: May 1, 2003

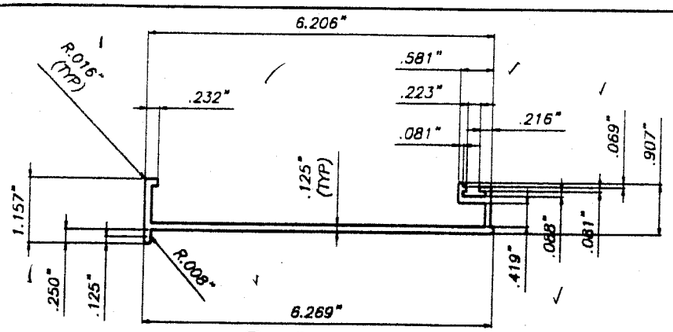

① 6" TOP BLADE
SCALE: 3/8"=1"

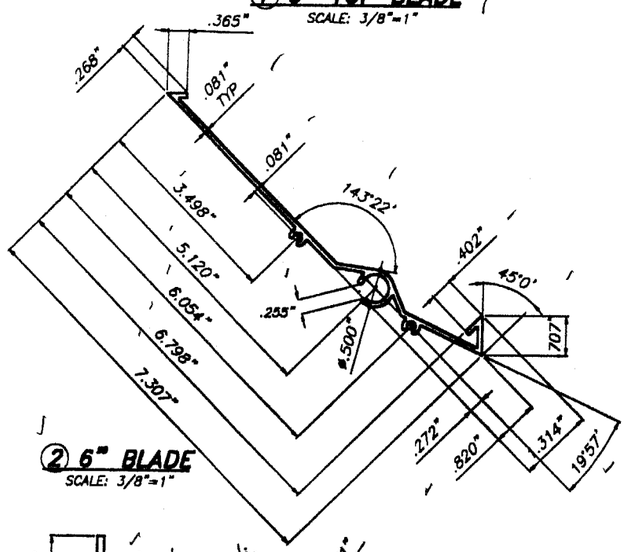

② 6" BLADE
SCALE: 3/8"=1"

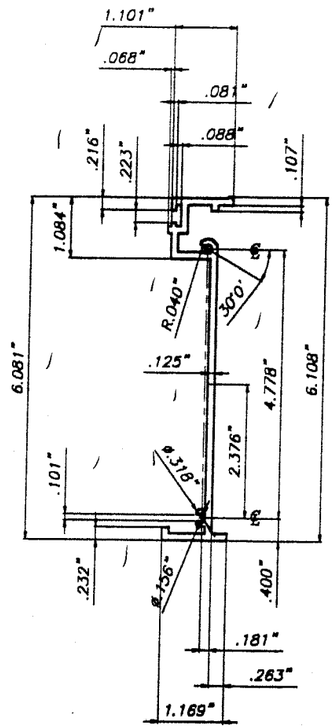

⑤ 6" SIDE JAMB
SCALE: 3/8"=1"

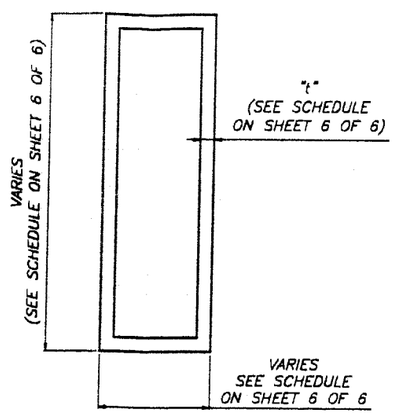

⑦ MULLION
6063-T6 ALLOY
SCALE: 3/8"=1"

GENERAL NOTES:

1. ALUMINUM LOUVER SYSTEM SHOWN ON THIS PRODUCT APPROVAL DOCUMENT (P.A.D.) HAS BEEN DESIGNED IN ACCORDANCE WITH THE 2001 EDITION OF THE FLORIDA BUILDING CODE.
DESIGN WIND LOADS SHALL BE DETERMINED AS PER SECTION 1619 OF THE ABOVE MENTIONED CODE, FOR A BASIC WIND SPEED OF 146 m.p.h., AND IN ACCORDANCE W/ ASCE 7-98 STANDARD.
ALUMINUM LOUVER SYSTEM'S ADEQUACY FOR IMPACT AND FATIGUE RESISTANCE HAS BEEN VERIFIED IN ACCORDANCE WITH SECTION 1606.1.4 OF THE ABOVE MENTIONED CODE AS PER AMERICAN TESTING LAB REPORT # 0604.01-01 AS PER PA-201, PA-202 & PA-203 STANDARD..

2. ALL ALUMINUM EXTRUSIONS SHALL BE 6063-T6 ALLOY (UNLESS OTHERWISE NOTED).

3. ALL SCREWS TO BE STAINLESS STEEL 304 OR 316 SERIES W/ 50 ksi YIELD POINT AND 90 ksi TENSILE STRENGTH OR CORROSION RESISTANT COATED CARBON STEEL AS PER DIN 50018.
THRU BOLTS AT MULLION TO BE ASTM A-307 GALVANIZED STEEL OR AISI 304 SERIES STAINLESS STEEL.

4. ALL ALUMINUM COMPONENTS FRAMING SHALL BE WELDED IN ACCORDANCE WITH THE AMERICAN WELDING SOCIETY LATEST EDITION REGULATIONS USE CERTIFIED WELDERS. USE ER-5356 ELECTRODES.

5. ANCHORS TO CONCRETE/ MASONRY SHALL BE AS FOLLOWS:

NAME	DIAMETER	MIN. PENETRATION	MIN. EDGE DISTANCE (ED)	MANUFACTURER
TAPCONS	1/4"	1 3/4"	3"	ITW/BUILDEX OR ELCO TEXTRON
POWER BOLTS	SEE SPECIFICATIONS ON SHEET 6 OF 6			POWER FASTENING, INC.

(A) ANCHORS SHALL BE INSTALLED FOLLOWING ALL OF THE RECOMMENDATIONS AND SPECIFICATIONS OF THE ANCHOR'S MANUFACTURER.

6. THIS LOUVER SHALL BE ONLY INSTALLED IN A LOCATION WHERE THE ROOM BEHIND THE LOUVER IS DESIGNED TO DRAIN WATER PENETRATING INTO THE ROOM, AND THE ROOM WILL HOUSE WATER RESISTENT/WATER PROOF EQUIPMENT, COMPONENTS OR SUPPLIES.

7. IT SHALL BE RESPONSIBILITY OF THE CONTRACTOR TO VERIFY THE SOUNDNESS OF THE STRUCTURE WHERE LOUVER SYSTEM IS TO BE ATTACHED TO INSURE PROPER ANCHORAGE.

8. (A) THIS PRODUCT APPROVAL DOCUMENT (P.A.D.) PREPARED BY THIS ENGINEER IS GENERIC AND DOES NOT PROVIDE INFORMATION FOR A SITE SPECIFIC PROJECT; i.e. WHERE THE SITE CONDITIONS DEVIATE FROM THE P.A.D.

(B) CONTRACTOR TO BE RESPONSIBLE FOR THE SELECTION, PURCHASE AND INSTALLATION OF THIS PRODUCT BASED ON THIS PRODUCT APPROVAL PROVIDED HE/SHE DOES NOT DEVIATE FROM THE CONDITIONS DETAILED ON THIS DOCUMENT.

(C) THIS PRODUCT APPROVAL DOCUMENT WILL BE CONSIDERED INVALID IF MODIFIED.

(D) SITE SPECIFIC PROJECTS SHALL BE PREPARED BY A FLORIDA REGISTERED ENGINEER OR ARCHITECT WHICH WILL BECOME THE PROFESSIONAL OF RECORD (P.O.R) FOR THE PROJECT AND WHO WILL BE RESPONSIBLE FOR THE PROPER USE OF THE P.A.D.

(E) THIS P.A.D. SHALL COMPLY WITH SECTION 2: 61G15 OF THE FLORIDA ADMINISTRATIVE CODE.

9. LOUVER'S MANUFACTURER STAMP SHALL BE PLACED ON THE EXPOSED SURFACE OF LOUVER BLADE (COMPONENT 2).
ONE LABEL SHALL BE PLACED FOR EVERY OPENING. LABEL SHALL READ AS FOLLOWS:
UNITED ENERTECH, INC.
CHATTANOOGA, TN.
MIAMI-DADE COUNTY PRODUCT CONTROL APPROVED.

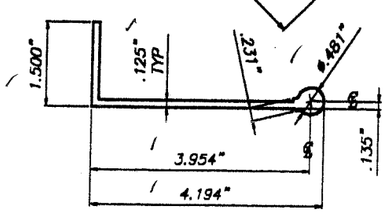

③ 6" BLADE SUPPORT
SCALE: 3/8"=1"

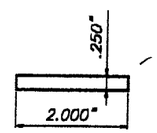

⑥ LOUVER IMPACT STRAP
SCALE: 3/8"=1"

COMPONENTS
SCALE: 3/8"=1"

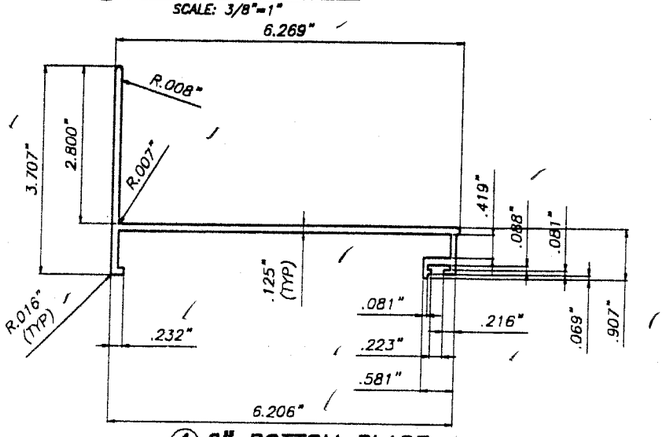

④ 6" BOTTOM BLADE
SCALE: 3/8"=1"

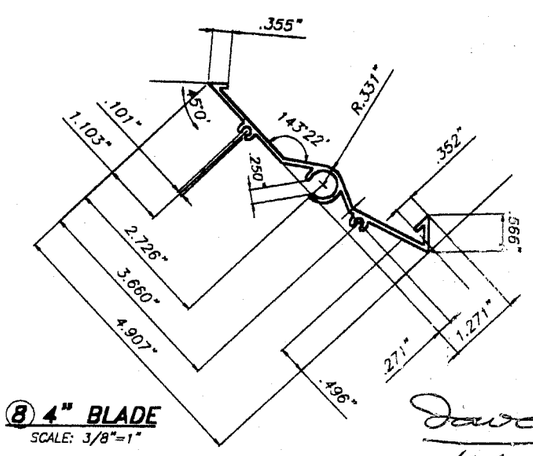

⑧ 4" BLADE
SCALE: 3/8"=1"

PRODUCT REVISED
as complying with the Florida Building Code
Acceptance No. 03-0106.20
Expiration Date 01/17/08
By
Miami Dade Product Control Division

MAXIMUM DESIGN PRESSURE RATING
+150.0, -150.0 psf.
LARGE MISSILE IMPACT RESISTANCE.

F.B.C.(H.V.H.Z.) / MIAMI-DADE COUNTY

TILTECO INC.
TILLIT TESTING & ENGINEERING COMPANY
6595 N.W. 36th. St., Ste. 217, VIRGINIA GARDENS, Fl. 33166
Phone : (305)871-1530 . Fax : (305)871-1531
EB-0006719
WALTER A. TILLIT Jr. P. E.
FLORIDA Lic. # 44167

ALUMINUM LOUVER SYSTEM
MODEL FL-D-6

AS SHOWN SCALE

UNITED ENERTECH, INC.
3101 SOUTH ORCHARD KNOB AVE.
CHATTANOOGA, TN, 37407

11/07/02 DATE

02-523 DRAWING No

REV. No	DESCRIPTION	DATE	REV. No	DESCRIPTION	DATE
1	OLD 01-131	11/07/02	3	–	–
2	–	–	4	–	–

SHEET 1 OF 6

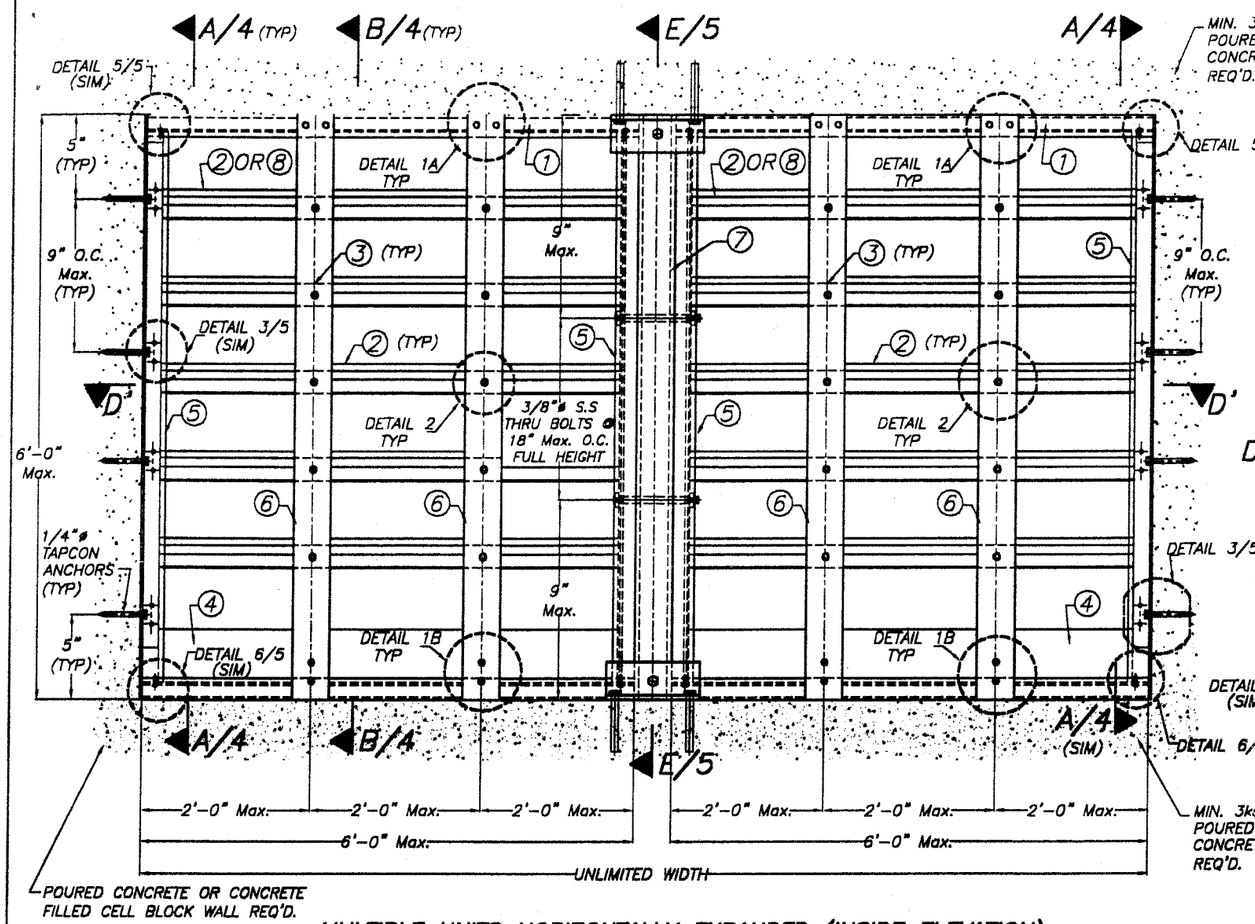

MULTIPLE UNITS HORIZONTALLY EXPANDED (INSIDE ELEVATION)

SCALE: 1/8"=1"

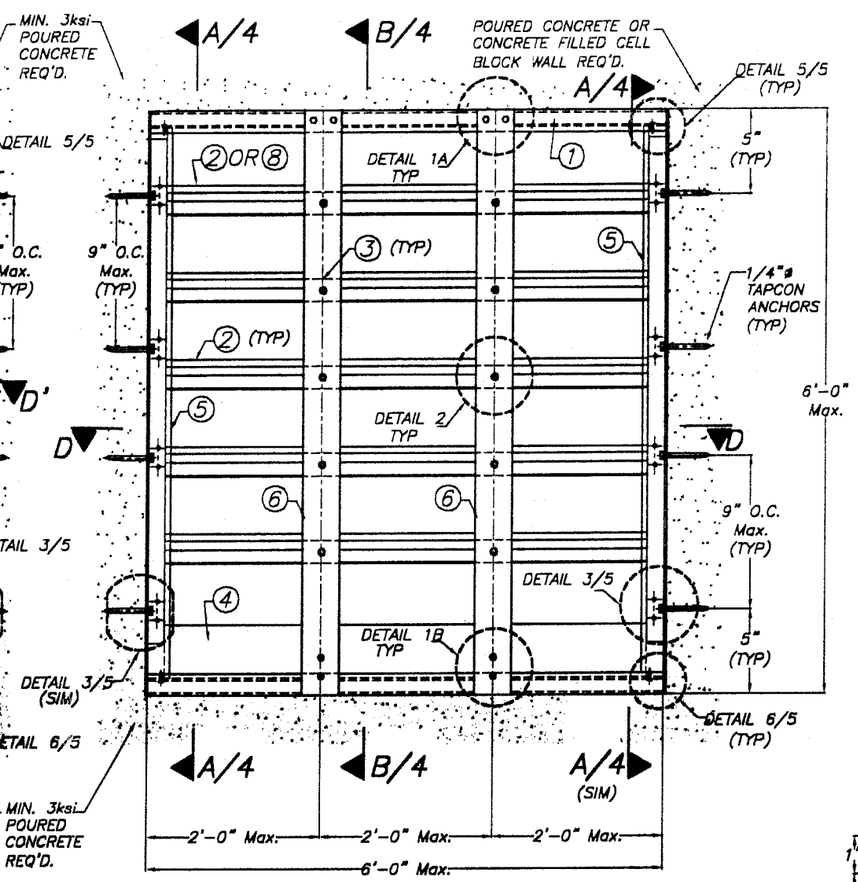

SINGLE UNIT (INSIDE ELEVATION)

SCALE: 1/8"=1"

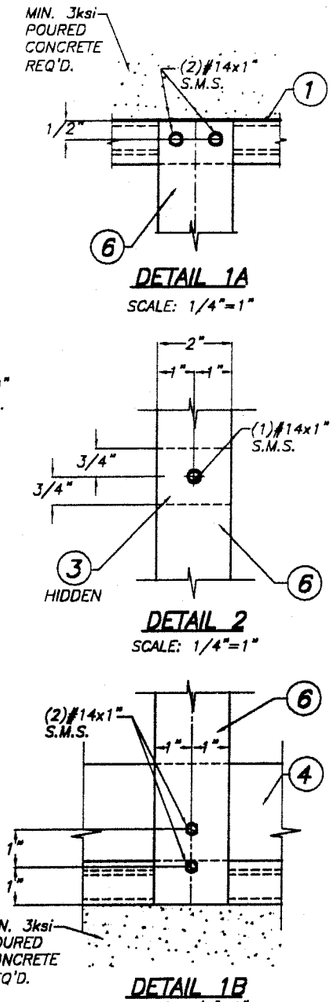

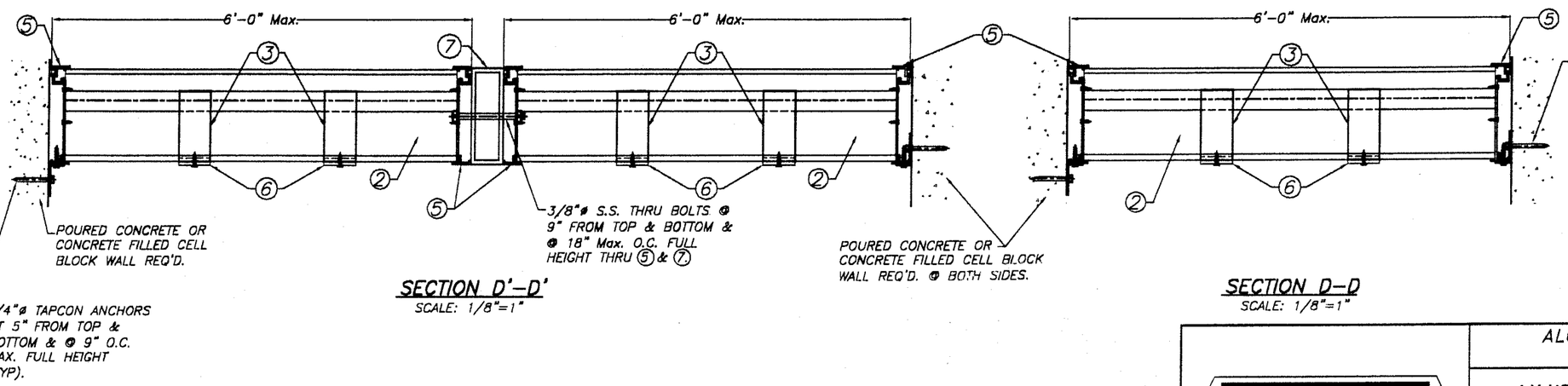

SECTION D'-D'

SCALE: 1/8"=1"

SECTION D-D

SCALE: 1/8"=1"

1/4"ø TAPCON ANCHORS AT 5" FROM TOP & BOTTOM & @ 9" O.C. MAX. FULL HEIGHT (TYP).

PRODUCT REVISED
as complying with the Florida Building Code
Acceptance No. 03-0106.20
Expiration Date 01/17/08
By
Miami Dade Product Control Division

F.B.C.(H.V.H.Z.) / MIAMI-DADE COUNTY

7/1/02

TILTECO INC.
TILLIT TESTING & ENGINEERING COMPANY
6595 N.W. 36th. St., Ste. 217, VIRGINIA GARDENS, Fl. 33166
Phone : (305)871-1530 . Fax : (305)871-1531
EB-0006719
WALTER A. TILLIT Jr. P. E.
FLORIDA Lic. # 44167

ALUMINUM LOUVER SYSTEM
MODEL FL-D-6

UNITED ENERTECH, INC.
3101 SOUTH ORCHARD KNOB AVE.
CHATTANOOGA, TN, 37407

REV. No	DESCRIPTION	DATE	REV. No	DESCRIPTION	DATE
1	OLD 01-131	11/07/02	3	–	–
2	–	–	4	–	–

AS SHOWN
SCALE

11/07/02
DATE

02-523
DRAWING No

SHEET 2 OF 6

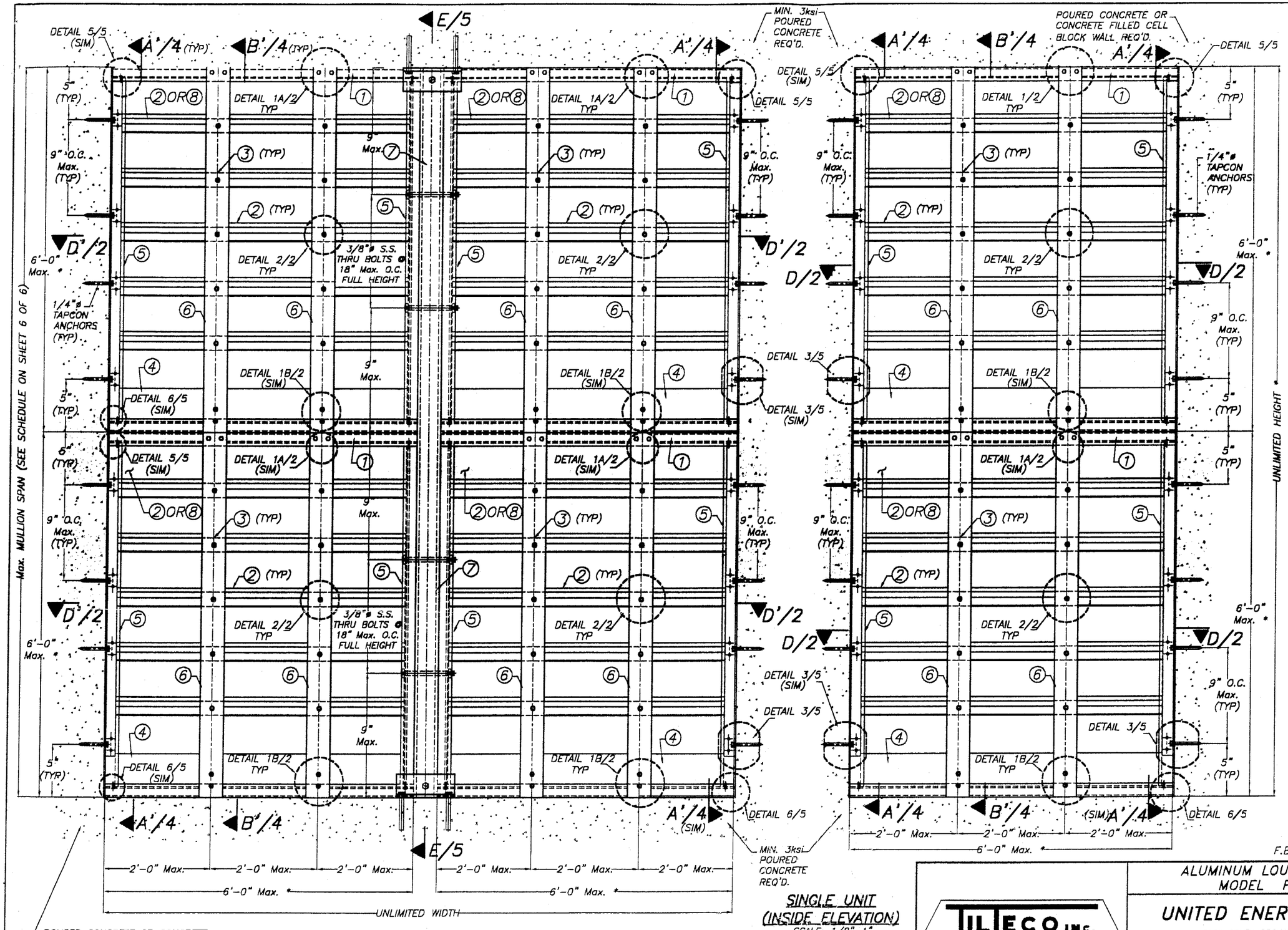

MULTIPLE UNITS HORIZONTALLY & VERTICALLY EXPANDED (INSIDE ELEVATION)

SCALE: 1/8"=1"

SINGLE UNIT (INSIDE ELEVATION)

SCALE: 1/8"=1"

* NUMBER OF LOUVER PANEL UNITS NEEDED TO ACHIEVE THE OPENING HEIGHT AND WIDTH MAY VARY HOWEVER MAXIMUM UNIT HEIGHT AND WIDTH SHALL NO EXCEED 6'-0".

PRODUCT REVISED
as complying with the Florida Building Code
Acceptance No. 03-0106.2
Expiration Date 01/17/06
By
Miami Dade Product Control Division

F.B.C.(H.V.H.Z.) / MIAMI-DADE COUNTY

TILTECO INC.
TILLIT TESTING & ENGINEERING COMPANY
6595 N.W. 36th. St., Ste. 217, VIRGINIA GARDENS, FL 33166
Phone : (305)871-1530 . Fax : (305)871-1531
EB-0006719
WALTER A. TILLIT Jr. P. E.
FLORIDA Lic. # 44167

ALUMINUM LOUVER SYSTEM
MODEL FL-D-6

UNITED ENERTECH, INC.
3101 SOUTH ORCHARD KNOB AVE.
CHATTANOOGA, TN, 37407

REV. No	DESCRIPTION	DATE	REV. No	DESCRIPTION	DATE
1	OLD 01-131	11/07/02	3	–	–
2	–	–	4	–	–

AS SHOWN SCALE

11/07/02 DATE

02-523 DRAWING No

SHEET 3 OF 6

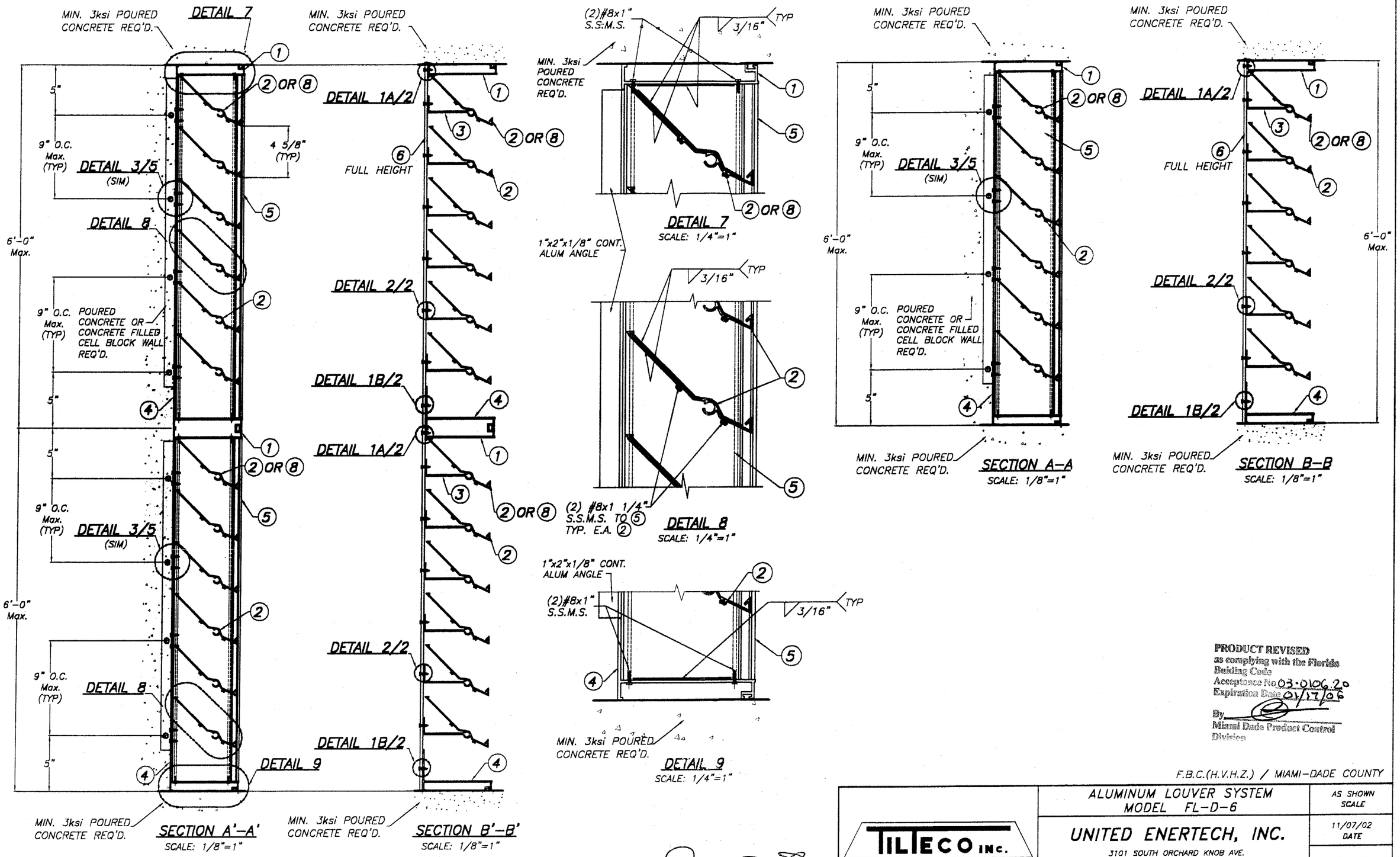

PRODUCT REVISED
as complying with the Florida Building Code
Acceptance No 03-0106.20
Expiration Date 01/17/06
By
Miami Dade Product Control Division

F.B.C.(H.V.H.Z.) / MIAMI-DADE COUNTY

TILTECO INC.
TILLIT TESTING & ENGINEERING COMPANY
6595 N.W. 36th. St., Ste. 217, VIRGINIA GARDENS, FL 33166
Phone : (305)871-1530 . Fax : (305)871-1531
EB-0006719
WALTER A. TILLIT Jr. P. E.
FLORIDA Lic. # 44167

ALUMINUM LOUVER SYSTEM
MODEL FL-D-6

UNITED ENERTECH, INC.
3101 SOUTH ORCHARD KNOB AVE.
CHATTANOOGA, TN, 37407

REV. No	DESCRIPTION	DATE	REV. No	DESCRIPTION	DATE
1	OLD 01-131	11/07/02	3	–	–
2	–	–	4	–	–

AS SHOWN
SCALE

11/07/02
DATE

02-523
DRAWING No

SHEET 4 OF 6

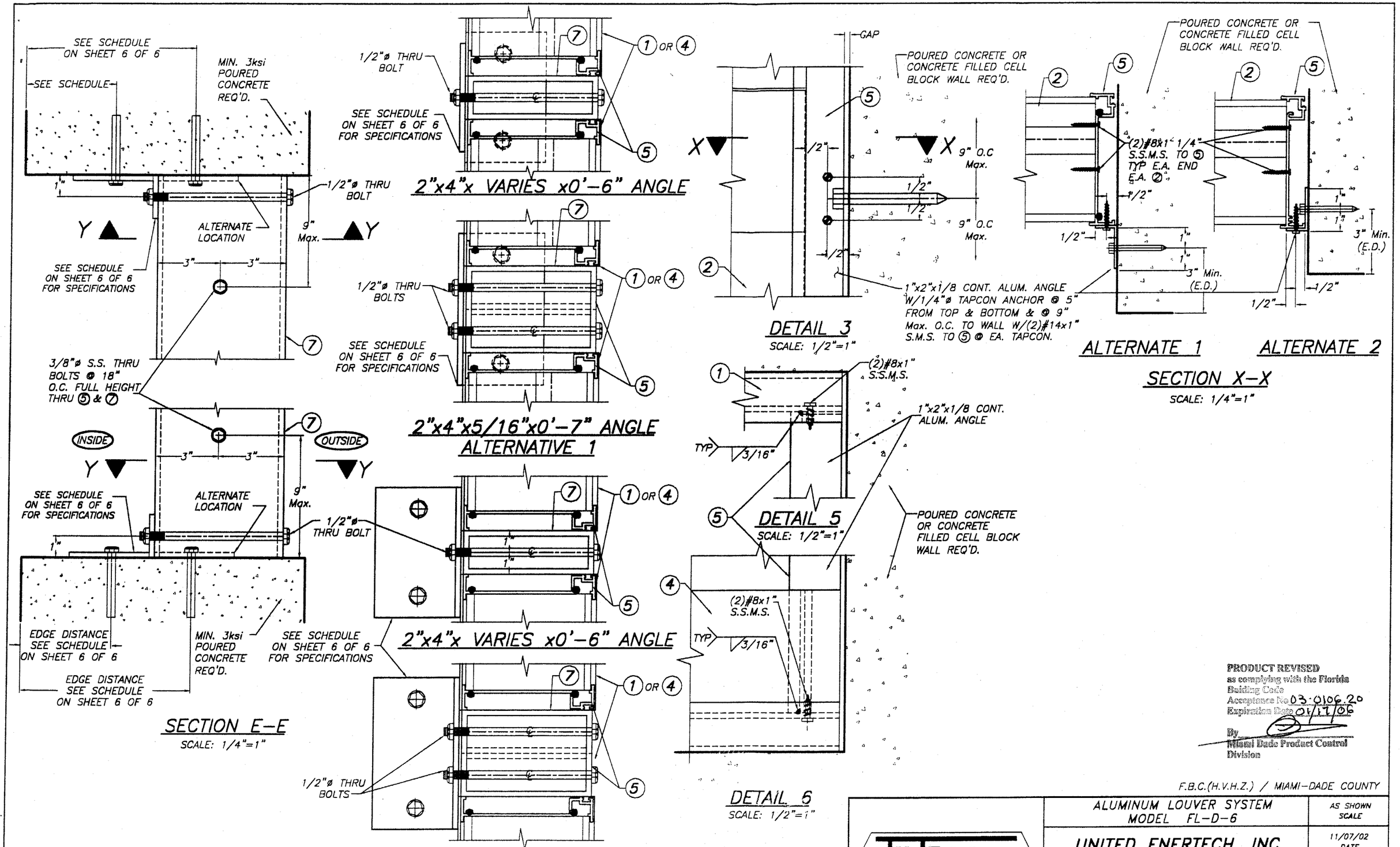

PRODUCT REVISED
as complying with the Florida Building Code
Acceptance No 03-0106.20
Expiration Date 01/17/06
By
Miami Dade Product Control Division

F.B.C.(H.V.H.Z.) / MIAMI-DADE COUNTY

TILLECO INC.
TILLIT TESTING & ENGINEERING COMPANY
6595 N.W. 36th. St., Ste. 217, VIRGINIA GARDENS, Fl. 33166
Phone : (305)871-1530 , Fax : (305)871-1531
EB-0006719
WALTER A. TILLIT Jr. P. E.
FLORIDA Lic. # 44167

ALUMINUM LOUVER SYSTEM
MODEL FL-D-6

UNITED ENERTECH, INC.
3101 SOUTH ORCHARD KNOB AVE.
CHATTANOOGA, TN, 37407

REV. No	DESCRIPTION	DATE	REV. No	DESCRIPTION	DATE
1	OLD 01-131	11/07/02	3	-	-
2	-	-	4	-	-

AS SHOWN
SCALE

11/07/02
DATE

02-523
DRAWING No

SHEET 5 OF 6

MAXIMUM MULLION HEIGHT (FT) AND CORRESPONDING MULLION SIZE W/ CONNECTION SCHEDULE.

Max. MULLION HEIGHT @ 150 psf & 6'-0" Max. CLEAR SPACING BETWEEN MULLIONS	Min. MULLION SIZE REQ'D.	REQUIREMENTS INSTALLATION FOR MULLION CONNECTION				
		ANGLE	TRAPPED			THRU BOLT
			ANCHORS SIZE	MIN. EMBEDMENT (IN)	MIN. EGDE DISTANCE (E.D.)	
6'-0"	2"x6"x1/4"	2"x4"x1/4"x0'-6"	(2)1/2"ø POWER BOLTS	3"	4"	(1)1/2"ø
7'-11"	2"x6"x1/4"	2"x4"x5/16"x0'-6"	(2)1/2"ø POWER BOLTS	3"	6"	(1)1/2"ø
9'-2"	4"x6"x1/4" OR (2) 2"x6"x1/4"	2"x4"x5/16"x0'-7"	(2)5/8"ø POWER BOLTS	4"	7 1/2"	(2)1/2"ø
12'-0"	4"x8"x1/4"	2"x4"x5/16"x0'-7"	(2)5/8"ø POWER BOLTS	4"	7 1/2"	(2)1/2"ø

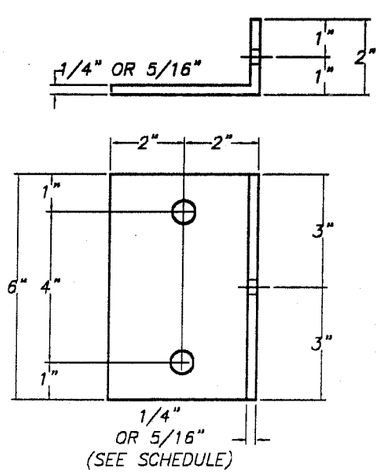

2"x4"x1/4"x0'-6" OR
2"x4"x5/16"x0'-6"
ALUM. ANGLE

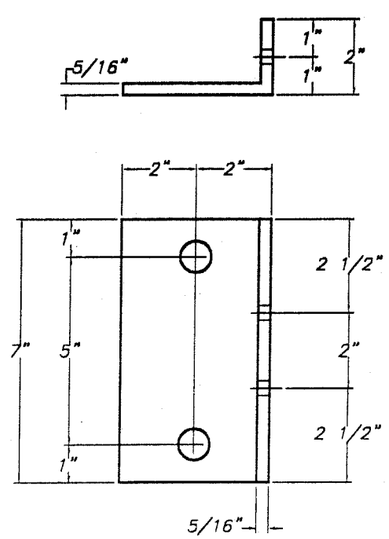

2"x4"x5/16"x0'-7"
ALUM. ANGLE

12/19/02

PRODUCT REVISED
as complying with the Florida Building Code
Acceptance No 03-0106.20
Expiration Date 01/17/06
By
Miami-Dade Product Control Division

F.B.C.(H.V.H.Z.) / MIAMI-DADE COUNTY

TILTECO INC.
TILLIT TESTING & ENGINEERING COMPANY
6595 N.W. 36th. St., Ste. 217, VIRGINIA GARDENS, FL 33166
Phone : (305)871-1530 . Fax : (305)871-1531
EB-0006719
WALTER A. TILLIT Jr. P. E.
FLORIDA Lic. # 44167

ALUMINUM LOUVER SYSTEM
MODEL FL-D-6

UNITED ENERTECH, INC.
3101 SOUTH ORCHARD KNOB AVE.
CHATTANOOGA, TN, 37407

REV. No	DESCRIPTION	DATE	REV. No	DESCRIPTION	DATE
1	OLD 01-131	11/07/02	3	-	-
2	-	-	4	-	-

AS SHOWN
SCALE

11/07/02
DATE

02-523
DRAWING No

SHEET 6 OF 6