MIAMI-DADE

BUILDING CODE COMPLIANCE OFFICE (BCCO)
PRODUCT CONTROL DIVISION

MIAMI-DADE COUNTY, FLORIDA
METRO-DADE FLAGLER BUILDING
140 WEST FLAGLER STREET, SUITE 1603
MIAMI, FLORIDA 33130-1563
(305) 375-2901 FAX (305) 375-2908

# NOTICE OF ACCEPTANCE (NOA)

**Armor Screen Corporation**
**2001-A North Congress Ave.**
**Riviera Beach, FL 33404**

## SCOPE:

This NOA is being issued under the applicable rules and regulations governing the use of construction materials. The documentation submitted has been reviewed by Miami-Dade County Product Control Division and accepted by the Board of Rules and Appeals (BORA) to be used in Miami Dade County and other areas where allowed by the Authority Having Jurisdiction (AHJ).

This NOA shall not be valid after the expiration date stated below. The Miami-Dade County Product Control Division (In Miami Dade County) and/or the AHJ (in areas other than Miami Dade County) reserve the right to have this product or material tested for quality assurance purposes. If this product or material fails to perform in the accepted manner, the manufacturer will incur the expense of such testing and the AHJ may immediately revoke, modify, or suspend the use of such product or material within their jurisdiction. BORA reserves the right to revoke this acceptance, if it is determined by Miami-Dade County Product Control Division that this product or material fails to meet the requirements of the applicable building code.

This product is approved as described herein, and has been designed to comply with the High Velocity Hurricane Zone of the Florida Building Code.

**DESCRIPTION: "Armor Screen Series 2000" Flexible Wind Abatement System**

**APPROVAL DOCUMENT:** Drawing No. **AS-001**, titled "Armor Screen Series 2000 Wind Abatement System", sheets 1 through 6 of 6, prepared by Thomas J. Rogers, P.E., dated June 28, 1998, signed and sealed by Thomas J. Rogers, P.E., bearing the Miami-Dade County Product Control Renewal stamp with the Notice of Acceptance number and expiration date by the Miami-Dade County Product Control Division.

**MISSILE IMPACT RATING: Large and Small Missile Impact**

**LABELING:** Each screen shall bear a permanent label with the manufacturer's name or logo, city, state and the following statement: "Miami-Dade County Product Control Approved", unless otherwise noted herein.

**RENEWAL** of this NOA shall be considered after a renewal application has been filed and there has been no change in the applicable building code negatively affecting the performance of this product.

**TERMINATION** of this NOA will occur after the expiration date or if there has been a revision or change in the materials, use, and/or manufacture of the product or process. Misuse of this NOA as an endorsement of any product, for sales, advertising or any other purposes shall automatically terminate this NOA. Failure to comply with any section of this NOA shall be cause for termination and removal of NOA.

**ADVERTISEMENT:** The NOA number preceded by the words Miami-Dade County, Florida, and followed by the expiration date may be displayed in advertising literature. If any portion of the NOA is displayed, then it shall be done in its entirety.

**INSPECTION:** A copy of this entire NOA shall be provided to the user by the manufacturer or its distributors and shall be available for inspection at the job site at the request of the Building Official.

This NOA **renews NOA # 99-0526.01** and, consists of this page 1 as well as approval document mentioned above. The submitted documentation was reviewed by **Helmy A. Makar, P.E.**

PRODUCT CONTROL ACCEPTED

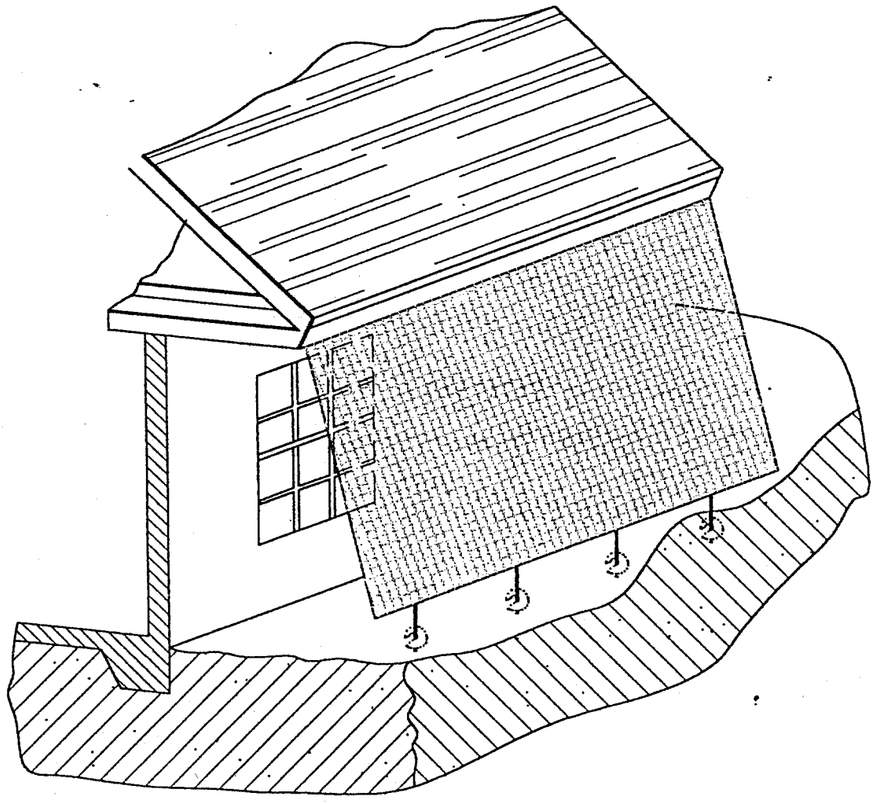

THIS RENDERING NOT TO SCALE

| Table No. 1. Minimum Glass Clearances | |
|---|---|
| Maximum Span | Min. Clearance |
| 11'-0" | 22" |

MAXIMUM DESIGN PRESSURE ±45.0 PSF
MAXIMUM SCREEN SPAN = 11'-0"

GENERAL NOTES:

THIS WIND ABATEMENT SYSTEM IS DESIGNED IN ACCORDANCE WITH 2001 EDITION OF THE FLORIDA BUILDING CODE.

FURTHER, THIS SYSTEM HAS BEEN TESTED IN ACCORDANCE WITH THE SOUTH FLORIDA BUILDING CODE, 1994 EDITION, LATEST EDITION AND SUPPLEMENTS, FOR IMPACT STATIC LOAD, AND CYCLIC FATIGUE RESISTANCE PER PA-201, PA-202 AND PA-203.

GEOSYNTHETIC HURRICANE SCREEN: THE HURRICANE SCREEN SHALL BE PRODUCED FROM A POLYPROPYLENE, WOVEN MONOFILAMENT GEOTEXTILE FABRIC WITH INDIVIDUAL FILAMENTS WOVEN INTO A BASKET WEAVE NETWORK AND CALENDERED SUCH THAT THE FILAMENTS RETAIN DIMENSIONAL STABILITY RELATIVE TO EACH OTHER.. THE WOVEN MONOFILAMENT GEOTEXTILE FABRIC SHALL HAVE THE FOLLOWING MINIMUM AVERAGE ROLL VALUES:

| | | |
|---|---|---|
| GRAB TENSILE STRENGTH | (ASTM D4632) | 425x 325 LBS |
| PUNCTURE STRENGTH | (ASTM D4833) | 130 LBS |
| MULLEN BURST | (ASTM D3786) | 675 PSI |
| TRAPEZOIDAL TEAR | (ASTM D4533) | 150x 125 LBS |
| WIDE WIDTH TENSILE STRENGTH | (ASTM D4595) | 255x 205 LBS/IN |
| WIDE WIDTH ELONGATION | (ASTM D4595) | 22x 21% |
| PERCENTAGE OF OPEN AREA | | 5% |
| APPARENT OPENING SIZE | | 30 US STD SIEVE. |

ANCHORS:

LAG BOLTS: 1/2"ø LAG BOLTS WITH TURNED EYE SHALL BE A-307, WITH 2 1/2" PENETRATION IN SOUTHERN PINE WOOD MEMBER WITH G VALUE = 0.55 (MIN.)

DROP-IN ANCHOR: 1/2"ø RAWL STEEL DROP-IN ANCHOR IN 3000 PSI (MIN.) CONCRETE WITH 2" MIN. EMBED.

EARTH ANCHORS: 4" DIAMETER SINGLE HELIX ANCHOR WITH 1/2"ø x 30" MIN. ROD AS MANUFACTURED BY "A.B. CHANCE COMPANY", OR APPROVED SUBSTITUTE WITH A 4" HELIX HAVING THE FOLLOWING MINIMUM ANCHOR ULTIMATE HOLDING CAPACITIES:

SOIL CLASS: 5 (MEDIUM DENSE COARSE SAND) 4050 LBS

ALL GEOSYNTHETIC HURRICANE SCREEN ASSEMBLY INSTALLATION DETAILS DEPICTED WITHIN THESE DRAWINGS ARE TYPICAL FOR THE INSTALLATION OF THIS WIND ABATEMENT SYSTEM ONLY. ALL OTHER BUILDING COMPONENTS SHOWN HEREIN ARE DEPICTED AS EXISTING, AND NOT CONSTRUCTED BY THE SCREEN COMPANY. ALL SCREENS SHALL BE INSTALLED SNUG TIGHT.

REVISIONS

PRODUCT RENEWED as complying with the Florida Building Code
Acceptance No. 03-0108.04
Expiration Date 01/07/2008
By Miami Dade Product Control Division

APPROVED AS COMPLYING WITH THE SOUTH FLORIDA BUILDING CODE
DATE January 07-2000
BY
PRODUCT CONTROL DIVISION
BUILDING CODE COMPLIANCE OFFICE
ACCEPTANCE NO. 99-0526.01

Thomas J. Rogers, P.E.
Structural Engineering Consultant
375 River Edge Road Phone (561) 745-7097
Jupiter, Florida Fax (561) 745-5634
12/16/99
FLA. REG. NO. 44124

ARMOR SCREEN COROPRATION
8011 Monetary Drive, Suite A-2, Riviera Beach, FL 33404
Ph: (561)841-8890 Fax: (561)841-8892 ted@armorscreen.com

PRODUCT:
ARMOR SCREEN SERIES 2000
WIND ABATEMENT SYSTEM

DATE: 6-28-98
DRAWN BY: RP
JOB NO.: 98-100-AS
SCALE: NO SCALE

DWG NO. AS-001
SHEET NO. 1 OF 6

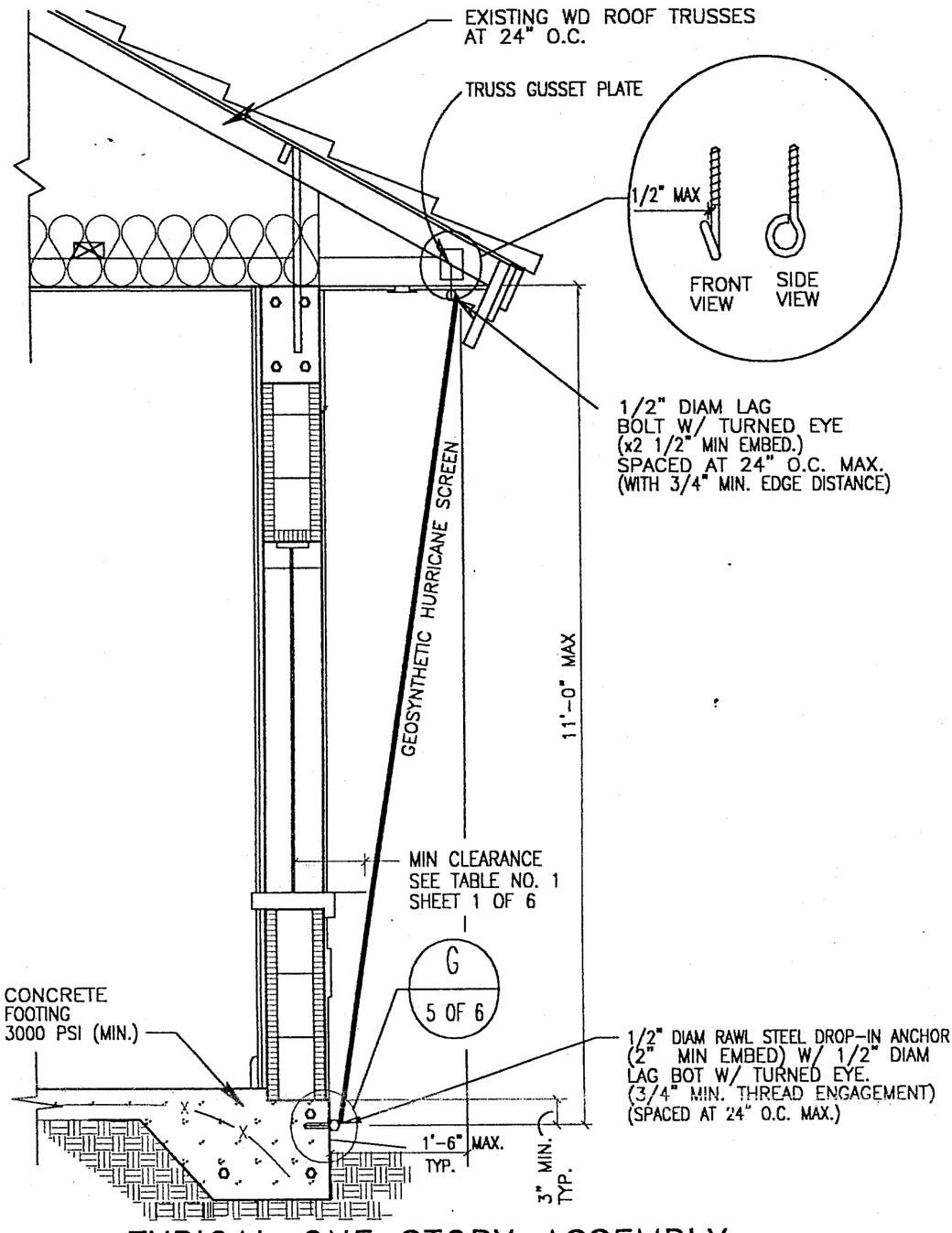


# TYPICAL ONE STORY ASSEMBLY INSTALLATION

A
2 OF 6
SCALE:3/4" = 1'-0"

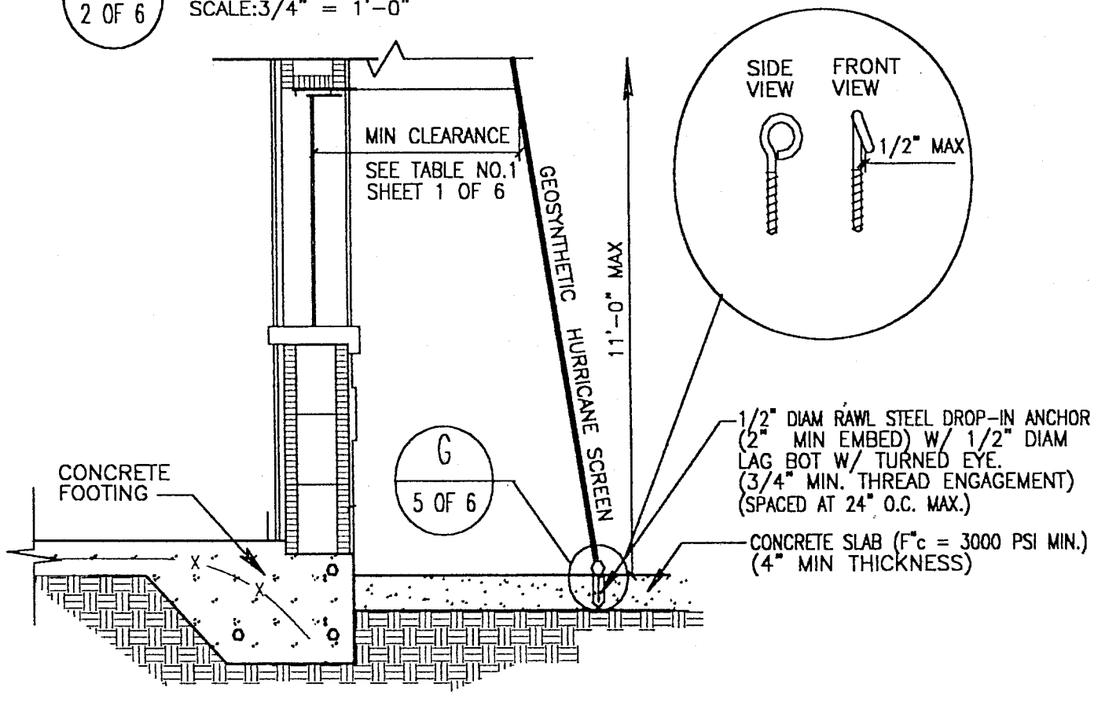


# ALTERNATE ASSEMBLY INSTALLATION AT EXTERIOR SLAB

B
2 OF 6
SCALE:3/4" = 1'-0"

REVISIONS

PRODUCT RENEWED as complying with the Florida Building Code Acceptance No 03-0108.04 Expiration Date 01/07/2008
By Helmy H. Malek
Miami Dade Product Control Division

APPROVED AS COMPLYING WITH THE SOUTH FLORIDA BUILDING CODE
DATE January 07-2000
BY Helmy H. Malek
PRODUCT CONTROL DIVISION
BUILDING CODE COMPLIANCE OFFICE
ACCEPTANCE NO. 99-0526.01

Thomas J. Rogers, P.E.
Structural Engineering Consultant
375 River Edge Road Jupiter, Florida Phone (561) 745-7097 Fax (561) 745-5634
T. Rogers 12/16/99
FLA. REG. NO. 44124

ARMOR SCREEN COROPRATION
8011 Monetary Drive, Suite A-2, Riviera Beach, FL 33404
Ph: (561)841-8890 Fax: (561)841-8892 ted@armorscreen.com

PRODUCT:
ARMOR SCREEN SERIES 2000
WIND ABATEMENT SYSTEM

DATE: 6-28-98
DRAWN BY: RP
JOB NO.: 98-100-AS
SCALE: NO SCALE

DWG NO. AS-001
SHEET NO. 2 OF 6

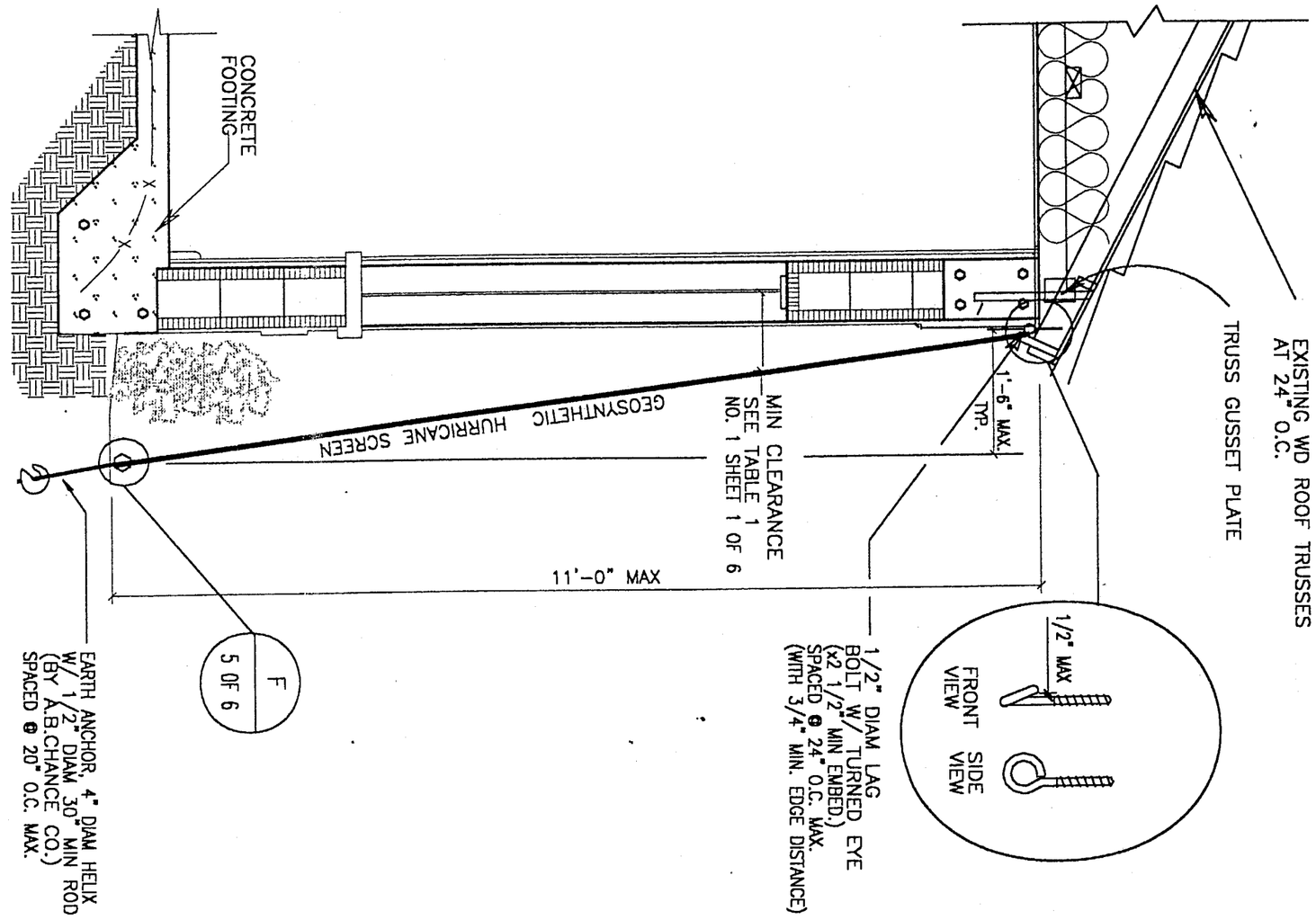


# ALTERNATE ASSEMBLY INSTALLATION INTO EARTH

C
3 OF 6

SCALE:3/4" = 1'-0"

REVISIONS

**PRODUCT RENEWED**
as complying with the Florida Building Code
Acceptance No 03-0108.04
Expiration Date 01/07/2008
By Helmy H. Mahr
Miami Dade Product Control Division

APPROVED AS COMPLYING WITH THE SOUTH FLORIDA BUILDING CODE
DATE January 07-2000
BY Helmy H. Mahr
PRODUCT CONTROL DIVISION
BUILDING CODE COMPLIANCE OFFICE
ACCEPTANCE NO. 99-0526.01

Thomas J. Rogers, P.E.
Structural Engineering Consultant
375 River Edge Road Phone (561) 745-7097
Jupiter, Florida Fax (561) 745-5634
T. Rogers
12/16/99
FLA. REG. NO. 44124

**ARMOR SCREEN CORPORATION**
8011 Monetary Drive, Suite A-2, Riviera Beach, FL 33404
Ph: (561)841-8890 Fax: (561)841-8892 ted@armorscreen.com

PRODUCT:
ARMOR SCREEN SERIES 2000
WIND ABATEMENT SYSTEM

DATE: 6-28-98
DRAWN BY: RP
JOB NO.: 98-100-AS
SCALE: NO SCALE

DWG NO. AS-001
SHEET NO. 3 OF 6

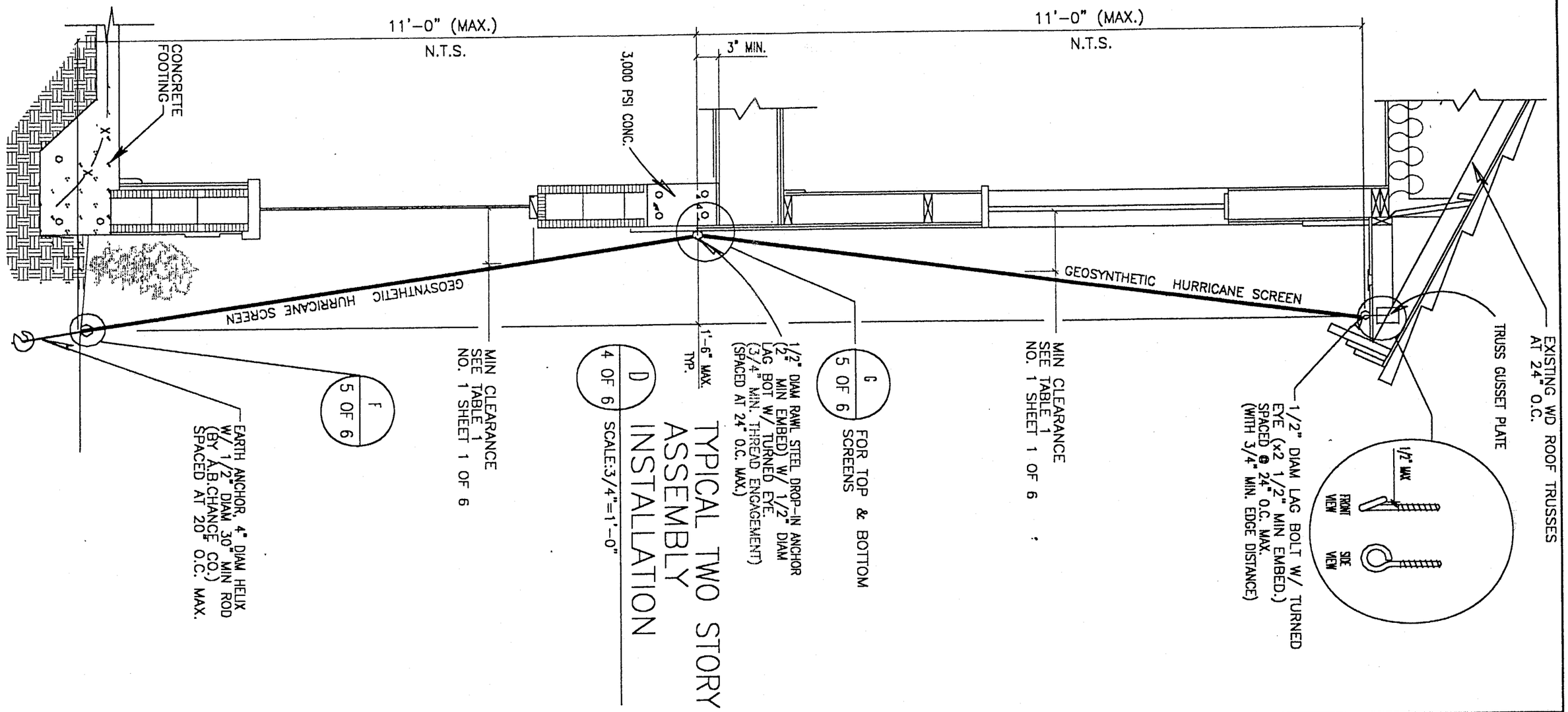


REVISIONS

**ARMOR SCREEN COROPRATION**

8011 Monetary Drive, Suite A-2, Riviera Beach, FL 33404
Ph: (561)841-8890 Fax: (561)841-8892 ted@armorscreen.com

PRODUCT:
ARMOR SCREEN SERIES 2000
WIND ABATEMENT SYSTEM

Thomas J. Rogers, P.E.
Structural Engineering Consultant
375 River Edge Road Jupiter, Florida
Phone (561) 745-7097
Fax (561) 745-5634
T. Rogers 12/16/99
FLA. REG. NO. 44124

APPROVED AS COMPLYING WITH THE SOUTH FLORIDA BUILDING CODE
DATE January 07, 2000
BY Helmy A. Mahr
PRODUCT CONTROL DIVISION
BUILDING CODE COMPLIANCE OFFICE
ACCEPTANCE NO. 99-0526.01

**PRODUCT RENEWED**
**as complying with the Florida Bulding Code**
**Acceptance No** 03-0108.04
**Expiration Date** 01/07/2008
**By** Helmy A. Mahr
**Miami Dade Product Control Division**

DATE: 6-28-98
DRAWN BY: RP
JOB NO.: 98-100-AS
SCALE: NO SCALE

DWG NO. AS-001
SHEET NO.4 OF 6

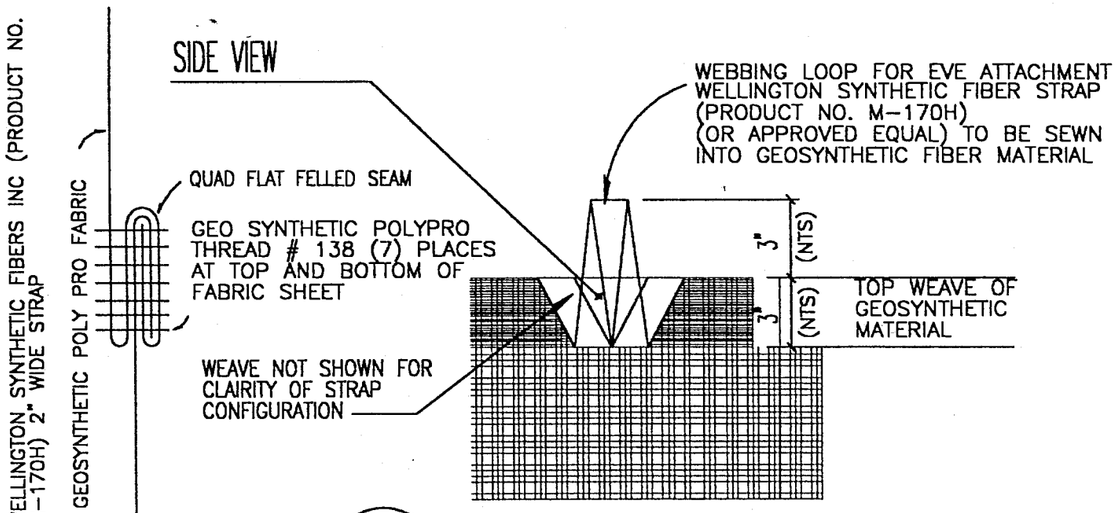


E
5 OF 6

## TOP STRAP DETAIL

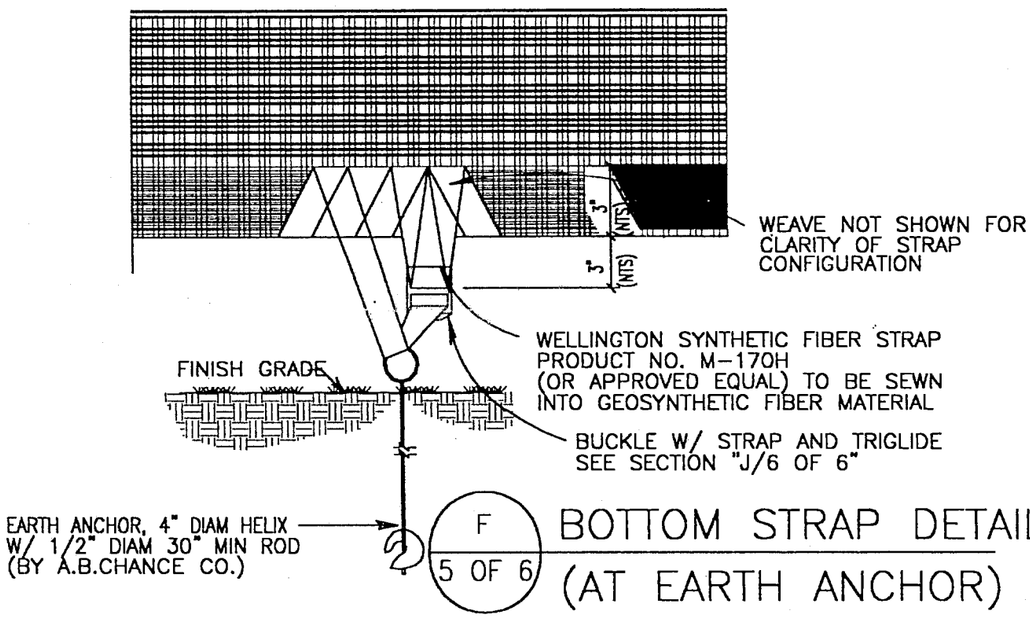


F
5 OF 6

## BOTTOM STRAP DETAIL (AT EARTH ANCHOR)

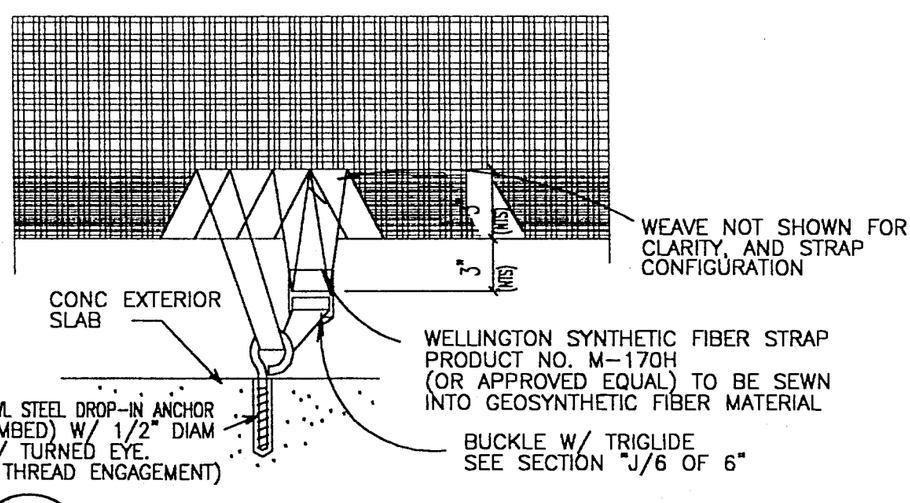


G
5 OF 6

## BOTTOM STRAP DETAIL (AT ANCHORAGE INTO CONCRETE)

REVISIONS

PRODUCT RENEWED as complying with the Florida Building Code Acceptance No. 03-0108.04 Expiration Date 01/07/2008 By Miami Dade Product Control Division

APPROVED AS COMPLYING WITH THE SOUTH FLORIDA BUILDING CODE DATE January 07, 2000 BY PRODUCT CONTROL DIVISION BUILDING CODE COMPLIANCE OFFICE ACCEPTANCE NO. 99-0526.01

Thomas J. Rogers, P.E.
Structural Engineering Consultant
375 River Edge Road Jupiter, Florida
Phone (561) 745-7097 Fax (561) 745-5634
12/16/98
FLA. REG. NO. 44124

ARMOR SCREEN COROPRATION
8011 Monetory Drive, Suite A-2, Riviera Beach, FL 33404
Ph: (561)841-8890 Fax: (561)841-8892 ted@armorscreen.com

PRODUCT:
ARMOR SCREEN SERIES 2000
WIND ABATEMENT SYSTEM

DATE: 6-28-98
DRAWN BY: RP
JOB NO.: 98-100-AS
SCALE: NO SCALE

DWG NO. AS-001
SHEET NO. 5 OF 6

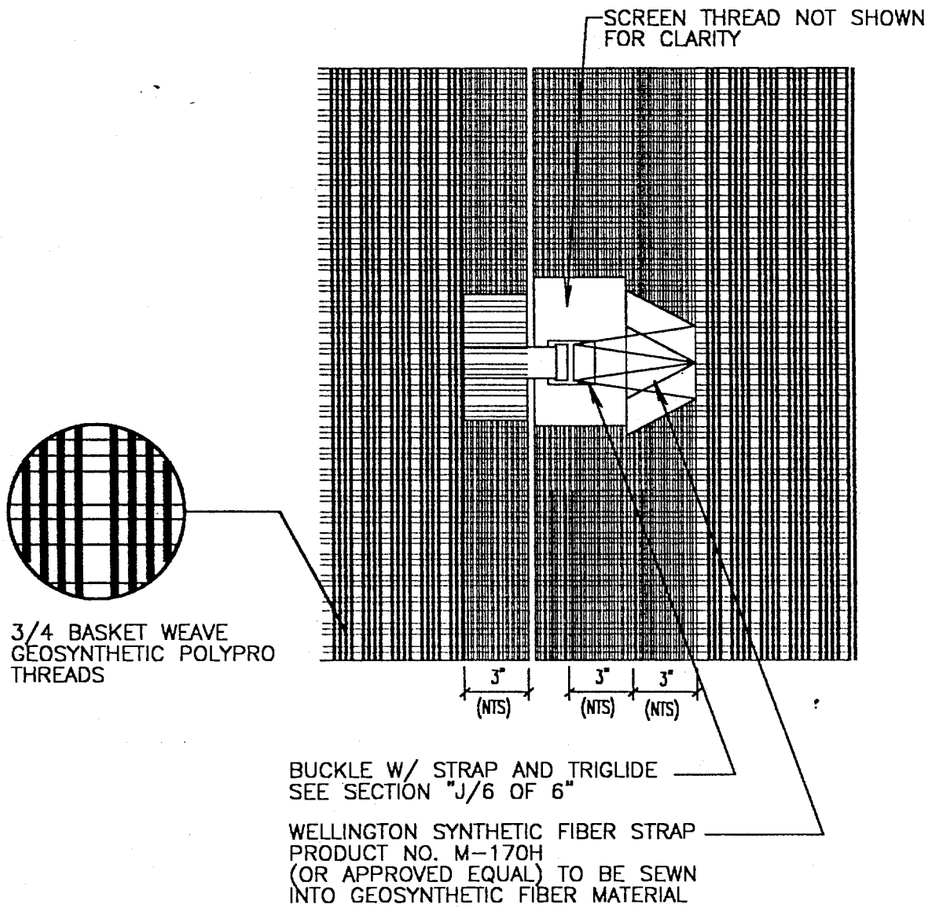


H / 6 OF 6 — STRAP DETAIL AT ADJACENT SCREENS

(SCREEN SHALL HAVE 2.0" OVERLAP) (MIN.)

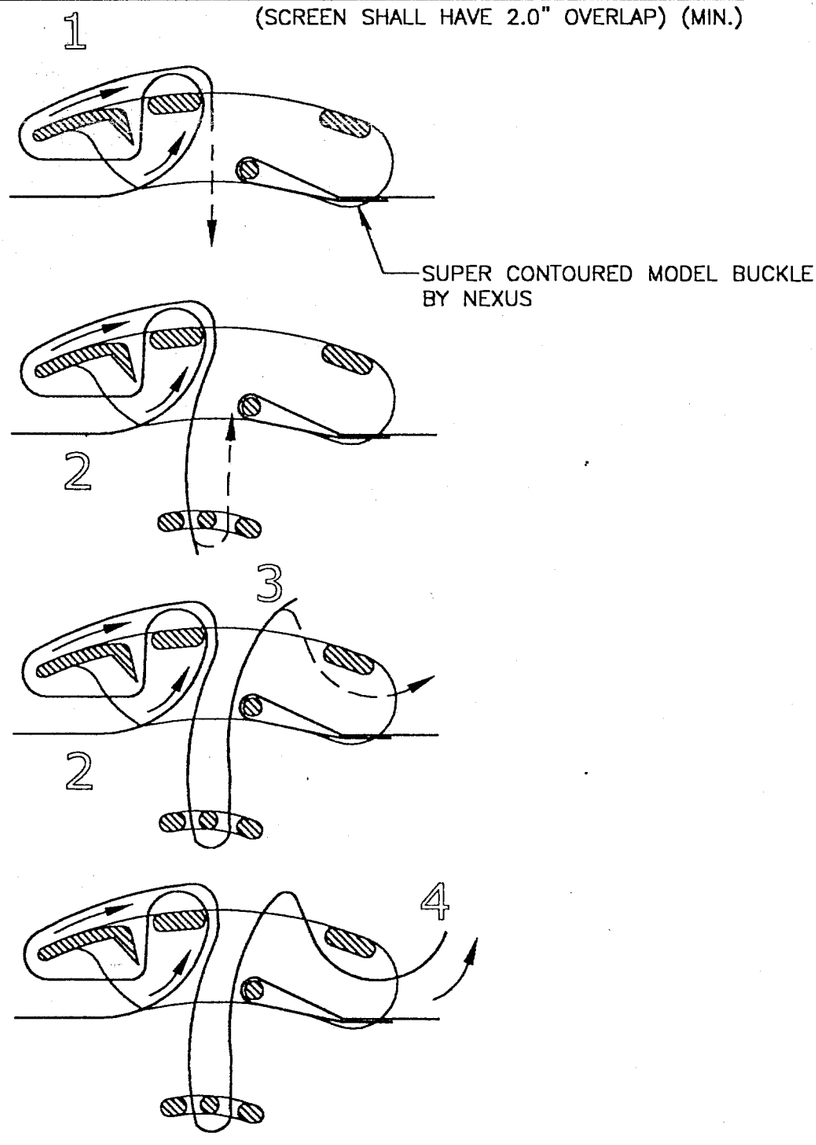


J / 6 OF 6 — BUCKLE CROSS SECTION W/ STRAP PATH

REVISIONS

PRODUCT RENEWED as complying with the Florida Building Code Acceptance No. 03-0108.04 Expiration Date 07/07/09 By Miami Dade Product Control Division

APPROVED AS COMPLYING WITH THE SOUTH FLORIDA BUILDING CODE DATE 12 June 07, 2000 BY PRODUCT CONTROL DIVISION BUILDING CODE COMPLIANCE OFFICE ACCEPTANCE NO. 99-0526.01

Thomas J. Rogers, P.E.
Structural Engineering Consultant
375 River Edge Road Jupiter, Florida
Phone (561) 745-7097 Fax (561) 745-5534
12/11/09
FLA. REG. NO. 44124

ARMOR SCREEN COROPRATION
8011 Monetary Drive, Suite A-2, Riviera Beach, FL 33404
Ph: (561)841-8890 Fax: (561)841-8892 ted@armorscreen.com

PRODUCT: ARMOR SCREEN SERIES 2000 WIND ABATEMENT SYSTEM

DATE: 6-28-98
DRAWN BY: RP
JOB NO.: 98-100-AS
SCALE: NO SCALE

DWG NO. AS-001

SHEET NO. 6 OF 6