MIAMI-DADE

BUILDING CODE COMPLIANCE OFFICE (BCCO)
PRODUCT CONTROL DIVISION

MIAMI-DADE COUNTY, FLORIDA
METRO-DADE FLAGLER BUILDING
140 WEST FLAGLER STREET, SUITE 1603
MIAMI, FLORIDA 33130-1563
(305) 375-2901 FAX (305) 375-2908

NOTICE OF ACCEPTANCE (NOA)

Therma-Tru Corporation
1687 Woodlands Drive
Maumee. OH 43537

SCOPE:
This NOA is being issued under the applicable rules and regulations governing the use of construction materials. The documentation submitted has been reviewed by Miami-Dade County Product Control Division and accepted by the Board of Rules and Appeals (BORA) to be used in Miami Dade County and other areas where allowed by the Authority Having Jurisdiction (AHJ).

This NOA shall not be valid after the expiration date stated below. The Miami-Dade County Product Control Division (In Miami Dade County) and/or the AHJ (in areas other than Miami Dade County) reserve the right to have this product or material tested for quality assurance purposes. If this product or material fails to perform in the accepted manner, the manufacturer will incur the expense of such testing and the AHJ may immediately revoke, modify, or suspend the use of such product or material within their jurisdiction. BORA reserves the right to revoke this acceptance, if it is determined by Miami-Dade County Product Control Division that this product or material fails to meet the requirements of the applicable building code.
This product is approved as described herein, and has been designed to comply with the High Velocity Hurricane Zone of the Florida Building Code.

DESCRIPTION: Series "Landmark" Opaque Outswing Residential Insulated Steel Doors w/Sidelites

APPROVAL DOCUMENT: Drawing No. **S-2002**, titled "Landmark Steel Edge Insulated Steel Door with Wood Frame", sheets 1 through 6 of 6, prepared by the Rick Wright Building Consulting, Inc., dated 2/24/00 with revision on 5/18/00, bearing the Miami-Dade County Product Control Renewal stamp with the Notice of Acceptance number and expiration date by the Miami-Dade County Product Control Division.

MISSILE IMPACT RATING: Large and Small Missile Impact

LABELING: Each unit shall bear a permanent label with the manufacturer's name or logo, city, state and following statement: "Miami-Dade County Product Control Approved", unless otherwise noted herein.

RENEWAL of this NOA shall be considered after a renewal application has been filed and there has been no change in the applicable building code negatively affecting the performance of this product.

TERMINATION of this NOA will occur after the expiration date or if there has been a revision or change in the materials, use, and/or manufacture of the product or process. Misuse of this NOA as an endorsement of any product, for sales, advertising or any other purposes shall automatically terminate this NOA. Failure to comply with any section of this NOA shall be cause for termination and removal of NOA.

ADVERTISEMENT: The NOA number preceded by the words Miami-Dade County, Florida, and followed by the expiration date may be displayed in advertising literature. If any portion of the NOA is displayed, then it shall be done in its entirety.

INSPECTION: A copy of this entire NOA shall be provided to the user by the manufacturer or its distributors and shall be available for inspection at the job site at the request of the Building Official.
This NOA **renews NOA # 99-1220.03** and, consists of this page 1 as well as approval document mentioned above.
The submitted documentation was reviewed by **Jaime Eisen, P.E.**

Therma-Tru Corporation

NOTICE OF ACCEPTANCE: EVIDENCE SUBMITTED

(For File ONLY. Not part of NOA)

A. DRAWINGS

1. Manufacturer's die drawings and sections.
2. Drawing No. **S-2002**, titled "Landmark Steel Edge Insulated Steel Door with Wood Frame", sheets 1 through 6 of 6, prepared by the Rick Wright Building Consulting, Inc., dated 2/24/00 with revision on 5/18/00.

B. TESTS

Submitted under NOA#99-1220.03

1. Test reports on 1) Air Infiltration Test, per FBC, TAS 202-94
   2) Uniform Static Air Pressure Test, Loading per FBC,TAS 202-94
   3) Water Resistance Test, per FBC, TAS 202-94
   4) Large Missile Impact Test per FBC, TAS 201-94
   5) Cyclic Wind Pressure Loading per FBC, TAS 203-94
   6) Forced Entry Test, per FBC 2411 3.2.1 and TAS 202-94

   along with marked-up drawings and installation diagram of outswing and inswing along with installation diagram of pairs of residential insulated steel doors with a glazed sidelites and wood frame, outswing and inswing; prepared by Certified Testing Laboratories, Test Report No. **CTLA510W**, dated February 11, 2000, with addendum dated June 2, 2000, signed and sealed by Ramesh C. Patel, P.E.

C. CALCULATIONS

Submitted under NOA#99-1220.03

1. Anchor Calculations and structural analysis, dated 2/15/00, prepared, signed and sealed by Mark Fetherman, P.E.

D. MATERIAL CERTIFICATIONS

Submitted under NOA#99-1220.03

1. Certified Tensile Test Report issued by Certified Testing Laboratories, Test Report No. **CTL-112F**, dated February 1, 2000, tested per ASTM E8/A370 or B557, signed and sealed by Ramesh C. Patel, P.E
2. Test report on "20 min. vertical, full scale "Fire Endurance and a Hose Stream Test for Door Assemblies" per ASTM E-152 for steel door with polystyrene foam core, prepared by ITS Intertek Testing Services Test Report No. J97027616a-231 dated January 9, 1998.
3. Test report on "20 min. vertical full scale "Fire Endurance and a Hose Stream Test for Door Assemblies" per ASTM E-152 for steel door with polyurethane foam core, prepared by Inchcape Testing Services Warnock Hershey International, Inc. Test Report No. 14212-231 dated September 20, 1996.

Jaime Eisen, P.E.
Product Control Examiner
NOA No 03-0109.08
Expiration Date: June 15, 2008
Approval Date: February 20, 2003

Therma-Tru Corporation

NOTICE OF ACCEPTANCE: EVIDENCE SUBMITTED
(For File ONLY. Not part of NOA)

E. STATEMENTS

1. Statement letter of no change, prepared by R.W. Building Consultants, Inc., dated 12/22/02.

F. OTHER

1. Notice of Acceptance No. **99-1220.03**, General Products, Co., Inc., Landmark" Opaque Outswing Residential Insulated Steel Doors w/Sidelites, approved on 6/15/00 and expiring on 6/15/03.

Jaime Eisen, P.E.
Product Control Examiner
NOA No 03-0109.08
Expiration Date: June 15, 2008
Approval Date: February 20, 2003

LANDMARK

OUTSWING INSULATED STEEL DOOR WITH WOOD FRAMES

GENERAL NOTES

1. THIS PRODUCT IS DESIGNED TO MEET THE SOUTH FLORIDA BUILDING CODE 1994 EDITION FOR MIAMI–DADE COUNTY.
2. WOOD BUCKS BY OTHERS, MUST BE ANCHORED PROPERLY TO TRANSFER LOADS TO THE STRUCTURE.
3. PRODUCT ANCHORS SHALL BE AS LISTED AND SPACED AS SHOWN ON DETAILS. ANCHOR EMBEDMENT TO BASE MATERIAL SHALL BE BEYOND WALL DRESSING OR STUCCO.
4. IMPACT RESISTANT SHUTTERS REQUIRED FOR SIDELITES.
5. DESIGNED PRESSURE RATING SHALL BE AS FOLLOWS: –SEE DESIGN PRESSURE RATING TABLE SHEET ONE.
6. SIDELITES ARE AN OPTION AND CAN BE IN A SINGLE OR DOUBLE CONFIGURATION. (OX, XO, OXO, OXXO)
7. THE ONE–PIECE BARRIER FREE THRESHOLD SYSTEM DOES* NOT MEET THE WATER REQUIREMENTS IN MIAMI–DADE COUNTY. THIS SYSTEM WAS TESTED FOR 2.86psf OF WATER PRESSURE AS PER ASTM E–331

RESIDENTIAL INSULATED STEEL DOOR
(Common to all frame conditions)

Door Leaf Construction:
Face sheets: 25 ga. (0.019") minimum thickness, Galvanized steel A–525 commercial quality – AKDQ per ASTM 620 with yield strength Fy(min.)=19,000 psi.
Core design: Polyurethane core, two–parts Isocyanate Resin components foam, with 2.15 lbs. density.
Construction: Flush or embossed type. The vertical edges are extensions of the skin, rolled formed to a mechanical interlock, horizontal edges are welded together at two places each.
Door Frame Construction: The head jambs and side jambs are finger jointed pine and are mortised and joined using 7/8" X 2" wire staples.
Sidelite Panel Construction: Panel is 1 3/8" thick and is constructed from 25ga. (0.019") thick galvanized steel skins. The interior cavity of each sidelite panel is filled with polystyrene (1.0 to 1.25 lb. density).

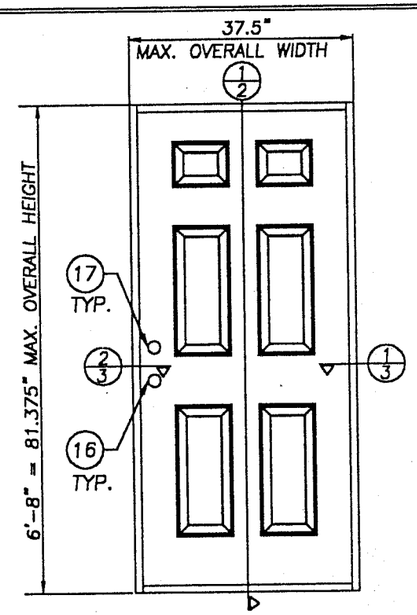

SINGLE DOOR ELEVATION

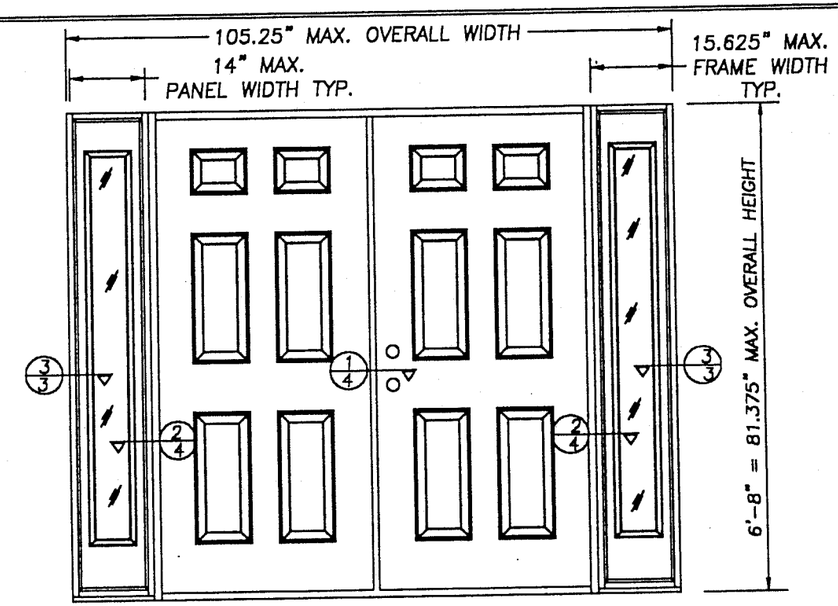

DOUBLE DOOR W/SIDELITES ELEVATION

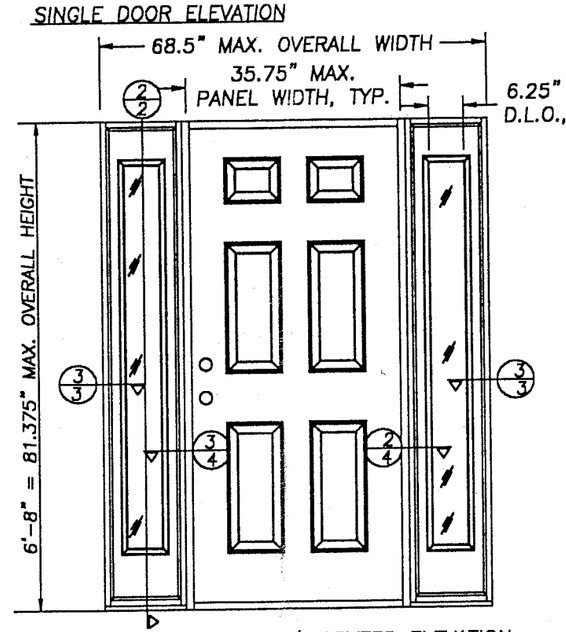

SINGLE DOOR W/SIDELITES ELEVATION

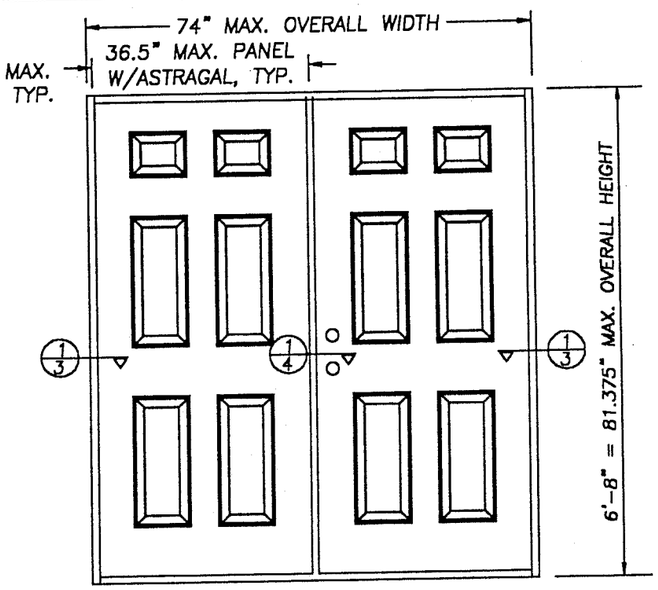

DOUBLE DOOR ELEVATION

COLONIAL 6 PANEL DOOR SHOWN FOR CLARITY OF VIEW (VIEWED INTERIOR)

TABLE OF CONTENTS

SHEET #	DESCRIPTION
1	COMMON (GENERAL NOTES, TYPICAL ELEVATION)
2	VERTICAL CROSS SECTIONS & BILL OF MATERIALS
3	HOIZONTAL CROSS SECTIONS (1/3, 2/3 & 3/3)
4	HOIZONTAL CROSS SECTIONS (1/4, 2/4 & 3/4)
5	ANCHORING LOCATIONS & GLAZING DETAILS
6	ANCHORING LOCATIONS & DOOR MODELS

DESIGN PRESSURE RATING	
	WHERE WATER INFILTRATION REQUIREMENT IS NEEDED
POSITIVE	+ 50.0 PSF
NEGATIVE	– 50.0 PSF

PRODUCT RENEWED
as complying with the Florida Buiding Code
Acceptance No 03-0109.08
Expiration Date 06/15/08
By
Miami Dade Product Control Division

APPROVED AS COMPLYING WITH THE SOUTH FLORIDA BUILDING CODE
DATE June 15, 2000
BY Manuel Serra
PRODUCT CONTROL DIVISION
BUILDING CODE COMPLIANCE OFFICE
ACCEPTANCE NO. 99-1220.03

GENERAL PRODUCTS CO. INC.
P.O. BOX 7387
FREDERICKSBURG, VA 22404
PH. (540) 898–5700

PRODUCT: LANDMARK STEEL EDGE INSULATED STEEL DOOR WITH WOOD FRAME

PART OR ASSEMBLY: GENERAL NOTES AND ELEVATIONS

NO.	DATE	REVISIONS	BY
1	5/18/00	GENERAL REVISION	TJH

RW BUILDING CONSULTANTS, INC.
813.684.3831

DATE: 2/24/00
SCALE: N.T.S.
DWG. BY: TJH
CHK. BY: RW
DRAWING NO.: S–2002
SHEET 1 OF 6

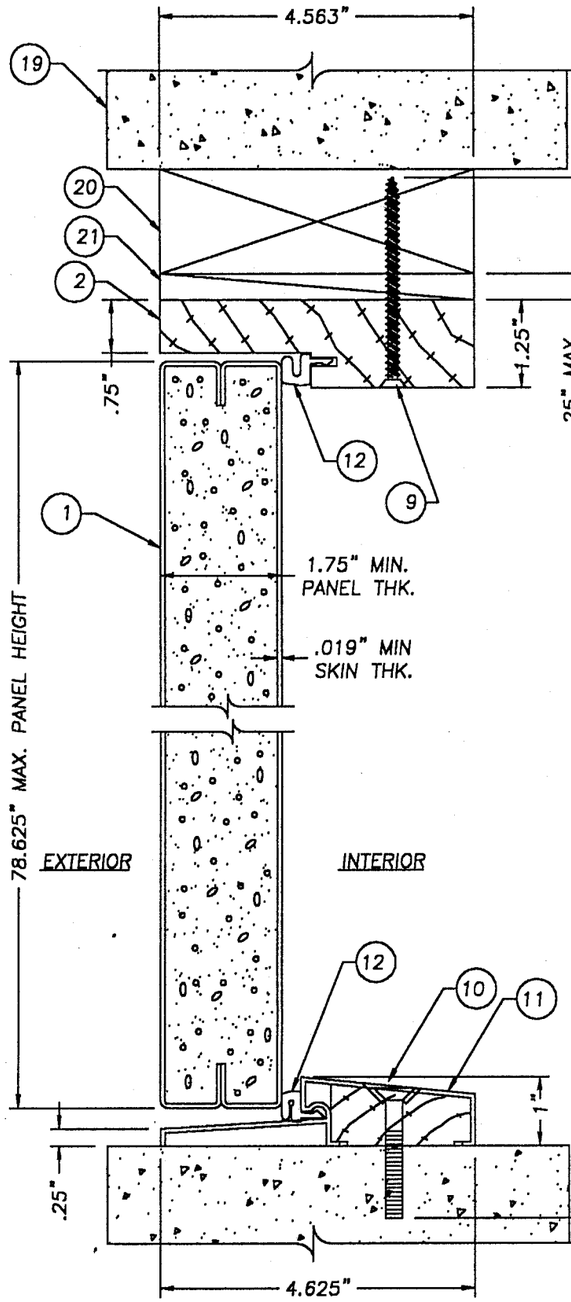

1/2 VERTICAL CROSS-SECTION

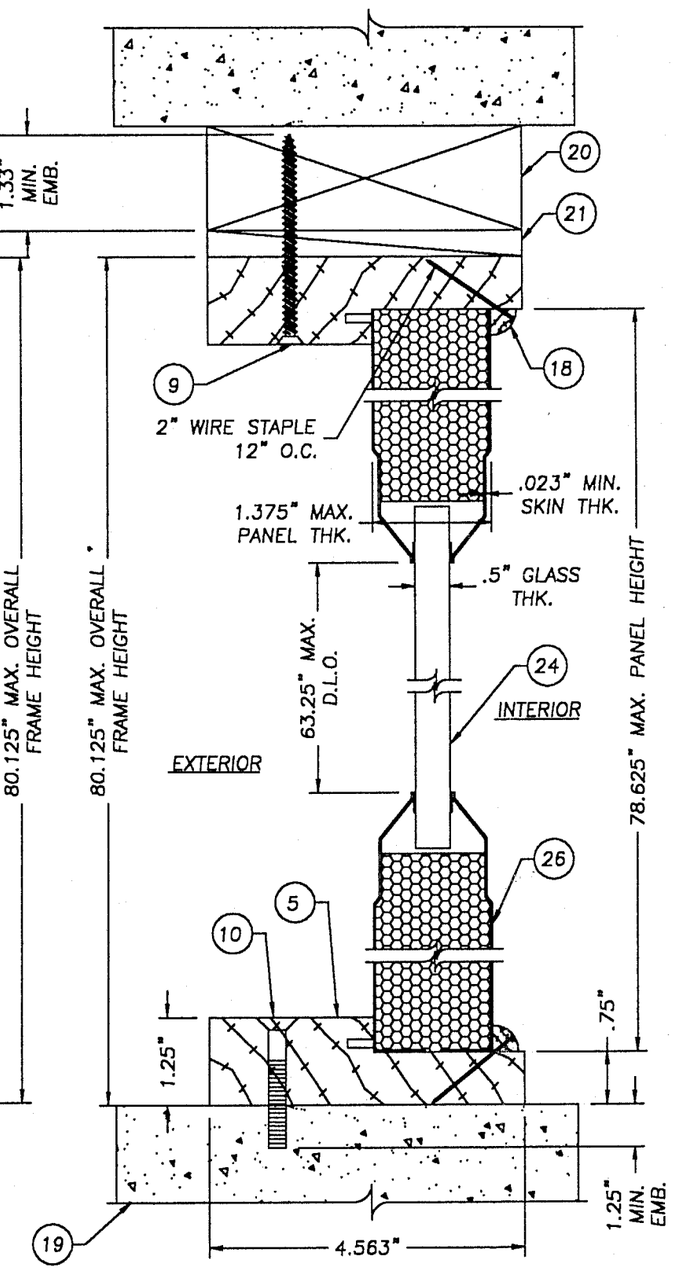

2/2 VERTICAL CROSS-SECTION

NOTES:
1. SPACING FOR ITEM #34 IS AS FOLLOWS FROM LEFT TO RIGHT; 1.34375", 9.5", 7.0", 7.0" & 9.5"

Item	DESCRIPTION	Material
1	6-8 LANDMARK DOOR (25GA. .019" MIN.)	STEEL
2	4 9/16" HEADER	WOOD
3	4 9/16" LATCH JAMB	WOOD
4	4 9/16" HINGE JAMB	WOOD
5	4 9/16" BLANK JAMB	WOOD
6	NON-REMOVABLE PIN HINGE G.P. 4" x 4" HINGE PROPRIETARY .097" THK.	STEEL
7	#10 x 5/8" lg. (Hinge to Frame)	STEEL
8	#10 WOOD SCREW X 2 1/2" LG.	STEEL
9	#10 x 3" LG. WOOD SCREW	STEEL
10	3/16" TAPCON ANCHOR (ELCO)	STEEL
11	BUMP FACE OUTSWING THRESHOLD (.0625")	ALUMINUM
12	COMPRESSION WEATHERSTRIP (QDS-650)	
13	HINGE REINFORCEMENT FOR DOOR .050" x 1 1/8" x 5 5/16" L	STEEL
14	#10 x 1 1/4" LG. TYPE "A" FLATHEAD	STEEL
15	#10 WOOD SCREW X 2" LG.-STRIKE (DEADBOLT)	STEEL
16	KWIKSET 200 DL PASSAGE	
17	KWIKSET 660 DEADBOLT	
18	GLAZING STOP (QUARTER ROUND)	WOOD
19	MASONRY WALL	
20	2x or 1x MATERIAL (BUCK)	WOOD
21	MAX. 1/4" SHIM MATERIAL	
22	T-ASTRAGAL (.063" WALL THK.)	ALUMINUM
23	#12 x 1/2"LG. PANHEAD SHEET METAL SCREW (SHT. 4 NOTES FOR SPACING)	STEEL
24	GLAZING, 1/2" INSULATED TEMPERED GLASS	GLASS
25	NOT USED	
26	1 3/8" STAMPED ITEGRAL SIDELITE (.023")	STEEL
27	MAGNETIC WEATHERSRIP	VINYL
28	LOCK BLOCK	WOOD
29	#10 x 1 3/4" WOOD SCREW	STEEL
30	ONE PIECE BARRIER FREE THRESHOLD	ALUMINUM
31	#8 x 2 1/2" LG. PFH WOOD SCREW	STEEL
32	WHITE BUTYL CAULKING TAPE (DRY GLAZED)	–
33	ADJUSTABLE SWEEP	VINYL
34	#8 x 1/2" LG. TYPE "AB" PANHEAD (SHT. 2 NOTES FOR SPACING)	STEEL

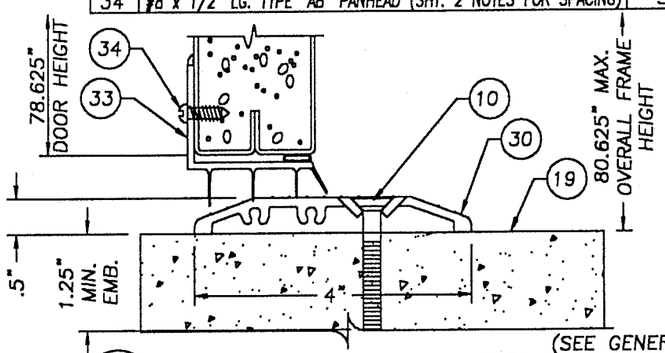

1/2 VERTICAL CROSS-SECTION (SEE GENERAL NOTES NO. 7 SHEET 1)
1-PIECE BARRIER FREE THRESHOLD W/ 1.125" UNDER CUT

PRODUCT RENEWED
as complying with the Florida Buiding Code
Acceptance No. 03-0109.08
Expiration Date 06/15/08
By
Miami Dade Product Control Division

APPROVED AS COMPLYING WITH THE SOUTH FLORIDA BUILDING CODE
DATE June 15, 2000
BY
PRODUCT CONTROL DIVISION
BUILDING CODE COMPLIANCE OFFICE
ACCEPTANCE NO. 99-1220.03

GENERAL PRODUCTS CO. INC.
P.O. BOX 7387
FREDERICKSBURG, VA 22404
PH. (540) 898-5700

PRODUCT: LANDMARK STEEL EDGE INSULATED STEEL DOOR WITH WOOD FRAME

PART OR ASSEMBLY: VERTICAL CROSS SECTIONS & BILL OF MATERIALS

NO.	DATE	REVISIONS	BY
1	5/18/00	GENERAL REVISION	TJH

RW BUILDING CONSULTANTS, INC.
813.684.3831

DATE: 2/24/00
SCALE: 1/2"=1"
DWG. BY: TJH
CHK. BY: RW
DRAWING NO.: S-2002
SHEET 2 OF 6

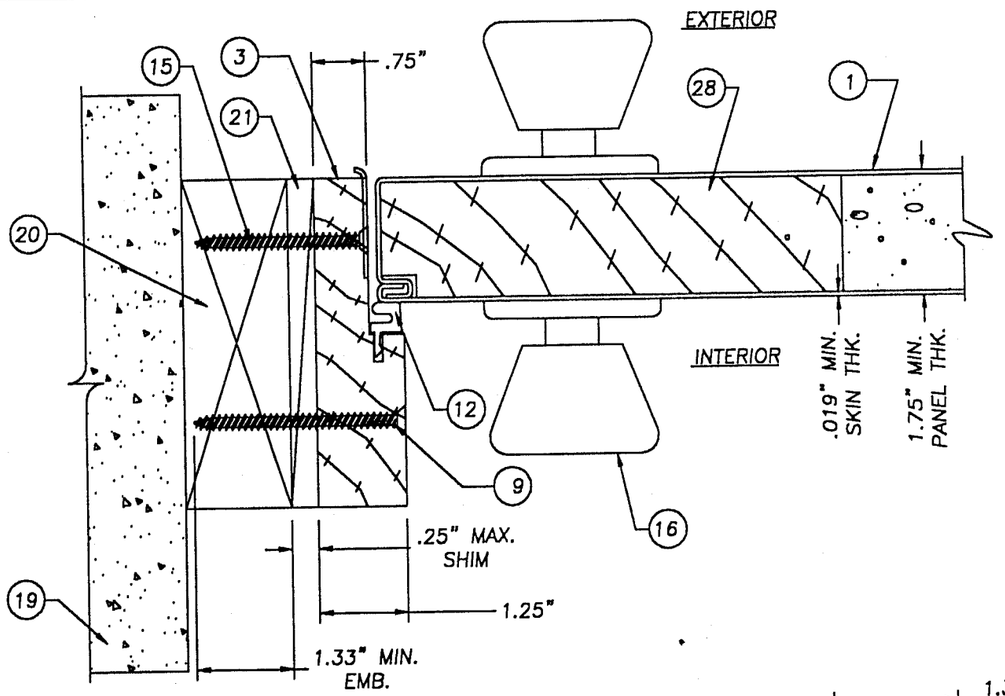

2/3 HORIZONTAL CROSS SECTION
LATCH JAMB TO BUCK, TYP.

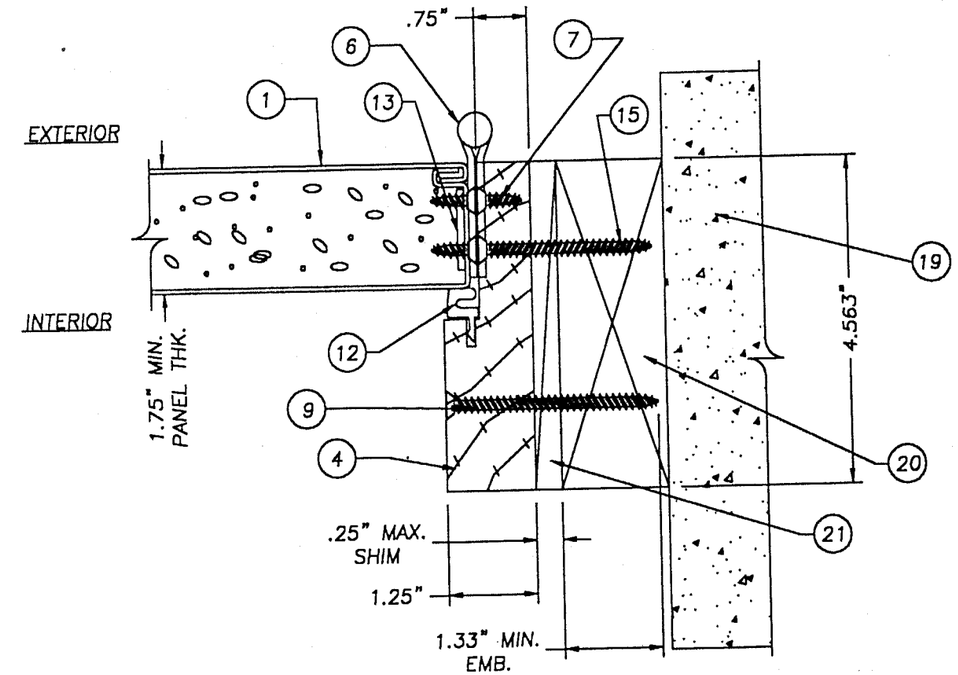

1/3 HORIZONTAL CROSS SECTION
HINGE JAMB TO BUCK, TYP.

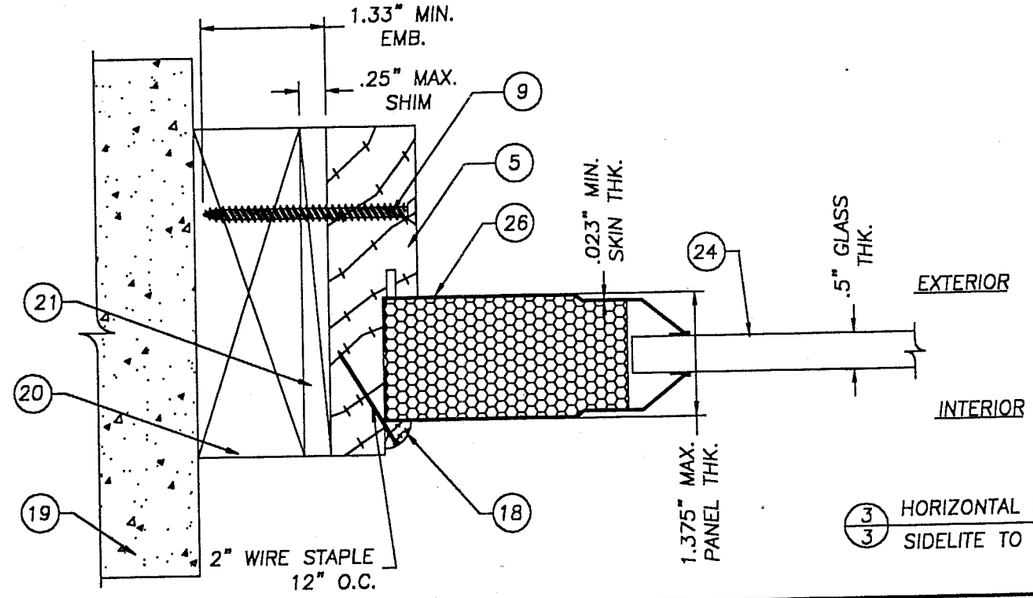

3/3 HORIZONTAL CROSS SECTION
SIDELITE TO BUCK, TYP.

GENERAL PRODUCTS CO. INC.
P.O. BOX 7387
FREDERICKSBURG, VA 22404
PH. (540) 898-5700

PRODUCT:
LANDMARK STEEL EDGE INSULATED STEEL DOOR WITH WOOD FRAME

PART OR ASSEMBLY:
HORIZONTAL CROSS SECTIONS (1/3, 2/3 & 3/3)

NO.	DATE	REVISIONS	BY
1	5/18/00	GENERAL REVISION	TJH

RW BUILDING CONSULTANTS, INCORPORATED 813.684.3831

PRODUCT RENEWED as complying with the Florida Buiding Code
Acceptance No 03-0109.08
Expiration Date 06/15/08
By _____
Miami Dade Product Control Division

APPROVED AS COMPLYING WITH THE SOUTH FLORIDA BUILDING CODE
DATE June 15, 2000
BY Manuel Perez
PRODUCT CONTROL DIVISION
BUILDING CODE COMPLIANCE OFFICE
ACCEPTANCE NO. 99-1220.03

DATE: 2/24/00
SCALE: 1/2"=1"
DWG. BY: TJH
CHK. BY: RW
DRAWING NO.: S-2002
SHEET 3 OF 6

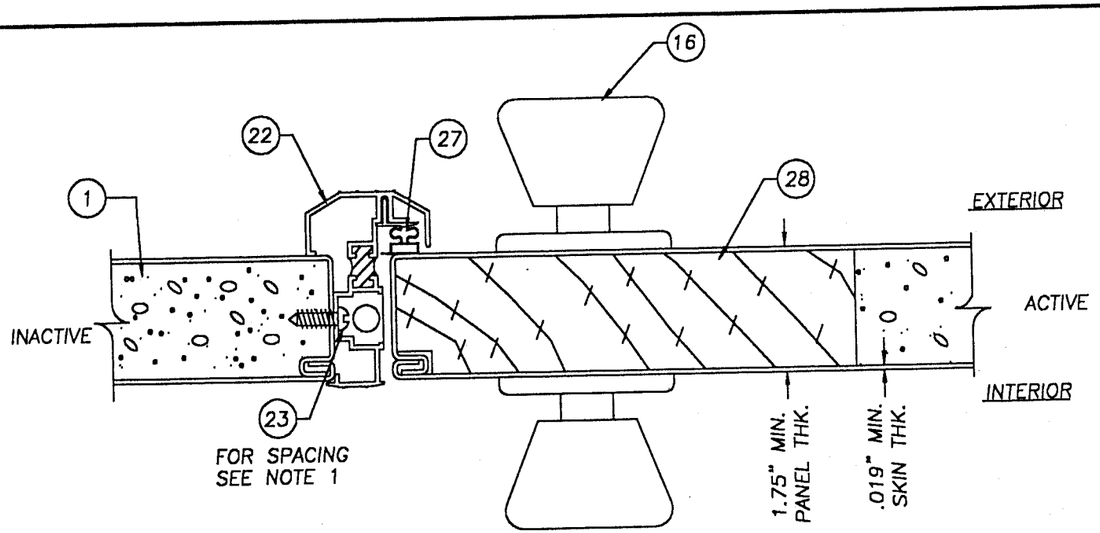

1/4 HORIZONTAL CROSS SECTION
AT ASTRAGAL, TYP.

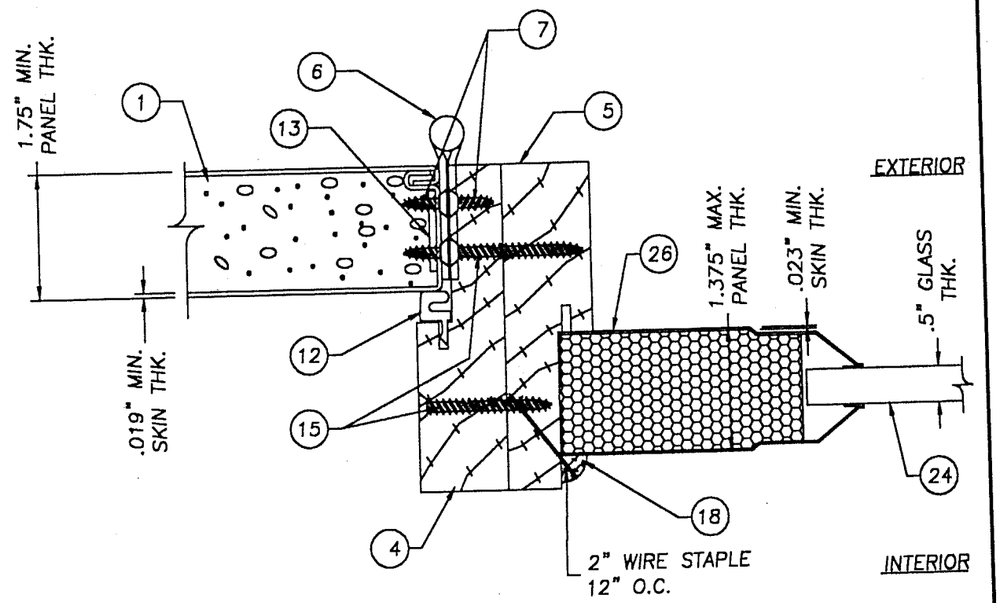

2/4 HORIZONTAL CROSS SECTION
SIDELITE TO HINGE JAMB, TYP.

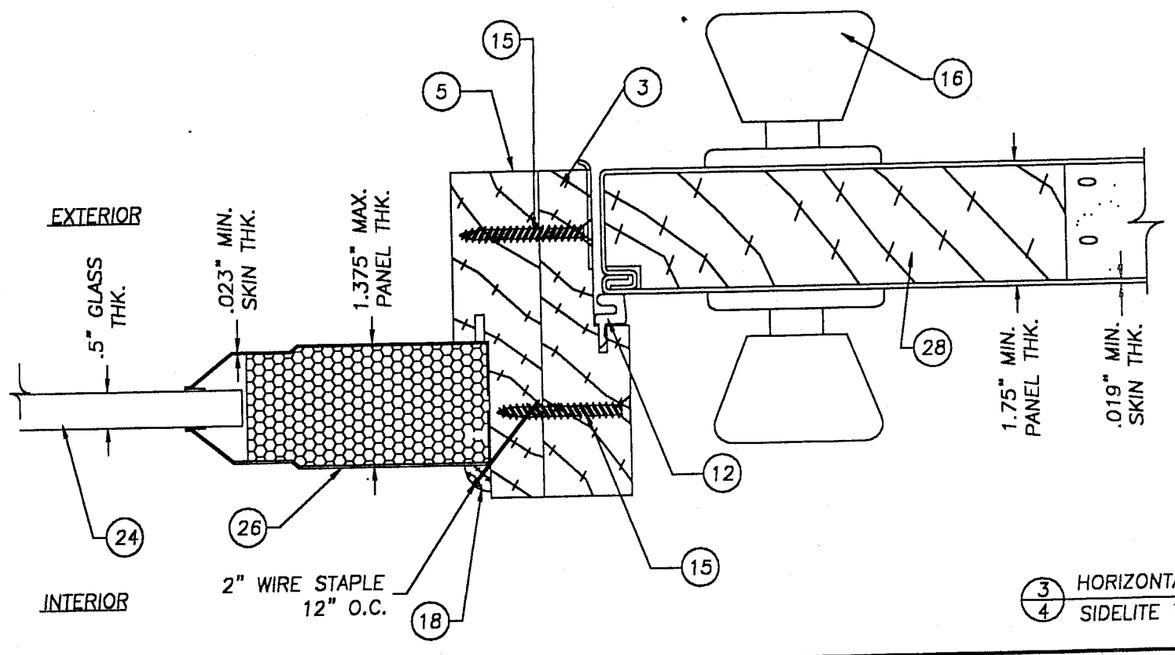

3/4 HORIZONTAL CROSS SECTION
SIDELITE TO LATCH JAMB, TYP.

NOTES:
1. SPACING FOR ITEM #23; FROM TOP DOWN & BOTTOM UP; .75", 2", 3.25", 4.5" & 18.875"

GENERAL PRODUCTS CO. INC.
P.O. BOX 7387
FREDERICKSBURG, VA 22404
PH. (540) 898-5700

PRODUCT:
LANDMARK STEEL EDGE INSULATED STEEL DOOR WITH WOOD FRAME

PART OR ASSEMBLY:
HORIZONTAL CROSS SECTIONS (1/4, 2/4 & 3/4)

NO.	DATE	REVISIONS	BY
1	5/18/00	GENERAL REVISION	TJH

RW BUILDING CONSULTANTS, INCORPORATED 813.684.3831

PRODUCT RENEWED
as complying with the Florida Buiding Code
Acceptance No. 03-0109.08
Expiration Date 06/15/08
By
Miami Dade Product Control Division

APPROVED AS COMPLYING WITH THE SOUTH FLORIDA BUILDING CODE
DATE June 15, 2000
BY
PRODUCT CONTROL DIVISION
BUILDING CODE COMPLIANCE OFFICE
ACCEPTANCE NO. 99-1220.03

DATE:	2/24/00
SCALE:	1/2"=1"
DWG. BY:	TJH
CHK. BY:	RW
DRAWING NO.:	S-2002
SHEET	4 OF 6

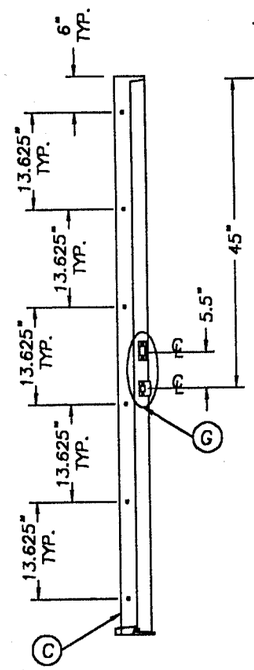

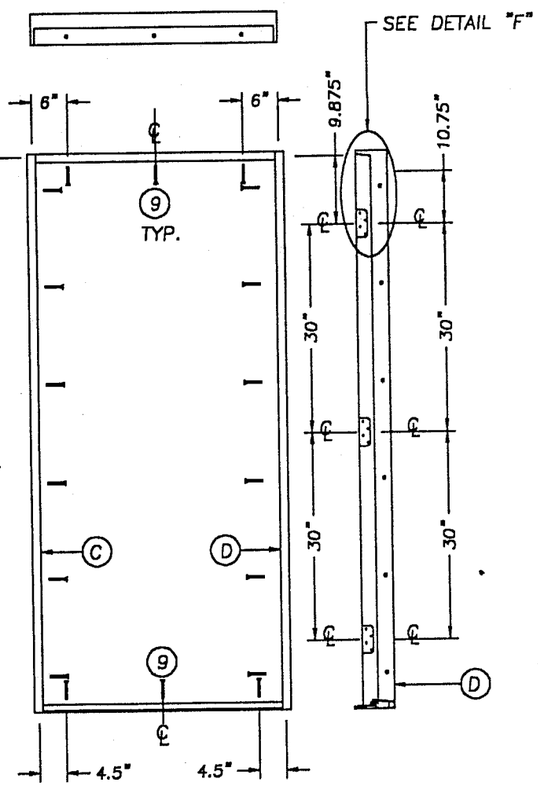

SINGLE DOOR ANCHORING LAYOUT

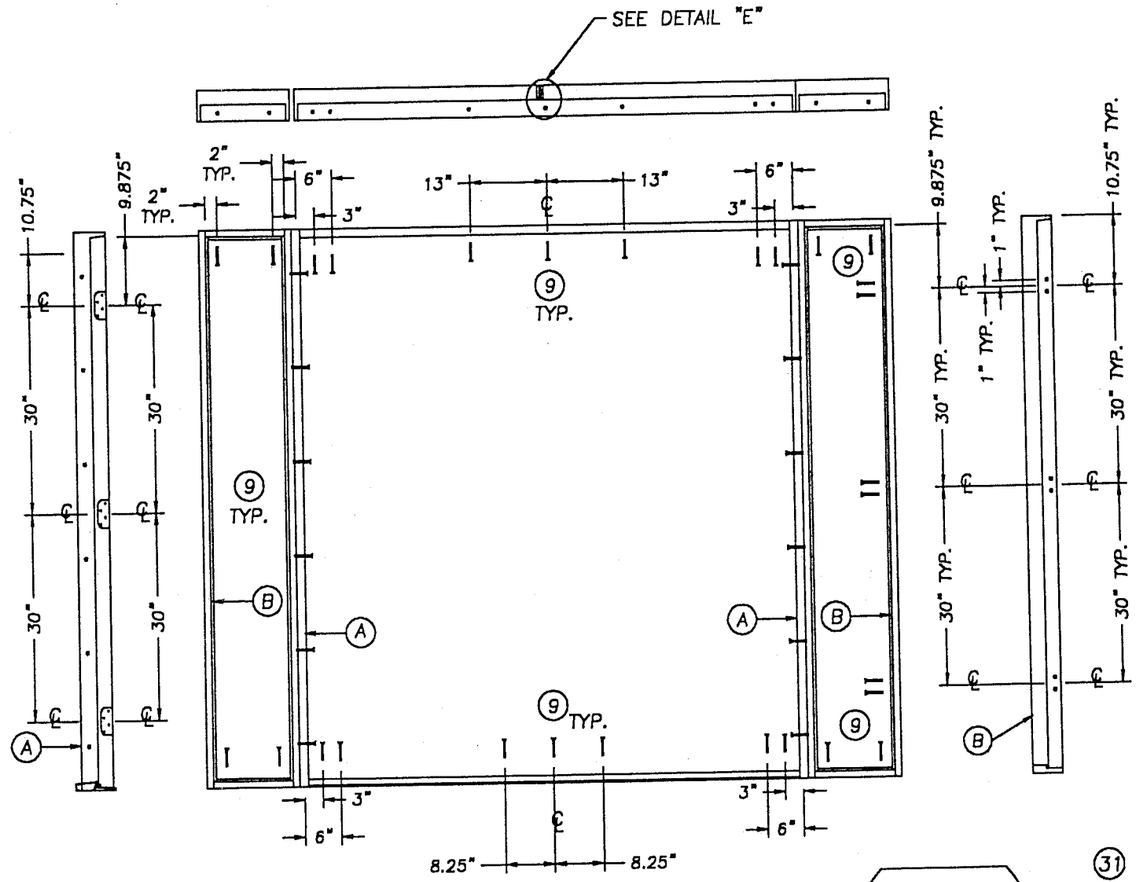

DOUBLE DOOR W/SIDELITES ANCHORING LAYOUT

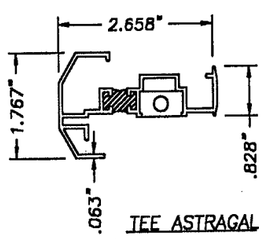

TEE ASTRAGAL

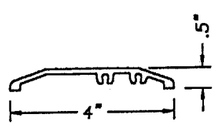

BARRIER FREE THRESHOLD

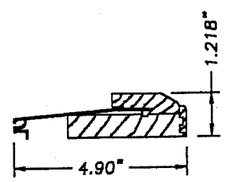

OUTSWING BUMP FACE
WOOD & ALUMINUM THRESHOLD

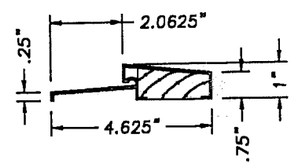

OUTSWING BUMP FACE
ALUMINUM THRESHOLD

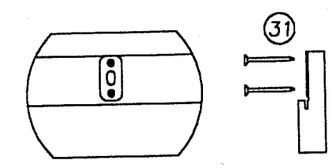

DETAIL "E"
ATTACH ASTRAGAL THROW BOLT STRIKE PLATE TO FRAME AS SHOWN.

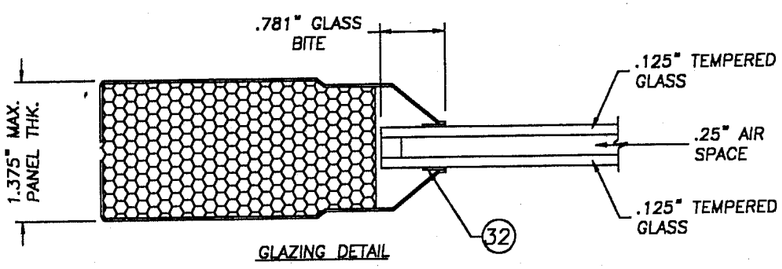

GLAZING DETAIL

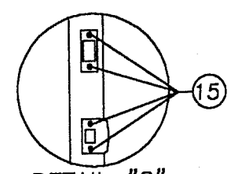

DETAIL "G"
STRIKE & DEADBOLT PLATE DETAILS

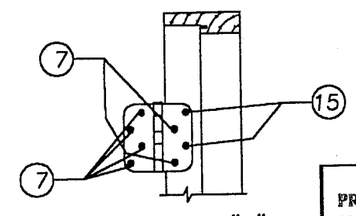

DETAIL "F"
HINGE DETAIL

NOTES:
1. SCREWS LABELED ITEM #9 AT THE THRESHOLD WILL BE REPLACED WITH ITEM #10 (TAPCON ANCHOR) WHEN ANCHORING IN A MASONRY OPENING WITH 1.25" MIN. EMBEDMENT INTO MASONRY.

PRODUCT RENEWED
as complying with the Florida Buiding Code
Acceptance No. 03-0109.08
Expiration Date 06/15/08
By
Miami Dade Product Control Division

APPROVED AS COMPLYING WITH THE SOUTH FLORIDA BUILDING CODE
DATE June 15, 2000
BY
PRODUCT CONTROL DIVISION
BUILDING CODE COMPLIANCE OFFICE
ACCEPTANCE NO. 99-1220.03

GENERAL PRODUCTS CO. INC.
P.O. BOX 7387
FREDERICKSBURG, VA 22404
PH. (540) 898-5700

PRODUCT: LANDMARK STEEL EDGE INSULATED STEEL DOOR WITH WOOD FRAME

PART OR ASSEMBLY: ANCHORING LAYOUTS & GLAZING DETAIL

REVISIONS

NO.	DATE		BY
1	5/18/00	GENERAL REVISION	TJH

RW BUILDING CONSULTANTS, INC.
813.684.3831

DATE: 2/24/00
SCALE: N.T.S.
DWG. BY: TJH
CHK. BY: RW
DRAWING NO.: S-2002
SHEET 5 OF 6

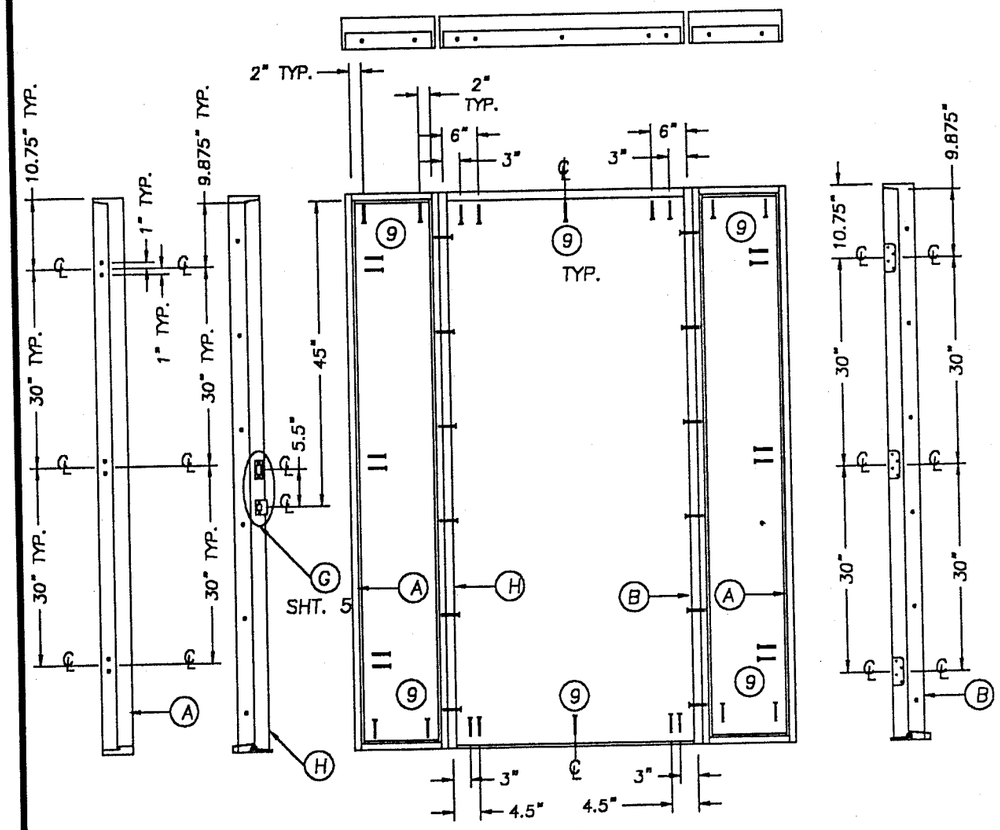

SINGLE DOOR W/SIDELITES ANCHORING LAYOUT

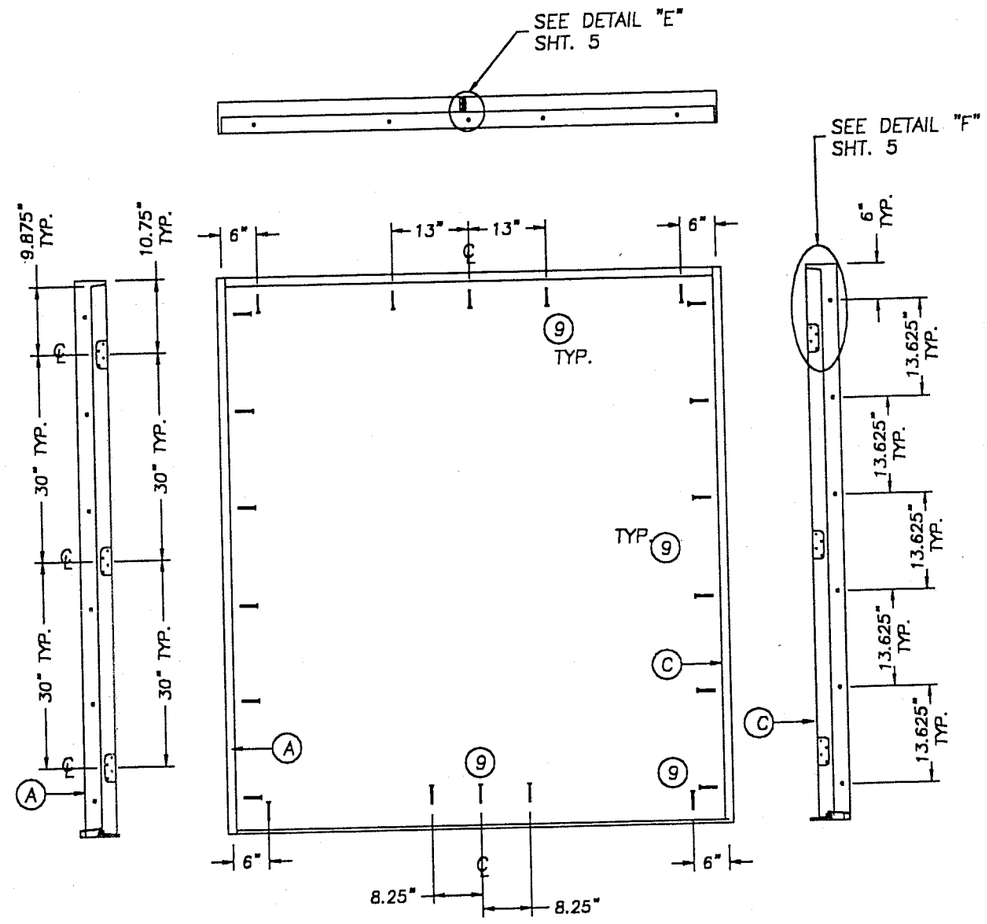

DOUBLE DOOR ANCHORING LAYOUT

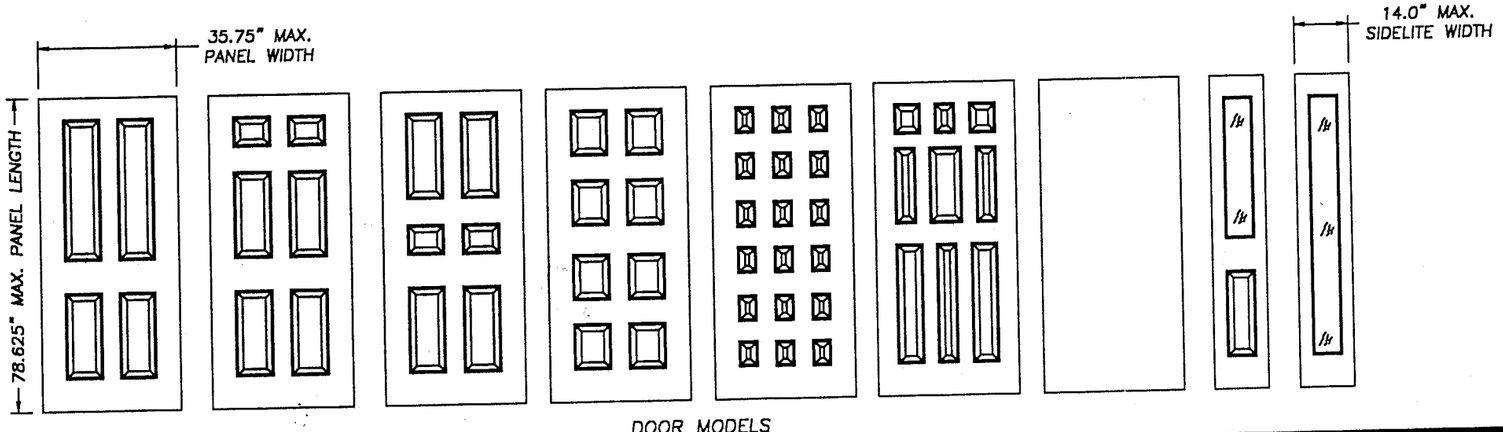

DOOR MODELS

NOTES:

1. SCREWS LABELED ITEM #9 AT THE THRESHOLD WILL BE REPLACED WITH ITEM #10 (TAPCON ANCHOR) WHEN ANCHORING IN A MASONRY OPENING WITH 1.25" MIN. EMBEDMENT INTO MASONRY.

PRODUCT RENEWED
as complying with the Florida Buiding Code
Acceptance No. 03-0109.08
Expiration Date 06/15/08
By
Miami Dade Product Control Division

APPROVED AS COMPLYING WITH THE SOUTH FLORIDA BUILDING CODE
DATE June 15 2000
BY
PRODUCT CONTROL DIVISION
BUILDING CODE COMPLIANCE OFFICE
ACCEPTANCE NO. 99-1220.03

GENERAL PRODUCTS CO. INC.
P.O. BOX 7387
FREDERICKSBURG, VA 22404
PH. (540) 898-5700

PRODUCT: LANDMARK STEEL EDGE INSULATED STEEL DOOR WITH WOOD FRAME

PART OR ASSEMBLY: ANCHORING LAYOUTS & DOOR MODELS

NO.	DATE	REVISIONS	BY
1	5/18/00	GENERAL REVISION	TJH

RW BUILDING CONSULTANTS, INC.
813.684.3831

DATE:	2/24/00
SCALE:	N.T.S.
DWG. BY:	TJH
CHK. BY:	RW
DRAWING NO.:	S-2002
SHEET	6 OF 6