MIAMI-DADE

BUILDING CODE COMPLIANCE OFFICE (BCCO)
PRODUCT CONTROL DIVISION

MIAMI-DADE COUNTY, FLORIDA
METRO-DADE FLAGLER BUILDING
140 WEST FLAGLER STREET, SUITE 1603
MIAMI, FLORIDA 33130-1563
(305) 375-2901 FAX (305) 375-2908

NOTICE OF ACCEPTANCE (NOA)

Sun Metals Systems, Inc.
5140 W. Clifton Street
Tampa, FL 33634

SCOPE:

This NOA is being issued under the applicable rules and regulations governing the use of construction materials. The documentation submitted has been reviewed by Miami-Dade County Product Control Division and accepted by the Board of Rules and Appeals (BORA) to be used in Miami Dade County and other areas where allowed by the Authority Having Jurisdiction (AHJ).

This NOA shall not be valid after the expiration date stated below. The Miami-Dade County Product Control Division (In Miami Dade County) and/or the AHJ (in areas other than Miami Dade County) reserve the right to have this product or material tested for quality assurance purposes. If this product or material fails to perform in the accepted manner, the manufacturer will incur the expense of such testing and the AHJ may immediately revoke, modify, or suspend the use of such product or material within their jurisdiction. BORA reserves the right to revoke this acceptance, if it is determined by Miami-Dade County Product Control Division that this product or material fails to meet the requirements of the applicable building code.

This product is approved as described herein, and has been designed to comply with the High Velocity Hurricane Zone of the Florida Building Code.

DESCRIPTION: Series "450" Aluminum Window Wall-SMI

APPROVAL DOCUMENT: Drawing No. **SUN-450WW-SMI,** titled "Window Wall", sheets 1 through 6 of 6, prepared by manufacturer, dated 10/14/02 with revision on 4/1/03, bearing the Miami-Dade County Product Control Approval stamp with the Notice of Acceptance number and approval date by the Miami-Dade County Product Control Division.

MISSILE IMPACT RATING: Small Missile Impact

LABELING: Each unit shall bear a permanent label with the manufacturer's name or logo, city, state and following statement: "Miami-Dade County Product Control Approved", unless otherwise noted herein.

RENEWAL of this NOA shall be considered after a renewal application has been filed and there has been no change in the applicable building code negatively affecting the performance of this product.

TERMINATION of this NOA will occur after the expiration date or if there has been a revision or change in the materials, use, and/or manufacture of the product or process. Misuse of this NOA as an endorsement of any product, for sales, advertising or any other purposes shall automatically terminate this NOA. Failure to comply with any section of this NOA shall be cause for termination and removal of NOA.

ADVERTISEMENT: The NOA number preceded by the words Miami-Dade County, Florida, and followed by the expiration date may be displayed in advertising literature. If any portion of the NOA is displayed, then it shall be done in its entirety.

INSPECTION: A copy of this entire NOA shall be provided to the user by the manufacturer or its distributors and shall be available for inspection at the job site at the request of the Building Official.
This NOA consists of this page 1 as well as approval document mentioned above.
The submitted documentation was reviewed by **Theodore Berman, P.E.**

5/5/03

PRODUCT CONTROL ACCEPTED

Sun Metals Systems, Inc.

NOTICE OF ACCEPTANCE: EVIDENCE SUBMITTED

(For File ONLY. Not part of NOA)

A. DRAWINGS

1. Manufacturer's die drawings and sections.
2. Drawing No. **SUN-450WW-SMI,** titled "Window Wall", sheets 1 through 6 of 6, prepared by manufacturer, dated 10/14/02 with revision on 4/1/03.

B. TESTS

1. Test reports on 1) Air Infiltration Test, per FBC, TAS 202-94
   2) Uniform Static Air Pressure Test, Loading per FBC,TAS 202-94
   3) Water Resistance Test, per FBC, TAS 202-94
   4) Large Missile Impact Test per FBC, TAS 201-94
   5) Cyclic Wind Pressure Loading per FBC, TAS 203-94
   6) Small Missile Impact Test per FBC, TAS 201-94

   along with marked-up drawings and installation diagram of an aluminum window wall, prepared by Certified Testing Laboratories, Test Report No. CTLA-979W dated 12/12/02, signed and sealed by Ramesh Patel, P.E.

C. CALCULATIONS

1. Anchor Calculations and structural analysis, prepared by R.W. Building Consultants, Inc., dated 4/16/03, signed and sealed by Lyndon Schimdt, P.E.

D. MATERIAL CERTIFICATIONS

1. Notice of Acceptance No. **01-0205.02** issued to Solutia, Inc. for "Saflex/Keepsafe" dated 5/17/01, expiring on 5/21/06.

E. STATEMENTS

1. Statement letter of conformance, dated 1/6/03, signed and sealed by Lyndon Schimdt, P.E.
2. Statement letter of no financial interest, dated 1/6/03, signed and sealed by Lyndon Schimdt, P.E.
3. Statement letter of no financial interest, dated 12/19/02, signed by Jay Hatton.
4. Letter from R.W Building Consultants, Inc., dated 4/9/03, responding to information requested on.

F. OTHER

1. Letter from the consultant stating that the product is in compliance with the Florida Building Code (FBC).

Theodore Berman, P.E.
Deputy Director, Product Control Division
NOA No 03-0109.11
Expiration Date: May 29, 2008
Approval Date: May 29, 2003

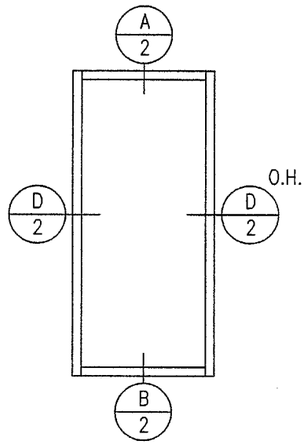

SINGLE LIGHT
PUNCH WINDOW

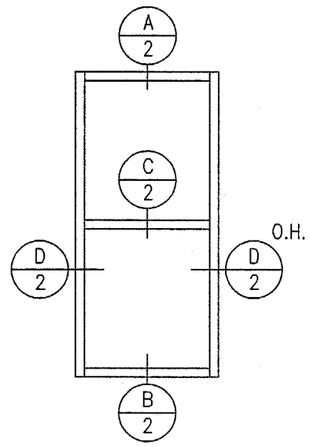

DOUBLE LIGHT
PUNCH WINDOW

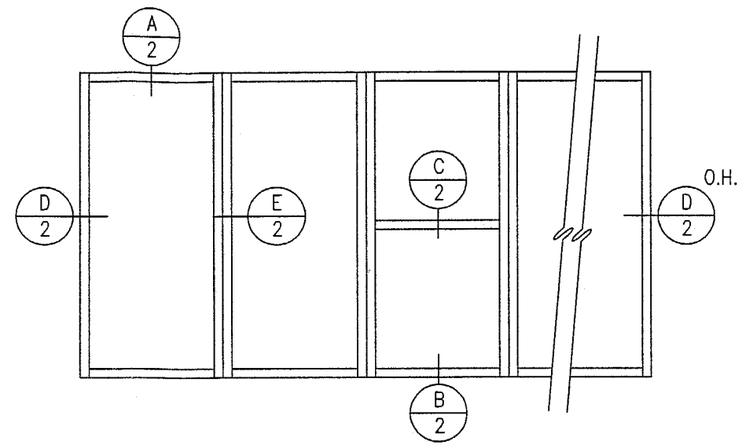

CONTINUOUS WINDOW WALL
SINGLE AND/OR DOUBLE LITE

OPTIONAL ELEVATIONS

GLAZING OPTIONS

SMALL MISSILE IMPACT RESISTANT – 9/16" LAMINATED
(INSIDE LITE, 1/4" HS / 2 EA. 0.030 SOLUTIA SAFLEX IIIG PVB / OUTSIDE LITE, 1/4" HS)

FOR INSTALLATIONS ABOVE 30 FEET ABOVE GRADE. SHUTTERS ARE NOT REQUIRED

DADE COUNTY APPROVED IMPACT RESISTANT SHUTTERS REQUIRED FOR INSTALLATIONS BELOW 30 FEET ABOVE GRADE

DESIGN PRESSURES:

+115 PSF
−115 PSF

TABLE OF CONTENTS

SHEET 1	NOTES AND GENERAL ELEVATIONS
SHEET 2	HORIZONTAL AND VERTICAL CROSS SECTIONS
SHEET 3	BILL OF MATERIALS AND COMPONENTS
SHEET 4	3/8" WOOD SCREWS ANCHORING ELEVATIONS
SHEET 5	5/16" SHEET METAL SCREWS ANCHORING ELEVATIONS
SHEET 6	5/16" TAPCONS ANCHORING ELEVATIONS

NOTES:

1. THIS STRUCTURE IS DESIGNED AS PER THE 2001 FLORIDA BUILDING CODE AND PER ASCE 7–98 CORRESPONDING WIND LOADS.
2. WOOD BUCKS BY OTHERS MUST BE ANCHORED PROPERLY TO TRANSFER LOADS TO THE STRUCTURE.
3. ANCHORS SHALL BE AS LISTED, SPACED AS SHOWN ON DETAILS. ANCHOR EMBEDMENT TO BASE MATERIAL SHALL BE BEYOND WALL DRESSING OR STUCCO.
4. ALL STEEL IN CONTACT WITH ALUMINUM TO BE PAINTED OR PLATED.

SUN METALS SYSTEMS, INC.
5140 W. CLIFTON STREET (813) 886–0666
TAMPA, FLORIDA 33634 (813) 881–0812 (Fax)

Scale: N.T.S.
Date: 10/14/02
Drawn: ECV
Checked: RW

Rev. #	Rev. By	Revision Notes	Rev. Date
1	R.L.	ADDED ANCHOR SHEETS	4/1/03

PRODUCT: WINDOW WALL

PART OR ASSEMBLY: ELEVATIONS & GENERAL NOTES

Approved as complying with the Florida Building Code
Date 05/29/03
NOA# 03-0109.11
Miami Dade Product Control Division
By Everline Roman

DRAWING NO.:
SUN–450WW–SMI

SHEET#: 1 OF 6

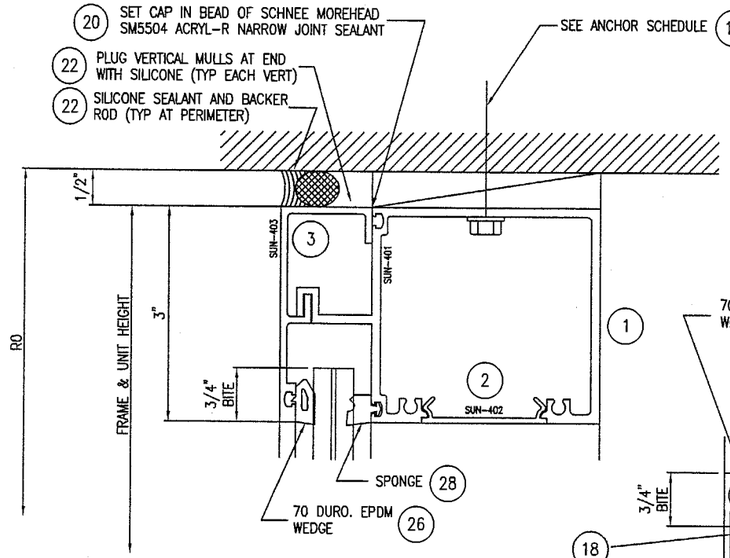

A HEAD

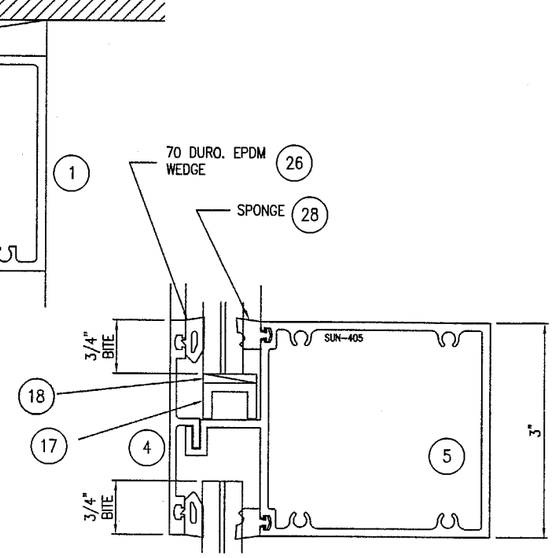

C INTERMEDIATE HORIZONTAL

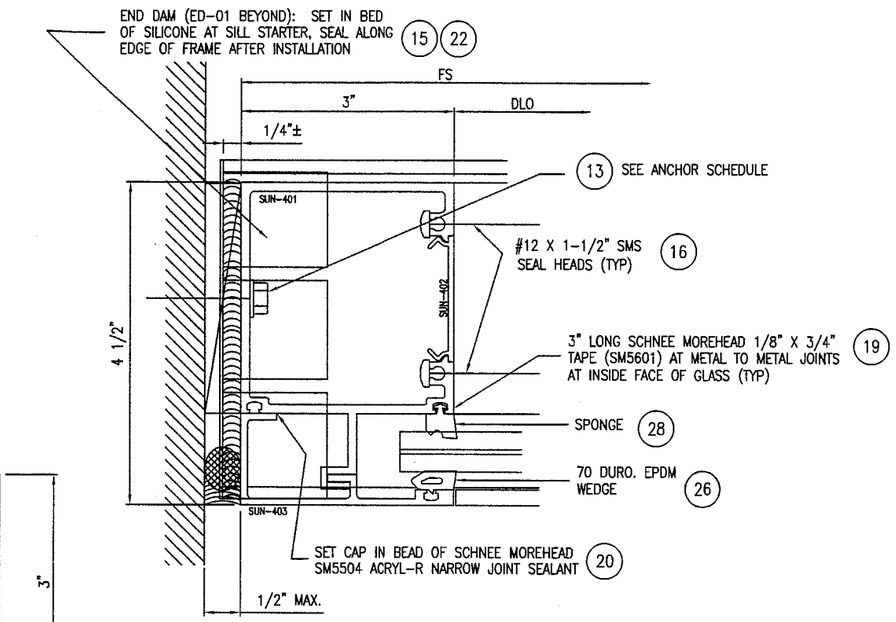

D JAMB

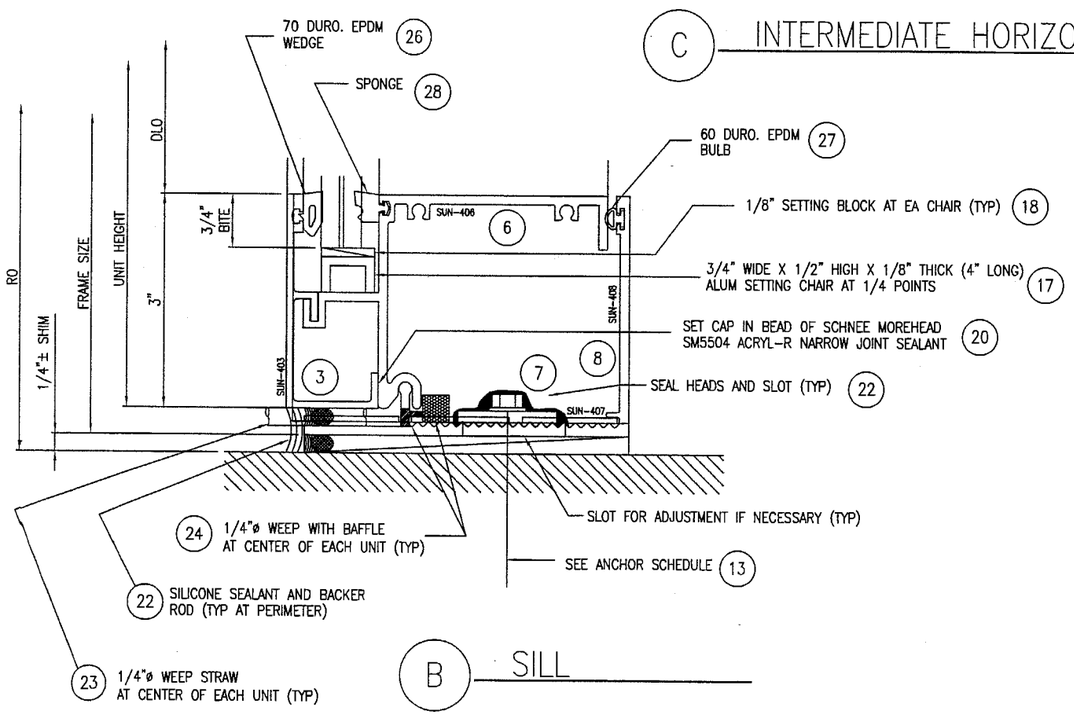

B SILL

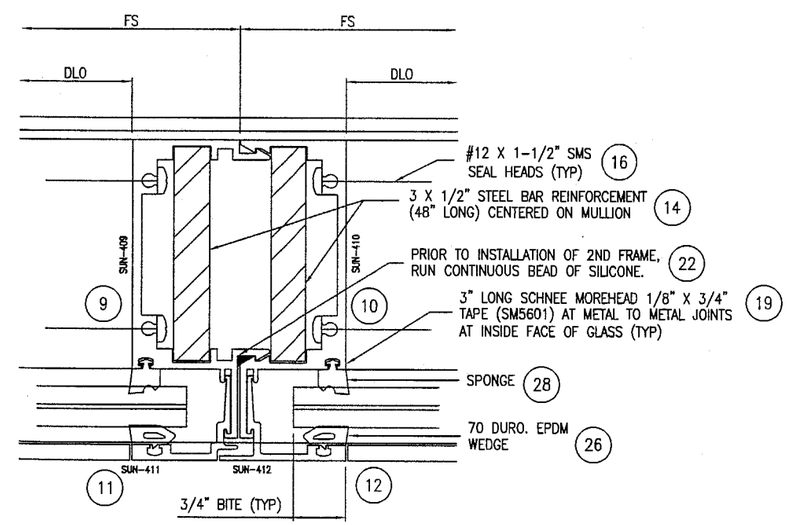

E HEAD

SUN METALS SYSTEMS, INC.
5140 W. CLIFTON STREET (813) 886-0666
TAMPA, FLORIDA 33634 (813) 881-0812 (Fax)

Scale: N.T.S.			
Date: 10/14/02			
Drawn: EGV			
Checked: RW	1	R.L.	ADDED ANCHOR SHEETS 4/1/03
	Rev. #	Rev. By	Revision Notes Rev. Date

PRODUCT: WINDOW WALL

PART OR ASSEMBLY: HORIZONTAL & VERTICAL CROSS SECTIONS

Approved as complying with the Florida Building Code
Date 05/29/03
NOA# 03-0109.11
Miami Dade Product Control Division
By: Theodore Norman

DRAWING NO.: SUN-450WW-SMI

SHEET#: 2 OF 6

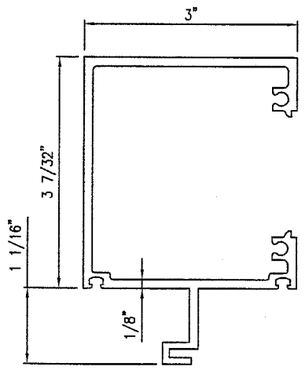

1 JAMB/HEAD

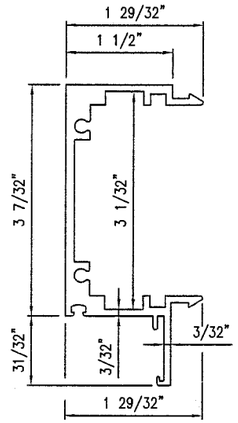

9 MALE MULLION

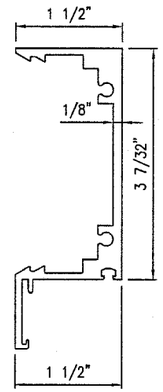

10 FEMALE MULLION

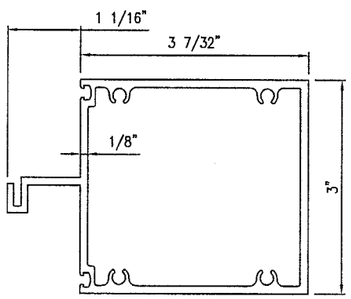

5 HORIZONTAL

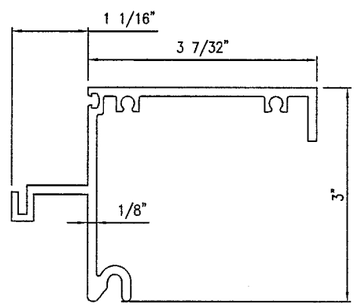

6 SILL

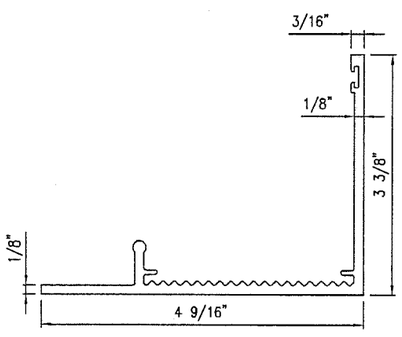

8 STARTER SILL

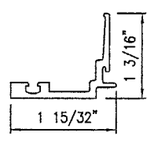

11 SPLIT MULL CAP

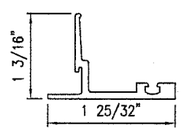

12 SPLIT MULL CAP

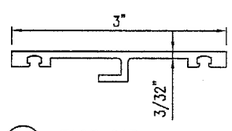

4 FACE CAP

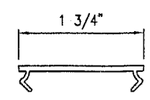

2 FILLER

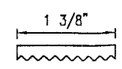

7 WASHER

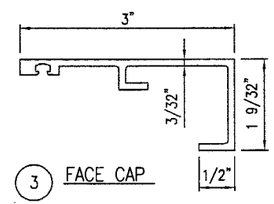

3 FACE CAP

GASKETS

Bill of Materials

Item#	Part#	Description	Material
1	SUN-401	FRAME JAMB/HEAD	6063-T6
2	SUN-402	SNAP FILLER	6063-T6
3	SUN-403	FACE CAP	6063-T6
4	SUN-404	FACE CAP	6063-T6
5	SUN-405	HORIZONTAL	6063-T6
6	SUN-406	SILL	6063-T6
7	SUN-407	CERRATED WASHER	6063-T6
8	SUN-408	STARTER SILL	6063-T6
9	SUN-409	MALE SPLIT MULLION	6063-T6
10	SUN-410	FEMALE SPLIT MULLION	6063-T6
11	SUN-411	SPLIT MULLION FACE CAP	6063-T6
12	SUN-412	SPLIT MULLION FACE CAP	6063-T6
13	–	ANCHOR PER SCHEDULE (SHT 2 OF 4)	–
14	–	REINFORCEMENT: 3 X 1/2" STEEL BAR (48" LONG)	A36
15	–	0.040 ALUM BREAKMETAL END DAMN	5005-H14
16	–	FRAME ASSY SCREW: #12 X 1-1/2" SMS	–
17	–	SETTING CHAIR (4" LONG): 3/4"x 1/2"x 1/8" ALUM CH	6063-T5
18	–	1/8" EPDM SETTING BLOCK (4" LONG)	–
19	–	TAPE SEALANT (SCHNEE MOREHEAD SM5601)	–
20	–	SEAM SEALER (SCHNEE MOREHEAD SM5504)	–
21	–	NOT USED	–
22	–	PERIMETER SILICONE SEALANT (TREMCO PROGLAZE II)	SILICONE
23	–	WEEP STRAW	–
24	–	WEEP BAFFLE	–
25	–	NOT USED	–
26	–	EXTRUDED 70 DURO. EPDM WEDGE GASKET (TREMCO)	EPDM
27	–	EXTRUDED 60 DURO. EPDM BULB GASKET (TREMCO)	EPDM
28	–	NEOPRENE SPONGE (TREMCO)	NEOPRENE
29	–	L2"x 1"x 1/8" ALUM SHEAR BLOCK (2-7/8" LONG)	6063-T6

SUN METALS SYSTEMS, INC.
5140 W. CLIFTON STREET (813) 886-0666
TAMPA, FLORIDA 33634 (813) 881-0812 (Fax)

Scale: N.T.S.
Date: 10/14/02
Drawn: ECV
Checked: RW

PRODUCT: WINDOW WALL

PART OR ASSEMBLY: BILL OF MATERIALS & COMPONENTS

Rev. #	Rev. By	Revision Notes	Rev. Date
1	R.L.	ADDED ANCHOR SHEETS	4/1/03

Approved as complying with the Florida Building Code
Date 05/29/03
NOA# 03-0109.11
Miami Dade Product Control Division
By [signature]

DRAWING NO.: SUN-450WW-SMI

SHEET#: 3 OF 6

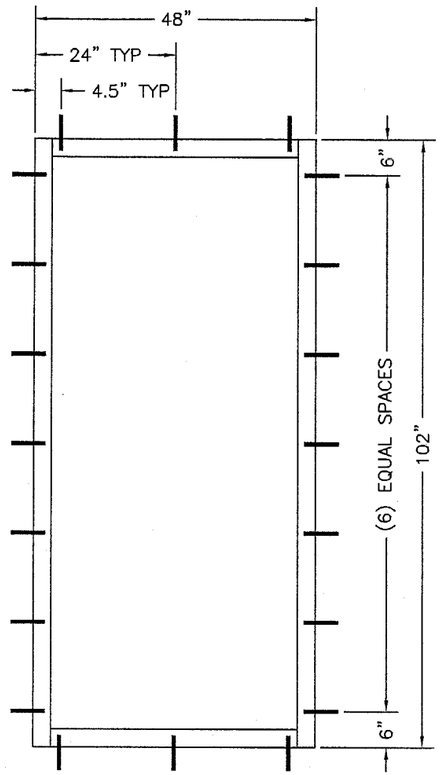

SINGLE LIGHT
PUNCH WINDOW

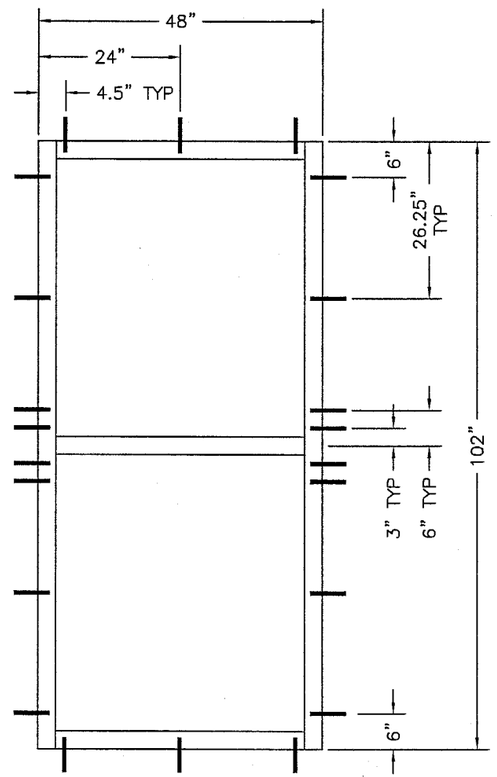

DOUBLE LIGHT
PUNCH WINDOW

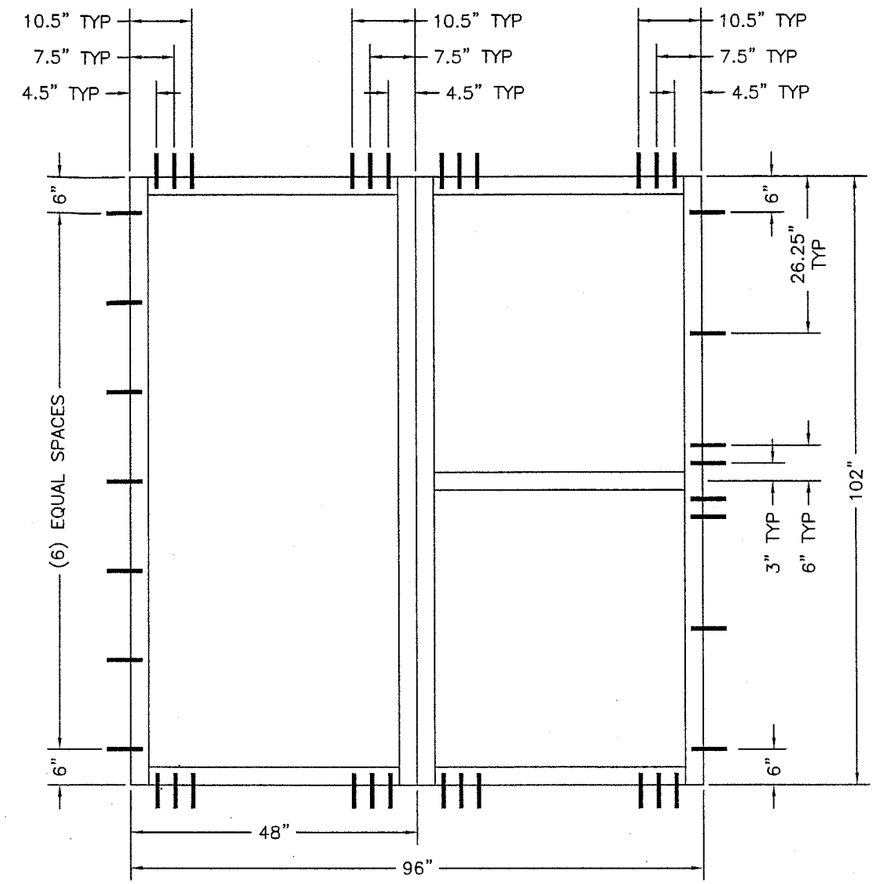

CONTINUOUS WINDOW WALL
SINGLE AND/OR DOUBLE LITE

ANCHOR SCHEDULE

SUBSTRATE	ANCHOR
WOOD 2X	3/8" ø WOOD SCREW WITH 1 1/2" EMBEDMENT

SUN METALS SYSTEMS, INC.
5140 W. CLIFTON STREET (813) 886-0666
TAMPA, FLORIDA 33634 (813) 881-0812 (Fax)

PRODUCT
WINDOW WALL

PART OR ASSEMBLY
3/8" WOOD SCREW
ANCHOR ELEVATIONS

Scale: N.T.S.
Date: 10/14/02
Drawn: ECV
Checked: RW

Rev. #	Rev. By	Revision Notes	Rev. Date
1	R.L.	ADDED ANCHOR SHEETS	4/1/03

Approved as complying with the Florida Building Code
Date 05/29/03
NOA# 03-0109.11
Miami Dade Product Control Division
By Theodore Berman

DRAWING NO.:
SUN-450WW-SMI

SHEET#: 4 OF 6

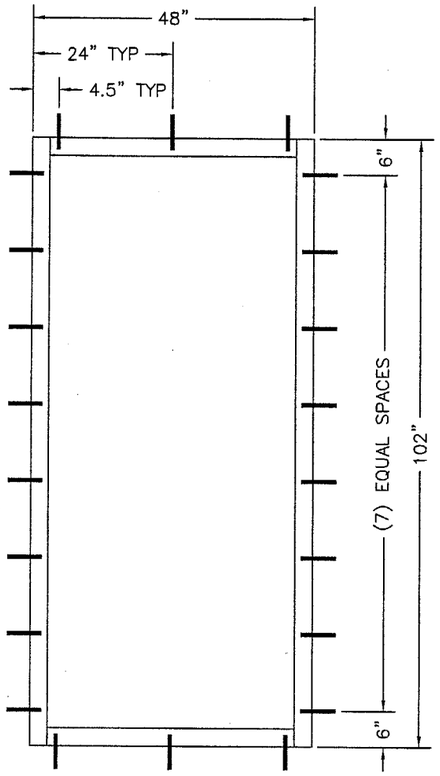

SINGLE LIGHT
PUNCH WINDOW

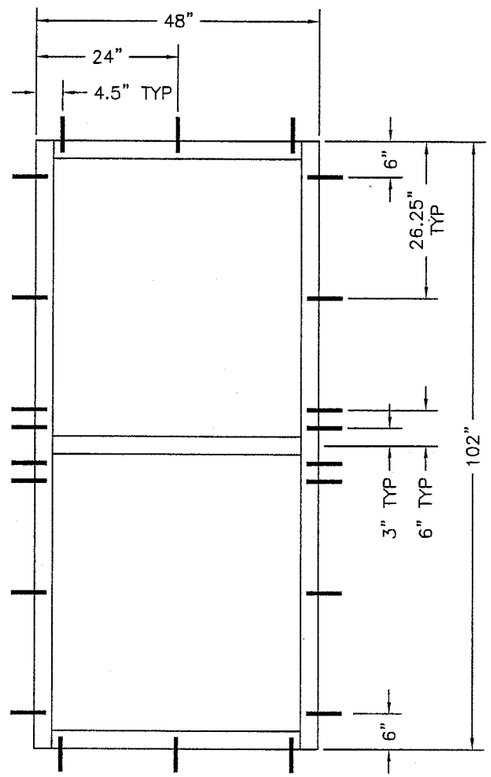

DOUBLE LIGHT
PUNCH WINDOW

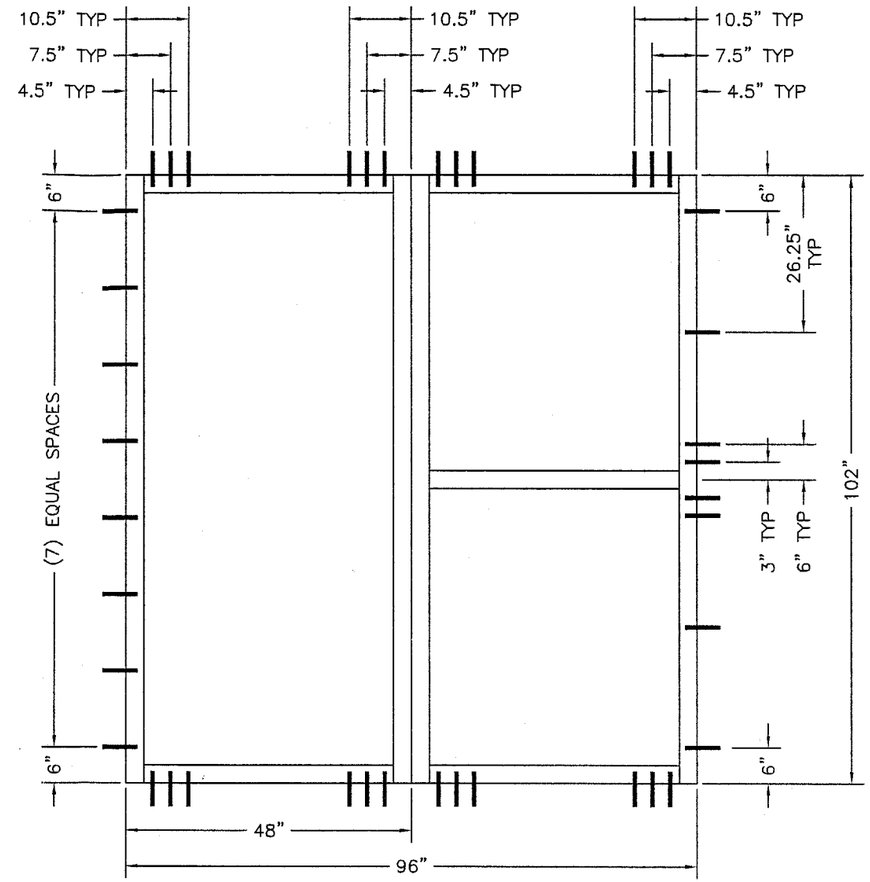

CONTINUOUS WINDOW WALL
SINGLE AND/OR DOUBLE LITE

ANCHOR SCHEDULE

SUBSTRATE	ANCHOR
STEEL (16 GA MIN)	5/16" ø SMS

SUN METALS SYSTEMS, INC.
5140 W. CLIFTON STREET (813) 886-0666
TAMPA, FLORIDA 33634 (813) 881-0812 (Fax)

PRODUCT: WINDOW WALL

PART OR ASSEMBLY: 5/16" SMS ANCHOR ELEVATIONS

Scale: N.T.S.
Date: 10/14/02
Drawn: ECV
Checked: RW

Rev. #	Rev. By	Revision Notes	Rev. Date
1	R.L.	ADDED ANCHOR SHEETS	4/1/03

Approved as complying with the Florida Building Code
Date 05/29/03
NOA# 03-0109.11
Miami Dade Product Control Division
By Theodore Berman

DRAWING NO.:
SUN-450WW-SMI

SHEET#: 5 OF 6

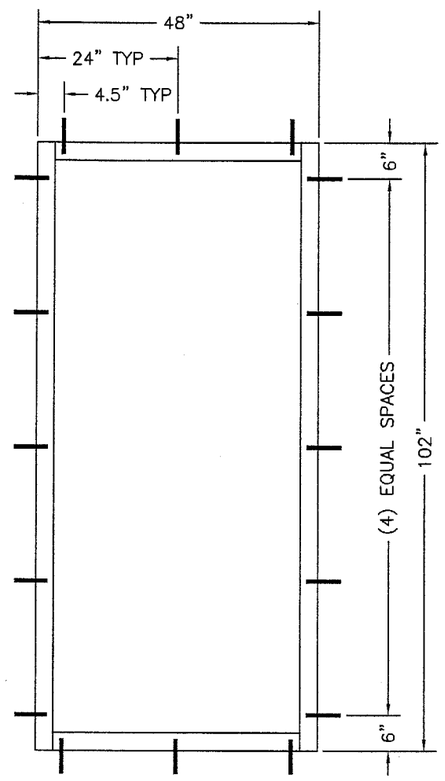

SINGLE LIGHT
PUNCH WINDOW

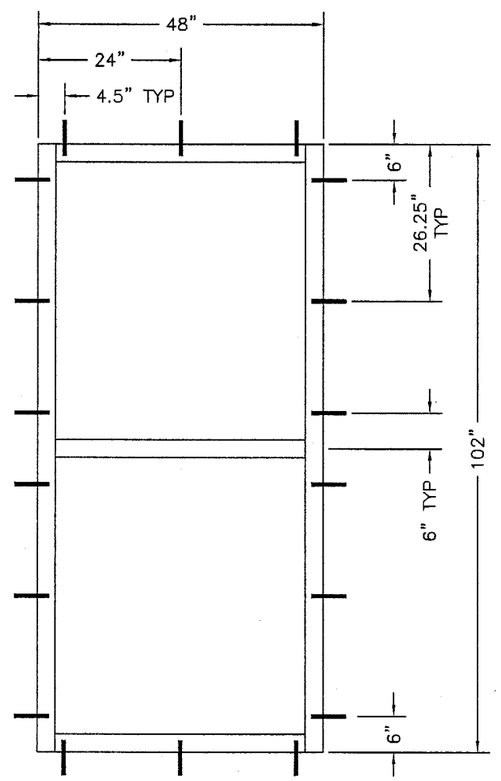

DOUBLE LIGHT
PUNCH WINDOW

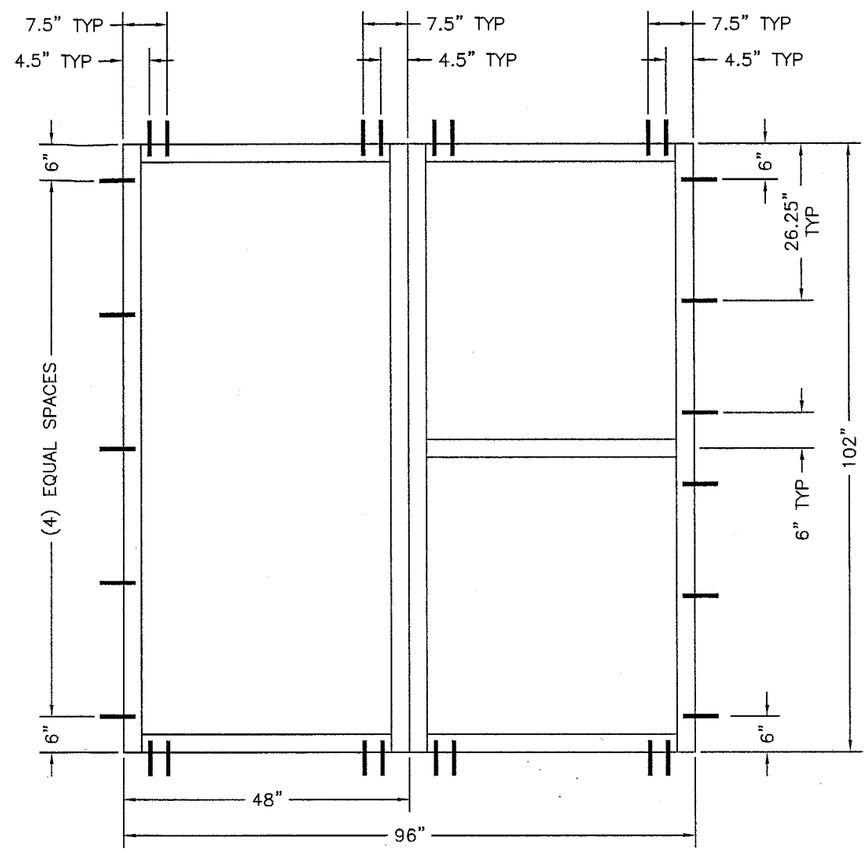

CONTINUOUS WINDOW WALL
SINGLE AND/OR DOUBLE LITE

ANCHOR SCHEDULE

SUBSTRATE	ANCHOR
CONCRETE	5/16" ø TAPCON WITH 1 3/4" EMBEDMENT INTO CONCRETE
WOOD 1X	5/16" ø TAPCON WITH 1 3/4" EMBEDMENT INTO CONCRETE

SUN METALS SYSTEMS, INC.
5140 W. CLIFTON STREET (813) 886-0666
TAMPA, FLORIDA 33634 (813) 881-0812 (Fax)

Scale: N.T.S.
Date: 10/14/02
Drawn: ECV
Checked: RW

PRODUCT
WINDOW WALL

PART OR ASSEMBLY
5/16" TAPCON ANCHOR ELEVATIONS

Rev. #	Rev. By	Revision Notes	Rev. Date
1	R.L.	ADDED ANCHOR SHEETS	4/1/03

Approved as complying with the Florida Building Code
Date 05/29/03
NOA# 03-0109.11
Miami Dade Product Control Division
By Charlene Lemon

DRAWING NO.:
SUN-450WW-SMI

SHEET#: 6 OF 6