MIAMI-DADE

BUILDING CODE COMPLIANCE OFFICE (BCCO)
PRODUCT CONTROL DIVISION

MIAMI-DADE COUNTY, FLORIDA
METRO-DADE FLAGLER BUILDING
140 WEST FLAGLER STREET, SUITE 1603
MIAMI, FLORIDA 33130-1563
(305) 375-2901 FAX (305) 375-2908

NOTICE OF ACCEPTANCE (NOA)

Clopay Building Products Co.
8585 Duke Boulevard
Mason, OH 45040

SCOPE: This NOA is being issued under the applicable rules and regulations governing the use of construction materials. The documentation submitted has been reviewed by Miami-Dade County Product Control Division and accepted by the Board of Rules and Appeals (BORA) to be used in Miami Dade County and other areas where allowed by the Authority Having Jurisdiction (AHJ).

This NOA shall not be valid after the expiration date stated below. The Miami-Dade County Product Control Division (In Miami Dade County) and/or the AHJ (in areas other than Miami Dade County) reserve the right to have this product or material tested for quality assurance purposes. If this product or material fails to perform in the accepted manner, the manufacturer will incur the expense of such testing and the AHJ may immediately revoke, modify, or suspend the use of such product or material within their jurisdiction. BORA reserves the right to revoke this acceptance, if it is determined by Miami-Dade County Product Control Division that this product or material fails to meet the requirements of the applicable building code.

This product is approved as described herein, and has been designed to comply with the High Velocity Hurricane Zone of the Florida Building Code.

DESCRIPTION: Sectional Garage Door 9'- 0" Wide.

APPROVAL DOCUMENT: Drawing No. 102064-24, titled "Holmes Models 48W7 & 49W7 Max Door Size: 9'0"W x 8'0"H", dated 12/06/99 & 01/19/00 with last revision on March 2001, sheets 1 of 1, prepared by Clopay Building Products, signed and sealed by M. Westerfield, P.E., bearing the Miami-Dade County Product Control Renewal stamp with the Notice of Acceptance number and expiration date by the Miami-Dade County Product Control Division.

MISSILE IMPACT RATING: Large and Small Missile Impact

LABELING: Each unit shall bear a permanent label with the manufacturer's name or logo, city, state and following statement: "Miami-Dade County Product Control Approved", unless otherwise noted herein.

RENEWAL of this NOA shall be considered after a renewal application has been filed and there has been no change in the applicable building code negatively affecting the performance of this product.

TERMINATION of this NOA will occur after the expiration date or if there has been a revision or change in the materials, use, and/or manufacture of the product or process. Misuse of this NOA as an endorsement of any product, for sales, advertising or any other purposes shall automatically terminate this NOA. Failure to comply with any section of this NOA shall be cause for termination and removal of NOA.

LIMITATION: This approval requires the manufacturer to do testing of all coils used to fabricate door panels under this Notice of Acceptance. A minimum of 2 specimens shall be cut from each coil and tensile tested according to ASTM E-8 by a Dade County approved laboratory selected and paid by the manufacturer. Every 3 months, four times a year, the manufacturer shall mail to this office: a copy of the tested reports with confirmation that the specimen were selected from coils at the manufacturer production facilities. And a notarized statement from the manufacturer that only coils with yield strength of 28,000 psi or more shall be used to make door panels for Dade County under this Notice of Acceptance

ADVERTISEMENT: The NOA number preceded by the words Miami-Dade County, Florida, and followed by the expiration date may be displayed in advertising literature. If any portion of the NOA is displayed, then it shall be done in its entirety.

INSPECTION: A copy of this entire NOA shall be provided to the user by the manufacturer or its distributors and shall be available for inspection at the job site at the request of the Building Official.

This NOA revises NOA # 01-0404.02 consists of this page 1 as well as the approval document mentioned above.

The submitted documentation was reviewed by **Candido F. Font PE.**

PRODUCT CONTROL ACCEPTED

Clopay Building Products Co.

NOTICE OF ACCEPTANCE: EVIDENCE SUBMITTED

(For File ONLY. Not part of NOA)

A. DRAWINGS

1. *Drawing prepared by Clopay Building Products Company, titled "Holmes Door Brand", Drawing No.102064-24, dated 12/06/99 & 01/19/00, with last revision on 03/2001, sheets 1 of 1, signed and sealed by M. W. Westerfield, PE.*

B. TESTS

1. *Test report of large missile impact test per PA 201, cyclic wind pressure test per PA 203 and uniform static air pressure test per PA 202 on "9' x 8' door model 73", prepared by American Test Lab of South Florida, report No. ATL 1112.01-96, dated 11/13/96, signed and sealed by W. Mehner, PE.*

C. CALCULATIONS

1. *Calculations dated 01/10/97; pages 1 through 2, prepared by M. W. Westerfield, signed and sealed by M. W. Westerfield, PE.*

D. MATERIAL CERTIFICATIONS

1. *Tensile test report No. CTL986B, prepared by Certified Testing Laboratories, dated 12/16/96, signed and sealed by R. Patel, PE.*
2. *Salt Spray Exposure test report No. MTS 258592, prepared by Celotex Corporation Testing Services, dated 08/17/98, signed and sealed by R. G. Miller, PE.*

E. STATEMENTS.

1. *Letter confirming that Holmes brand door and Clopay brand door have the same design and both are manufacturer by Clopay Building Products Company. The letter is issued by Clopay Building Products Company, dated 01/5/00 and signed by M. Westerfield, PE.*
2. *Affidavit of minimum yield strength compliance prepared by R. D. Shifflett employed by Clopay Building Products Company, signed by R. D. Shifflett and notarized by S. E. Rodenhauser on 03/29/01.*
3. *Affidavit of no financial interest prepared by Mark W. Westerfield, PE. with no date, signed by M. W. Westerfield PE. and notarized by M. E. Knisley.*
4. *Letter of code compliance prepared by Clopay Building Products Co. on 01/10/97, signed and sealed by M. W. Westerfield PE.*
5. *Letter of no change issued by Clopay Building Products Co. on 01/07/03, signed and sealed by M. Westerfield PE.*

Candido F. Font, PE.
Senior Product Control Division
NOA No 03-0114.02
Expiration Date: April 28, 2008
Approval Date: March 27, 2003

REVISIONS					
REV. NO.	ZONE:	DATE:	ECN NO.	APPVD:	DESCRIPTION
01	C1	3/2001		MWW	G-40 MIN. GALV. WAS G-60 GALV.

HOLMES MODELS 48W7 & 49W7

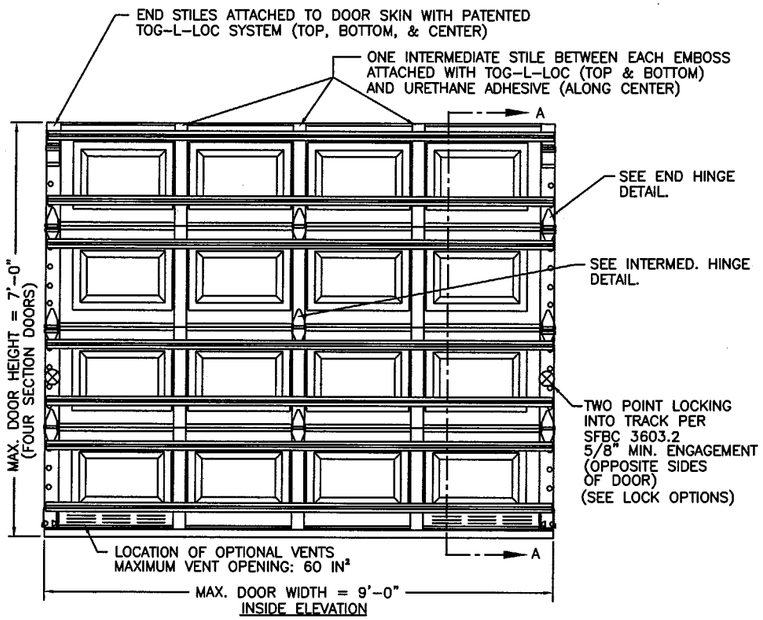

INSIDE ELEVATION

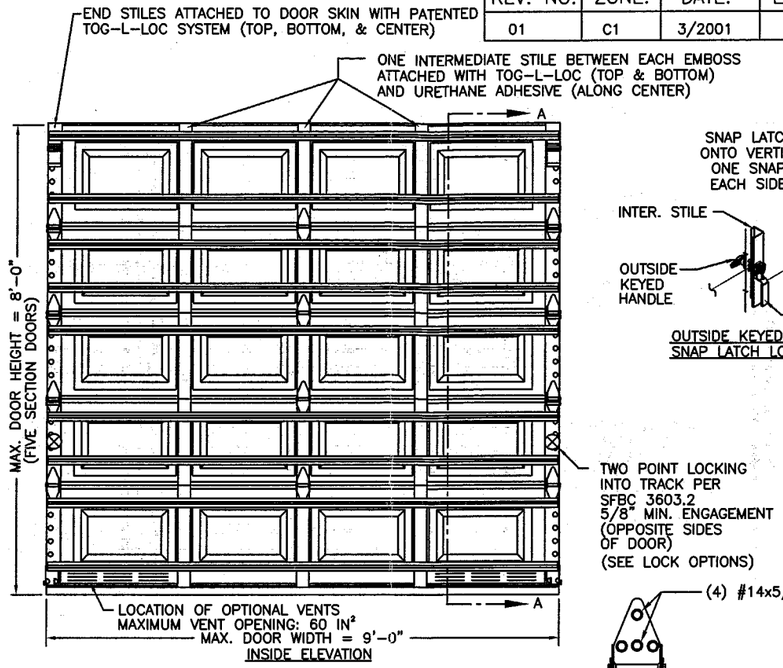

INSIDE ELEVATION

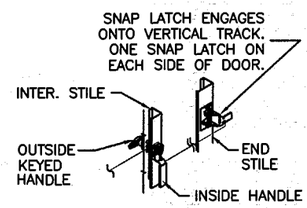

OUTSIDE KEYED LOCK SNAP LATCH LOCK OPTION

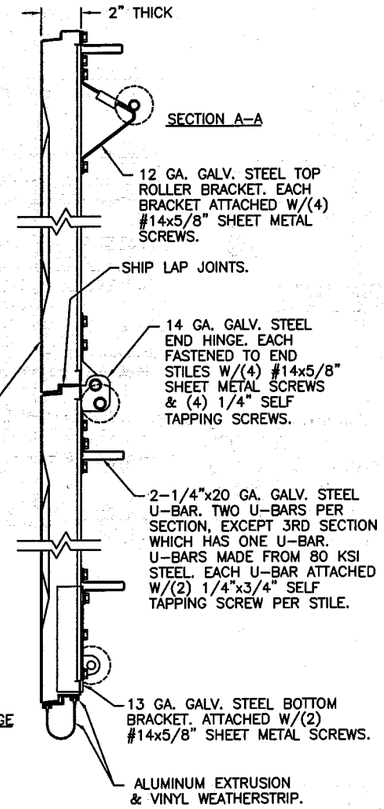

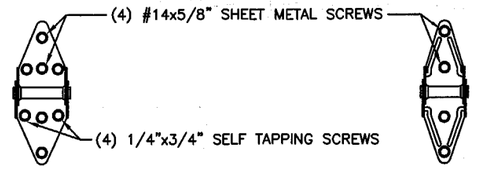

14 GA. END HINGE

18 GA. INTERMEDIATE HINGE

NOTE 1:
DOORS 6'6" HIGH CONSIST OF (4) SECTIONS; (2) OF 21" & (2) OF 18".
DOORS 7'0" HIGH CONSIST OF (4) SECTIONS; (4) OF 21".
DOORS 7'6" HIGH CONSIST OF (5) SECTIONS; (5) OF 18".
DOORS 8'0" HIGH CONSIST OF (5) SECTIONS; (2) OF 21" & (3) OF 18".

NOTE 2: SUPPORTING STRUCTURAL ELEMENTS SHALL BE DESIGNED BY A REGISTERED PROFESSIONAL ENGINEER FOR WIND LOADS SHOWN ON THIS DRAWING.

DEALER MODEL	RETAIL MODEL	DESCRIPTION*
49W7	48W7	24 GA. STEEL SKIN; 18 GA. PAINTED STEEL END STILES

*– ALL DOOR MODELS ARE RAISED PANEL EMBOSS

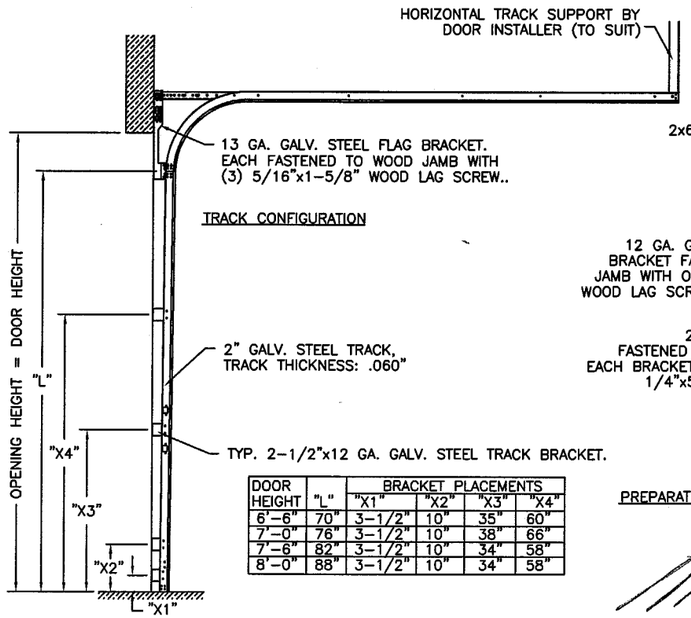

TRACK CONFIGURATION

DOOR HEIGHT	"L"	BRACKET PLACEMENTS			
		"X1"	"X2"	"X3"	"X4"
6'-6"	70"	3-1/2"	10"	35"	60"
7'-0"	76"	3-1/2"	10"	38"	66"
7'-6"	82"	3-1/2"	10"	34"	58"
8'-0"	88"	3-1/2"	10"	34"	58"

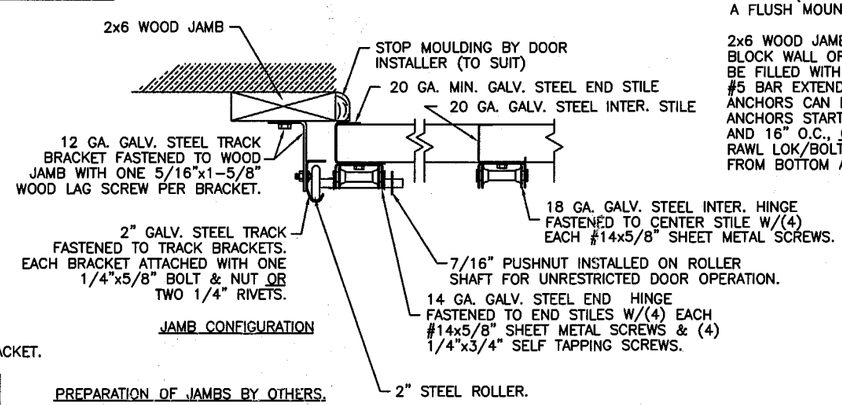

JAMB CONFIGURATION

PREPARATION OF JAMBS BY OTHERS.

THE 2x6 VERTICAL WOOD JAMBS ARE TO BE GRADE 2 OR BETTER YELLOW PINE. NO LOAD IS TRANSFERRED TO THE HORIZONTAL (TOP) JAMB. ALL JAMB FASTENERS MAY BE (BUT NOT REQUIRED) COUNTERSUNK TO PROVIDE A FLUSH MOUNTING SURFACE.

2x6 WOOD JAMB CAN BE ANCHORED TO GROUT REINFORCED BLOCK WALL OR CONCRETE COLUMN. BLOCK CELLS SHALL BE FILLED WITH CONCRETE AND REINFORCED WITH CONTINUOUS #5 BAR EXTENDING INTO THE FOOTING AND INTO TIE BEAMS. ANCHORS CAN BE 1/4"x1-3/4" EMBED TAPCON CONCRETE ANCHORS STARTING AT NO MORE THAN 8" FROM BOTTOM AND 16" O.C., OR WITH 3/8"x4" (1-3/4" EMBED) RAWL LOK/BOLT ANCHOR STARTING AT NO MORE THAN 8" FROM BOTTOM AND 24" O.C.

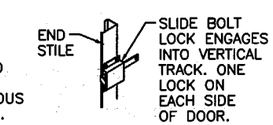

INSIDE SLIDE BOLT LOCK OPTION

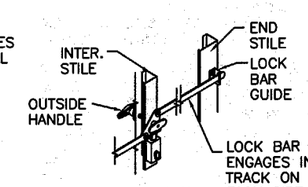

OUTSIDE KEYED LOCK LOCK BAR LOCKING

PRODUCT RENEWED
Complying with the Florida Building Code
Application No. 03-0114.02
Expiration Date 04/28/2008
By
Miami Dade Product Control Division

ORIGINAL DRAWINGS ARE SIGNED IN BLUE INK WITH A RAISED SEAL (EMBOSS).

MARK WESTERFIELD, P.E.
FLORIDA P.E. #48495
NORTH CAROLINA P.E. #23832

DESIGN LOADS: +42.0 PSF & -48.0 PSF.

1/7/03

Unless Stated Otherwise TOLERANCES are
.0 = ±.03
.00 = ±.015
.000 = ±.005
.0000 = ±.001
Degrees = ±1/2°
Unless Stated Otherwise DIMENSIONS ARE IN INCHES.

Third Angle Projection

CLOPAY BUILDING PRODUCTS COMPANY
8585 DUKE BLVD.
MASON, OH 45040
(513) 770-4800

HOLMES DOOR BRAND

DESCRIPTION: HOLMES MODELS 48W7 & 49W7 MAX DOOR SIZE 9'0"W x 8'0"H

DRAWN BY: NJE	DATE: 12/6/99	SCALE:	DWG. SIZE B
CHECKED BY: MWW	DATE: 1/19/00	SHEET 1 OF 1	
DWG. NO.: 102064-24		REV. NO. 01	