MIAMI-DADE

BUILDING CODE COMPLIANCE OFFICE (BCCO)
PRODUCT CONTROL DIVISION

MIAMI-DADE COUNTY, FLORIDA
METRO-DADE FLAGLER BUILDING
140 WEST FLAGLER STREET, SUITE 1603
MIAMI, FLORIDA 33130-1563
(305) 375-2901 FAX (305) 375-2908

NOTICE OF ACCEPTANCE (NOA)

Pella Corporation
102 Main Street
Pella, IA 50219

SCOPE:
This NOA is being issued under the applicable rules and regulations governing the use of construction materials. The documentation submitted has been reviewed by Miami-Dade County Product Control Division and accepted by the Board of Rules and Appeals (BORA) to be used in Miami Dade County and other areas where allowed by the Authority Having Jurisdiction (AHJ).

This NOA shall not be valid after the expiration date stated below. The Miami-Dade County Product Control Division (In Miami Dade County) and/or the AHJ (in areas other than Miami Dade County) reserve the right to have this product or material tested for quality assurance purposes. If this product or material fails to perform in the accepted manner, the manufacturer will incur the expense of such testing and the AHJ may immediately revoke, modify, or suspend the use of such product or material within their jurisdiction. BORA reserves the right to revoke this acceptance, if it is determined by Miami-Dade County Product Control Division that this product or material fails to meet the requirements of the applicable building code.

This product is approved as described herein, and has been designed to comply with the High Velocity Hurricane Zone of the Florida Building Code.

DESCRIPTION: Aluminum Clad Wood Fixed Window – Impact

APPROVAL DOCUMENT: Drawing No. **1032**, titled "Aluminum Clad Direct Glazed Fixed Windows", sheets 1 through 3 of 3, dated 12/05/00 with revision A1 dated 10/14/02, prepared by W. W. Schaefer Engineering & Consulting, P.A., signed and sealed by Warren W. Schaefer, P.E., bearing the Miami-Dade County Product Control Renewal stamp with the Notice of Acceptance number and expiration date by the Miami-Dade County Product Control Division.

MISSILE IMPACT RATING: Large and Small Missile Impact

LABELING: Each unit shall bear a permanent label with the manufacturer's name or logo, city, state and following statement: "Miami-Dade County Product Control Approved", unless otherwise noted herein.

RENEWAL of this NOA shall be considered after a renewal application has been filed and there has been no change in the applicable building code negatively affecting the performance of this product.

TERMINATION of this NOA will occur after the expiration date or if there has been a revision or change in the materials, use, and/or manufacture of the product or process. Misuse of this NOA as an endorsement of any product, for sales, advertising or any other purposes shall automatically terminate this NOA. Failure to comply with any section of this NOA shall be cause for termination and removal of NOA.

ADVERTISEMENT: The NOA number preceded by the words Miami-Dade County, Florida, and followed by the expiration date may be displayed in advertising literature. If any portion of the NOA is displayed, then it shall be done in its entirety.

INSPECTION: A copy of this entire NOA shall be provided to the user by the manufacturer or its distributors and shall be available for inspection at the job site at the request of the Building Official.
This NOA **renews NOA # 02-1021.05** and consists of this page 1 as well as approval document mentioned above.
The submitted documentation was reviewed by **Manuel Perez, P.E.**

PRODUCT CONTROL ACCEPTED

Pella Corporation

NOTICE OF ACCEPTANCE: EVIDENCE SUBMITTED

(For File ONLY. Not part of NOA)

A. DRAWINGS

1. Manufacturer's die drawings and sections.
2. Drawing No. **1032**, titled "Aluminum Clad Direct Glazed Fixed Windows", sheets 1 through 3 of 3, dated 12/05/00 with revision A1 dated 10/14/02, prepared by W. W. Schaefer Engineering & Consulting, P.A., signed and sealed by Warren W. Schaefer, P.E.

B. TESTS

Submitted under NOA# 02-1021.05

1. Test reports on 1)Uniform Static Air Pressure Test, Loading per FBC, TAS 20294
   2) Large Missile Impact Test per FBC, TAS 201-94
   3) Cyclic Wind Pressure Loading per FBC, TAS 203-94

   along with marked-up drawings and installation diagram of an aluminum clad wood fixed window, prepared by Architectural Testing, Inc., Test Report No. **ATI 02-34497.01**, dated 7/16/02, signed and sealed by Steven Urich, P.E.
2. Test reports on 1) Air Infiltration Test, per FBC, TAS 202-94
   2) Uniform Static Air Pressure Test, Loading per FBC, TAS 20294
   3) Water Resistance Test, per FBC, TAS 202-94
   4) Large Missile Impact Test per FBC, TAS 201-94
   5) Cyclic Wind Pressure Loading per FBC, TAS 203-94

   along with marked-up drawings and installation diagram of a rectangular and arched top/rectangular and side-by side, aluminum clad wood fixed windows, prepared by American Test Lab of South Florida, Test Report No. **ATL-0125.01**, dated 11/17/99, signed and sealed by William R. Mehner, P.E.

C. CALCULATIONS

Submitted under NOA# 02-1021.05

1. Anchor Calculations and structural analysis, prepared by Warren Schaefer, P.E. Inc., dated 9/7/01, signed and sealed by Warren Schaefer, P.E.

D. MATERIAL CERTIFICATIONS

Submitted under NOA# 02-1021.05

1. Notice of Acceptance No. **01-1204.01** issued to E.I. DuPont DeNemours for "Sentry Glass Plus" dated 1/17/02, expiring on 1/17/07.

E. STATEMENTS

1. None

F. OTHER

1. Notice of Acceptance No. **02-1021.05**, issued to Pella Corporation, for their Aluminum Clad Wood Fixed Window, approved on 11/21/02 and expiring on 04/07/03.

Manuel Perez

Manuel Perez, P.E.
Product Control Examiner
NOA No 03-0114.09
Expiration Date: April 7, 2008
Approval Date: March 6, 2003

GENERAL NOTES

1. THIS PRODUCT IS DESIGNED TO MEET THE FLORIDA BUILDING CODE (F.B.C.).
2. WOOD BUCKS BY OTHERS, MUST BE ANCHORED PROPERLY TO TRANSFER LOADS TO THE STRUCTURE.
3. PRODUCT ANCHORS SHALL BE AS LISTED AS SPACED AS SHOWN ON DETAILS. ANCHOR EMBEDMENT TO BASE MATERIAL SHALL BE BEYOND WALL FINISH OR STUCCO.
4. IMPACT RESISTANT SHUTTERS NOT REQUIRED.
5. ALL DIMENSIONS ARE GIVEN IN INCHES UNLESS OTHERWISE SHOWN.
6. LATEX OR SILICONE CAULKING SEALANT SHALL BE USED BETWEEN ALUMINUM CLADDING AND WOOD BUCK.

PRODUCT DESCRIPTION

FRAME CONSTRUCTION:
SELECT SOFT WOOD, FINGER JOINTED WITH CLEAR PINE VENEER. EXTERIOR SURFACE CLAD WITH ALUMINUM.

CORNER CONSTRUCTION:
WOOD FRAME MEMBERS ARE ATTACHED TOGETHER WITH (3) #8 X 2" FHWS AT EACH CORNER. ALUM. CLADDING W/MITER CUT CORNERS IS ATTACHED TO HEAD, JAMB & SILL AT EACH CORNER USING A PLASTIC CORNER KEY, WITH (2) #8 X 1/2" FH SMS.

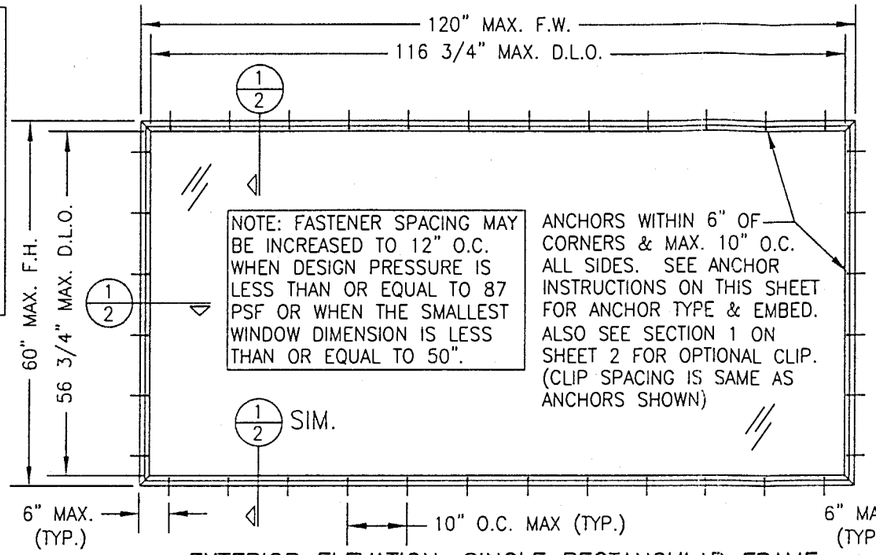

EXTERIOR ELEVATION; SINGLE RECTANGULAR FRAME

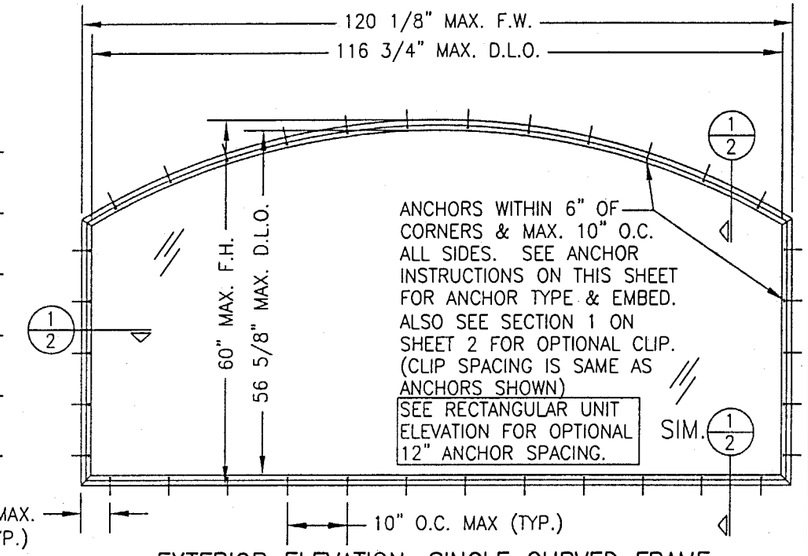

EXTERIOR ELEVATION; SINGLE CURVED FRAME

TYP. FRAME ANCHORS (DIRECT SETS):

1. FRAME TO 2X_ WOOD BUCK: NO. 10 SMS WITH MIN. 1 3/8" BUCK EMBED SPACED PER ELEVATIONS.
2. FRAME TO BLOCK/CONCR. WITH 1X_ CONT. SPACER: 1/4" TAPCONS WITH MIN. 1 1/4" BLOCK/CONCR. EMBED & MIN. 2 1/2" BLOCK/CONCR. EDGE DISTANCE.
3. MULLION ENDS: ADDITIONAL NO. 10 SMS WITH MIN. 1 3/8" BUCK EMBED OR 1/4" TAPCON WITH MIN. 1 1/4" BLOCK/CONCR. EMBED PER ELEVATIONS.

NOTE: EACH ANCHOR MAY BE REPLACED WITH AN INSTALLATION CLIP. SEE SECTION 1 ON SHEET 2 FOR CLIP INSTALLATION DETAIL.

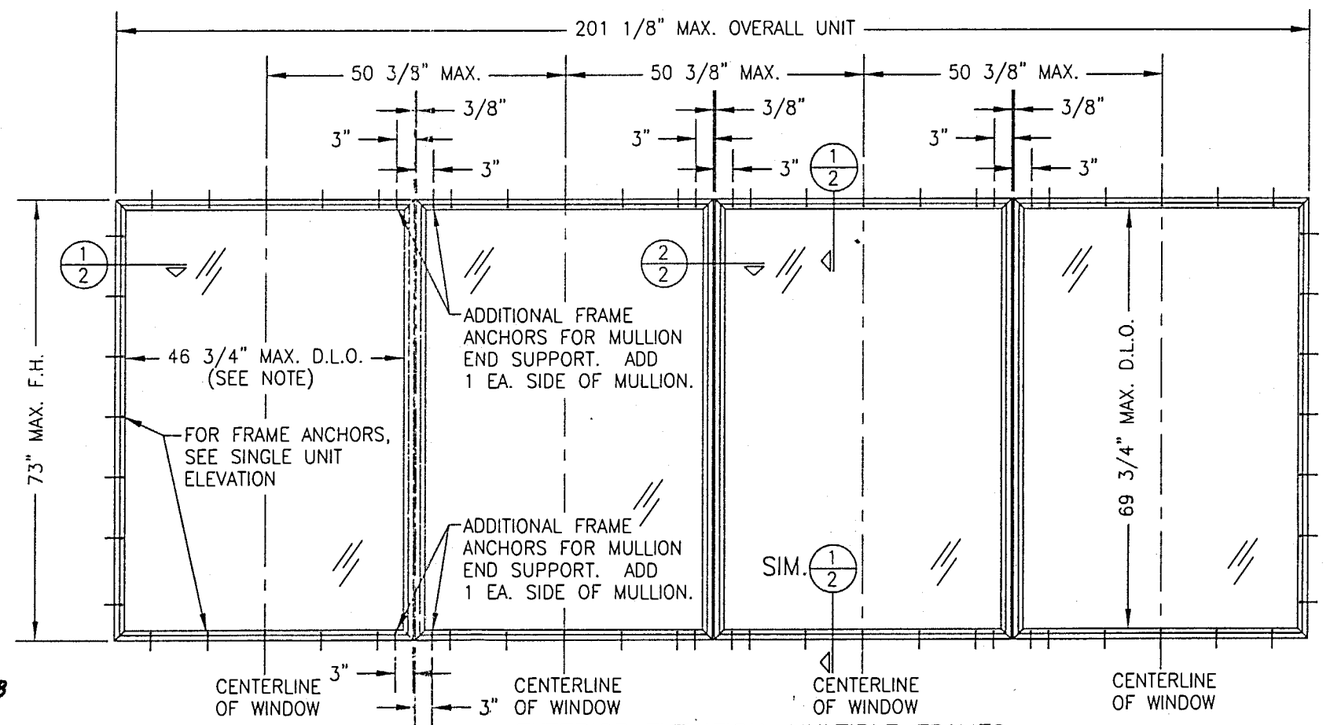

EXTERIOR ELEVATION; MULTIPLE FRAMES
(MAX. 4 UNITS MAY BE COMBINED)

APPROVED SHAPES

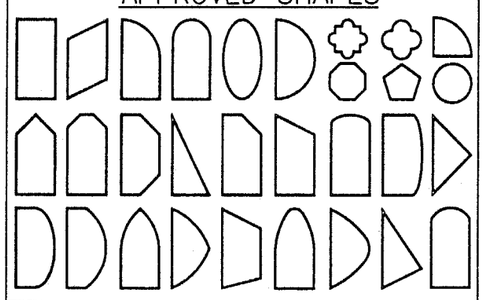

NOTES:
1. OTHER SHAPES MAY APPLY PROVIDING THEY ARE SIMILAR TO THOSE SHOWN & HAVE CORNER CONSTRUCTION PER CORNER DETAILS.
2. ALL SHAPED UNITS MUST FIT INSCRIBED INTO THE ALLOWABLE RECTANGULAR UNITS & BE GOVERNED BY THE ALLOWABLE PRESSURE OF THE RESPECTIVE RECTANGULAR UNIT.
3. SHAPED WINDOWS ARE INSTALLED THE SAME AS THE RECTANGULAR WINDOWS SHOWN IN ELEVATION. SEE SECTIONS & CORNER DETAILS FOR DETAIL SPECIFIC TO SHAPED WINDOWS.

PRODUCT RENEWED
as complying with the Florida Building Code
Acceptance No. 03-0114.09
Expiration Date APRIL 7, 2008
By Manuel Perez
Miami Dade Product Control Division

FOR ALLOWABLE DESIGN WIND LOADS ON INDIVIDUAL WINDOWS, SEE LOAD TABLES ON SHEET 3.

MAX. ALLOWABLE DESIGN PRESSURE ON MULLED UNITS SHALL BE THE LESSER OF +90/−95 PSF OR AS ALLOWED BY THE INDIVIDUAL WINDOWS.

PRODUCT REVISED
as complying with the Florida Building Code
Acceptance No. 02-1021.05
Expiration Date APRIL 7, 2003
By Manuel Perez
Miami Dade Product Control Division

DRAWN BY: W.W.S.	CHECKED BY: W.W.S.
PLOT: 1=16	DATE: 12/05/00

NO.	REVISION DESCRIPTION	BY	DATE
A1	ADD SHAPED WINDOW TABLE	W.W.S.	10/14/02

DRAWING TITLE: ALUMINUM CLAD DIRECT GLAZED FIXED WINDOWS

MANUFACTURER: PELLA CORPORATION
102 MAIN STREET
PELLA, IA 50219
641-621-1000

CONSULTANTS: W. W. SCHAEFER ENGINEERING & CONSULTING, P.A.
600 SANDTREE DRIVE; SUITE 203B
PALM BEACH GARDENS, FL 33403
PHONE: 561-775-4902 FAX: 561-775-4903

CERTIFICATION: OCT 14 2002
WARREN W. SCHAEFER, P.E.
P.E. NO. 44135

DRAWING NO. 1032 REV.

SHEET NO. 1 OF 3

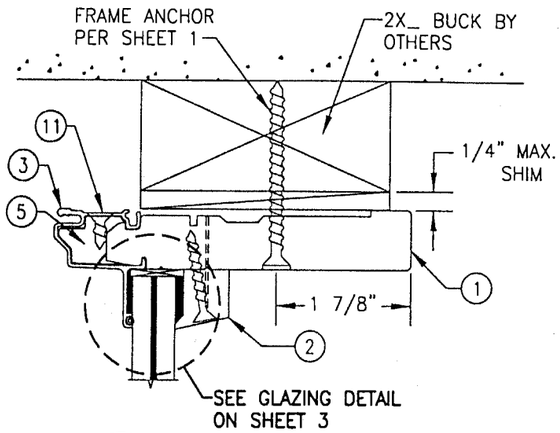

1/2 STANDARD CROSS SECTION (SCREW MOUNT)

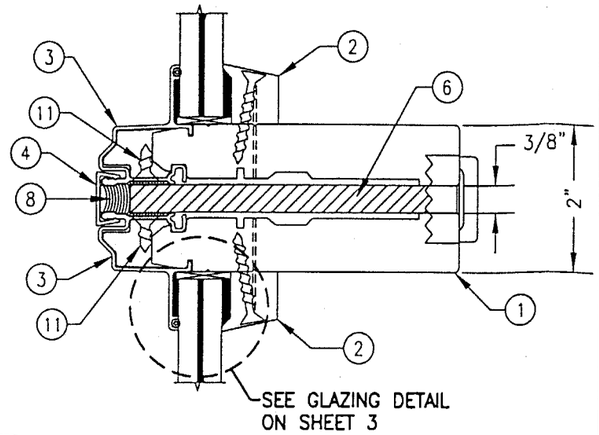

2/2 TYP. MULLION DETAIL W/WOOD REINF.

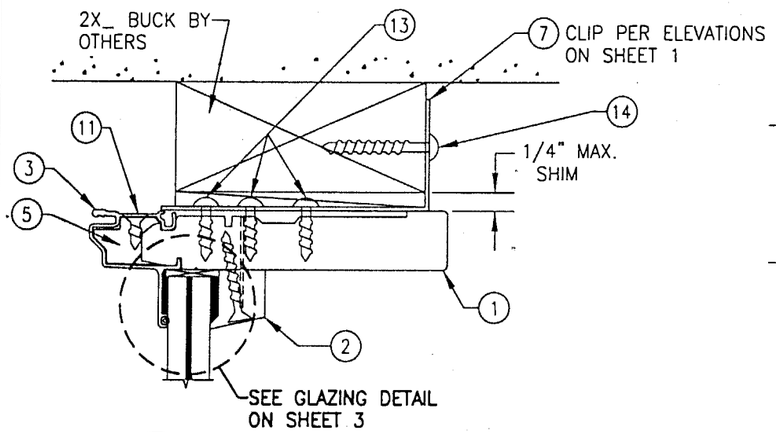

1/2 STANDARD CROSS SECTION (CLIP MOUNT)

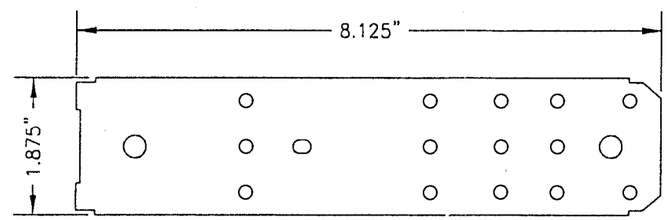

INSTALLATION CLIP
0.05" THK. RB 65 GALV. STEEL

BILL OF MATERIALS

ITEM #	ITEM DESCRIPTION	MANUFACTURER/NOTES
	PARTS	
1	JAMB	4.27" X 0.812" SELECT SOFT WOOD
2	GLAZING STOP	0.665" X 0.815" SELECT SOFT WOOD
3	JAMB CLADDING/COVER	0.045" THK. 6063-T6 ALUMINUM
4	MULLION CLIP	0.047" THK. 6063-T6 ALUMINUM (CONT.)
5	JAMB CORNER KEY	NYLON
6	WOOD MULLION REINFORCEMENT	3/8"X4 13/16" P.T. SO. PINE (G = 0.55)
7	INSTALLATION CLIP	0.05" THK. RB 65 GALV. STEEL
	SEALS & SEALANTS	
8	SILICONE SEALANT	LATEX
9	BULB GASKET	PVC
	MISCELLANEOUS FASTENERS	
10	#6 X 1 1/4" S.S. FH	3" FROM CORNERS & 9" MAX. O.C.
11	#10 X 1/2" S.S. PFH	2 PER JAMB CORNER KEY
12	1" X 1/2" CORRUGATED FASTENER	4" FROM ENDS & 10" TO 12" O.C.
13	#8 X 3/4" PH SCREW	3 PER CLIP INTO JAMB
14	#8 X 1 1/2" PH SCREW	1 PER CLIP INTO BUCK
15	1/4" X 1 1/8" 18 GA STAPLE	WITHIN 4" FROM CORNERS & MAX 12" O.C.

PRODUCT RENEWED
as complying with the Florida
Building Code
Acceptance No. 03-0114.09
Expiration Date APRIL 7, 2008
By Manuel Perez
Miami-Dade Product Control
Division

PRODUCT REVISED
as complying with the Florida
Building Code
Acceptance No. 02-1021.05
Expiration Date APRIL 7, 2003
By Manuel Perez
Miami-Dade Product Control
Division

DRAWN BY: W.W.S.	CHECKED BY: W.W.S.
PLOT: 1=2	DATE: 12/05/00

NO.	REVISION DESCRIPTION	BY	DATE

DRAWING TITLE
ALUMINUM CLAD DIRECT GLAZED FIXED WINDOWS

MANUFACTURER
PELLA CORPORATION
102 MAIN STREET
PELLA, IA 50219
641-621-1000

CONSULTANTS
W. W. SCHAEFER ENGINEERING & CONSULTING, P.A.
600 SANDTREE DRIVE; SUITE 203B
PALM BEACH GARDENS, FL 33403
PHONE: 561-775-4902 FAX: 561-775-4903

CERTIFICATION
OCT 14 2002
WARREN W. SCHAEFER, P.E.
P.E. NO. 44135

DRAWING NO. 1032 REV.

SHEET NO. 2 OF 3

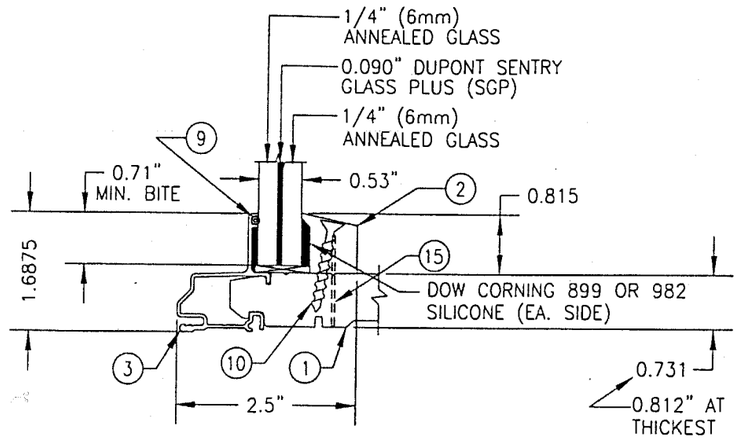

GLAZING DETAIL
1/2" ANNEALED LAMINATED GLASS

ALLOWABLE DESIGN PRESSURE

SHORT DIMENSION (1)	DESIGN LOAD CAPACITY (POSITIVE & NEGATIVE PSF) (2) (3)																			
	POS.	NEG.	POS.	NEG.	POS.	NEG.	POS.	NEG.	POS.	NEG.	POS.	NEG.	POS.	NEG.	POS.	NEG.	POS.	NEG.	POS.	NEG.
30"	90	95	90	95	90	95	90	95	90	95	90	95	90	95	90	95	90	95	90	95
36"	90	95	90	95	90	95	90	95	90	95	90	95	90	95	90	95	90	95	0	0
42"	90	95	90	95	90	95	90	95	90	95	90	93.2	0	0	0	0	0	0	0	0
48"	90	95	90	95	90	95	86.2	86.2	0	0	0	0	0	0	0	0	0	0	0	0
50"	90	95	90	95	90	91.8	81.6	81.6	0	0	0	0	0	0	0	0	0	0	0	0
54"	90	95	90	92.6	82.5	82.5	0	0	0	0	0	0	0	0	0	0	0	0	0	0
60"	N/A	N/A	81.0	81.0	0	0	0	0	0	0	0	0	0	0	0	0	0	0	0	0
(1) LONG DIMENSION	54"		60"		66"		73"		78"		84"		90"		96"		108"		120"	

(1) ALL WINDOW DIMENSION VALUES SHOWN ARE +/-1/2" & ARE FRAME (F.H. & F.W.) DIMENSIONS
(2) "N/A" = SIZE NOT APPLICABLE DUE TO SHORT DIMENSION BEING LARGER THAN LONG DIMENSION.
(3) "0" MEANS THAT THAT SIZE CAN NOT BE USED AND ALLOWABLE LOAD = 0.

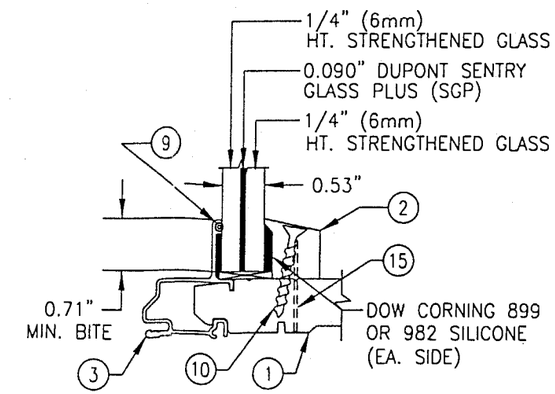

GLAZING DETAIL
1/2" HT. STRENGTHENED LAMINATED GLASS

ALLOWABLE DESIGN PRESSURE WITH 1/2" HEAT STRENGTHENED LAMINATED GLASS = +75/-80 PSF FOR ALL WINDOW SIZES UP TO 50.0 SQ.FT. IN FRAME AREA.

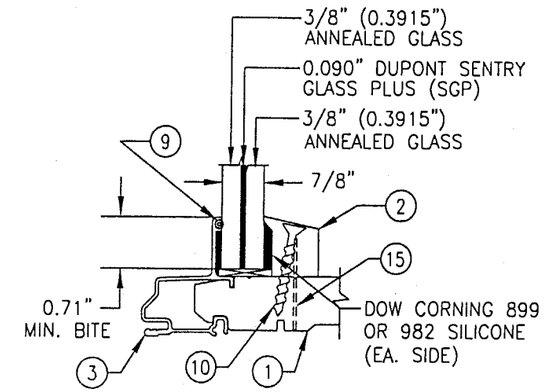

GLAZING DETAIL
7/8" ANNEALED LAMINATED GLASS

ALLOWABLE DESIGN PRESSURE

SHORT DIMENSION (1)	DESIGN LOAD CAPACITY (POSITIVE & NEGATIVE PSF)					
	POS.	NEG.	POS.	NEG.	POS.	NEG.
54"	90	105	90	105	90	105
60"	90	105	90	98.9	90	90.9
(1) LONG DIMENSION	96"		108"		120"	

ALL SIZES SMALLER THAN THOSE SHOWN IN THIS TABLE ARE ACCEPTABLE WITH A DESIGN PRESSURE OF +90/-105 PSF.

PRODUCT RENEWED
as complying with the Florida
Building Code
Acceptance No. 03-0114.09
Expiration Date APRIL 7, 2008
By Manuel Perez
Miami-Dade Product Control
Division

PRODUCT REVISED
as complying with the Florida
Building Code
Acceptance No. 02-1021.05
Expiration Date APRIL 7, 2003
By Manuel Perez
Miami-Dade Product Control
Division

DRAWN BY: W.W.S.	CHECKED BY: W.W.S.
PLOT: 1=2	DATE: 12/05/00

NO.	REVISION DESCRIPTION	BY	DATE

DRAWING TITLE
ALUMINUM CLAD DIRECT GLAZED FIXED WINDOWS

MANUFACTURER
PELLA CORPORATION
102 MAIN STREET
PELLA, IA 50219
641-621-1000

CONSULTANTS
W. W. SCHAEFER ENGINEERING & CONSULTING, P.A.
600 SANDTREE DRIVE, SUITE 203B
PALM BEACH GARDENS, FL 33403
PHONE: 561-775-4902 FAX: 561-775-4903

CERTIFICATION
OCT 14 2002
WARREN W. SCHAEFER, P.E.
P.E. NO. 44135

DRAWING NO. 1032
REV.
SHEET NO. 3 OF 3