MIAMI-DADE

BUILDING CODE COMPLIANCE OFFICE (BCCO)
PRODUCT CONTROL DIVISION

MIAMI-DADE COUNTY, FLORIDA
METRO-DADE FLAGLER BUILDING
140 WEST FLAGLER STREET, SUITE 1603
MIAMI, FLORIDA 33130-1563
(305) 375-2901 FAX (305) 375-2908

# NOTICE OF ACCEPTANCE (NOA)

**ES Products, Inc.**
**280 Franklin St.**
**Bristol, RI 02809**

## SCOPE:

This NOA is being issued under the applicable rules and regulations governing the use of construction materials. The documentation submitted has been reviewed by Miami-Dade County Product Control Division and accepted by the Board of Rules and Appeals (BORA) to be used in Miami Dade County and other areas where allowed by the Authority Having Jurisdiction (AHJ).

This NOA shall not be valid after the expiration date stated below. The Miami-Dade County Product Control Division (In Miami Dade County) and/or the AHJ (in areas other than Miami Dade County) reserve the right to have this product or material tested for quality assurance purposes. If this product or material fails to perform in the accepted manner, the manufacturer will incur the expense of such testing and the AHJ may immediately revoke, modify, or suspend the use of such product or material within their jurisdiction. BORA reserves the right to revoke this acceptance, if it is determined by Miami-Dade County Product Control Division that this product or material fails to meet the requirements of the applicable building code.

This product is approved as described herein, and has been designed to comply with the High Velocity Hurricane Zone of the Florida Building Code.

**DESCRIPTION: ES Products, Inc.**

**LABELING:** Each unit shall bear a permanent label with the manufacturer's name or logo, city, state and following statement: "Miami-Dade County Product Control Approved", unless otherwise noted herein.

**RENEWAL** of this NOA shall be considered after a renewal application has been filed and there has been no change in the applicable building code negatively affecting the performance of this product.

**TERMINATION** of this NOA will occur after the expiration date or if there has been a revision or change in the materials, use, and/or manufacture of the product or process. Misuse of this NOA as an endorsement of any product, for sales, advertising or any other purposes shall automatically terminate this NOA. Failure to comply with any section of this NOA shall be cause for termination and removal of NOA.

**ADVERTISEMENT:** The NOA number preceded by the words Miami-Dade County, Florida, and followed by the expiration date may be displayed in advertising literature. If any portion of the NOA is displayed, then it shall be done in its entirety.

**INSPECTION:** A copy of this entire NOA shall be provided to the user by the manufacturer or its distributors and shall be available for inspection at the job site at the request of the Building Official.

This consists of pages 1 through 11.
The submitted documentation was reviewed by Frank Zuloaga, RRC

## ROOFING ASSEMBLY APPROVAL:

**Category:** Roofing Fasteners
**Sub Categories:** Base Sheet, Insulation, Shingles

## 1.SCOPE

This approves ES Products, Inc. roofing fastener systems described in Section 3 of this Notice of Acceptance, designed to comply with the Florida Building Code.

## 2. PRODUCT DESCRIPTION

| Product | Dimensions | Test Specifications | Product Description |
|---|---|---|---|
| FM-30 Bearing Stress Plate | 2.7" round stress plate | TAS 114<br>TAS 117 | Steel bearing stress plate, coated with AZ-55 Galvalume or black urethane coating on both sides, for use with FM-45 and FM-60 fasteners for base ply attachment. |
| FM-45 Base Ply Fastener | 1.2" head x 1.2" long | TAS 114<br>TAS 117 | FM-45 base ply fasteners are formed from 0.013 in. thick G-90 hot dipped galvanized steel. The integral rib reinforced cap is coated on both sides with a black urethane coating. The stems are uncoated. For use in NVS concrete and various poured gypsum decks. |
| FM-60 Base Ply Fastener | 1.2" head x 1.7" long | TAS 114<br>TAS 117 | Formed from 0.013 in. thick G-90 hot dipped galvanized steel. The integral rib reinforced cap is coated on both sides with a black urethane coating. Stems are not coated. For use in cellular or aggregate lightweight concrete decks and various poured gypsum decks. |
| FM-75 Assembled Base Ply Fastener | 2.7" head x 1.2" long | TAS 114<br>TAS 117 | Formed from 0.013 in. thick G-90 hot dipped galvanized steel. The integral rib reinforced cap is coated on both sides with a black urethane coating. A 2.7 in. diameter disc formed from 0.013 AZ-55 Galvalume steel is factory assembled to each fastener. For use in cellular and aggregate lightweight concrete decks and various poured gypsum decks. |

| | | | |
|---|---|---|---|
| FM-90 Assembled Base Ply Fastener | 2.7" head x 1.7" long | TAS 114<br>TAS 117 | Formed from 0.013 in. thick G-90 hot dipped galvanized steel. The integral rib reinforced cap is coated on both sides with a black urethane coating. A 2.7 in. diameter disc formed from 0.013 AZ-55 Galvalume steel is factory assembled to each fastener. For use in cellular and aggregate lightweight concrete decks and various poured gypsum decks. |
| Insuldeck Loc-Nail Assembled Base Ply Fastener | 2.7" head x 1-7/8" long | TAS 114<br>TAS 117 | Formed from .024" thick AZ-55 hot dipped Galvalume steel. A 2.7" diameter disk formed from .013" AZ-55 Galvalume steel is factory assembled to each fastener. For use in cementitious wood fiber decks. |
| Nail-Tite Type A | 1.7" head x 1.5" long | TAS 114<br>TAS 117 | Galvalume AZ-55 steel cap and G-90 galvanized shank. One piece fastener for use in new or existing gypsum decks. |
| Nail-Tite Type R | 1.7" head x 1.0" long | TAS 114<br>TAS 117 | Galvalume AZ-55 steel cap and G-90 galvanized shank. One piece fastener for use in existing gypsum decks. |
| Twin Loc-Nail | 2.7" head x 1.8" long,<br>2.7" head x 2.8" long,<br>2.7" head x 3.8" long,<br>2.7" head x 4.8" long | TAS 114<br>TAS 117 | Tube formed from .030" thick G-90 hot dipped galvanized steel. A 2.7" diameter disk formed from .018" AZ-55 Galvalume steel is factory assembled to each fastener. Locking staple formed from .080" coated steel is factory assembled into tube. For base sheet and insulation attachment to new or existing cementitious wood fiber, poured gypsum and lightweight concrete decks. |
| Do-All Loc-Nail | .435" head x 1.4" long<br>.435" head x 1.8" long | | One-piece stainless steel fasteners for shingle attachment to gypsum board, gypsum plank, plywood, wood, and composite decks. |
| Tin Tag | 1.625" round stress plate<br>With or without .235" diameter central hole | | Steel bearing stress plate, coated with AZ-55 Galvalume or G-90 galvanized for use with roofing nails or Do-All Loc-Nails (w/.235" central hole) to attach underlayment or base sheet. |

## 2.1 TYPICAL PROPERTIES

**Note:** **A margin of safety of 2 has been applied to the listed test results.**

| Withdrawal Resistance Performance - TAS 117(A) - Static Load | | | |
|---|---|---|---|
| **Fastener** | **Deck Type** | **Static Withdrawal Resistance (lbf)** | |
| FM-45 & FM-75 | Poured gypsum | 30.0 | |
| Nail-Tite Type A | Poured gypsum | 69.4 | |
| Nail-Tite Type R | Poured gypsum | 67.3 | |
| FM-60 & FM-90 | Min. 200 psi cellular Lightweight concrete | 3 day cure 32.1 | 28 day cure 53.5 |
| | Min. 200 psi aggregate lightweight concrete | 3 day cure 39.9 | 28 day cure 77.3 |
| Insuldeck Loc-Nail | Cementitious wood fiber | 31.8 | |
| Twin Loc-Nail | Poured gypsum | 262.7 | |
| Twin Loc-Nail | Cementitious wood fiber | 176.2 | |

| Withdrawal Resistance Performance - TAS 117(A) - Pulsating Load | | |
|---|---|---|
| **Fastener** | **Deck Type** | **Static Withdrawal Resistance (lbf)** |
| FM-45 & FM-75 | Poured gypsum | 25.8 |
| Nail-Tite Type A | Poured gypsum | 51.4 |
| Nail-Tite Type R | Poured gypsum | 37.2 |
| FM-60 & FM-90 | Min. 200 psi cellular lightweight concrete | 28 day cure - 42.9 |
| | Min. 200 psi aggregate lightweight concrete | 28 day cure - 66.3 |
| Insuldeck Loc-Nail | Cementitious wood fiber | 20.8 |
| Twin Loc-Nail | Poured gypsum | 196.0 |
| Twin Loc-Nail | Cementitious wood fiber | 105.0 |

| Base Sheet Rupture Performance, TAS 117(B): 2.7" FM-30 Plate (FM-45 with FM-30, FM-60 with FM-30, FM-75 or FM-90) or Insuldeck Loc-Nail | | | | | |
|---|---|---|---|---|---|
| **Manuf.** | **Base Sheet** | **Rupture Value (lbf)** | **Manuf.** | **Base Sheet** | **Rupture Value (lbf)** |
| Honeywell | Glass Fiber Base Sheet | 84 | Johns Manville | Glasbase | 103 |
| | Vented Base Sheet | 85 | | Dynabase | 104 |
| Celotex | Channel Vent GB | 95 | | Ventsulation | 109 |
| | Vaporbar GB | 92 | Siplast | Parabase | 101 |
| | Hydrostop | 102 | | Parabase Plus | 100 |
| Firestone | MB Base | 88 | Soprema | Sopra-G | 103 |
| GAF | GAFGLAS #75 | 103 | | Elastophene 180 | 107 |

| | | | | | |
|---|---|---|---|---|---|
| | Stratavent | 89 | | Sopralene 180 | 115 |
| CertainTeed | Flex-I-Glas Base | 106 | Tamko | Nail Fast | 99 |
| | PolySMS | 111 | | Versa Base | 106 |
| Koppers | Glass Fiber Base | 108 | Tremco | BURmastic Glass Ply | 114 |
| | Organic Base | 94 | | BURmastic Composite Ply | 114 |
| Malarkey | #501 | 110 | U.S. Intec | Ultra Base | 95.0 |
| | #602 | 107 | | Flex Base | 111 |
| | #603 | 114 | | Modified Base | 111 |
| | #605 | 109 | | Permavent | 117 |
| Nord | NBS G-2 Base | 102 | W.P Hickman | Multi Ply | 112 |
| | Nordstar Base | 110 | | Performance Ply | 113 |
| | | | | Pika Ply SS-2 | 116 |

| **Base Sheet Rupture Performance, TAS 117(B): 1.7" Head (Nail-Tite, Type A or R)** | | | | | |
|---|---|---|---|---|---|
| **Manuf.** | **Base Sheet** | **Rupture Value (lbf)** | **Manuf.** | **Base Sheet** | **Rupture Value (lbf)** |
| Honeywell | Glass Fiber Base Sheet | 60 | Johns Mansville | Glasbase | 45 |
| | Vented Base Sheet | 61 | | Dynabase | 73 |
| Celotex | Channel Vent GB | 60 | | Ventsulation | 78 |
| | Vaporbar GB | 61 | | PermaPly 28 | 56 |
| Firestone | MB Base | 59 | SOPREMA | Sopra-G | 63 |
| GAF | GAFGLAS #75 | 49 | | Modified Sopra-G | 52 |
| | Stratavent | 56 | Tamko | Glass-Base | 70 |
| | Ruberoid Base | 71 | | VaporChan | 75 |
| CertainTeed | Flex-I-Glas Base | 77 | Tremco | BURMastic Composite Ply | 78 |
| | PolySMS | 79 | | BURMastic Glass Ply | 61 |
| Malarkey | #501 | 52 | US Intec | Ultrabase | 71 |
| | #515 | 76 | | Flex Base 30 | 53 |
| | #602 | 74 | | Modified Base Plus | 75 |
| | #603 | 79 | WP Hickman | Multi-Ply Glass | 71 |
| | #605 | 78 | | Performance Ply | 53 |

| Base Sheet Rupture Performance, TAS 117(B): 2.7" Head | | | | | |
|---|---|---|---|---|---|
| Twin Loc-Nail | | | | | |
| **Manuf.** | **Base Sheet** | **Rupture Value (lbs.)** | **Manuf.** | **Base Sheet** | **Rupture Value (lbs.)** |
| Honeywell | Black Armor base Sheet | 219.2 | John Mansville | Dynabase | 301.9 |
| Bitec | Beta Base | 240.0 | John Mansville | Vestulation | 227.7 |
| CertainTeed | Glasbase | 179.0 | John Mansville | Perma Ply-28 | 275.4 |
| Certainteed | Flex-I-Glas Base | 240.2 | Siplast | Parabase | 217.4 |
| CertainTeed | Flex-I-Glas All Weather Empire Base | 249.0 | Siplast | Parabase Plus | 279.4 |
| Firestone | MB Base | 256.2 | Soprema | Sopra-G | 245.0 |
| GAF | GAFGLAS Stratavent | 237.9 | Soprema | Modified Sopra-G | 206.4 |
| GAF | GAFGLAS Stratavent perforated | 193.5 | Tamko | Glass-Base | 233.6 |
| GAF | GAFGLAS #75 | 234.0 | Tamko | Vapor-Chan | 315.8 |
| WP Hickman | Multiply glass | 266.3 | Tamko | Base-N-Ply | 206.1 |
| WP Hickman | Multiply glass CL | 381.2 | | | |

## 3. APPROVED APPLICATIONS

**Tradename:** **FM-45 Base Sheet Fastener**

Compatible Plate(s): FM-30 Discs.

Application: See specific Roof Assembly Product Control Notice of Acceptance for fastener density and Approved attachment patterns.

Deck: Approved NVS lightweight concrete, various poured gypsums, and existing gypsum. See lightweight concrete deck Notice of Acceptance for Approved deck systems.

**Tradename:** **FM-60 Base Sheet Fastener**

Compatible Plate(s): FM-30 Discs.

Application: See specific Roof Assembly Product Control Notice of Acceptance for fastener density and Approved attachment patterns.

Deck: Approved minimum 200-psi aggregate or cellular lightweight concrete. See lightweight concrete deck Notice of Acceptance for Approved deck systems

| | |
|---|---|
| **Tradename:** | **FM-75 Assembled Base Sheet Fastener** |
| Compatible Plate(s): | N/A |
| Application: | FM-75 Base Ply Fastener is an approved and acceptable alternate to the Olympic Assembled CR 1.2" Base Sheet Fastener. FM-75 Base Ply Fasteners may be used in any approved Roof Assembly NOA where the Olympic Assembled CR 1.2" Base Sheet Fastener is referenced. Approved fastening patterns and densities listed in any approved Roof Assembly NOA containing the Olympic Assembled CR 1.2" Base Sheet Fastener shall be acceptable when using FM-75 Base Ply Fasteners. |
| Deck: | Approved NVS lightweight concrete, various poured gypsums, existing gypsum. See lightweight concrete deck Notice of Acceptance for Approved deck systems |
| **Tradename:** | **FM-90 Assembled Base Sheet Fastener** |
| Compatible Plate(s): | N/A |
| Application: | FM-90 Base Ply Fastener is an approved and acceptable alternate to the Olympic Assembled CR 1.7" Base Sheet Fastener. FM-90 Base Ply Fasteners may be used in any approved Roof Assembly NOA where the Olympic Assembled CR 1.7" Base Sheet Fastener is referenced. Approved fastening patterns and densities listed in any approved Roof Assembly NOA containing the Olympic Assembled CR 1.7" Base Sheet Fastener shall be acceptable when using FM-90 Base Ply Fasteners. |
| Deck: | Approved minimum 200-psi aggregate or cellular lightweight concrete. See lightweight concrete deck Notice of Acceptance for Approved deck systems. |
| **Tradename:** | **Nail-Tite Type A** |
| Compatible Plate(s): | N/A |
| Application: | See specific Roof Assembly Product Control Notice of Acceptance for fastener density and Approved attachment patterns. |
| Deck: | New or existing gypsum. |
| **Tradename:** | **Nail-Tite Type R** |
| Compatible Plate(s): | N/A |
| Application: | See specific Roof Assembly Product Control Notice of Acceptance for fastener density and Approved attachment patterns. |
| Deck: | Existing gypsum |

| | |
|---|---|
| **Tradename:** | **Insuldeck Loc-Nail Assembled Base Sheet Fastener** |
| Compatible Plate(s): | N/A |
| Application: | See specific Roof Assembly Product Control Notice of Acceptance for fastener density and Approved attachment patterns. |
| Deck: | Cementitious Wood Fiber. |
| **Tradename:** | **Twin Loc-Nail Assembled Base Sheet/Insulation Fastener** |
| Compatible Plate(s): | N/A |
| Application: | See specific Roof Assembly Product Control Notice of Acceptance for fastener density and Approved attachment patterns. |
| Deck: | New or sound existing Cementitious Wood Fiber, Poured Gypsum, Lightweight Concrete. |
| **Tradename:** | **Do-All Loc-Nail** |
| Compatible Plate(s): | Tin Tab with .235" central hole. |
| Application: | Shingle attachment (no plate), Base sheet/underlayment attachment (with plate). |
| Deck: | Gypsum Board, Gypsum Plank, Plywood, Wood, and Composite Decks. |

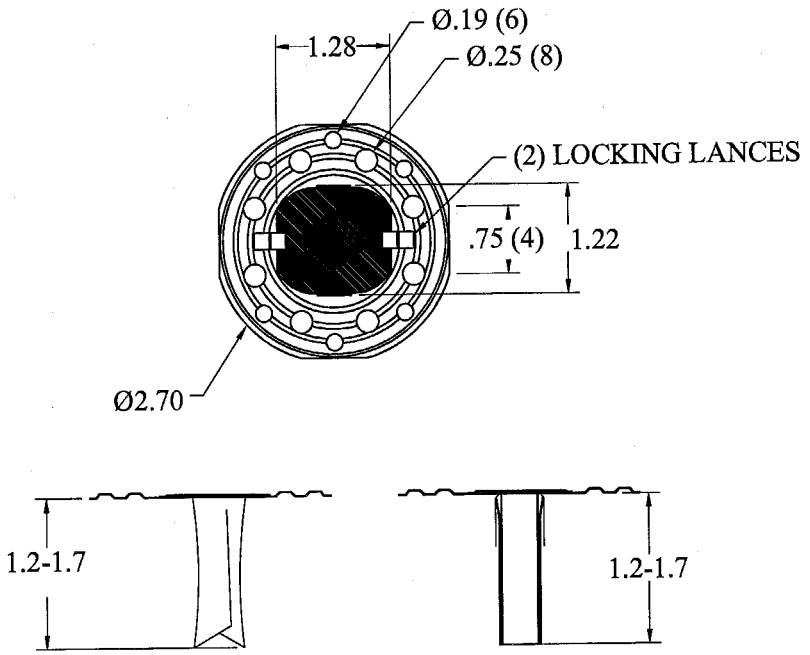


**FM BASE PLY FASTENERS**

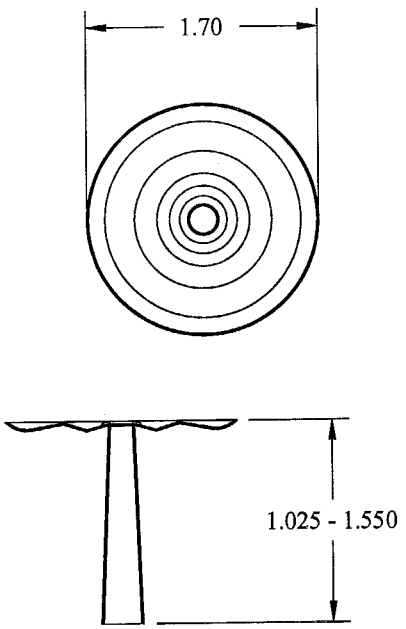


**NAIL-TITE**

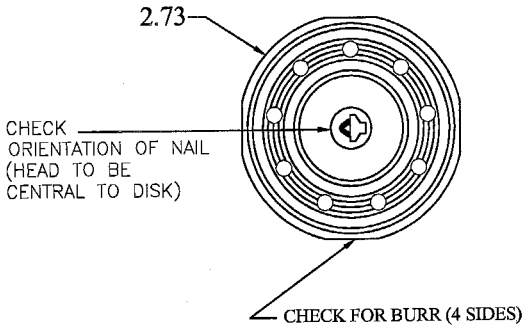


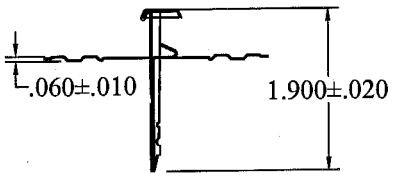


**INSULDECK LOC-NAIL**

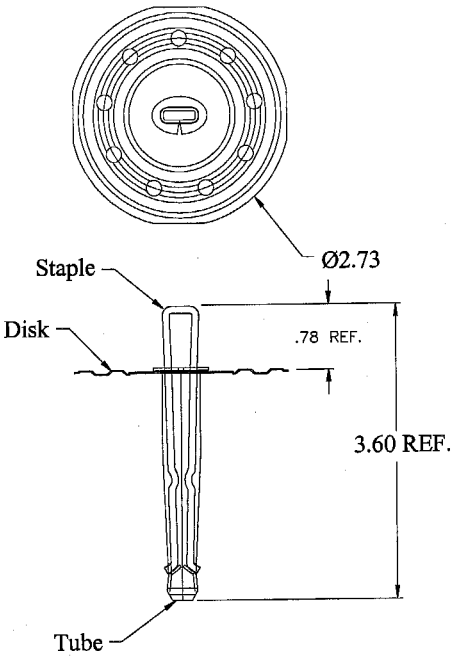


**TWIN LOC-NAIL ASSEMBLY**

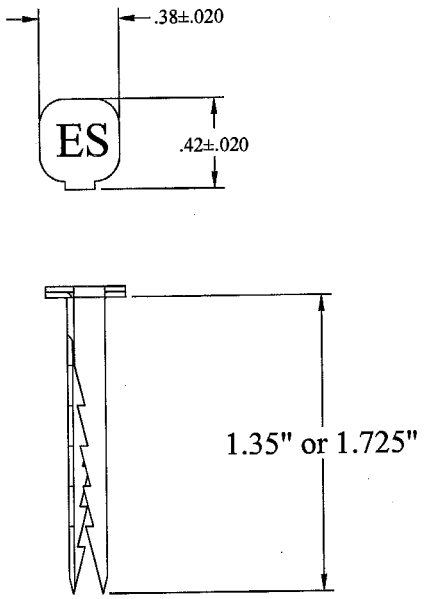


**DO-ALL LOC-NAIL**

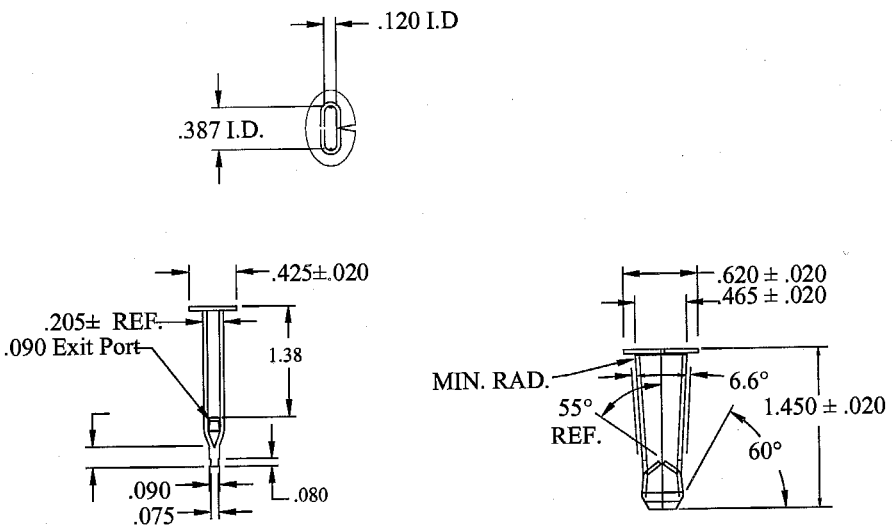


**1.4" TWIN LOC-NAIL SHANK**

**END OF THIS ACCEPTANCE**

**NOTICE OF ACCEPTANCE:EVIDENCE SUBMITTED**

***(For File ONLY. Not part of NOA.)***

| Test Agency | Test Identifier | Test Name/Report | Date |
|---|---|---|---|
| Factory Mutual Research Corporation | Wind Uplift | J.I. 0R0Q1.AM | 03/22/91 |
| Factory Mutual Research Corporation | Wind Uplift | J.I. 1V1A9.AM | 07/12/91 |
| Factory Mutual Research Corporation | Standard 4470 | J.I. 0V8A3.AM | 11/13/91 |
| Factory Mutual Research Corporation | Standard 4470 | J.I. 1V9A8.AM | 02/25/92 |
| Factory Mutual Research Corporation | Wind Uplift | J.I. 0W2A0.AM | 03/19/92 |
| Factory Mutual Research Corporation | Wind Uplift | J.I. 1W5A2.AM | 10/05/92 |
| Factory Mutual Research Corporation | Wind Uplift | J.I. 0W4A1.AM | 01/04/93 |
| Factory Mutual Research Corporation | Corrosion Resistance Testing of Loc-Nails | J.I. 0W4A1.AM | 01/07/93 |
| Factory Mutual Research Corporation | Standard 4470 | J.I. 3W3A5.AM | 01/27/94 |
| Trinity Engineering, Inc. | Dynamic Pull Through TAS 117(B) | #4670.10.95-1 | 10/01/95 |
| Exterior Research & Design, LLC. | TAS 117(A), (B) & (C) | #4670.07.97-1 | 07/20/97 |