MIAMI-DADE

BUILDING CODE COMPLIANCE OFFICE (BCCO)
PRODUCT CONTROL DIVISION

MIAMI-DADE COUNTY, FLORIDA
METRO-DADE FLAGLER BUILDING
140 WEST FLAGLER STREET, SUITE 1603
MIAMI, FLORIDA 33130-1563
(305) 375-2901 FAX (305) 375-2908

NOTICE OF ACCEPTANCE (NOA)

Awning, Shutters & Screens, Inc.
1631 S. Dixie Hwy, Bldg. D -1
Pompano Beach, FL 33060

SCOPE:
This NOA is being issued under the applicable rules and regulations governing the use of construction materials. The documentation submitted has been reviewed by Miami-Dade County Product Control Division and accepted by the Board of Rules and Appeals (BORA) to be used in Miami Dade County and other areas where allowed by the Authority Having Jurisdiction (AHJ).

This NOA shall not be valid after the expiration date stated below. The Miami-Dade County Product Control Division (In Miami Dade County) and/or the AHJ (in areas other than Miami Dade County) reserve the right to have this product or material tested for quality assurance purposes. If this product or material fails to perform in the accepted manner, the manufacturer will incur the expense of such testing and the AHJ may immediately revoke, modify, or suspend the use of such product or material within their jurisdiction. BORA reserves the right to revoke this acceptance, if it is determined by Miami-Dade County Product Control Division that this product or material fails to meet the requirements of the applicable building code.

This product is approved as described herein, and has been designed to comply with the High Velocity Hurricane Zone of the Florida Building Code.

DESCRIPTION: "Big Bertha " Aluminum Accordion Shutter

APPROVAL DOCUMENT: Drawing No. **02-555**, titled "Accordion Shutter ", sheets 1 through 6 of 6, prepared by Tilteco, Inc., dated November 22, 2002, last revision #1 dated November 22, 2002, signed and sealed by Walter A. Tillit Jr., P.E., bearing the Miami-Dade County Product Control Revision stamp with the Notice of Acceptance number and expiration date by the Miami-Dade County Product Control Division.

MISSILE IMPACT RATING: Large and Small Missile Impact

LABELING: Each unit shall bear a permanent label with the manufacturer's name or logo, city, state and the following statement: "Miami-Dade County Product Control Approved", unless otherwise noted herein.

RENEWAL of this NOA shall be considered after a renewal application has been filed and there has been no change in the applicable building code negatively affecting the performance of this product.

TERMINATION of this NOA will occur after the expiration date or if there has been a revision or change in the materials, use, and/or manufacture of the product or process. Misuse of this NOA as an endorsement of any product, for sales, advertising or any other purposes shall automatically terminate this NOA. Failure to comply with any section of this NOA shall be cause for termination and removal of NOA.

ADVERTISEMENT: The NOA number preceded by the words Miami-Dade County, Florida, and followed by the expiration date may be displayed in advertising literature. If any portion of the NOA is displayed, then it shall be done in its entirety.

INSPECTION: A copy of this entire NOA shall be provided to the user by the manufacturer or its distributors and shall be available for inspection at the job site at the request of the Building Official.
This NOA **revises NOA # 01-0813.01** and consists of this page 1 as well as approval document mentioned above.
The submitted documentation was reviewed by **Helmy A. Makar, P.E.**

H.M.
05/01/03

PRODUCT CONTROL ACCEPTED

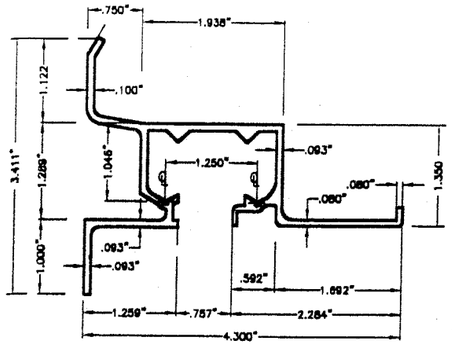

Ⓐ HEADER
SCALE: 1/2" = 1"

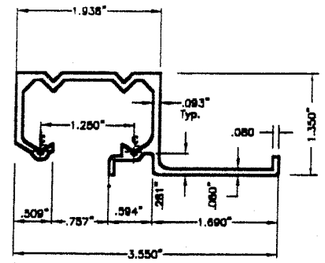

Ⓑ HEADER
SCALE: 1/2" = 1"

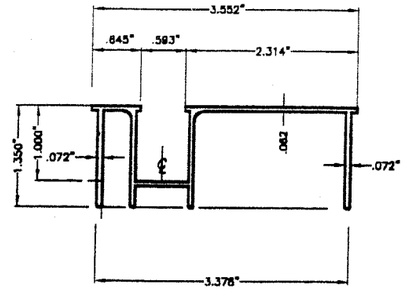

Ⓒ SILL
SCALE: 1/2" = 1"

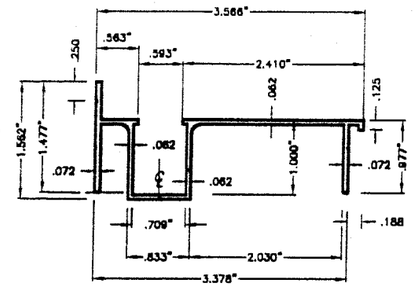

Ⓒ1 SILL
SCALE: FULL

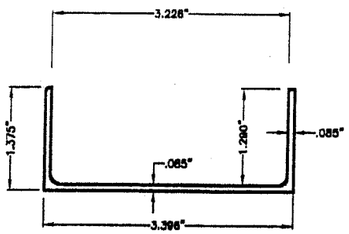

Ⓓ SILL ADAPTOR
SCALE: 1/2" = 1"

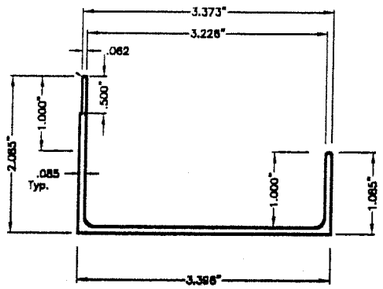

Ⓓ1 SILL ADAPTOR
SCALE: FULL

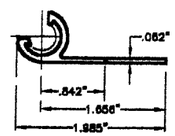

Ⓕ 180° STARTER
SCALE: 1/2" = 1"

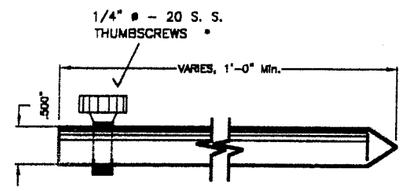

Ⓖ LOCKING PIN
SCALE: 1/2" = 1"

* THUMBSCREWS CAN ALSO BE FLAT HEAD TYPE.

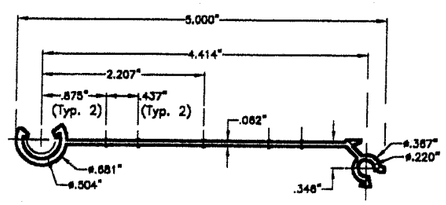

Ⓗ BLADE
SCALE: 1/2" = 1"

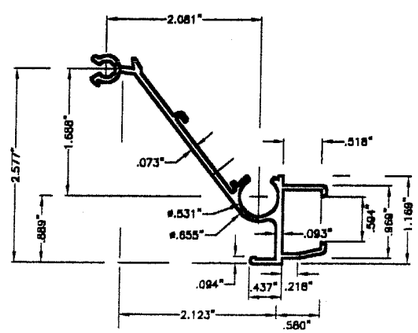

Ⓘ MALE LOCK SLAT
SCALE: 1/2" = 1"

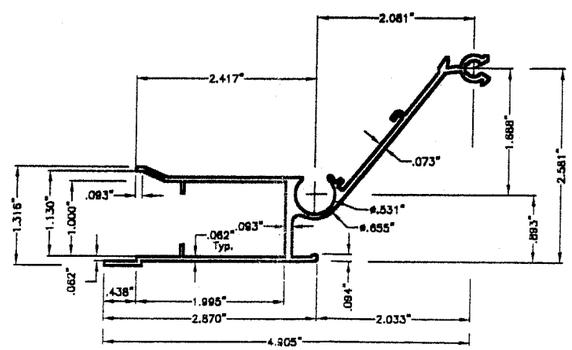

Ⓙ FEMALE LOCK SLAT
SCALE: 1/2" = 1"

COMPONENTS

GENERAL NOTES:

1. ACCORDION SHUTTER SHOWN ON THIS PRODUCT APPROVAL DOCUMENT (P.A.D.) HAS BEEN DESIGNED IN ACCORDANCE WITH THE 2001 EDITION OF THE FLORIDA BUILDING CODE.
DESIGN WIND LOADS SHALL BE DETERMINED AS PER SECTION 1619 OF THE ABOVE MENTIONED CODE, FOR A BASIC WIND SPEED OF 146 m.p.h., AND IN ACCORDANCE W/ ASCE 7-98 STANDARD.
ACCORDION SHUTTER'S ADEQUACY FOR IMPACT AND FATIGUE RESISTANCE HAS BEEN VERIFIED IN ACCORDANCE WITH SECTION 1606.1.4 OF THE ABOVE MENTIONED CODE.

2. STAINLESS STEEL SHEET METAL SCREWS USED AT LOUVER PIN SHALL BE # 14 x 3", TYPE B, 410-H MINIMUM SERIES. SCREWS SHALL BE COATED WITH XYLAN 5000 SERIES FLUOROPOLYMER COATINGS AS MANUFACTURED BY WHITFORD Co., BOX 507, WEST CHESTER PA. 19381.

3. ALL ALUMINUM EXTRUSIONS SHALL BE 6063-T6 ALLOY (UNLESS OTHERWISE NOTED).

4. ALL SCREWS TO BE STAINLESS STEEL 304 OR 316 SERIES W/ 50 ksi YIELD POINT AND 90 ksi TENSILE STRENGTH.

5. ALL ALUMINUM POP RIVETS TO BE 5052 ALUMINUM ALLOY WITH ALUMINUM MANDREL.

6. BOLTS TO BE 2024-T4 ALUMINUM ALLOY GALVANIZED OR STAINLESS STEEL WITH 35 ksi MINIMUM YIELD POINT.

7. ANCHORS TO WALL SHALL BE AS FOLLOWS: (UNLESS OTHERWISE NOTED)
(A) TO EXISTING POURED CONCRETE:

- 1/4" ø TAPCON, AS MANUFACTURED BY I.T.W. BUILDEX OR ELCO TEXTRON.
- 1/4" ø ZAMAC NAILIN ANCHORS, AS MANUFACTURED BY POWERS FASTENING, INC.
- 1/4" ø x 7/8" CALK-IN ANCHOR AS MANUFACTURED BY POWERS FASTENING, INC.

NOTES:
A.1) MINIMUM EMBEDMENT OF TAPCON ANCHORS INTO CONCRETE IS 1 3/4" AND ZAMAC NAILIN IS 1 3/8".
A.2) 7/8" CALK-IN ANCHORS SHALL BE ENTIRELY EMBEDDED INTO THE POURED CONCRETE. NO EMBEDMENT INTO STUCCO SHALL BE PERMITTED. 1/4" ø-20 SCREWS USED SHALL BE 1 1/2" LONG MINIMUM SHOULD STUCCO EXIST.
A.3) IN CASE THAT PRECAST STONE, PRECAST CONCRETE PANELS, OR PAVERS BE FOUND ON THE EXISTING WALL OR FLOOR, ANCHORS SHALL BE LONG ENOUGH TO REACH THE MAIN STRUCTURE BEHIND SUCH PANELS. ANCHORAGE SHALL BE AS INDICATED ON NOTES A.1 & A.2 ABOVE.

(B) TO EXISTING CONCRETE BLOCK WALL:

- 1/4" ø TAPCON, AS MANUFACTURED BY I.T.W. BUILDEX OR ELCO TEXTRON.
- 1/4" ø ZAMAC NAILIN ANCHORS, AS MANUFACTURED BY POWERS FASTENING, INC.
- 1/4" ø x 7/8" CALK-IN ANCHORS AS MANUFACTURED BY POWERS FASTENING, INC.

NOTES:
B.1) MINIMUM EMBEDMENT OF TAPCON ANCHORS INTO THE CONCRETE BLOCK UNIT SHALL BE 1 1/4".
B.2) 7/8" CALK-IN ANCHORS SHALL BE ENTIRELY EMBEDDED INTO THE CONCRETE BLOCK UNIT. NO EMBEDMENT INTO STUCCO SHALL BE PERMITTED. 1/4" ø-20 SCREWS USED SHALL BE 1 1/2" LONG MINIMUM SHOULD STUCCO EXIST AND 1" MINIMUM FOR WALLS WITH NO STUCCO.
B.3) IN CASE THAT PRECAST STONE OR PRECAST CONCRETE PANELS BE FOUND ON THE EXISTING WALL, ANCHORS SHALL BE LONG ENOUGH TO REACH THE MAIN STRUCTURE BEHIND SUCH PANELS. ANCHORAGE SHALL BE 1 1/4" MINIMUM FOR ANCHORS MENTIONED IN B.1.), & 7/8" FOR ANCHORS MENTIONED IN B.2.).
(C) ANCHORS SHALL BE INSTALLED FOLLOWING ALL OF THE RECOMMENDATIONS AND SPECIFICATIONS OF THE ANCHOR'S MANUFACTURER.

8. BLADE Ⓗ, AND THE KNUCKLES FOR CENTERMATES Ⓘ & Ⓙ, AND STARTER Ⓕ ARE UNDER THE PATENT OF EASTERN METALS.

9. IT SHALL BE THE RESPONSIBILITY OF THE CONTRACTOR TO VERIFY THE SOUNDNESS OF THE STRUCTURE WHERE SHUTTER IS TO BE ATTACHED TO INSURE PROPER ANCHORAGE. THIS SHUTTER SHALL ONLY BE ATTACHED TO CONCRETE, BLOCK OR WOOD FRAME BUILDINGS.

10. (A) THIS PRODUCT APPROVAL DOCUMENT (P.A.D.) PREPARED BY THIS ENGINEER IS GENERIC AND DOES NOT PROVIDE INFORMATION FOR A SITE SPECIFIC PROJECT; i.e. WHERE THE SITE CONDITIONS DEVIATE FROM THE P.A.D.

(B) CONTRACTOR TO BE RESPONSIBLE FOR THE SELECTION, PURCHASE AND INSTALLATION OF THIS PRODUCT BASED ON THIS PRODUCT APPROVAL PROVIDED HE/SHE DOES NOT DEVIATE FROM THE CONDITIONS DETAILED ON THIS DOCUMENT.

(C) THIS PRODUCT APPROVAL DOCUMENT WILL BE CONSIDERED INVALID IF MODIFIED.

(D) SITE SPECIFIC PROJECTS SHALL BE PREPARED BY A FLORIDA REGISTERED ENGINEER OR ARCHITECT WHICH WILL BECOME THE PROFESSIONAL OF RECORD (P.O.R.) FOR THE PROJECT AND WHO WILL BE RESPONSIBLE FOR THE PROPER USE OF THE P.A.D. PROFESSIONAL OF RECORD, ACTING AS DELEGATED ENGINEER TO THE P.A.D. ENGINEER, SHALL SUBMIT TO THIS LATTER THE SITE SPECIFIC DRAWINGS FOR REVIEW.

(E) THIS P.A.D. SHALL BEAR THE DATE AND ORIGINAL SEAL AND SIGNATURE OF THE PROFESSIONAL ENGINEER THAT PREPARED IT.

11. SHUTTER'S MANUFACTURER STAMP SHALL BE PLACED ON THE EXPOSED SURFACE OF THE FEMALE LOCK SLAT (COMPONENT Ⓙ).
ONE LABEL SHALL BE PLACED FOR EVERY OPENING.
LABEL SHALL READ AS FOLLOWS:
AWNINGS, SHUTTERS & SCREENS, INC.
POMPANO BEACH, FLORIDA
"MIAMI-DADE COUNTY PRODUCT CONTROL APPROVED"

PRODUCT REVISED
as complying with the Florida Buiding Code
Acceptance No 03-0116.11
Expiration Date 08/10/2006
By Helena A. Nelson
Miami Dade Product Control Division

F.B.C. (H.V.H.Z.) / MIAMI-DADE COUNTY

TILTECO INC.
TILLIT TESTING & ENGINEERING COMPANY
8595 N.W. 38th. St., Ste. 217, VIRGINIA GARDENS, FLORIDA 33166
Phone : (305)671-1530 , Fax : (305)671-1531
EB-0006719
WALTER A. TILLIT Jr., P. E.
FLORIDA Lic. # 44167

ACCORDION SHUTTER

AWNINGS, SHUTTERS & SCREENS, INC.
1631 S. DIXIE HWY. BLDG D-1
POMPANO BEACH, FLORIDA 33060

REV. NO	DESCRIPTION	DATE	REV. No	DESCRIPTION	DATE
1	OLD DWG 99-278	11/22/02	3		
2	–	–	4		

SCALE: –
DATE: 11/22/02
DRAWING No: 02 – 555
SHEET 1 OF 6

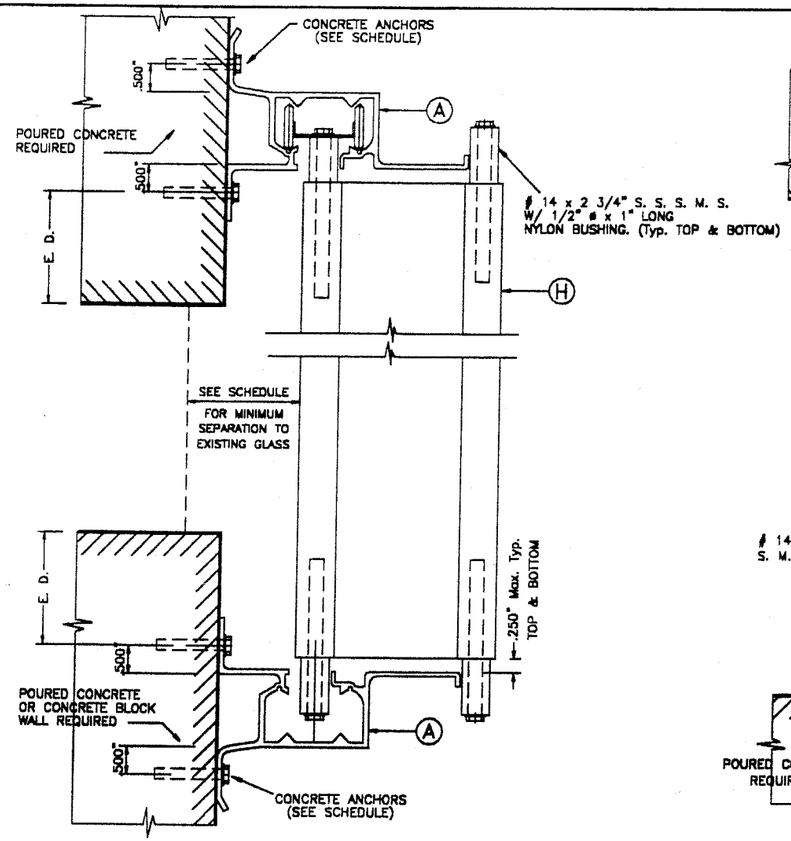

WALL MOUNTING INSTALLATION – SECTION A

SCALE: 3/8" = 1"

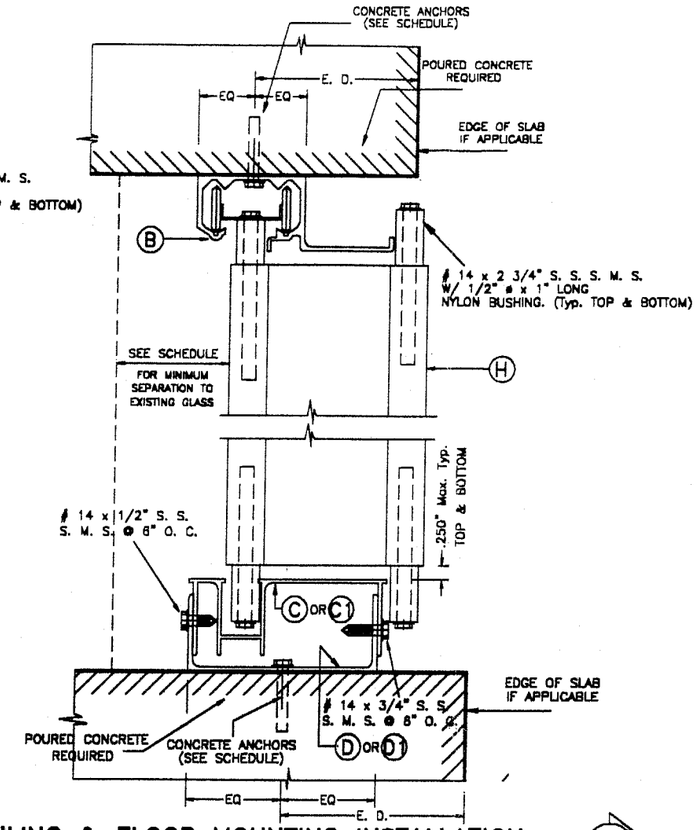

CEILING & FLOOR MOUNTING INSTALLATION – SECTION B

SCALE: 3/8" = 1"

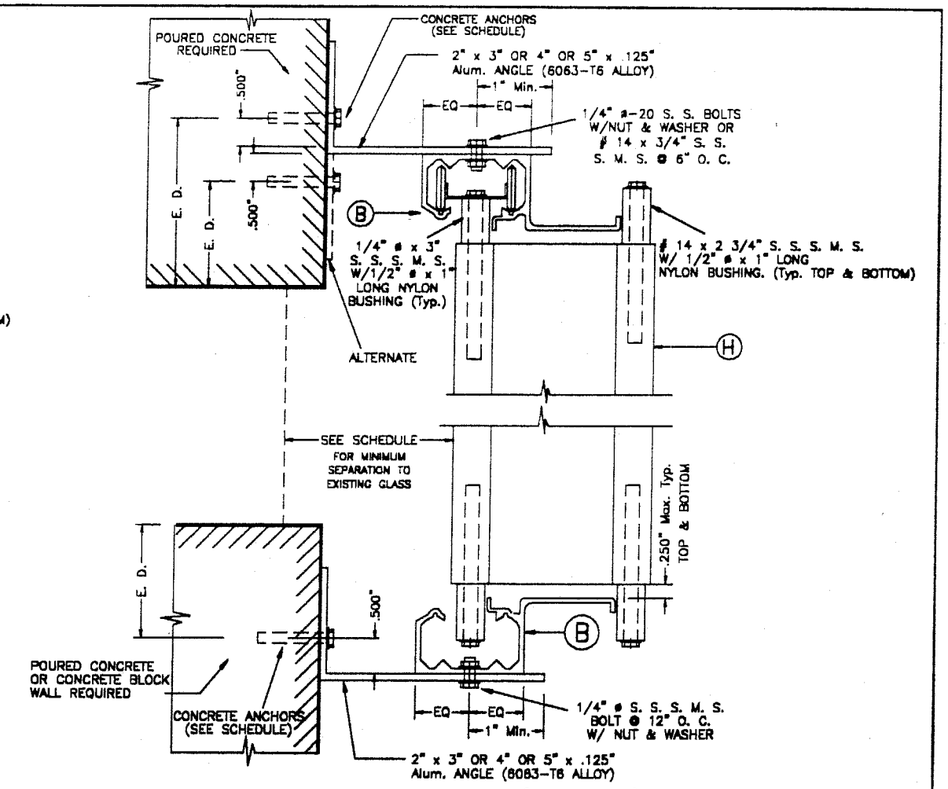

WALL MOUNTING INSTALLATION (OFFSET) – SECTION C

SCALE: 3/8" = 1

INSTALLATION DETAILS

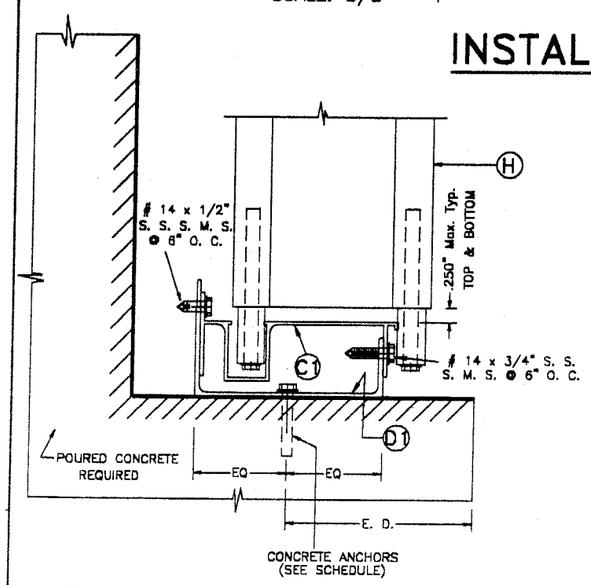

ALTERNATE FLOOR MOUNT. INSTALLAT. – SECTION B1

SCALE: 3/8" = 1"

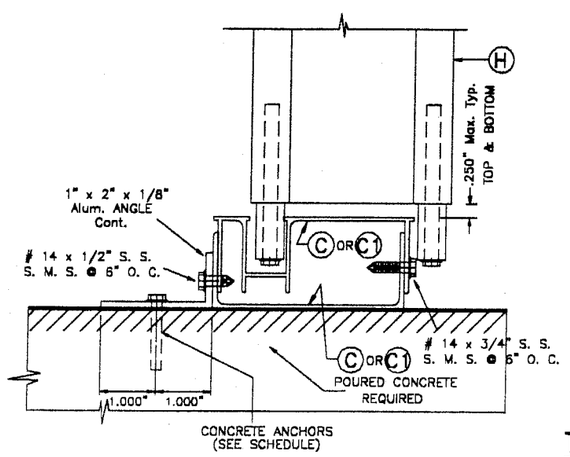

REMOVABLE FLOOR MOUNTING INSTALLATION – SECTION B2

SCALE: 3/8" = 1"

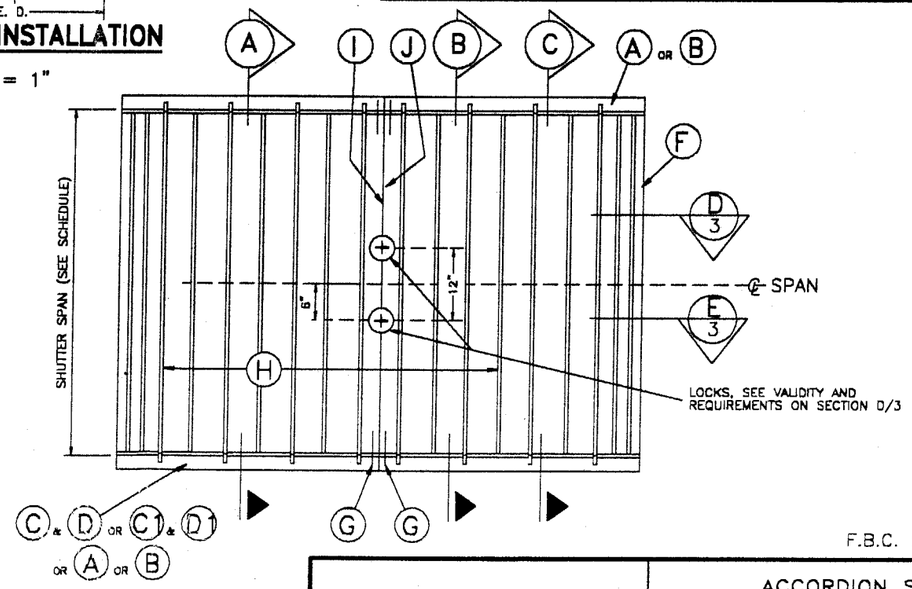

TYPICAL ELEVATION

N. T. S.

PRODUCT REVISED
as complying with the Florida Building Code
Acceptance No 03-0116.11
Expiration Date 03/10/2006
By Helena A. Nolan
Miami Dade Product Control Division

F.B.C. (H.V.H.Z.) / MIAMI-DADE COUNTY

TILTECO INC.
TILLIT TESTING & ENGINEERING COMPANY
6595 N.W. 36th. St., Ste. 217, VIRGINIA GARDENS, FLORIDA 33166
Phone : (305)871-1530 . Fax : (305)871-1531
EB-0006719
WALTER A. TILLIT Jr., P. E.
FLORIDA Lic. # 44167

ACCORDION SHUTTER

AWNINGS, SHUTTERS & SCREENS, INC.
1631 S. DIXIE HWY. BLDG D-1
POMPANO BEACH, FLORIDA 33060

REV. NO	DESCRIPTION	DATE	REV. No	DESCRIPTION	DATE
1	OLD DWG 99-278	11/22/02	3		
2	–	–	4		

SCALE: –
DATE: 11/22/02
DRAWING No: 02 – 555
SHEET 2 OF 6

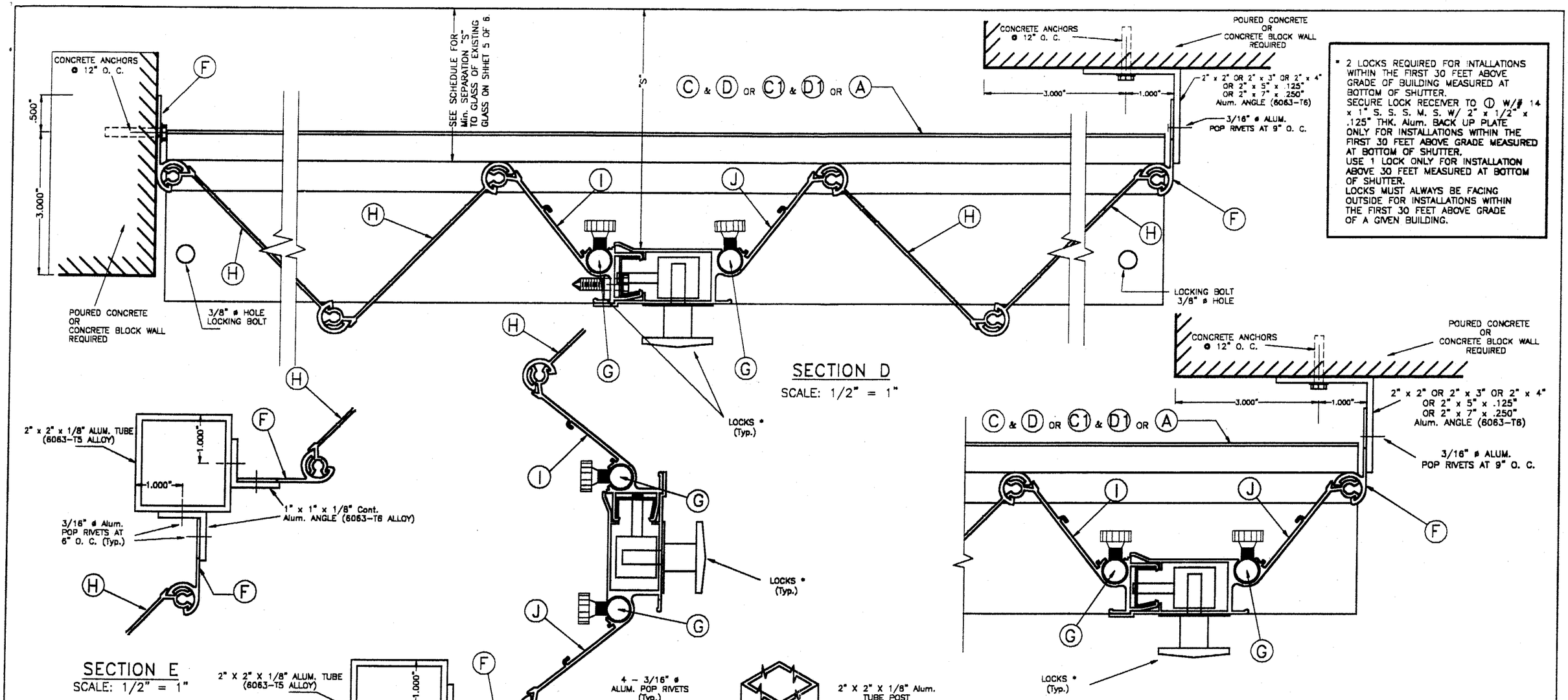

* 2 LOCKS REQUIRED FOR INTALLATIONS WITHIN THE FIRST 30 FEET ABOVE GRADE OF BUILDING MEASURED AT BOTTOM OF SHUTTER.
SECURE LOCK RECEIVER TO ① W/# 14 x 1" S. S. S. M. S. W/ 2" x 1/2" x .125" THK. Alum. BACK UP PLATE ONLY FOR INSTALLATIONS WITHIN THE FIRST 30 FEET ABOVE GRADE MEASURED AT BOTTOM OF SHUTTER.
USE 1 LOCK ONLY FOR INSTALLATION ABOVE 30 FEET MEASURED AT BOTTOM OF SHUTTER.
LOCKS MUST ALWAYS BE FACING OUTSIDE FOR INSTALLATIONS WITHIN THE FIRST 30 FEET ABOVE GRADE OF A GIVEN BUILDING.

SECTION D
SCALE: 1/2" = 1"

SECTION E
SCALE: 1/2" = 1"

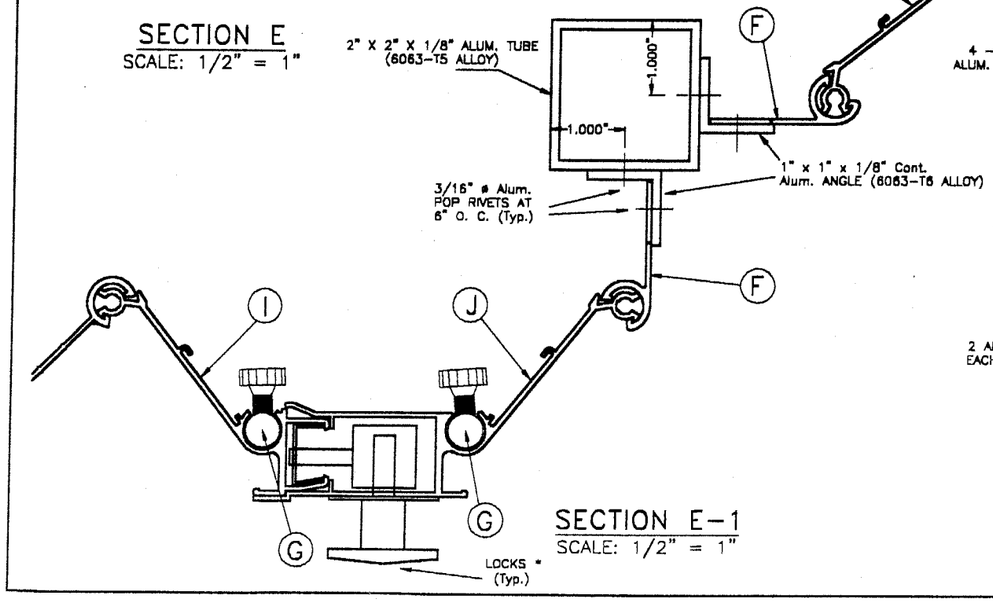

SECTION E-1
SCALE: 1/2" = 1"

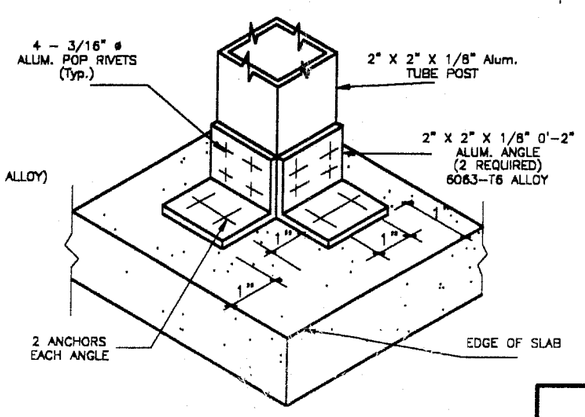

ISOMETRIC
(CORNER POST) (Typ. AT TOP & BOTTOM SLABS)

ONE SIDED SHUTTER: END CONNECTION DETAIL
SCALE: 1/2" = 1"

PRODUCT REVISED
as complying with the Florida Buiding Code
Acceptance No 03-0116.11
Expiration Date 08/10/2006
By Helmy A. Hatem
Miami Dade Product Control Division

F.B.C. (H.V.H.Z.) / MIAMI-DADE COUNTY

TILTECO INC.
TILLIT TESTING & ENGINEERING COMPANY
6595 N.W. 36th. St., Ste. 217, VIRGINIA GARDENS, FLORIDA 33166
Phone : (305)871-1530 . Fax : (305)871-1531
EB-0006719
WALTER A. TILLIT Jr., P. E.
FLORIDA Lic. # 44167

ACCORDION SHUTTER

AWNINGS, SHUTTERS & SCREENS, INC.
1631 S. DIXIE HWY. BLDG D-1
POMPANO BEACH, FLORIDA 33060

REV. NO	DESCRIPTION	DATE	REV. No	DESCRIPTION	DATE
1	OLD DWG 99-278	11/22/02	3		
2	-	-	4		

SCALE: -
DATE: 11/22/02
DRAWING No: 02 - 555
SHEET 3 OF 6

NOTES:

1. INSTALLATIONS ARE ONLY VALID FOR BUILDINGS WITH DESIGN LOADS UP TO 75 p.s.f. AND 8'-0" Max. SHUTTER SPAN.
2. NEW 2" x 6" P. T. TO BE SOUTHERN PINE No. 2, SURFACED DRY WITH 19 % M. M. C. W/ SPECIFIC DENSITY OF 0.55.
3. FOR NEW WOOD FRAME CONSTRUCTION: WOOD MEMBERS TO BE SOUTHERN PINE No. 2, W/ SPECIFIC DENSITY OF 0.55 OR EQUAL.

INSTALLATION DETAILS ON EXISTING WOOD BUILDINGS

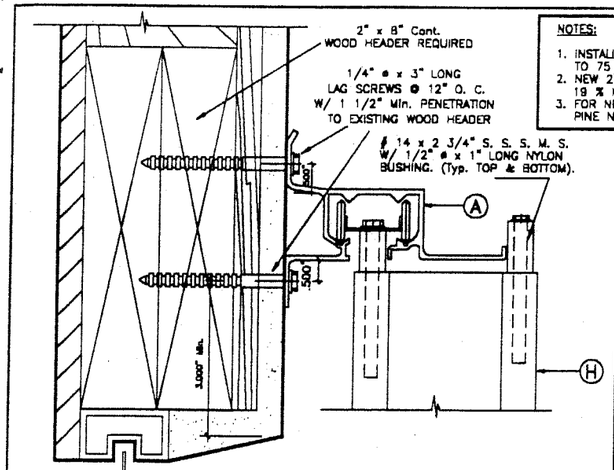

WALL MOUNTING INSTALLATION

– SECTION A

SCALE: 3/4" = 1"

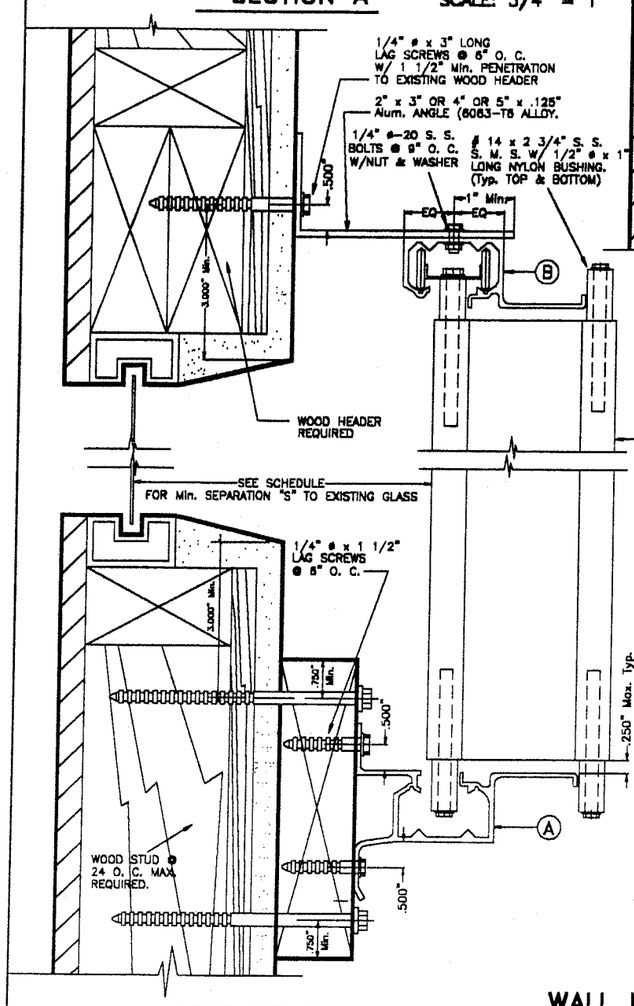

ALTERNATIVE 2

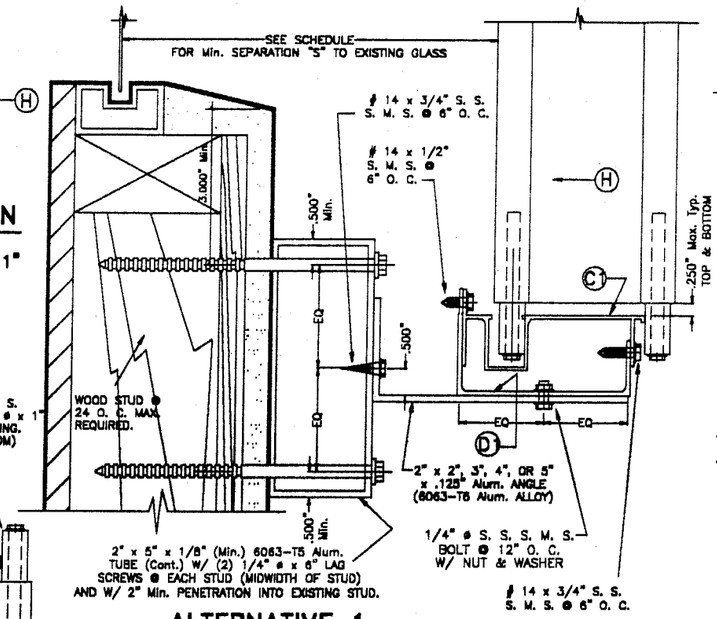

ALTERNATIVE 1

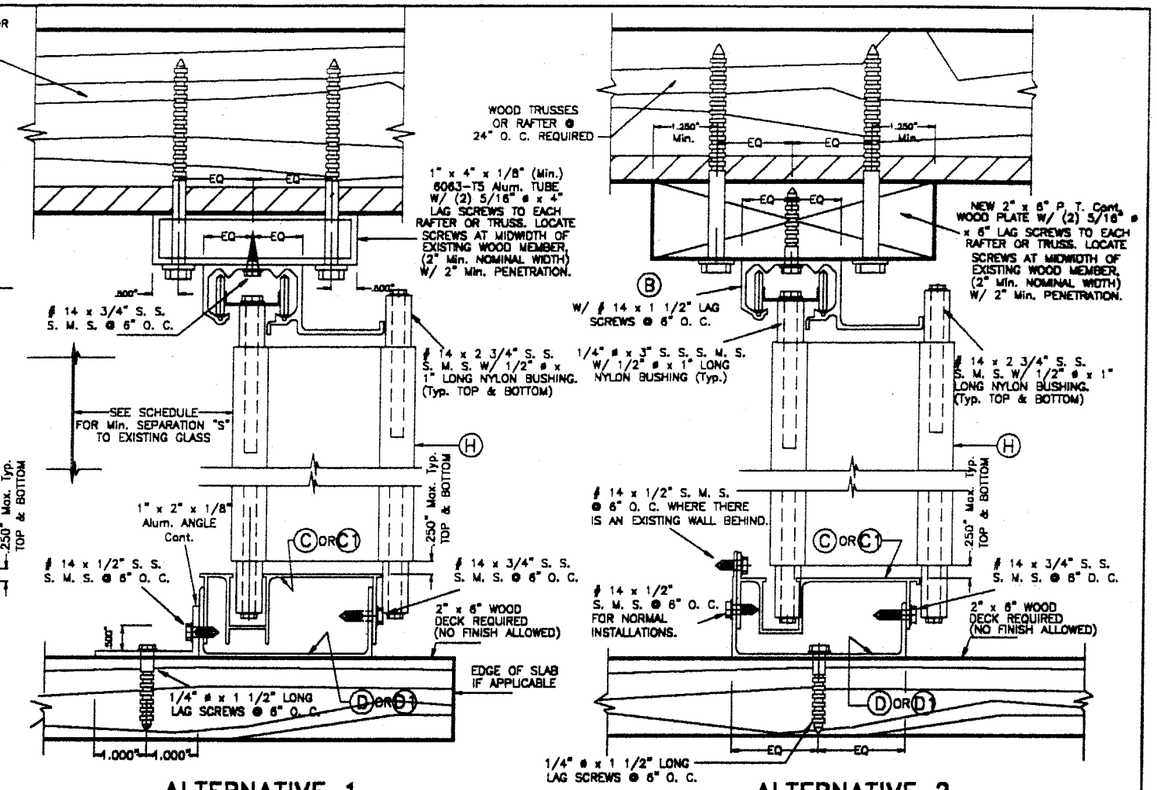

ALTERNATIVE 1 ALTERNATIVE 2

CEILING & FLOOR MOUNTING INSTALLATION

– SECTION B

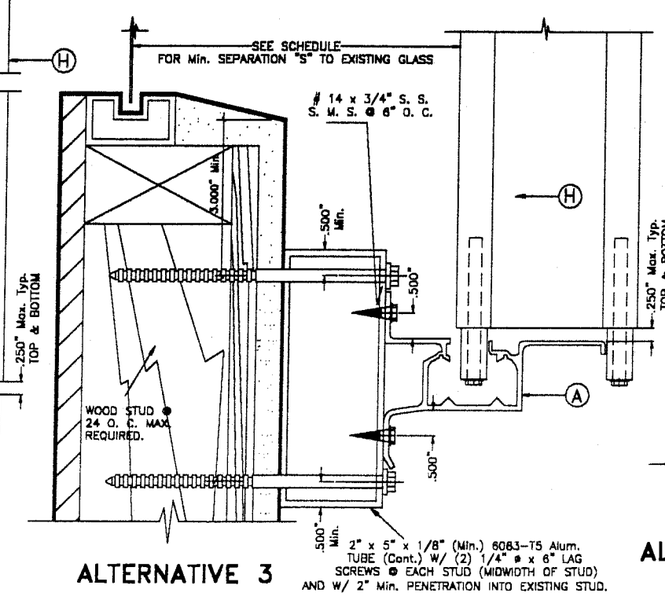

ALTERNATIVE 3

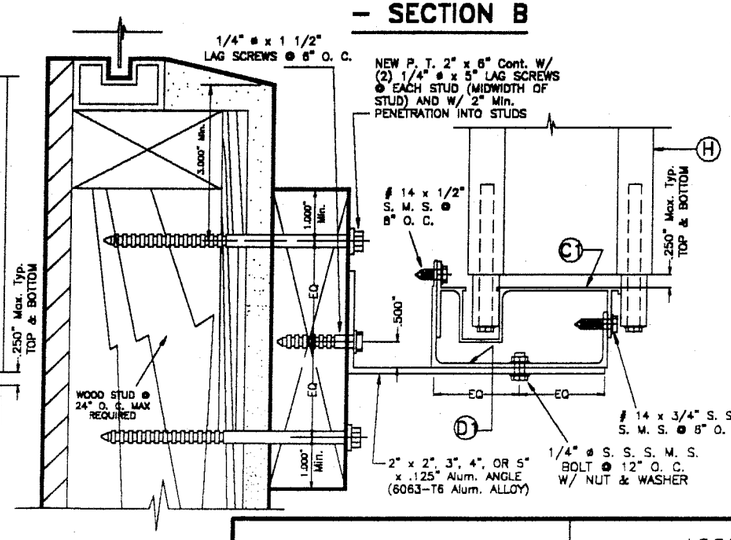

ALTERNATIVE 4

WALL MOUNTING INSTALLATION (OFFSET) – SECTION A1

ALTERNATIVE 2

12/19/02

PRODUCT REVISED as complying with the Florida Buiding Code
Acceptance No 03-0116.11
Expiration Date 08/10/2006
By Helmy A. Mellor
Miami Dade Product Control Division

F.B.C. (H.V.H.Z.) / MIAMI-DADE COUNTY

TILTECO INC.
TILLIT TESTING & ENGINEERING COMPANY
8595 N.W. 36th. St., Ste. 217, VIRGINIA GARDENS, FLORIDA 33166
Phone : (305)871-1530 , Fax : (305)871-1531
EB-0006719
WALTER A. TILLIT Jr., P. E.
FLORIDA Lic. # 44167

ACCORDION SHUTTER

AWNINGS, SHUTTERS & SCREENS, INC.
1631 S. DIXIE HWY. BLDG D-1
POMPANO BEACH, FLORIDA 33060

REV. NO	DESCRIPTION	DATE	REV. No	DESCRIPTION	DATE
1	OLD DWG 98-278	11/22/02	3		
2	–	–	4		

SCALE –
DATE 11/22/02
DRAWING No 02 – 555
SHEET 4 OF 6

MAXIMUM DESIGN PRESSURE RATING "W" (p.s.f.) AND CORRESPONDING MAXIMUM SPAN "L" SCHEDULE.

NOTE: DESIGN PRESSURE RATING CORRESPONDS ONLY TO NEGATIVE PRESSURE (SUCTION) LOADS, IN ACCORDANCE WITH ASCE 7-98 CRITERIA FOR A GIVEN OPENING. IF NEGATIVE PRESSURE VALUES COMPLY WITH THE REQUIRED PRESSURE FOR THE OPENING, THE POSITIVE PRESSURE WILL AUTOMATICALLY QUALIFY AND NEED NOT TO BE CHECKED.

MAXIMUM DESIGN LOAD W (p.s.f.)	MAXIMUM PANEL SPAN L (ft.)		MINIMUM SEPARATION "S" TO GLASS (in.)	
	*	**	*	**
45.1	15'-7"	10'-11"	3"	2"
47.8	15'-1"	10'-9"	3"	2"
49.0	14'-11"	10'-8"	2 7/8"	2"
50.5	14'-8"	10'-7"	2 7/8"	2"
52.0	14'-6"	10'-6"	2 7/8"	2"
52.4	14'-5"	10'-6"	2 7/8"	2"
55.0	14'-1"	10'-5"	2 7/8"	2"
55.2	14'-1"	10'-5"	2 7/8"	2"
55.6	14'-0"	10'-5"	2 3/4"	2"
57.2	13'-10"	10'-4"	2 3/4"	2"
58.6	13'-8"	10'-3"	2 3/4"	2"
58.8	13'-8"	10'-3"	2 3/4"	2"
59.5	13'-7"	10'-2"	2 3/4"	2"
59.7	13'-6"	10'-2"	2 3/4"	2"
61.5	13'-4"	10'-2"	2 3/4"	2"
61.8	13'-4"	10'-1"	2 3/4"	2"
61.9	13'-3"	10'-1"	2 3/4"	2"
63.4	13'-1"	10'-1"	2 3/4"	2"
63.6	13'-1"	10'-0"	2 3/4"	2"
63.7	13'-1"	10'-0"	2 3/4"	2"
66.9	12'-9"	10'-0"	2 5/8"	2"
67.0	12'-9"	9'-11"	2 5/8"	2"
67.5	12'-9"	9'-11"	2 5/8"	2"
70.1	12'-6"	9'-10"	2 5/8"	2"
71.1	12'-5"	9'-9"	2 5/8"	2"
71.4	12'-4"	9'-9"	2 5/8"	2"
71.5	12'-4"	9'-9"	2 5/8"	2"
72.9	12'-3"	9'-8"	2 5/8"	2"
75.1	12'-1"	9'-8"	2 5/8"	2"
75.2	12'-1"	9'-8"	2 5/8"	2"
75.3	12'-0"	9'-7"	2 1/2"	2"
77.0	11'-11"	9'-7"	2 1/2"	2"
77.5	11'-10"	9'-7"	2 1/2"	2"
78.8	11'-9"	9'-6"	2 1/2"	2"
80.7	11'-8"	9'-6"	2 1/2"	2"
81.5	11'-7"	9'-5"	2 1/2"	2"
82.5	11'-6"	9'-5"	2 1/2"	2"
83.4	11'-5"	9'-5"	2 1/2"	2"
86.2	11'-3"	9'-4"	2 1/2"	2"
86.7	11'-3"	9'-3"	2 1/2"	2"

MAXIMUM DESIGN LOAD W (p.s.f.)	MAXIMUM PANEL SPAN L (ft.)		MINIMUM SEPARATION "S" TO GLASS (in.)	
	*	**	*	**
86.8	11'-3"	9'-3"	2 1/2"	2"
88.5	11'-1"	9'-3"	2 1/2"	2"
90.3	11'-0"	9'-2"	2 3/8"	2"
90.8	11'-0"	9'-2"	2 3/8"	2"
91.4	10'-11"	9'-2"	2 3/8"	2"
92.7	10'-10"	9'-2"	2 3/8"	2"
93.8	10'-10"	9'-1"	2 3/8"	2"
94.5	10'-9"	9'-1"	2 3/8"	2"
96.6	10'-8"	9'-1"	2 3/8"	2"
96.8	10'-7"	9'-0"	2 3/8"	2"
97.7	10'-7"	9'-0"	2 3/8"	2"
100.5	10'-5"	8'-11"	2 3/8"	2"
101.5	10'-5"	8'-11"	2 3/8"	2"
103.7	10'-3"	8'-11"	2 3/8"	2"
106.5	10'-2"	8'-10"	2 3/8"	2"
108.8	10'-0"	8'-9"	2 3/16"	2"
110.6	9'-11"	8'-9"	2 3/16"	2"
111.0	9'-11"	8'-9"	2 3/16"	2"
114.1	9'-9"	8'-8"	2 3/16"	2"
116.5	9'-8"	8'-8"	2 3/16"	2"
116.9	9'-8"	8'-7"	2 3/16"	2"
117.6	9'-8"	8'-7"	2 3/16"	2"
119.7	9'-7"	8'-7"	2 3/16"	2"
121.2	9'-6"	8'-7"	2 3/16"	2"
122.5	9'-5"	8'-6"	2 3/16"	2"
125.3	9'-4"	8'-6"	2 3/16"	2"
125.8	9'-4"	8'-6"	2 3/16"	2"
126.7	9'-3"	8'-5"	2 3/16"	2"
129.6	9'-2"	8'-5"	2 3/16"	2"
130.9	9'-2"	8'-5"	2 3/16"	2"
131.6	9'-1"	8'-4"	2 3/16"	2"
134.3	9'-0"	8'-4"	2 1/16"	2"
136.2	9'-0"	8'-4"	2 1/16"	2"
137.9	8'-11"	8'-3"	2 1/16"	2"
140.7	8'-10"	8'-3"	2 1/16"	2"
142.8	8'-9"	8'-2"	2"	2"
143.5	8'-9"	8'-2"	2"	2"
147.0	8'-7"	8'-2"	2"	2"
148.4	8'-7"	8'-1"	2"	2"
152.6	8'-6"	8'-1"	2"	2"

MAXIMUM DESIGN LOAD W (p.s.f.)	MAXIMUM PANEL SPAN L (ft.)		MINIMUM SEPARATION "S" TO GLASS (in.)	
	*	**	*	**
153.1	8'-5"	8'-1"	2"	2"
156.8	8'-4"	8'-0"	2"	2"
157.5	8'-4"	8'-0"	2"	2"
157.8	8'-4"	8'-0"	2"	2"
160.6	8'-3"	8'-0"	2"	2"
161.7	8'-3"	7'-11"	2"	2"
164.4	8'-2"	7'-11"	2"	2"
165.2	8'-1"	7'-11"	2"	2"
168.1	8'-1"	7'-10"	2"	2"
168.7	8'-1"	7'-10"	2"	2"
170.0	8'-0"	7'-10"	2"	2"
175.6	7'-9"	7'-9"	2"	2"

MAXIMUM DESIGN LOAD W (p.s.f.)	MAXIMUM PANEL SPAN L (ft.)		MINIMUM SEPARATION "S" TO GLASS (in.)	
	*	**	*	**
176.6	7'-8"	7'-8"	2"	2"
180.3	7'-6"	7'-6"	2"	2"
185.0	7'-4"	7'-4"	2"	2"
188.0	7'-2"	7'-2"	2"	2"
192.5	7'-0"	7'-0"	2"	2"
197.2	6'-10"	6'-10"	2"	2"
199.1	6'-10"	6'-10"	2"	2"
204.7	6'-7"	6'-7"	2"	2"
211.3	6'-5"	6'-5"	2"	2"
216.9	6'-3"	6'-3"	2"	2"
221.6	6'-1"	6'-1"	2"	2"
226.3	6'-0"	6'-0"	2"	2"

* FOR SHUTTERS INSTALLED WITHIN THE FIRST 30'-0" ELEVATION OF BUILDING, SEE TABLE 1 FOR MINIMUM SEPARATION FOR SPANS LESS THAN THE MAXIMUM ALLOWED.

** FOR SHUTTERS INSTALLED ABOVE 30'-0" ELEVATION OF BUILDING, MESUARED AT BOTTOM OF SHUTTER.

TABLE 1:

MINIMUM SEPARATION BETWEEN GLASS & BACK OF SHUTTER FOR A GIVEN SHUTTER SPAN "L", FOR SHUTTERS INSTALLED WITHIN THE FIRST 30'-0" ABOVE GRADE OF A GIVEN BUILDING. 30'-0" ELEVATION SHALL BE MESUARED AT BOTTOM OF SHUTTER.

SHUTTER SPAN "L" (ft.)	MINIMUM SEPARATION "S" (in.)
< 8'-9"	2"
>8'-9" TO 9'-0"	2 1/16"
>9'-0" TO 10'-0"	2 3/16"
>10'-0" TO 11'-0"	2 3/8"
>11'-0" TO 12'-0"	2 1/2"
>12'-0" TO 13'-0"	2 5/8"
>13'-0" TO 14'-0"	2 3/4"
>14'-0" TO 15'-0"	2 7/8"
>15'-0" TO 15'-7"	3"

PRODUCT REVISED
as complying with the Florida Buiding Code
Acceptance No 03-0116.11
Expiration Date 08/10/2006
By Helena A. Melo
Miami Dade Product Control Division

F.B.C. (H.V.H.Z.) / MIAMI-DADE COUNTY

TILLECO INC.
TILLIT TESTING & ENGINEERING COMPANY
8595 N.W. 36th. St., Ste. 217, VIRGINIA GARDENS, FLORIDA 33166
Phone : (305)871-1530 . Fax : (305)871-1531
EB-0006719
WALTER A. TILLIT Jr., P. E.
FLORIDA Lic. # 44167

12/1/02

ACCORDION SHUTTER

AWNINGS, SHUTTERS & SCREENS, INC.
1631 S. DIXIE HWY. BLDG D-1
POMPANO BEACH, FLORIDA 33060

REV. NO	DESCRIPTION	DATE	REV. No	DESCRIPTION	DATE
1	OLD DWG 99-278	11/22/02	3		
2	-	-	4		

SCALE: -
DATE: 11/22/02
DRAWING No: 02 - 555
SHEET 5 OF 6

MAXIMUM DESIGN PRESSURE RATING "W" (p.s.f.) AND CORRESPONDING MAXIMUM ANCHOR SPACING (in.) SCHEDULE. **

E. D. = EDGE DISTANCE

MAXIMUM DESIGN LOAD W (p.s.f.)	MAXIMUM ANCHOR SPACING FOR E. D. = 3 1/2" ***								
	WALL MOUNTING INSTALLATION AT TOP (TO CONCRETE)			WALL MOUNTING INSTALLATION AT BOTTOM (TO MASONRY)			CEILING MOUNTING INSTALLATION TOP & BOTTOM (TO CONCRETE)		
	NOTE 1	NOTE 2		NOTE 1	NOTE 2		NOTE 1	NOTE 2	
FROM 45.1 TO 61.8	10"	10"		9"	6"		10"	7"	
	10"	7"		10"	7"		7"	4 1/2"	
FROM 61.8 TO 91.4	10"	9"		6"	5"		7 1/2"	6"	
	7 1/2"	4 1/2"		7"	5 1/2"		5"	4"	
	NOTE 3	NOTE 4	NOTE 5	NOTE 3	NOTE 4	NOTE 5	NOTE 3	NOTE 4	NOTE 5
FROM 91.5 TO 134.3	10"	9"	6 1/2"	7" *	4 1/2" *	4" *	9"	6"	5"
	10"	4 1/2"	3 1/2"	8 1/2" *	5 1/2" *	4 1/2" *	6"	4"	3"
FROM 134.4 TO 168.1	10"	6"	5 1/2"	5 1/2" *	3 1/2" *	3 1/2" *	7"	4 1/2"	4 1/2"
	6 1/2"	3"	2 1/2"	6 1/2" *	4 1/2" *	4" *	4 1/2"	3"	2 1/2"
FROM 168.2 TO 226.3	7"	5 1/2"	5 1/2"	4" *	3 1/2" *	3 1/2" *	5"	4 1/2"	4 1/2"
	3 1/2"	2 1/2"	2 1/2"	5" *	4" *	4" *	3 1/2"	2 1/2"	2 1/2"

ANCHOR LEGEND

TAPCON OR POWER CALK-IN
ZAMAC NAILIN

* SPACING ONLY VALID FOR WALL MOUNT INSTALLATION AS PER SECTIONS A & C (WITH BOTTOM ANGLE LEG POINTING UP).

** SEE SHEET 4 OF 6 FOR ANCHORS TYPE & SPACING FOR INSTALLATIONS INTO WOOD FRAME BUILDINGS.

*** MAXIMUM ANCHOR SPACINGS ARE VALID FOR 3 1/2" EDGE DISTANCE. FOR E. D. LESS THAN 3 1/2", REDUCE ANCHOR SPACING BY MULTIPLYING SPACINGS SHOWN ON SCHEDULE BY THE FOLLOWING FACTORS. (Min. E. D. FOR POWER CALK-IN ANCHORS IS 2 1/2").

ACTUAL E. D.	FACTOR	
	TAPCON / ZAMAC NAILIN	POWER CALK-IN
3"	.86	.75
2 1/2"	.71	.50
2"	.50	–

ANCHOR SPACING LEGEND

(1) Max. ANCHOR SPCG. VALID FOR SPANS OF 8'-9" OR LESS.
(2) Max. ANCHOR SPCG. VALID FOR SPANS GREATER THAN 8'-9". TO MAXIMUM ALLOWED.
(3) Max. ANCHOR SPCG. VALID FOR SPANS OF 5'-0" OR LESS.
(4) Max. ANCHOR SPCG. VALID FOR SPANS GREATER THAN 5'-0" TO 7'-6".
(5) Max. ANCHOR SPCG. VALID FOR SPANS GREATER THAN 7'-6" TO Max. ALLOWED.

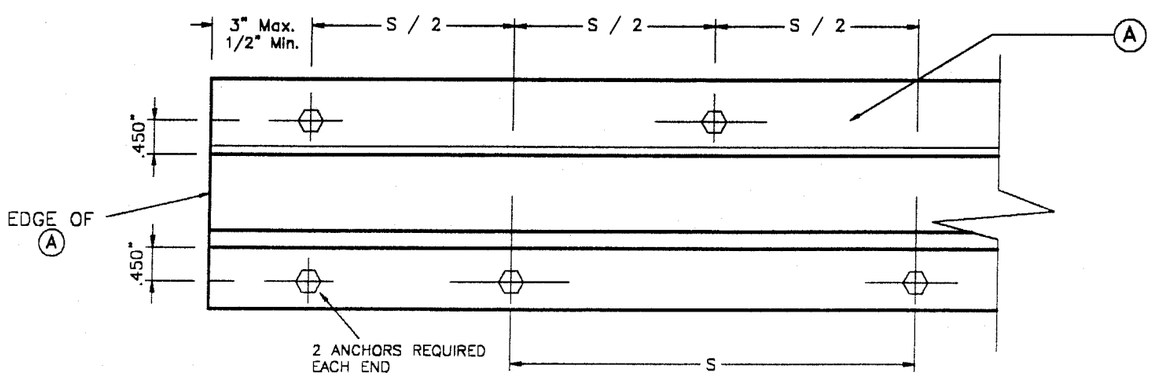

S = ANCHOR SPACING GIVEN ON SCHEDULE

STAGGERED ANCHORS

ANCHORS USED W/ TRACK "A" (TOP & BOTTOM) SHALL BE INSTALLED STAGGERED AT Max. SPACINGS INDICATED ON SCHEDULE.

11/19/02

PRODUCT REVISED
as complying with the Florida Buiding Code
Acceptance No 03-0116.11
Expiration Date 08/10/2006
By Helena A. Molina
Miami Dade Product Control Division

F.B.C. (H.V.H.Z.) / MIAMI-DADE COUNTY

TILLECO INC.
TILLIT TESTING & ENGINEERING COMPANY
6595 N.W. 36th. St., Ste. 217, VIRGINIA GARDENS, FLORIDA 33166
Phone : (305)871-1530 . Fax : (305)871-1531
EB-0006719
WALTER A. TILLIT Jr., P. E.
FLORIDA Lic. # 44167

ACCORDION SHUTTER

AWNINGS, SHUTTERS & SCREENS, INC.
1631 S. DIXIE HWY. BLDG D-1
POMPANO BEACH, FLORIDA 33060

REV. NO	DESCRIPTION	DATE	REV. No	DESCRIPTION	DATE
1	OLD DWG 99-278	11/22/02	3		
2	–	–	4		

SCALE –
11/22/02 DATE
02 – 555 DRAWING No
SHEET 6 OF 6