MIAMI-DADE

BUILDING CODE COMPLIANCE OFFICE (BCCO)
PRODUCT CONTROL DIVISION

MIAMI-DADE COUNTY, FLORIDA
METRO-DADE FLAGLER BUILDING
140 WEST FLAGLER STREET, SUITE 1603
MIAMI, FLORIDA 33130-1563
(305) 375-2901 FAX (305) 375-2908

NOTICE OF ACCEPTANCE (NOA)

Sunshine Aluminum Specialties, Inc.
5420 Maule Way
West Palm Beach, Florida 33407

SCOPE:
This NOA is being issued under the applicable rules and regulations governing the use of construction materials. The documentation submitted has been reviewed by Miami-Dade County Product Control Division and accepted by the Board of Rules and Appeals (BORA) to be used in Miami Dade County and other areas where allowed by the Authority Having Jurisdiction (AHJ).

This NOA shall not be valid after the expiration date stated below. The Miami-Dade County Product Control Division (In Miami Dade County) and/or the AHJ (in areas other than Miami Dade County) reserve the right to have this product or material tested for quality assurance purposes. If this product or material fails to perform in the accepted manner, the manufacturer will incur the expense of such testing and the AHJ may immediately revoke, modify, or suspend the use of such product or material within their jurisdiction. BORA reserves the right to revoke this acceptance, if it is determined by Miami-Dade County Product Control Division that this product or material fails to meet the requirements of the applicable building code.

This product is approved as described herein, and has been designed to comply with the High Velocity Hurricane Zone of the Florida Building Code.

DESCRIPTION: ASSA / Extruded Aluminum Bertha Bahama Shutter

APPROVAL DOCUMENT: Drawing No. 03-002, titled " ASSA / Extruded Bertha Bahama Shutter ", sheets 1 through 8 of 8, prepared by Tilteco, Inc., dated January 07, 2003, bearing the Miami-Dade County Product Control Revision stamp with the Notice of Acceptance number and Expiration date by the Miami-Dade County Product Control Division.

MISSILE IMPACT RATING: Large and Small Missile Impact

LABELING: Each unit shall bear a permanent label with the manufacturer's name or logo, city, state and the following statement: "Miami-Dade County Product Control Approved", unless otherwise noted herein.

RENEWAL of this NOA shall be considered after a renewal application has been filed and there has been no change in the applicable building code negatively affecting the performance of this product.

TERMINATION of this NOA will occur after the expiration date or if there has been a revision or change in the materials, use, and/or manufacture of the product or process. Misuse of this NOA as an endorsement of any product, for sales, advertising or any other purposes shall automatically terminate this NOA. Failure to comply with any section of this NOA shall be cause for termination and removal of NOA.

ADVERTISEMENT: The NOA number preceded by the words Miami-Dade County, Florida, and followed by the expiration date may be displayed in advertising literature. If any portion of the NOA is displayed, then it shall be done in its entirety.

INSPECTION: A copy of this entire NOA shall be provided to the user by the manufacturer or its distributors and shall be available for inspection at the job site at the request of the Building Official.

This NOA **revises NOA # 02-0604.02** and consists of this page 1 as well as approval document mentioned above. The submitted documentation was reviewed by **Helmy A. Makar, P.E.**

H.M.
05/08/03

PRODUCT CONTROL ACCEPTED

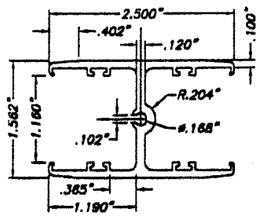

(A1) REGULAR INTERIOR MULLION
6005-T5 Alum. ALLOY
SCALE: 1/2" = 1"

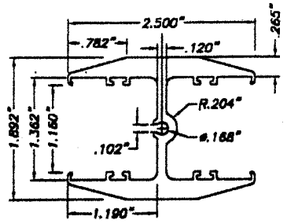

(A2) HEAVY INTERIOR MULLION
6005-T5 Alum. ALLOY
SCALE: 1/2" = 1"

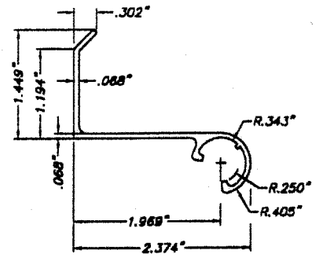

(B) FEMALE HINGE
SCALE: 1/2" = 1"

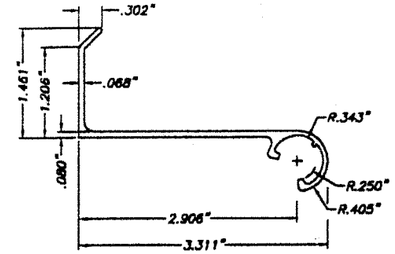

(C) 1" B. O. FEMALE HINGE
SCALE: 1/2" = 1"

COMPONENTS

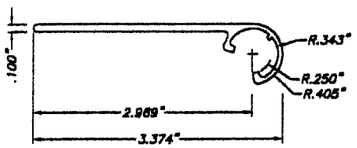

(D) FLAT FEMALE HINGE
SCALE: 1/2" = 1"

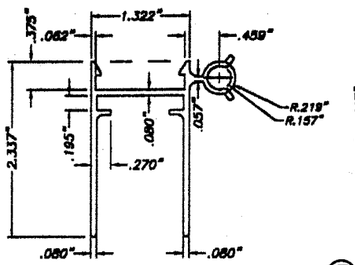

(E) BAHAMA MALE FRAME
SCALE: 1/2" = 1"

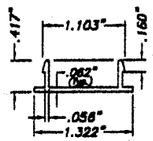

(F) SNAP CAP
SCALE: 1/2" = 1"

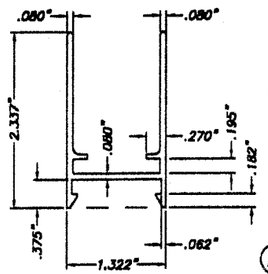

(G) BAHAMA FRAME
SCALE: 1/2" = 1"

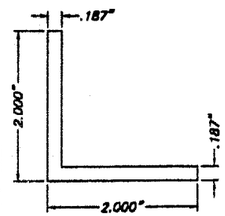

(H) CORNER KEY
1" LONG
SCALE: 1/2" = 1"

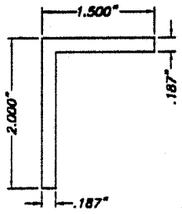

(N) WALL MOUNT
Alum. BRACKET
4" LONG
SCALE: 1/2" = 1"

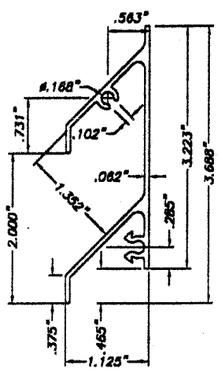

(I) HALF SHUTTER BLADE
SCALE: 1/2" = 1"

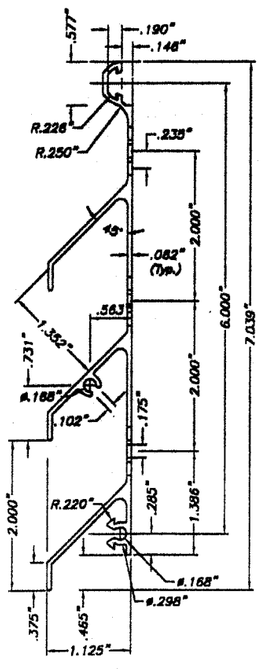

(J) SHUTTER BLADE
SCALE: 1/2" = 1"

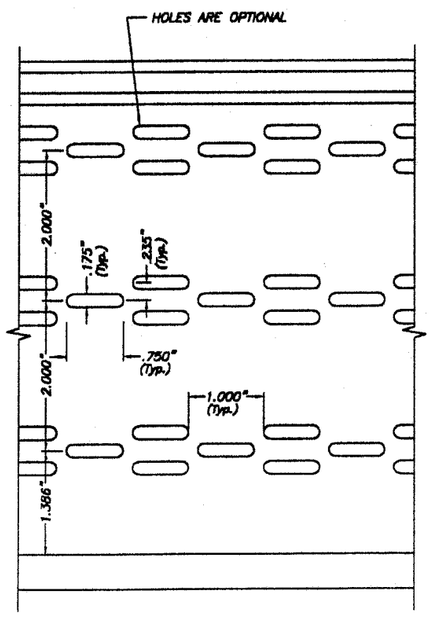

SHUTTER BLADE ELEVATION
SCALE: 1/2" = 1"

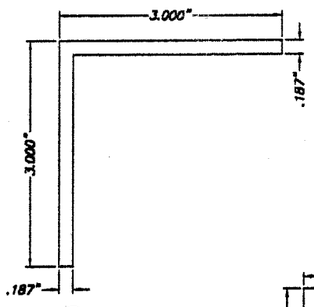

(O) BUILD-OUT
Alum. BRACKET
4" LONG
SCALE: 1/2" = 1"

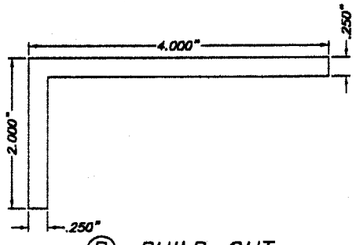

(P) BUILD-OUT
SIDE BRACKET
4" LONG
SCALE: 1/2" = 1"

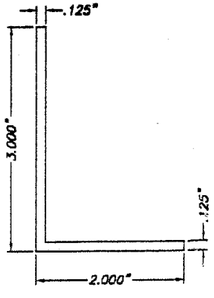

(Q) SILL ANGLE
SCALE: 1/2" = 1"

APR 14 2003

GENERAL NOTES:

1. BAHAMA SHUTTER SHOWN ON THIS PRODUCT APPROVAL DOCUMENT HAS BEEN DESIGNED IN ACCORDANCE WITH THE 2001 EDITION OF THE FLORIDA BUILDING CODE.
DESIGN WIND LOADS SHALL BE DETERMINED AS PER SECTION 1619 OF THE ABOVE MENTIONED CODE, FOR A BASIC WIND SPEED OF 146 m.p.h., AND IN ACCORDANCE W/ ASCE 7-98 STANDARD.
BAHAMA SHUTTER'S ADEQUACY FOR IMPACT AND FATIGUE RESISTANCE HAS BEEN VERIFIED IN ACCORDANCE WITH SECTION 1606.1.4 OF THE ABOVE MENTIONED CODE AS PER PA-201, PA-202, PA-203.

2. ALL ALUMINUM EXTRUSIONS SHALL BE 6063-T6 ALLOY (UNLESS OTHERWISE NOTED).

3. ALL SCREWS TO BE STAINLESS STEEL 304 OR 316 SERIES W/ 50 ksi YIELD POINT AND 90 ksi TENSILE STRENGTH OR CORROSION RESISTANT COATED CARBON STEEL AS PER DIN 50018.

4. ALL ALUMINUM POP RIVETS TO BE 5052 ALUMINUM ALLOY WITH ALUMINUM MANDREL.

5. BOLTS TO BE 2024-T4 ALUMINUM ALLOY GALVANIZED OR STAINLESS STEEL WITH 35 ksi MINIMUM MINIMUM YIELD POINT.

6. ANCHORS TO WALL SHALL BE AS FOLLOWS: (UNLESS OTHERWISE NOTED)
(A) TO EXISTING POURED CONCRETE:
- 1/4" ø TAPCON ANCHORS AS MANUFACTURED BY I.T.W. BUILDEX OR ELCO TEXTRON
- 1/4" ø x 7/8" CALK-IN ANCHORS AS MANUFACTURED BY THE POWERS FASTENING, INC.

NOTES:
A.1) MINIMUM EMBEDMENT OF TAPCON ANCHORS INTO POURED CONCRETE IS 1 1/2".

A.2) CALK-IN ANCHORS SHALL BE ENTIRELY EMBEDDED INTO THE POURED CONCRETE. NO EMBEDMENT INTO STUCCO SHALL BE PERMITTED.
1/4" ø-20 SCREWS USED SHALL BE 1 1/2" LONG MINIMUM SHOULD STUCCO EXIST AND 1" MINIMUM FOR WALLS WITH NO STUCCO.

A.3) IN CASE THAT PRECAST STONE, PRECAST CONCRETE PANELS, OR PAVERS BE FOUND ON THE EXISTING WALL OR FLOOR, ANCHORS SHALL BE LONG ENOUGH TO REACH THE MAIN STRUCTURE BEHIND SUCH PANELS. ANCHORAGE SHALL BE AS INDICATED ON NOTES A.1) & A.2) ABOVE.

(B) TO EXISTING CONCRETE BLOCK WALL:
- 1/4" ø TAPCON ANCHORS AS MANUFACTURED BY I.T.W. BUILDEX OR ELCO TEXTRON
- 1/4" ø x 7/8" CALK-IN ANCHORS AS MANUFACTURED BY THE POWERS FASTENING, INC.

NOTES:
B.1) MINIMUM EMBEDMENT OF TAPCON ANCHORS INTO THE CONCRETE BLOCK UNIT SHALL BE 1 1/4".

B.2) CALK-IN ANCHORS SHALL BE ENTIRELY EMBEDDED INTO THE CONCRETE BLOCK UNIT. NO EMBEDMENT INTO STUCCO SHALL BE PERMITTED. 1/4" ø-20 SCREWS USED SHALL BE 1 1/2" LONG MINIMUM SHOULD STUCCO EXIST AND 1" MINIMUM FOR WALLS WITH NO STUCCO.

B.3) IN CASE THAT PRECAST STONE OR PRECAST CONCRETE PANELS BE FOUND ON THE EXISTING WALL, ANCHORS SHALL BE LONG ENOUGH TO REACH THE MAIN STRUCTURE BEHIND SUCH PANELS. ANCHORAGE SHALL BE AS INDICATED ON NOTES B.1) & B.2) ABOVE.

(C) ANCHORS SHALL BE INSTALLED FOLLOWING ALL OF THE RECOMMENDATIONS AND SPECIFICATIONS OF THE ANCHOR'S MANUFACTURER.

7. EACH SHUTTER SHALL HAVE A LEGIBLE AND READILY VISIBLE MARKING INSTRUCTING OWNER OR TENANT TO SECURE SHUTTER WITH SIDE & SILL BRACKETS DURING PERIODS OF HURRICANE WARNINGS.

8. IT SHALL BE THE RESPONSIBILITY OF THE CONTRACTOR TO VERIFY THE SOUNDNESS OF THE STRUCTURE WHERE SHUTTER IS TO BE ATTACHED TO INSURE PROPER ANCHORAGE.

9. SHUTTER'S MANUFACTURER STAMP SHALL BE PLACED ON THE EXPOSED SURFACE OF THE BAHAMA FRAME (E) OR (G).
ONE LABEL SHALL BE PLACED FOR EVERY OPENING.
LABEL SHALL READ AS FOLLOWS:
SUNSHINE ALUMINUM SPECIALTIES, INC.
WEST PALM BEACH, FL.
MIAMI-DADE COUNTY PRODUCT CONTROL APPROVED.

10. (a) THIS PRODUCT APPROVAL DOCUMENT (P.A.D.) PREPARED BY THIS ENGINEER IS GENERIC AND DOES NOT PROVIDE INFORMATION FOR A SITE SPECIFIC PROJECT; i.e. WHERE THE SITE CONDITIONS DEVIATE FROM THE P.A.D.

(b) CONTRACTOR TO BE RESPONSIBLE FOR THE SELECTION, PURCHASE AND INSTALLATION OF THIS PRODUCT BASED ON THIS PRODUCT APPROVAL PROVIDED HE/SHE DOES NOT DEVIATE FROM THE CONDITIONS DETAILED ON THIS DOCUMENT.

(c) THIS PRODUCT APPROVAL DOCUMENT WILL BE CONSIDERED INVALID IF MODIFIED.

(d) SITE SPECIFIC PROJECTS SHALL BE PREPARED BY A FLORIDA REGISTERED ENGINEER OR ARCHITECT WHICH WILL BECOME THE PROFESSIONAL OF RECORD (P.O.R) FOR THE PROJECT AND WHO WILL BE RESPONSIBLE FOR THE PROPER USE OF THE P.A.D. PROFESSIONAL OF RECORD, ACTING AS A DELEGATED ENGINEER TO THE P.A.D. ENGINEER, SHALL SUBMIT TO THIS LATTER THE SITE SPECIFIC DRAWINGS FOR REVIEW.

(e) THIS P.A.D. SHALL BEAR THE DATE AND ORIGINAL SEAL AND SIGNATURE OF THE PROFESSIONAL ENGINEER THAT PREPARED IT.

PRODUCT REVISED
as complying with the Florida
Buiding Code
Acceptance No 03-0121.02
Expiration Date 07/01/2007
By Helmy A. Nelson
Miami Dade Product Control
Division

F.B.C. (H.V.H.Z.)/ MIAMI-DADE COUNTY

TILTECO INC.
TILLIT TESTING & ENGINEERING COMPANY
8595 N.W. 38th. St., Ste. 217, VIRGINIA GARDENS, FLORIDA 33166
Phone : (305)871-1530 . Fax : (305)871-1531
EB-0006719
WALTER A. TILLIT Jr., P. E.
FLORIDA Lic. # 44167

ASSA / EXTRUDED BERTHA BAHAMA SHUTTER

SUNSHINE ALUMINUM SPECIALTIES, INC.
(A.S.S.A. # 12)
5420 MAULE WAY
WEST PALM BEACH, FL. 33407

REV. No	DESCRIPTION	DATE	REV. No	DESCRIPTION	DATE
1	OLD 99-163	-	3	-	-
2	-	-	4	-	-

AS SHOWN
SCALE
1/7/03
DATE
03-002
DRAWING No
SHEET 1 OF 8

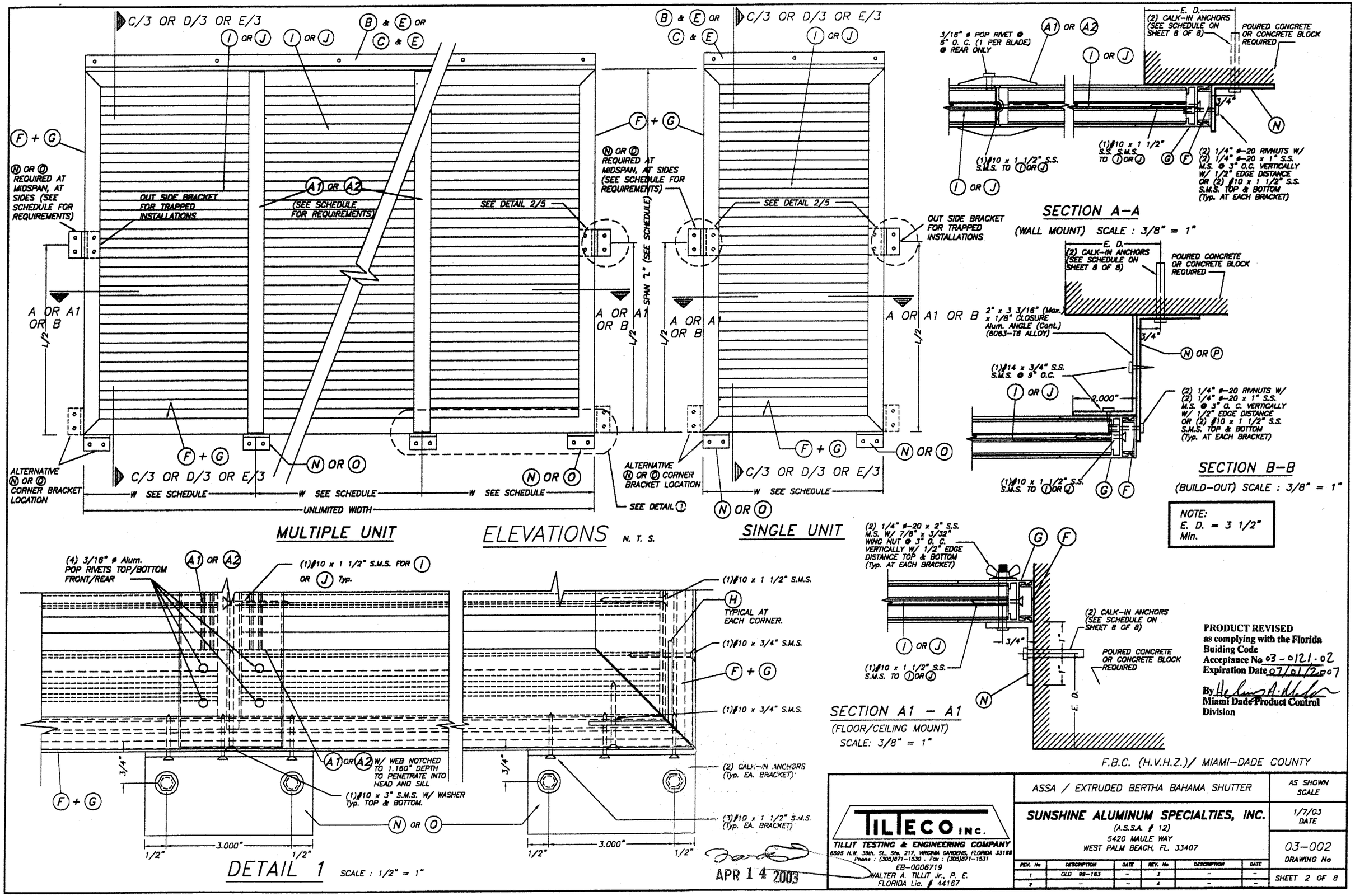

PRODUCT REVISED
as complying with the Florida Buiding Code
Acceptance No 03-0121.02
Expiration Date 07/01/2007
By [signature]
Miami Dade Product Control Division

F.B.C. (H.V.H.Z.)/ MIAMI-DADE COUNTY

APR 14 2003

TILTECO INC.
TILLIT TESTING & ENGINEERING COMPANY
6595 N.W. 36th. St., Ste. 217, VIRGINIA GARDENS, FLORIDA 33166
Phone : (305)871-1530 . Fax : (305)871-1531
EB-0006719
WALTER A. TILLIT Jr., P. E.
FLORIDA Lic. # 44167

ASSA / EXTRUDED BERTHA BAHAMA SHUTTER

SUNSHINE ALUMINUM SPECIALTIES, INC.
(A.S.S.A. # 12)
5420 MAULE WAY
WEST PALM BEACH, FL. 33407

REV. No	DESCRIPTION	DATE	REV. No	DESCRIPTION	DATE
1	OLD 99-163	-	3	-	-
2	-	-	4	-	-

AS SHOWN SCALE
1/7/03 DATE
03-002 DRAWING No
SHEET 2 OF 8

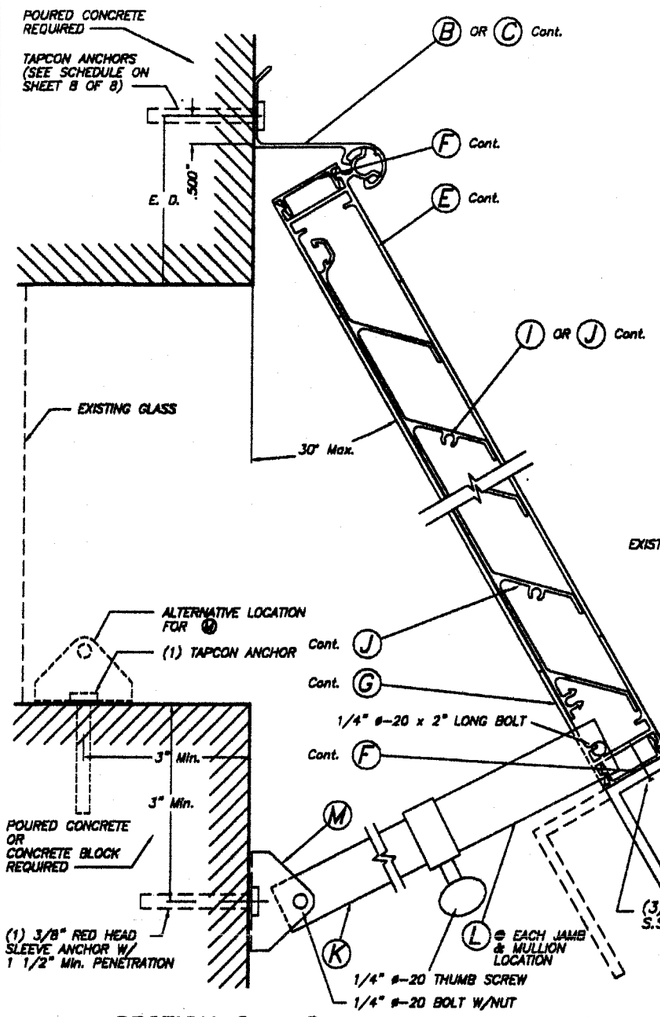

SECTION C – C (WALL MOUNT)

OPEN POSITION (74 m.p.h. WIND SPEED)

SCALE: 3/8" = 1"

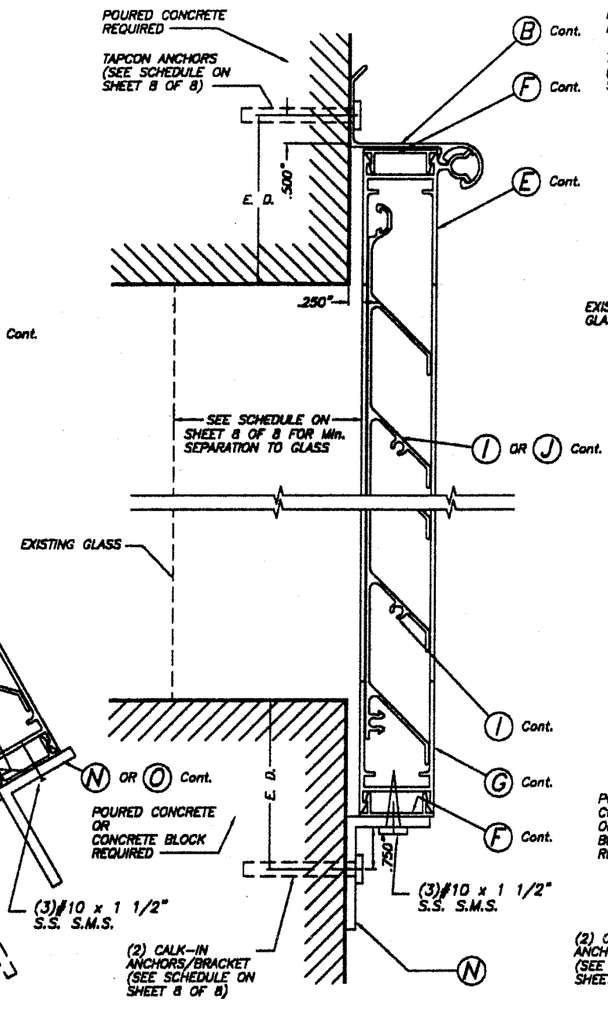

SECTION C – C (WALL MOUNT)

HURRICANE POSITION

SCALE: 3/8" = 1"

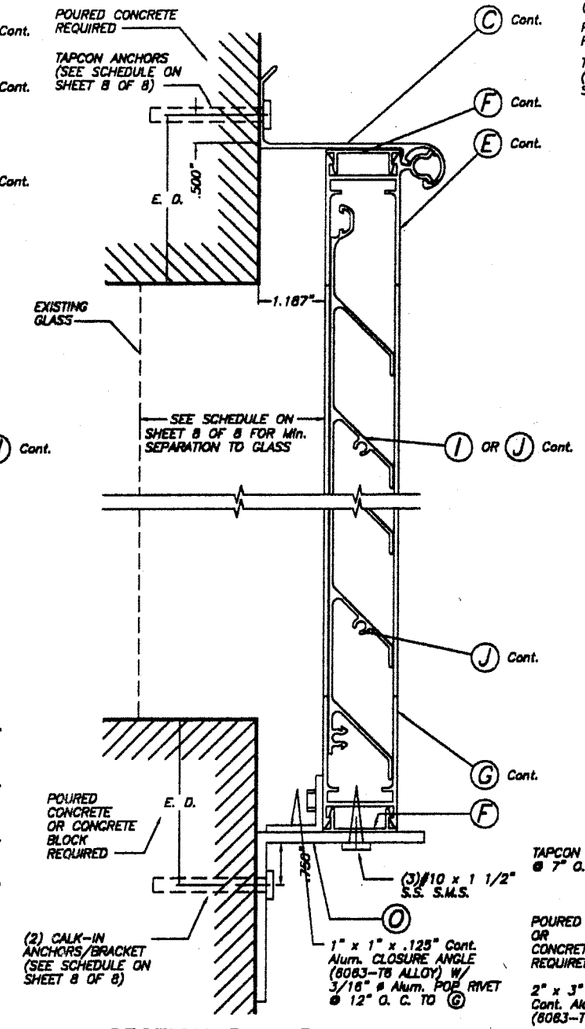

SECTION D – D (BUILD-OUT)

HURRICANE POSITION

SCALE: 3/8" = 1"

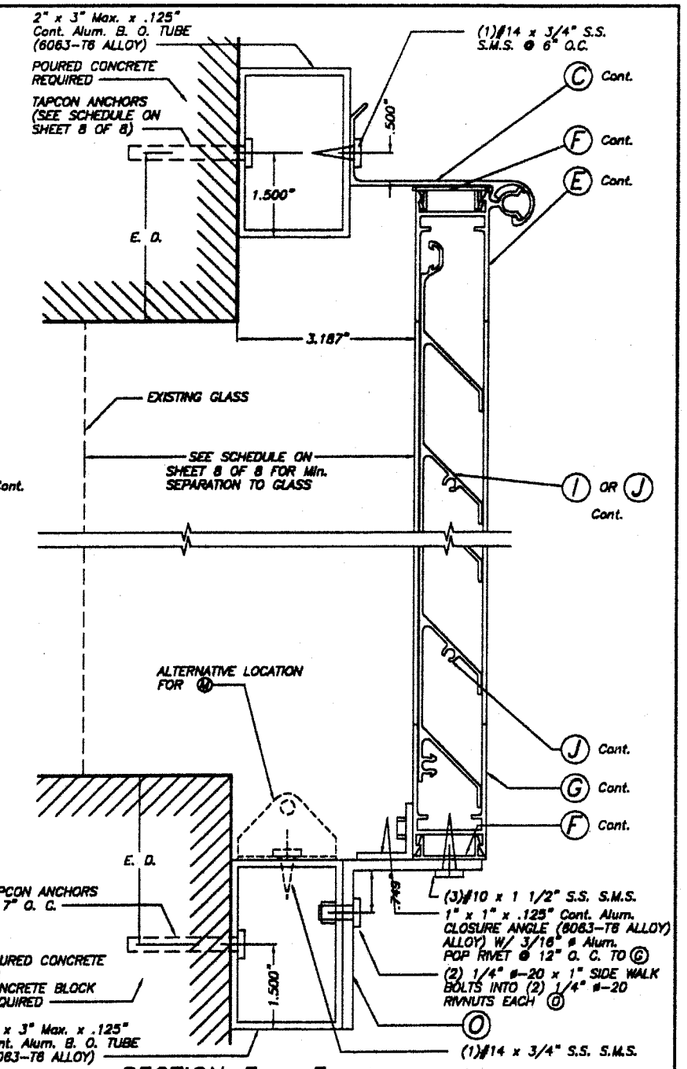

SECTION E – E (BUILD-OUT)

HURRICANE POSITION

SCALE: 3/8" = 1"

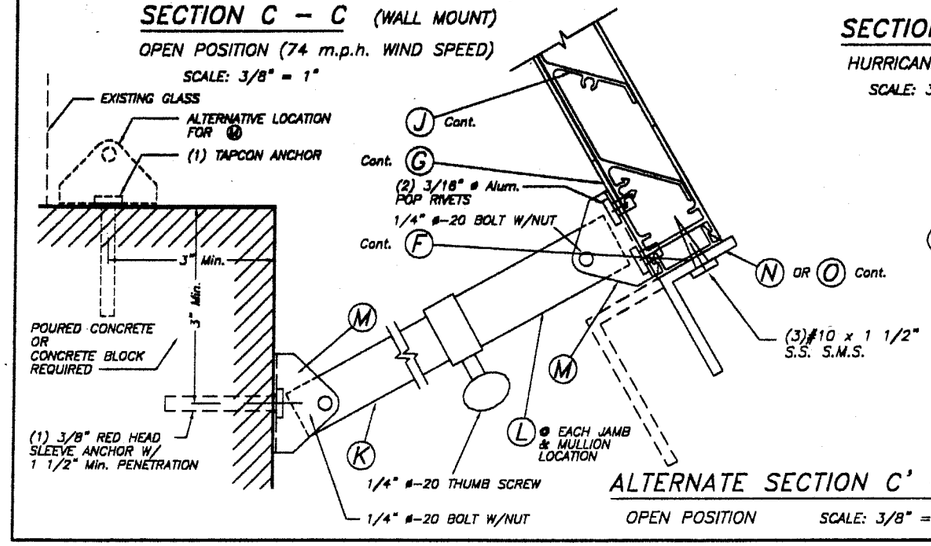

ALTERNATE SECTION C' – C' (WALL MOUNT)

OPEN POSITION SCALE: 3/8" = 1"

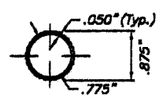

K .875" SERRATED TUBE

INSIDE ARM
6063-T6 ALLOY
SCALE : 3/8" = 1"

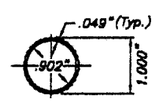

L 1" SERRATED TUBE

OUTSIDE ARM
6063-T6 ALLOY
SCALE : 3/8" = 1"

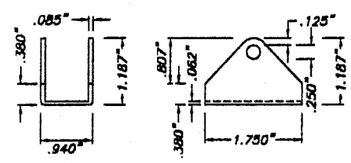

M CAMEL BACK HINGE

3003-H14 Alum. ALLOY

SCALE : 3/8" = 1"

NOTE:
E. D. = 3 1/2" Min.

APR 14 2003

PRODUCT REVISED
as complying with the Florida Buiding Code
Acceptance No 03-0121.02
Expiration Date 07/01/2007
By Helena A. Molina
Miami Dade Product Control Division

F.B.C. (H.V.H.Z.)/ MIAMI-DADE COUNTY

TILTECO INC.
TILLIT TESTING & ENGINEERING COMPANY
6595 N.W. 36th. St., Ste. 217, VIRGINIA GARDENS, FLORIDA 33166
Phone : (305)871-1530 . Fax : (305)871-1531
EB-0006719
WALTER A. TILLIT Jr., P. E.
FLORIDA Lic. # 44167

ASSA / EXTRUDED BERTHA BAHAMA SHUTTER

SUNSHINE ALUMINUM SPECIALTIES, INC.
(A.S.S.A. # 12)
5420 MAULE WAY
WEST PALM BEACH, FL. 33407

REV. No	DESCRIPTION	DATE	REV. No	DESCRIPTION	DATE
1	OLD 98-163	–	3	–	–
2	–	–	4	–	–

AS SHOWN SCALE

1/7/03 DATE

03-002 DRAWING No

SHEET 3 OF 8

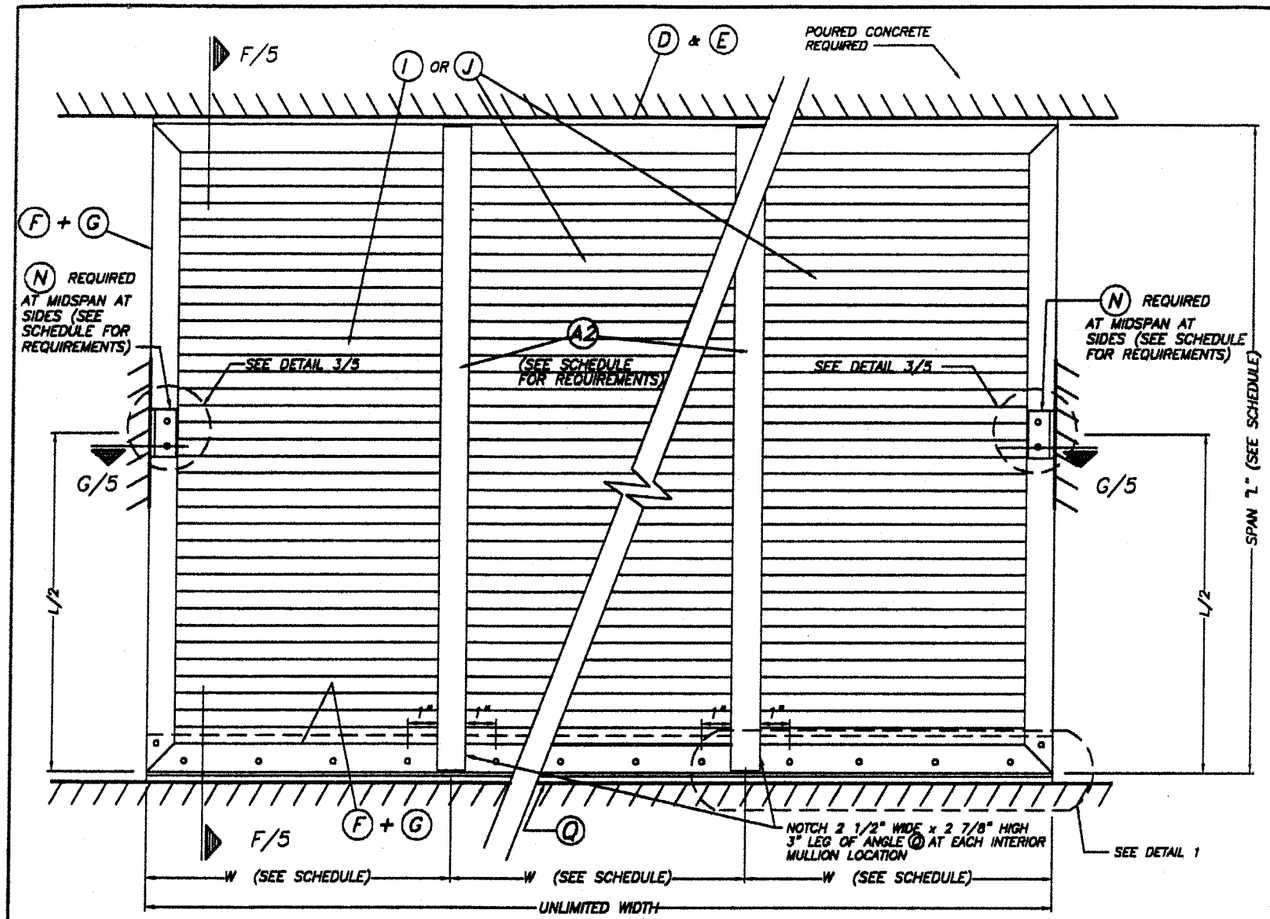

MULTIPLE UNIT

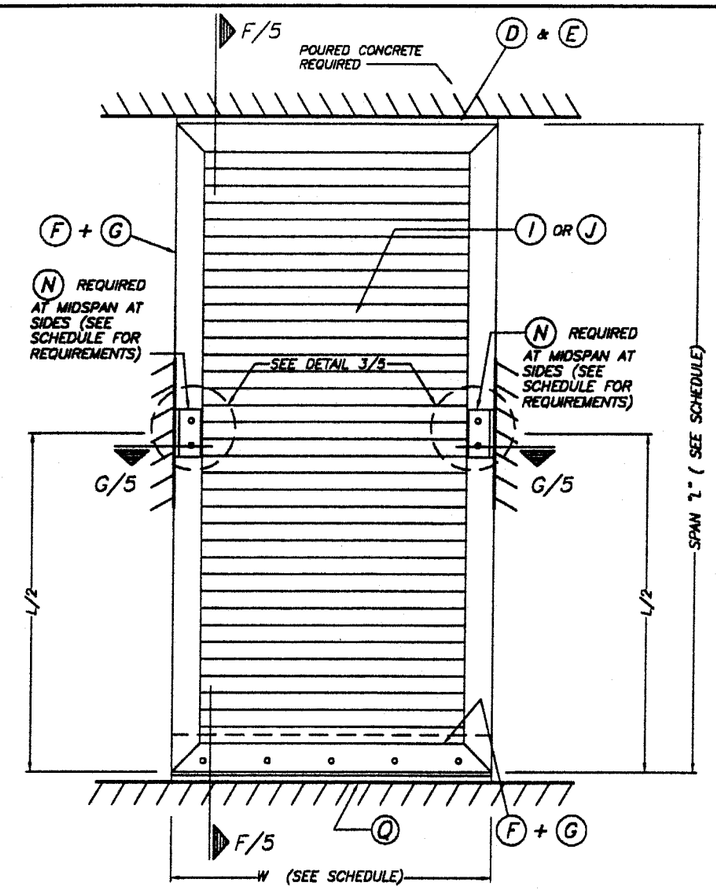

SINGLE UNIT

ELEVATIONS N. T. S.

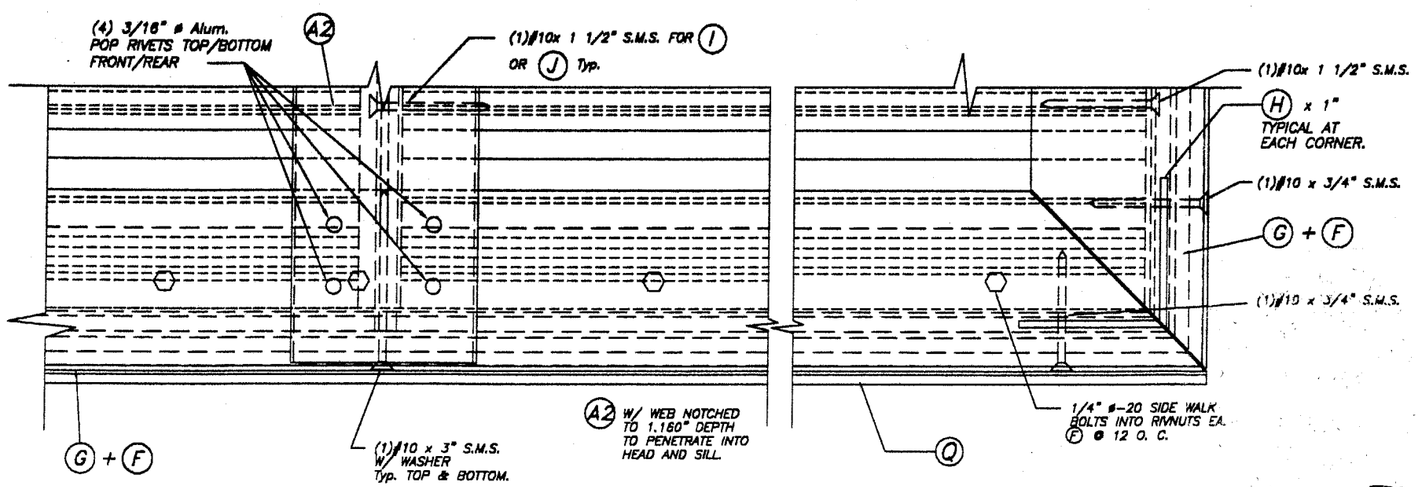

DETAIL 1 SCALE : 1/2" = 1"

PRODUCT REVISED
as complying with the Florida
Buiding Code
Acceptance No 03-0121.02
Expiration Date 07/01/2007
By Helmut A. Moller
Miami Dade Product Control
Division

F.B.C. (H.V.H.Z.)/ MIAMI-DADE COUNTY

APR 14 2003

TILTECO INC.
TILLIT TESTING & ENGINEERING COMPANY
6565 N.W. 39th. St., Ste. 217, VIRGINIA GARDENS, FLORIDA 33166
Phone : (305)871-1530 . Fax : (305)871-1531
EB-0006719
WALTER A. TILLIT Jr., P. E.
FLORIDA Lic. # 44167

ASSA / EXTRUDED BERTHA BAHAMA SHUTTER

SUNSHINE ALUMINUM SPECIALTIES, INC.
(A.S.S.A. # 12)
5420 MAULE WAY
WEST PALM BEACH, FL. 33407

AS SHOWN SCALE
1/7/03 DATE
03-002 DRAWING No
SHEET 4 OF 8

REV. No	DESCRIPTION	DATE	REV. No	DESCRIPTION	DATE
1	OLD 99-163	–	3	–	–
2	–	–	4	–	–

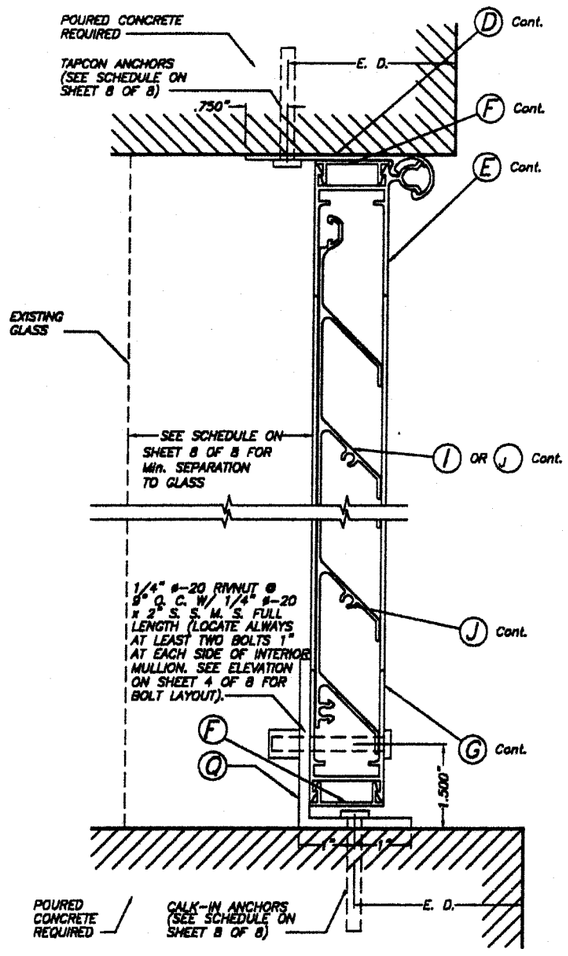

SECTION F – F (FLOOR/CEILING MOUNT)

HURRICANE POSITION

SCALE: 3/8" = 1"

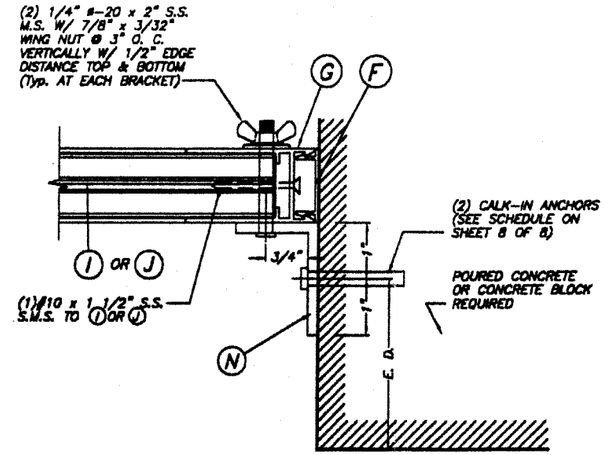

SECTION G – G

(FLOOR/CEILING MOUNT)

HURRICANE POSITION

SCALE: 3/8" = 1"

NOTE:
E. D. = 3 1/2" Min.

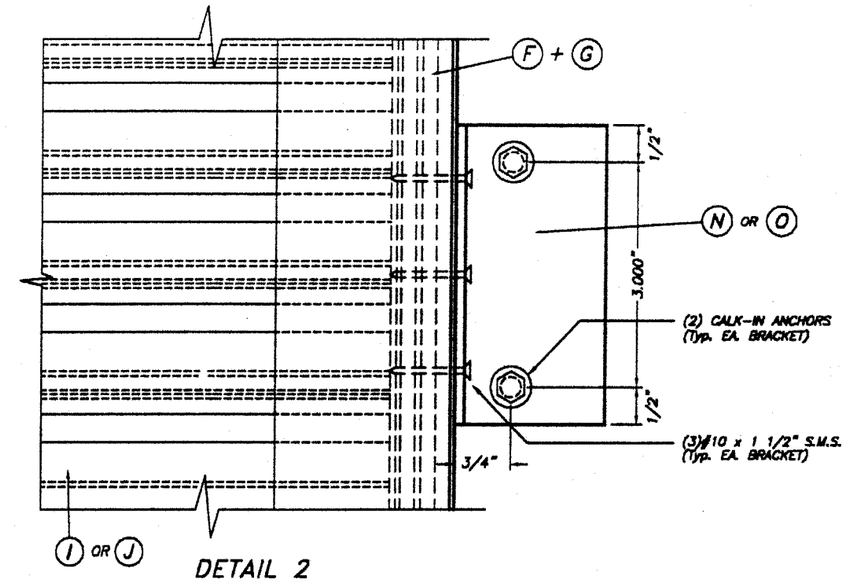

DETAIL 2

SCALE : 1/2" = 1"

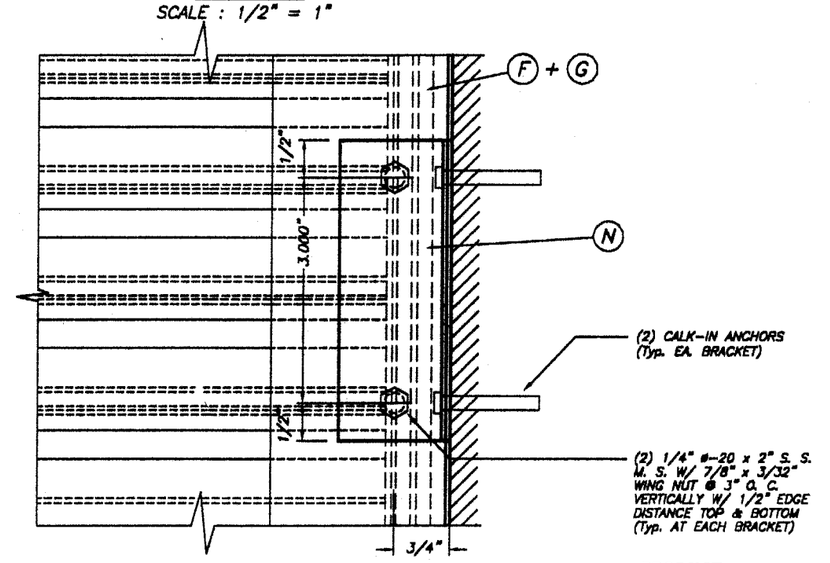

DETAIL 3

SCALE : 1/2" = 1"

PRODUCT REVISED
as complying with the Florida Buiding Code
Acceptance No 03-0121.02
Expiration Date 07/01/2007
By [signature]
Miami Dade Product Control Division

F.B.C. (H.V.H.Z.)/ MIAMI-DADE COUNTY

APR 14 2003

TILTECO INC.
TILLIT TESTING & ENGINEERING COMPANY
6595 N.W. 36th. St., Ste. 217, VIRGINIA GARDENS, FLORIDA 33166
Phone : (305)871-1530 . Fax : (305)871-1531
EB-0006719
WALTER A. TILLIT Jr., P. E.
FLORIDA Lic. # 44167

ASSA / EXTRUDED BERTHA BAHAMA SHUTTER

SUNSHINE ALUMINUM SPECIALTIES, INC.
(A.S.S.A. # 12)
5420 MAULE WAY
WEST PALM BEACH, FL. 33407

REV. No	DESCRIPTION	DATE	REV. No	DESCRIPTION	DATE
1	OLD 99-163	–	3	–	–
2	–	–	4	–	–

AS SHOWN SCALE

1/7/03 DATE

03-002 DRAWING No

SHEET 5 OF 8

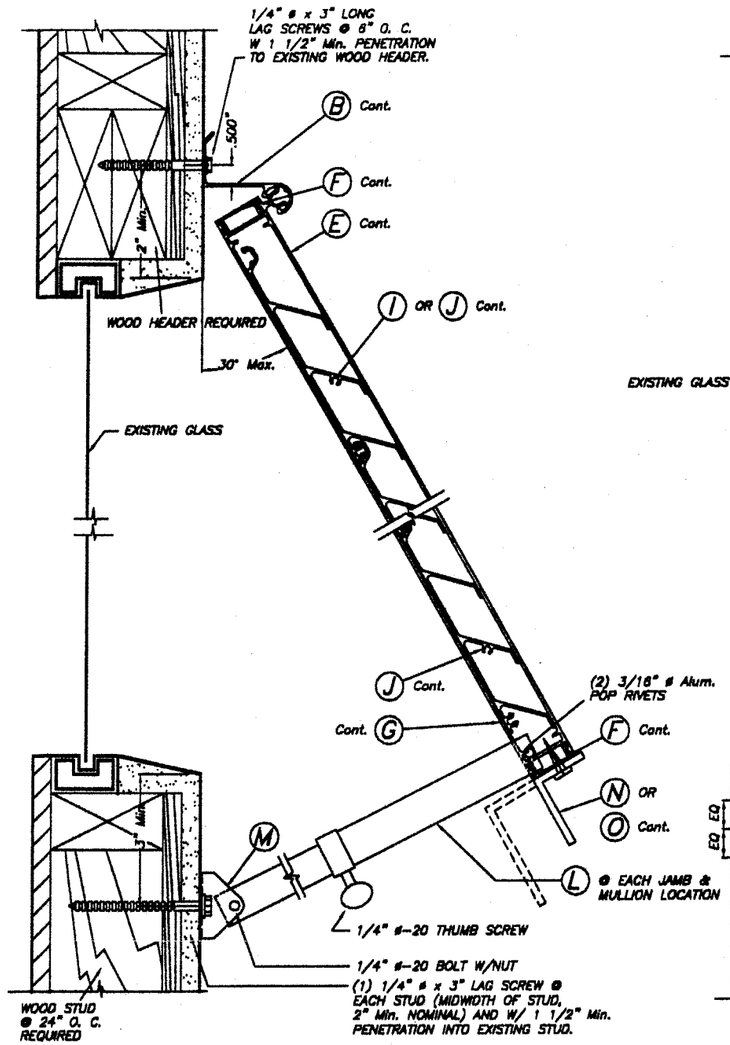

OPEN POSITION DETAIL : (74 m.p.h. OR LESS WIND SPEED)

SCALE: 3/8" = 1"

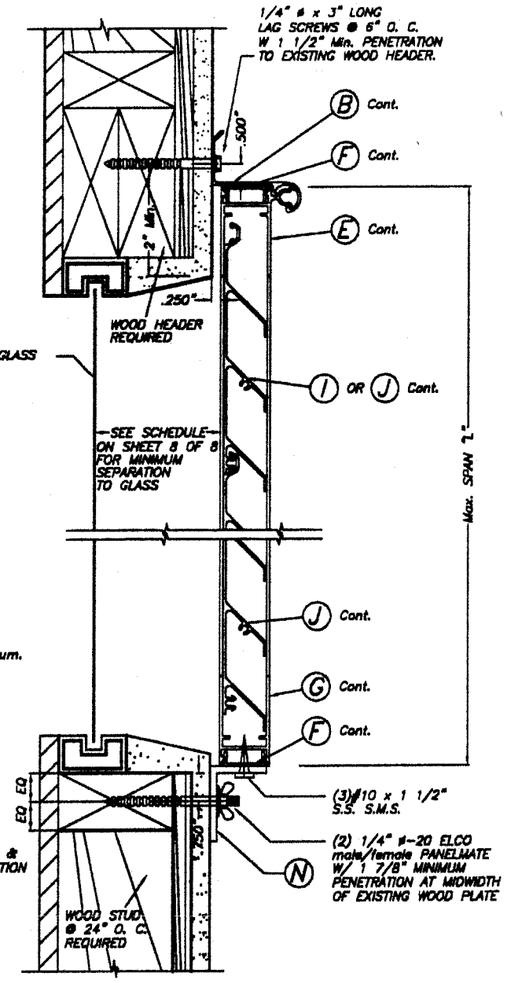

ALTERNATIVE 1

HURRICANE POSITION

SCALE: 3/8" = 1"

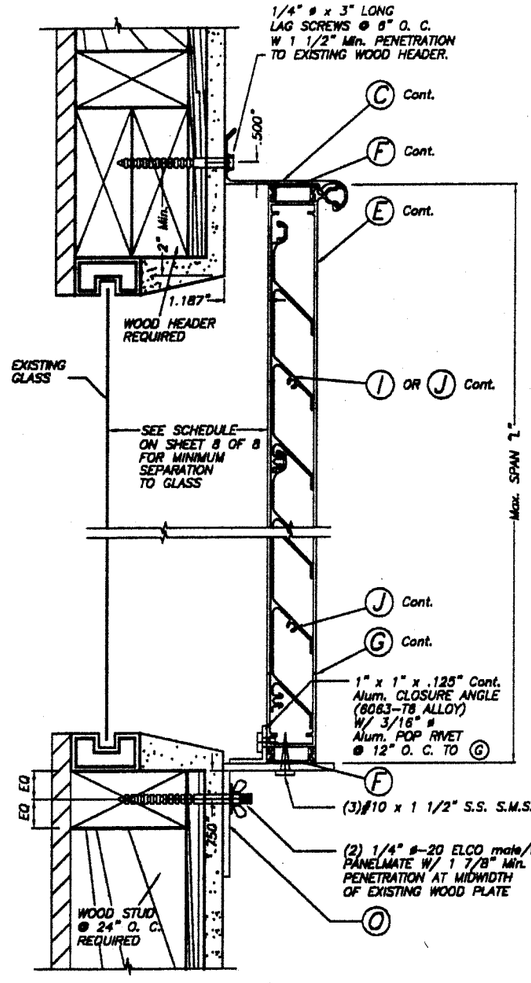

ALTERNATIVE 2

HURRICANE POSITION

SCALE: 3/8" = 1"

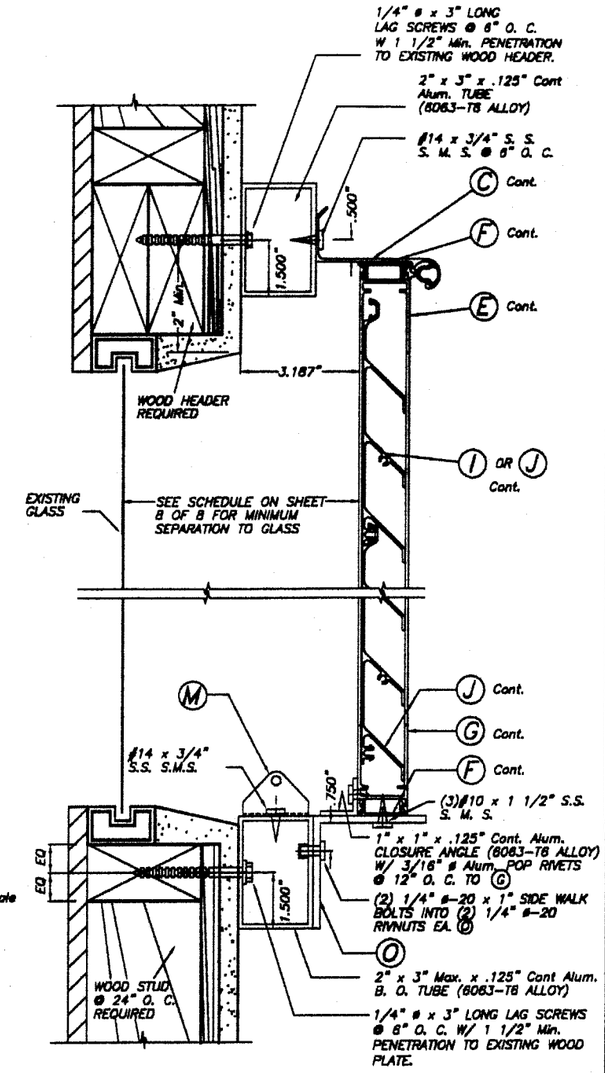

ALTERNATIVE 3

HURRICANE POSITION

SCALE: 3/8" = 1"

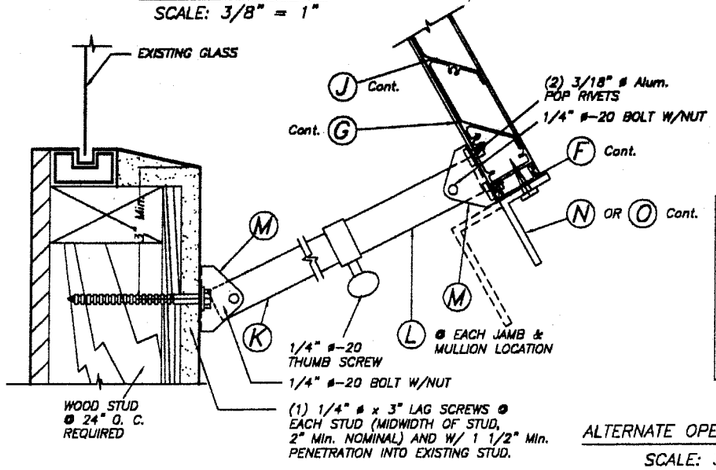

ALTERNATE OPEN POSITION DETAIL

SCALE: 3/8" = 1"

WALL MOUNTING INSTALLATION & BUILD-OUT – SECTION A

INSTALLATION DETAILS ON EXISTING WOOD BUILDINGS

NOTES :

1. INSTALLATIONS ARE ONLY VALID FOR INSTALLATIONS WITH DESIGN WIND LOADS LESS OR EQUAL THAN +62.0, -75.0 p.s.f. AND Max. SHUTTER SPAN AS PER SCHEDULES ON SHEET 8 OF 8.
2. NEW 2" x 6" P. T. TO BE SOUTHERN PINE No. 2, SURFACED DRY WITH 19 % M. M. C. W/ SPECIFIC DENSITY OF 0.55.
3. FOR NEW WOOD FRAME CONSTRUCTION: WOOD MEMBERS TO BE SOUTHERN PINE No. 2, W/ SPECIFIC DENSITY OF 0.55 OR EQUAL.

PRODUCT REVISED
as complying with the Florida
Buiding Code
Acceptance No 03-0121.02
Expiration Date 07/01/2007
By Helena A. Melo
Miami Dade Product Control
Division

F.B.C. (H.V.H.Z.)/ MIAMI-DADE COUNTY

APR 14 2003

TILTECO INC.
TILLIT TESTING & ENGINEERING COMPANY
6595 N.W. 36th. St., Ste. 217, VIRGINIA GARDENS, FLORIDA 33166
Phone : (305)871-1530 . Fax : (305)871-1531
EB-0006719
WALTER A. TILLIT Jr., P. E.
FLORIDA Lic. # 44167

ASSA / EXTRUDED BERTHA BAHAMA SHUTTER

SUNSHINE ALUMINUM SPECIALTIES, INC.
(A.S.S.A. # 12)
5420 MAULE WAY
WEST PALM BEACH, FL. 33407

AS SHOWN SCALE

1/7/03 DATE

03-002 DRAWING No

SHEET 8 OF 8

REV. No	DESCRIPTION	DATE	REV. No	DESCRIPTION	DATE
1	OLD 99-163	–	3	–	–
2	–	–	4	–	–

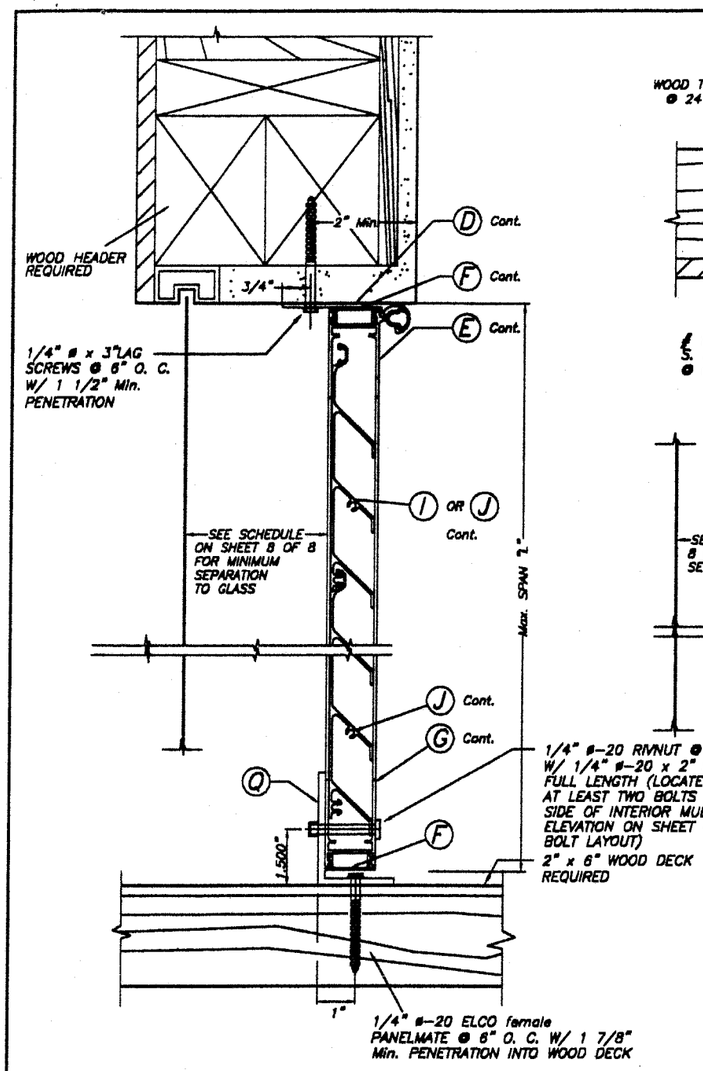

ALTERNATIVE 4A

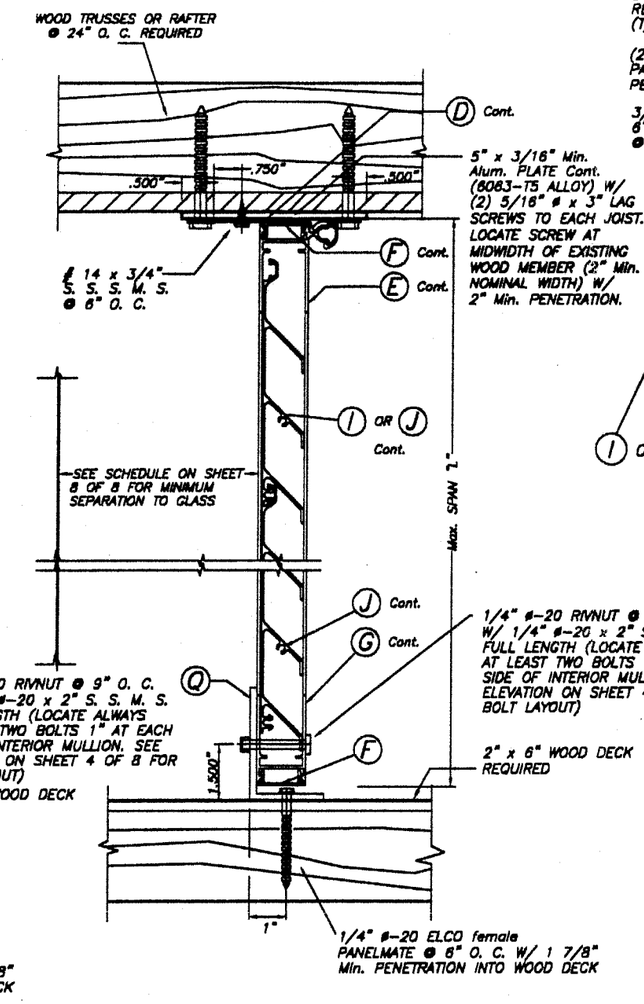

ALTERNATIVE 4B

FLOOR/CEILING MOUNTING INSTALLATION – SECTION A SCALE: 1/4" = 1"

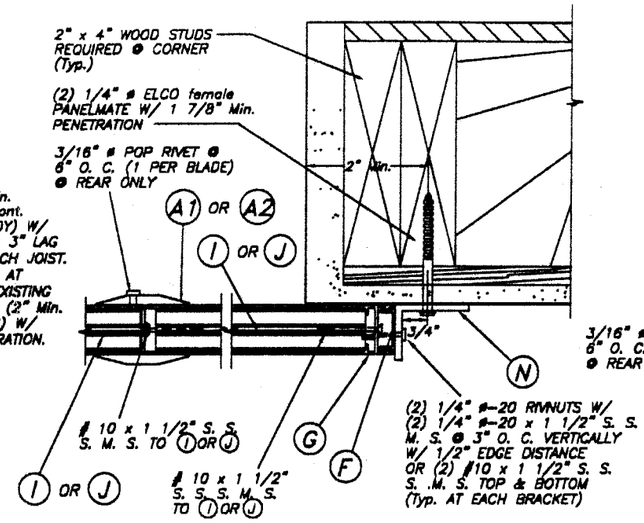

SECTION A–A

(WALL MOUNT) SCALE : 1/4" = 1"

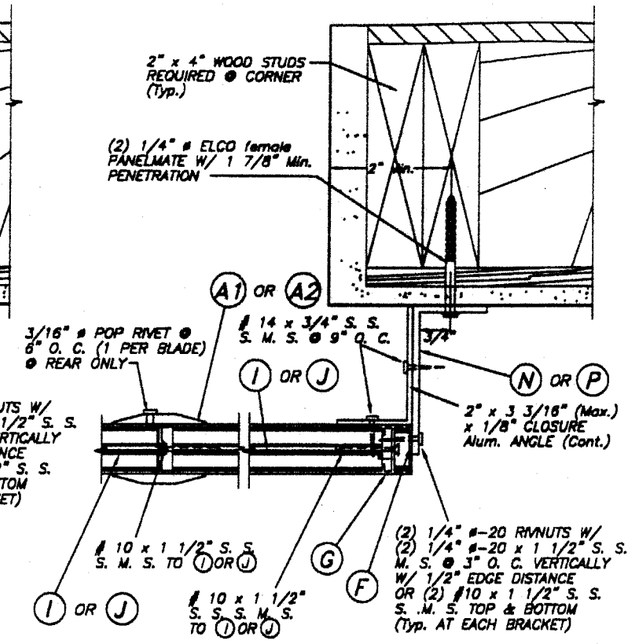

SECTION B–B

(WALL MOUNT) SCALE : 1/4" = 1"

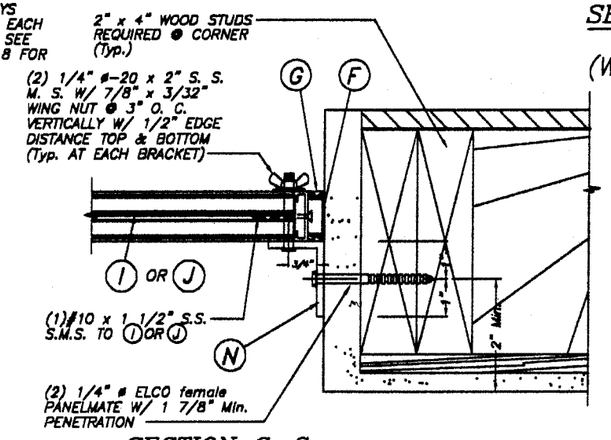

SECTION G–G

(FLOOR/CEILING MOUNT) SCALE : 1/4" = 1"

PRODUCT REVISED
as complying with the Florida Buiding Code
Acceptance No 03-0121.02
Expiration Date 07/01/2007
By Helena A. Molina
Miami Dade Product Control Division

INSTALLATION DETAILS ON EXISTING WOOD BUILDINGS

NOTES :

1. INSTALLATIONS ARE ONLY VALID FOR INSTALLATIONS WITH DESIGN WIND LOADS LESS OR EQUAL THAN +62.0, –75.0 p.s.f. AND Max. SHUTTER SPAN AS PER SCHEDULES ON SHEET 8 OF 8.
2. NEW 2" x 6" P. T. TO BE SOUTHERN PINE No. 2, SURFACED DRY WITH 19 % M. M. C. W/ SPECIFIC DENSITY OF 0.55.
3. FOR NEW WOOD FRAME CONSTRUCTION: WOOD MEMBERS TO BE SOUTHERN PINE No. 2, W/ SPECIFIC DENSITY OF 0.55 OR EQUAL.

APR 14 2003

F.B.C. (H.V.H.Z.)/ MIAMI–DADE COUNTY

TILTECO INC.
TILLIT TESTING & ENGINEERING COMPANY
6585 N.W. 36th. St., Ste. 217, VIRGINIA GARDENS, FLORIDA 33166
Phone : (305)871-1530 , Fax : (305)871-1531
EB-0006719
WALTER A. TILLIT Jr., P. E.
FLORIDA Lic. # 44167

ASSA / EXTRUDED BERTHA BAHAMA SHUTTER

SUNSHINE ALUMINUM SPECIALTIES, INC.
(A.S.S.A. # 12)
5420 MAULE WAY
WEST PALM BEACH, FL. 33407

REV. No	DESCRIPTION	DATE	REV. No	DESCRIPTION	DATE
1	OLD 99-163	–	3	–	–
2	–	–	4	–	–

AS SHOWN SCALE

1/7/03 DATE

03-002 DRAWING No

SHEET 7 OF 8

SCHEDULE # 1

MAXIMUM SINGLE UNIT FOR A CORRESPONDING DESIGN PRESSURE AND MOUNTING TYPE

BAHAMA SHUTTER TYPE	SINGLE UNIT ELEVATION 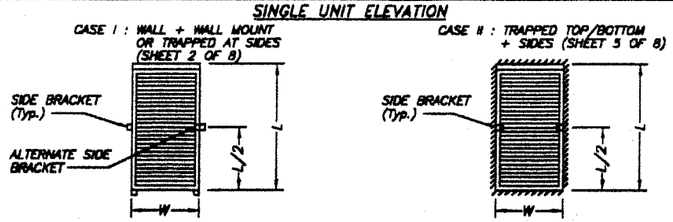 			
DESIGN PRESSURE RATING (p.s.f.) AND CASE #	MAXIMUM UNIT WIDTH "W" (IN)	MAXIMUM SPAN "L" (IN)		
		W/O SIDE BRACKET	W/ SIDE BRACKET	MINIMUM SEPARATION TO GLASS (IN)
CASES I & II +56.0 , −63.0	42"	52"	N/A	3 1/8"
CASES I & II +75.0 , −100.0	42"	N/A	96"	2 1/8"

SCHEDULE # 1A

MAXIMUM MULTIPLE UNIT FOR A CORRESPONDING DESIGN PRESSURE AND MOUNTING TYPE

BAHAMA SHUTTER TYPE	MULTIPLE UNIT ELEVATION 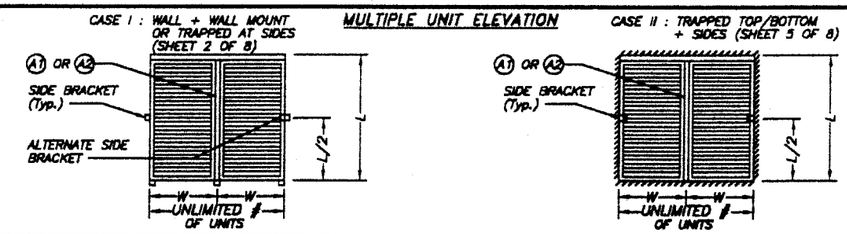 				
DESIGN PRESSURE RATING (p.s.f.) AND CASE #	MAXIMUM UNIT WIDTH "W" (IN)	MAXIMUM SPAN "L" (IN)			
		W/O SIDE BRACKET	W/ SIDE BRACKET	INTERIOR MULLION TYPE REQUIRED	MINIMUM SEPARATION TO GLASS (IN)
CASE I +50.0 , −43.3	36 1/2"	72 1/2"	N/A	A1	2 1/2"
CASE I +62.0 , −75.0	36 1/2"	N/A	83"	A2	2 3/8"
CASE II +62.0 , −75.0	36 1/2"	N/A	84"	A2	2 3/8"

SCHEDULE # 2

LIMITATIONS FOR SINGLE AND MULTIPLE UNITS BAHAMA SHUTTER'S UNIT WIDTH (IN), SPAN L (IN) AND CORRESPONDING MAXIMUM DESIGN PRESSURE (p.s.f.) FOR THE INSTALLATION OF SIDE & SILL BRACKETS INTO CONCRETE & MASONRY BUILDINGS BY MEANS OF (2) 1/4" ø x 7/8" CALK-IN ANCHORS *

MAXIMUM NEGATIVE DESIGN PRESSURE RATING (p.s.f.)	SINGLE UNITS				MULTIPLE UNITS			
	SIDE & SILL BRACKETS **				SIDE & SILL BRACKETS **			
	TO CONCRETE		TO BLOCK		TO CONCRETE		TO BLOCK	
	Max. "W"	Max. "L"	Max. "W"	Max. "L"	Max. "W"	Max. "L"	Max. "W"	Max. "L"
−55.7	42"	96"	42"	96"	36 1/2"	84"	36"	84"
−65.0	42"	96"	42"	96"	36 1/2"	84"	36" 31"	72" 84"
−75.0	42"	96"	42"	96"	36 1/2"	83"	36 1/2" 27"	62" 83"
−83.0	42"	96"	42"	96"	N/A	N/A	N/A	N/A
−100.0	42"	96"	42" 36"	63 73	N/A	N/A	N/A	N/A

* FOR ELCO PANELMATES ((2) 1/4" ø W/ 1 7/8" PENETRATION) USED AT SILL & SIDE BRACKETS FOR INSTALLATIONS INTO WOOD. SEE SCHEDULES # 1 & # 1A FOR SHUTTER SIZE.

** IN ANY CASE, MAXIMUM "W" & "L" VALUES W/ CORRESPONDING DESIGN LOADS SHALL NOT EXCEED MAXIMUM VALUES INDICATED ON SCHEDULES # 1 & 1A.

SCHEDULE # 3

MAXIMUM ANCHOR SPACING AT TOP FEMALE HINGES Ⓑ, Ⓒ, OR Ⓓ AS WELL AS SILL ANGLE Ⓠ AT BOTTOM (AS APPLICABLE) FOR INSTALLATIONS INTO POURED CONCRETE HEADERS AND SILL ***

DESIGN PRESSURE RATING (p. s. f.)	SINGLE & MULTIPLE UNITS
	TOP & BOTTOM TO CONCRETE
ALL PRESSURES COVERED IN SCHEDULE # 1 & # 1A	9" O. C.

*** SEE SHEETS 6 & 7 OF 8 FOR ANCHOR SPACING FOR INSTALLATIONS INTO WOOD FRAME BUILDINGS.

PRODUCT REVISED
as complying with the Florida Buiding Code
Acceptance No 03-0121.02
Expiration Date 07/01/2007
By Helena A. Molina
Miami Dade Product Control Division

F.B.C. (H.V.H.Z.)/ MIAMI-DADE COUNTY

APR 14 2003

TILTECO INC.
TILLIT TESTING & ENGINEERING COMPANY
6595 N.W. 36th. St., Ste. 217, VIRGINIA GARDENS, FLORIDA 33166
Phone : (305)871-1530 . Fax : (305)871-1531
EB-0006719
WALTER A. TILLIT Jr., P. E.
FLORIDA Lic. # 44167

ASSA / EXTRUDED BERTHA BAHAMA SHUTTER

SUNSHINE ALUMINUM SPECIALTIES, INC.
(A.S.S.A. # 12)
5420 MAULE WAY
WEST PALM BEACH, FL. 33407

REV. No	DESCRIPTION	DATE	REV. No	DESCRIPTION	DATE
1	OLD 99-163	–	3	–	–
2	–	–	4	–	–

AS SHOWN SCALE
1/7/03 DATE
03-002 DRAWING No
SHEET 8 OF 8